References

REFERENCE
BATTERIES AND BATTERY CHARGERS

Created by: G. Mayo
Revised by: B. Ropson
Reviewed by: G. Samms
Approved by: G. Samms

1: Specific Gravity Readings[1]

Full Charge Specific Gravity at 25°C (77°F)	
Type	**Specific Gravity**
Lead Acid (Antimony)	1.200 – 1.230
Lead Acid (Calcium)	1.200 – 1.230
Nickel Cadmium	1.150 – 1.200

The recommended specific gravity readings may vary for special applications (i.e. portable diesel generators and gas turbines).

Correction of Electrolyte Specific Gravity for Temperatures

When comparing specific gravity readings, allowances must be given for variations in the temperature of the electrolyte. For each 1.7°C in temperature of the electrolyte above 25°C, add one (.001) point in specific gravity to the actual hydrometer readings; and for each 1.7°C in temperature of the electrolyte below 25°C, subtract one (.001) point in specific gravity from the actual reading.

Example:

Specific Gravity Hydrometer Reading	Cell Temperature (°C)	Correction	Specific Gravity reading Corrected to 25°C
1.230	15	-0.006 points	1.224
1.225	20	-0.003 points	1.222
1.220	30	+0.003 points	1.223
1.215	35	+0.006 points	1.221

2: Float and Equalize Voltages

Proper Float and Equalize Cell Voltages		
	Float	**Equalize**
Lead Acid (Antimony)	2.15	2.33
Lead Acid (Calcium)	2.17	2.33
Lead Acid (Selenium)	2.23	2.23
Nickel Cadmium	1.43	1.55
Gelled Electrolyte	2.23	2.23
AGM	2.25-2.30	N/A

Batteries should be given an equalize charge monthly or as required for a period of 8 hours. Most of the chargers provide equalizing automatically.[2]

The manufacturer's instructions should be referred to for any specific procedures.

REFERENCE
BATTERIES AND BATTERY CHARGERS

3: Battery Temperature

High temperatures give some additional capacity but will reduce total battery life. Low temperatures reduce capacity but will prolong battery life under float operation.

The standard temperature used in rating battery performance is 25°C (77°F). The capacity of the battery will be reduced by 0.6% for each degree fahrenheit the electrolyte is below 77°F, and will increase by 0.6% for each degree above 77°F. Since our heating standards require the battery room temperature to be 15°C (59°F) minimum, the battery will be operating at 90% capacity. In addition, the specific gravity is increased as the temperature is lowered.

Since capacity and specific gravity are affected by temperature changes, correction factors are used for testing and test results (see MSR001-1).

4: Battery Terminal Torque and Re-Torque Requirements

The following table provides the torque and re-torques values for various battery types.

Manufacturer	**Description**	**Initial Torque** Inch-Pounds (Newton Meter)	**Re-Torque** Inch-Pounds (Newton Meter)
Exide	Bolt: ¼" diameter, 20 threads/inch	70-75 (8.0-8.5)	60-65 (7.0-7.5)
	Bolt: 5/16" diameter, 18 threads/inch	120-125 (13.5-14.0)	110-115 (12.5-13.0)
C&D	3DU-11	70 (8.0)	70 (8.0)

5: Current Limit Check on Battery Chargers

Instructions can usually be found in the manufacturer's manual for setting this limit. Hook the discharged battery bank back up and, with the spare set disconnected, observe the ammeter. The maximum current reading that is shown on the ammeter indicates the current limit setting. Staticon uses a ratio of 1.25 times the current rating on the nameplate. If the rating is not known, a ratio of 1.00 can be used.

6: De-Ionized Water

De-ionized water from a water purifier with the purity selector switch set at 1 mega-ohm (1 mega-ohm/cm) or higher, is to be used when it is required to add water to the cells.

[1] - Not applicable to Lead Acid Gelled Electrolyte or AGM.
[2] - Turn off the equalize cycle on Gelled Electrolyte banks and AGM banks.

ProActiv Software Instructions

Used for BITE and Digital Hydrometer

Newfoundland Power

Created by: Jonathan Barry
Date Created: June 14, 2005
Revised by: Mike Murphy
Date Revised: February 28, 2007

Table of Contents

Table of Contents 2
Overview 3
Quick Reference Downloading Steps 4
Section 1 - Installing ProActiv Software 5
Section 2 - Setting Up ProActiv 6
Section 3 - Connecting BITE to Computer 7
Section 4 - Downloading from BITE 9
Section 5 - Connecting Digital Hydrometer to Computer 11
Section 6 - Downloading From Digital Hydrometer 12
Section 7 – General ProActiv Use 14
Viewing Downloaded Tests 14
Adding a Battery Bank 15
Deleting a Battery Bank 17
Synchronizing the Master and Replica Database 18

Overview

The ProActiv program is used to retrieve, organize, and view results from battery bank tests. The software supports two devices that are used for battery testing at Newfoundland Power, the Digital Hydrometer and the Battery Impedance Tester (BITE). Each device can be connected to a computer through a serial port and its test results uploaded to the programs database.

ProActiv uses a Microsoft Access database to store its information. Through this database, the battery bank information and test results are organized and updated. There are currently two databases used by Newfoundland Power, one master and one replica. The master database is stored in the following directory:

\\Nphome1\Maintenance\Substation Maintenance\Battery Proactiv Database\Master Database\NF Power ProActiv.mdb

The master database is for use by all employees outside the St. John's region. Test equipment will be connected to a computer on the Newfoundland Power network and result can be uploaded directly to this database through ProActiv.

A replica database (which should only be used when not connected to the network) also exists on the hard drive of the Newfoundland Power laptop currently designated for battery impedance testing, in a folder called *Battery Database*. This laptop is located at the Electrical Maintenance Centre on Topsail Road. This laptop allows results to be retrieved from test equipment in locations where no network connection is available. This eliminates the need to return to an office to download tests once the testing equipment is full.

Quick Reference Downloading Steps

1) Install ProActiv Software. If software is already on computer then this step may be omitted.

2) Set up ProActiv Software by linking it to the proper master database

3) Connect BITE or Digital Hydrometer to computer through the serial port. These instructions can be found in Section 2 and Section 4 respectively.

4) Place ProActiv in waiting mode and turn on the device. The transfer should begin.

5) Once the transfer is complete, name the tests appropriately and save. Detailed downloading instructions can be found in Section 3 and Section 5 respectively.

6) Close and Reopen ProActiv. Review test results using the software assuring that all data is correct.

7) Once data confirmed accurate, delete data from "Bite Gun". **Note that once this is done, if data was not downloaded into software, it will be lost forever. If data is downloaded into wrong location, it must be re-downloaded into correct location before it is deleted. Data cannot be moved once it is downloaded (it can only be re-entered manually)**

Section 1 - Installing ProActiv Software

Note: This section is only needed if the ProActiv software is not already installed on the computer being used. The Battery Impedance Laptop already has it installed.

To install the ProActiv software, perform the following steps:

1) Open Battery ProActiv Folder
\\Nphome1\Maintenance\Substation Maintenance\Battery Proactiv Database

2) Double click on the **setup.exe** icon

3) Follow the step-by-step setup instructions to install the ProActiv software on your PC.

4) When setup is complete, open the ProActiv software by clicking on the ProActiv shortcut icon which should be on the desktop

Section 2 - Setting Up ProActiv

Note: Before ProActiv can be used, it must be linked to the proper master database. To do this, follow the following directions:

1) When first installed, the software is linked to a default database; this will have to be changed to the Newfoundland Power database. Each user will have to change this default setting when he/she logs in the first time at a particular machine. For example, if you download tests using a different computer than the last time you downloaded test results, the database path will have to be set again.

2) Click on **File**, select **System Settings**

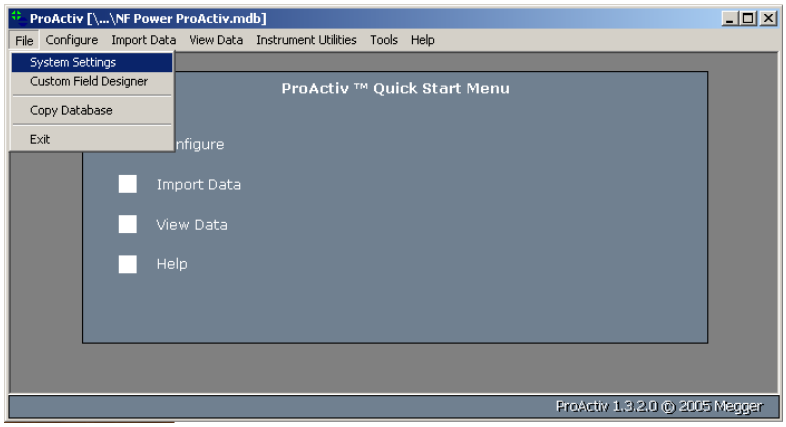

3) Replace the default database path by Copying and Pasting the following path into the Database Path

\\Nphome1\Maintenance\Substation Maintenance\Battery Proactiv Database\Master Database\NF Power ProActiv.mdb

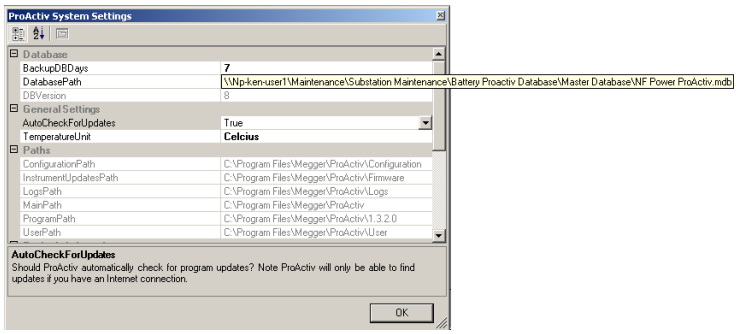

4) Click O.K. Set-up is now complete and ProActiv is now linked to the Newfoundland Power Master Battery Database.

5) This can be verified by viewing old arbitrary NP test results.

Section 3 - Connecting BITE to Computer

In order to connect the BITE to the computer the following equipment will be needed:

1) BITE "Gun"

2) BITE Serial Adapter (found inside BITE case)

3) Serial Extension Cable

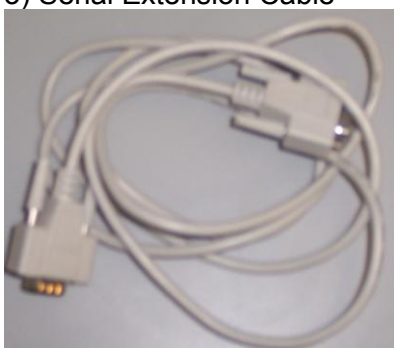

Note: The serial extension cable is usually only needed if using a Newfoundland Power laptop. The BITE Serial Adapter's shape will not allow it to fit on certain serial connections. In this case the extension is needed. These extensions can be purchased at any store with an electronics department (Wal-Mart, Zellers, Radio Shack, etc.)

Perform the following steps to connect the BITE tester:

1) Connect the BITE Serial Adapter to the serial port at the rear of the computer. The serial port is highlighted in the picture below. Please note that it will not be found in the exact same location on every computer.

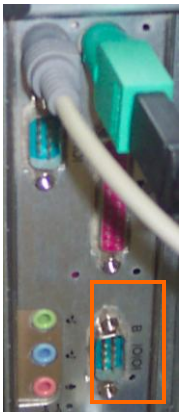

Once again please note that if the BITE Serial Adapter will not fit on the computer's serial port you will need to use a serial extension cable.

2) Once connected to the serial port you can connect the opposite end of the cable to the BITE.

At this point you can move onto the next step and download the test results into Proactiv.

Section 4 - Downloading from BITE

1) Open ProActiv software

2) Click on **Import Data**, click on **Import from Instrument**, and click on **BITE**

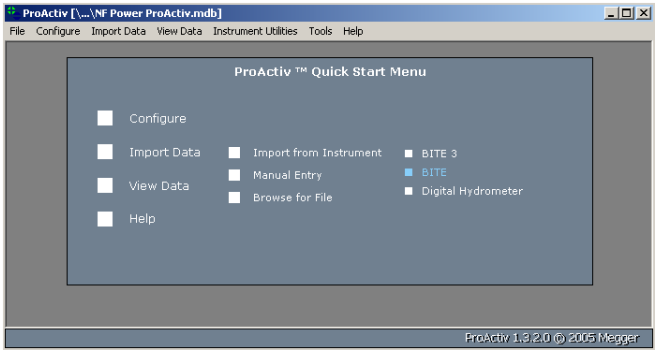

3) Click **Next** once to proceed to step 2. The program is now waiting to accept test results.

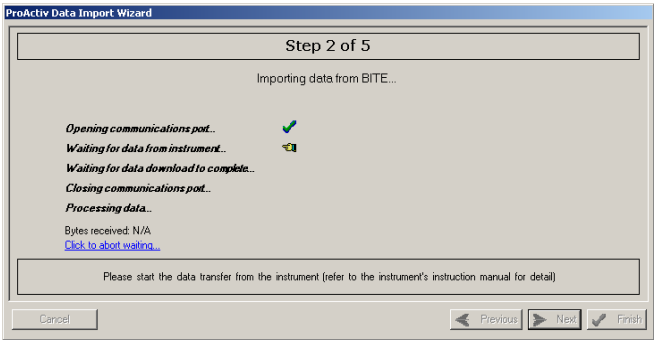

4) Turn the BITE on. Select **EXPORT_DATA**, select **EBITE/PC**, select **PC**. The transfer should begin.

5) When transfer is complete, the program will proceed to step 3. Select the checkbox for the results you wish to download. For each set, enter the Test Date, Customer (Substation Asset Group), Region, Site, and String. When all information is selected, click **Next** to move to step 4.

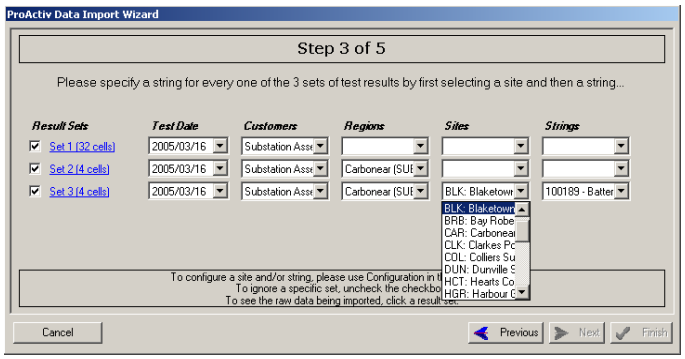

6) Select the checkbox for each result set to be saved. If Configuration Integrity is marked with a red 'X', click on the appropriate Result Set link (for example, click on "Set 1 (60 cells)" which is highlighted in blue). This will show you the error which caused the failed Configuration Integrity test.
   a. If you are trying to download for example, 61 cells into a string which has been configured to take only 60, you can click on **(Create)** to create the extra required cells that are required for your download.
   b. However, if you are trying to download for example, 59 cells into a string which has been configured to take 60 or more, you can simply select the save checkbox to override this error (Note that in this case, the Create link is not clickable).
   c. Click **Next** to move to step 5 and verify that all data was saved successfully. Then click **Finish**.

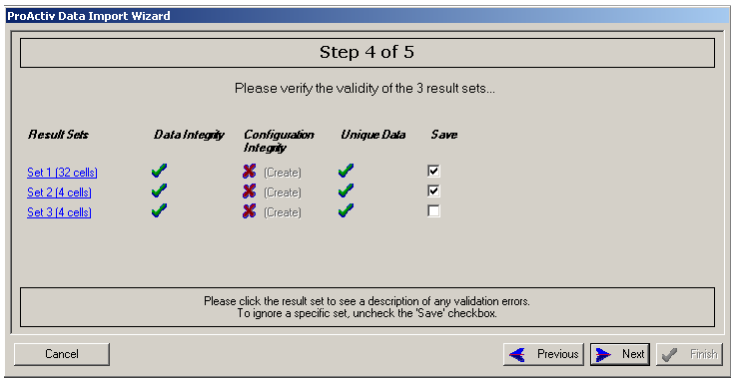

7) Once all data has been downloaded into the database. Close down ProActiv by clicking the 'X' in the upper right corner.

8) Re-open ProActiv and view the data which has been downloaded in the previous sections. Once this data is confirmed to be satisfactory, Delete the unneeded tests from the "Bite Gun". **Note that once this is done, if data was not downloaded into software, it will be lost forever. If data is downloaded into wrong location, it must be re-downloaded into correct location before it is deleted. Data cannot be moved once it is downloaded (it can only be re-entered manually).**

Section 5 - Connecting Digital Hydrometer to Computer

Similar to the BITE, the Digital Hydrometer is connected through the computer's serial port.

In order to connect the Digital Hydrometer to the computer you will need the Hydrometer itself and its serial adapter. They should both be found within the Hydrometers case.

Perform the following steps to connect the Digital Hydrometer:

1) Connect the Digital Hydrometer's Serial Adapter to the serial port at the rear of the computer. The serial port is highlighted in the picture below. Please note that it will not be found in the exact same location on every computer.

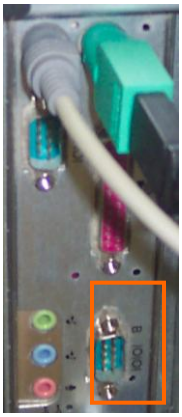

Pease note that if the Digital Hydrometer's serial adapter will not fit on the computer's serial port you will need to use a serial extension cable, as outlined in the instructions for connecting the BITE.

2) Once connected to the serial port you can connect the opposite end of the cable to the Digital Hydrometer as seen below.

At this point you can move onto the next step and download the test results into Proactiv.

Section 6 - Downloading From Digital Hydrometer

1) Open ProActiv software

2) On the Digital Hydrometer, turn on the data logger (this is the block on the left side of the Hydrometer).

3) Click on **Import Data**, click on **Import from Instrument**, and click on **Digital Hydrometer**

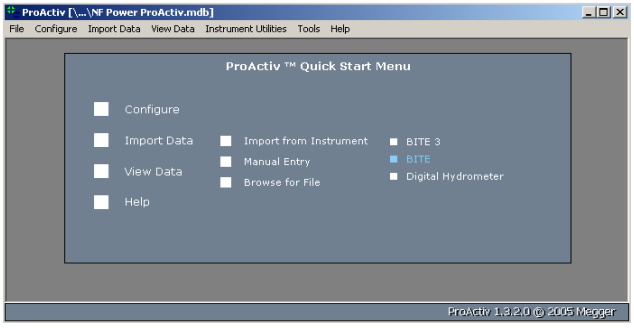

4) Click **Next** once to proceed to step 2

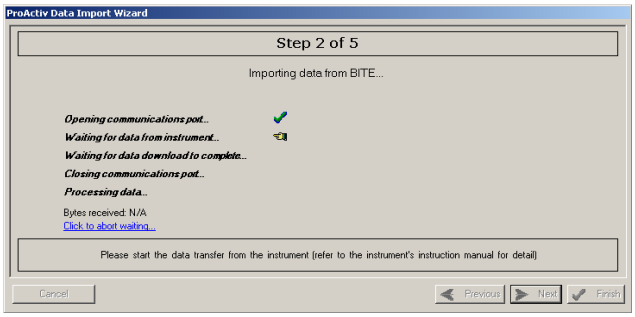

The program should begin to download results from the hydrometer. When transfer is complete, the program will proceed to step 3.

5) Select the checkbox for the results you wish to download. For each set, enter the Test Date, Customer (Substation Asset Group), Region, Site, and String. When all information is selected, click **Next** to move to step 4.

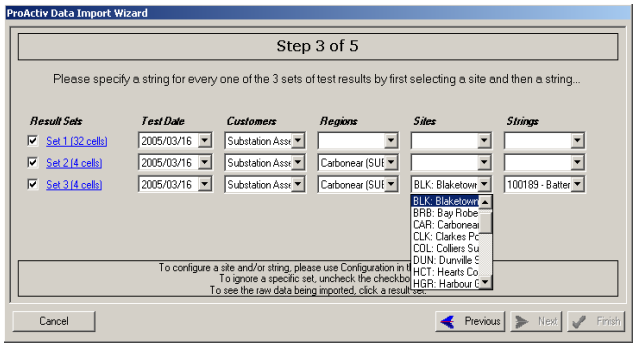

6) Select the checkbox for each result set to be saved. If Configuration Integrity is marked with a red 'X', click on the appropriate Result Set link (for example, click on "Set 1 (60 cells)" which is highlighted in blue). This will show you the error which caused the failed Configuration Integrity test.
   a. If you are trying to download for example, 61 cells into a string which has been configured to take only 60, you can click on **(Create)** to create the extra required cells that are required for your download.
   b. However, if you are trying to download for example, 59 cells into a string which has been configured to take 60 or more, you can simply select the save checkbox to override this error (Note that in this case, the Create link is not clickable).
   c. Click **Next** to move to step 5 and verify that all data was saved successfully. Then click **Finish**.

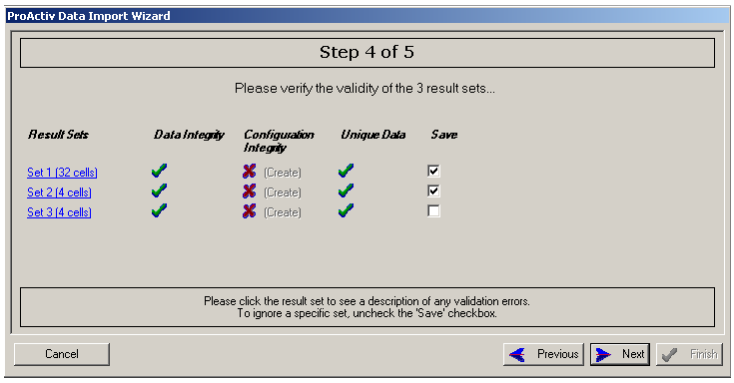

7) Once all data has been downloaded into the database. Close down ProActiv by clicking the 'X' in the upper right corner. This is done to avoid glitches and bugs currently present in the software.

8) Re-open ProActiv and view the data which has been downloaded in the previous sections. Note that the Hydrometer's data should now be logged in ProActiv. However, the specific gravity test results and impedance test results will be stored as a different test within ProActiv. This is a software limitation which should be fixed in the future.

9) Once this data is confirmed to be satisfactory, delete the unneeded tests from the Hydrometer's Data Logger. **Note that once this is done, if data was not downloaded into software, it will be lost forever. If data is downloaded into wrong location, it must be re-downloaded into correct location before it is deleted. Data cannot be moved once it is downloaded (it can only be re-entered manually).**

Section 7 – General ProActiv Use

Viewing Downloaded Tests

Once the tests from the BITE and Digital Hydrometer are downloaded to the computer they can be viewed using ProActiv. If tests have been downloaded it is recommended that ProActiv be restarted before viewing any tests. Once ProActiv is closed it can be it can be reopened and the following steps can be followed:

1) Click on **View Data**, then **View Data & Graphs**

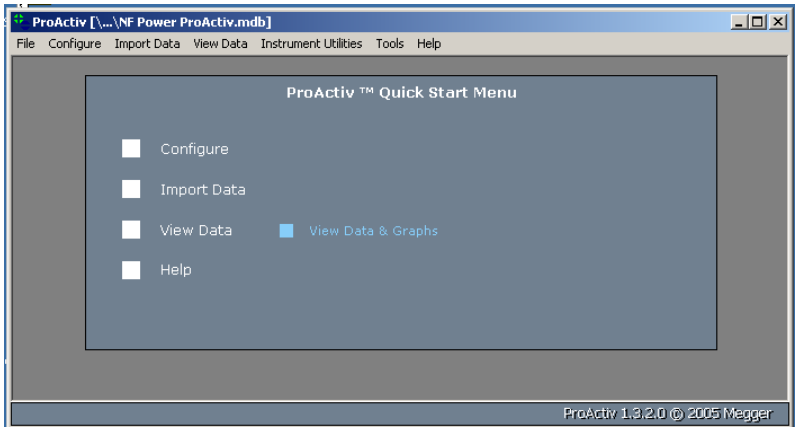

2) The next screen will appear as is below.

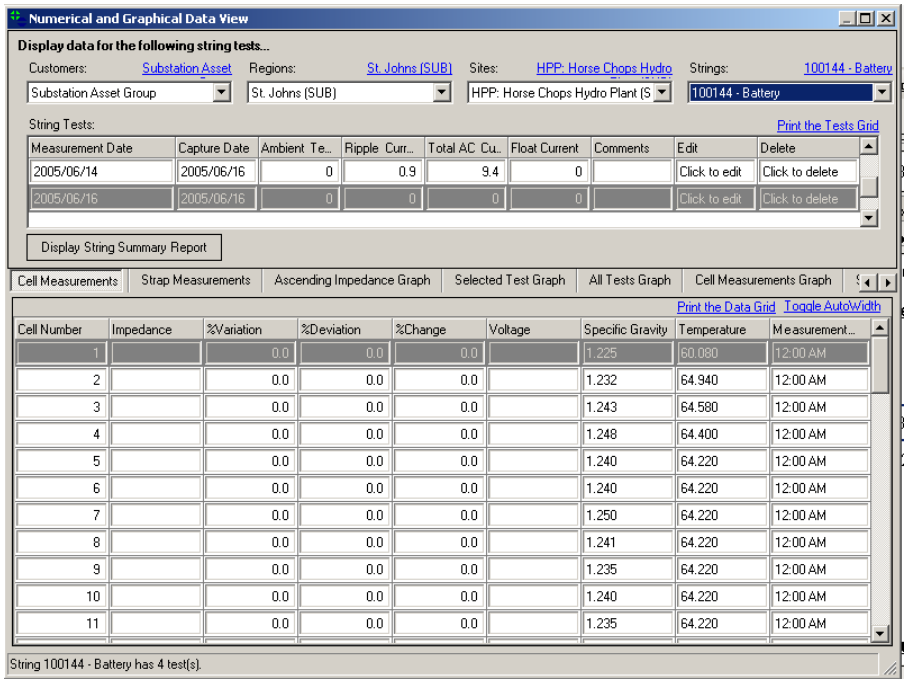

Here the **Customers** field will always be designated at "Substation Asset Group" as it is the only possible selection for that field. The **Region** and **Substation** fields can be selected simply by clicking on the drop down box and then selecting the Region/Substation that the batteries you wish to view are contained in. Then you can select the particular battery bank of interest by clicking the **Strings** drop down box. If the battery bank of interest does not appear then there have been no tests downloaded and the bank needs to be added to the database. Instructions on how to add batteries can be found in the next sub-section.

Adding a Battery Bank

As mentioned in the previous section, if you wish to upload data to ProActiv and the battery bank is not present it will need to be added. This can be done by following the proceeding steps.

1) Open the main ProActiv menu. Click **Configure**, then **Sites & String**, then **Sites.**

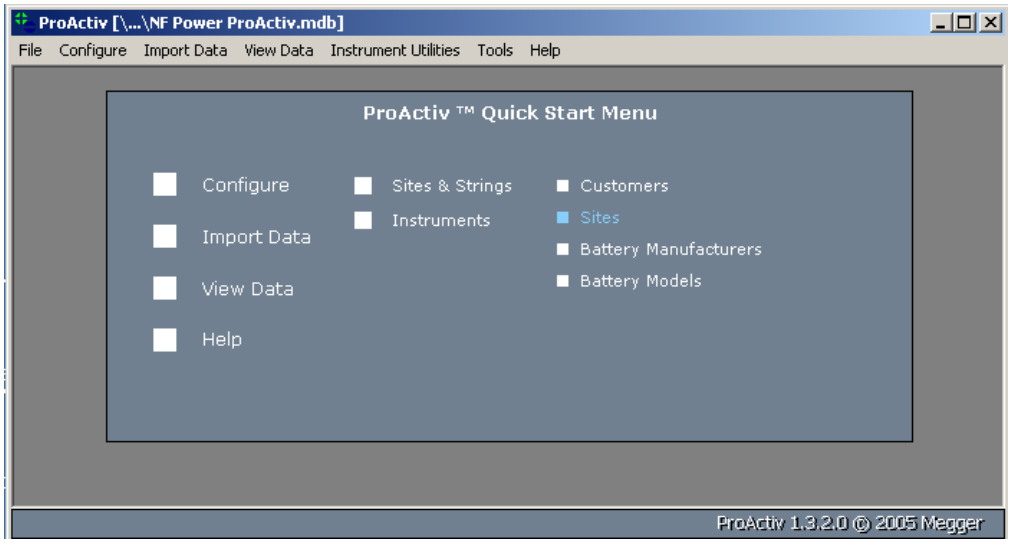

2) The next screen will display all of the sites that have been configured for ProActiv.

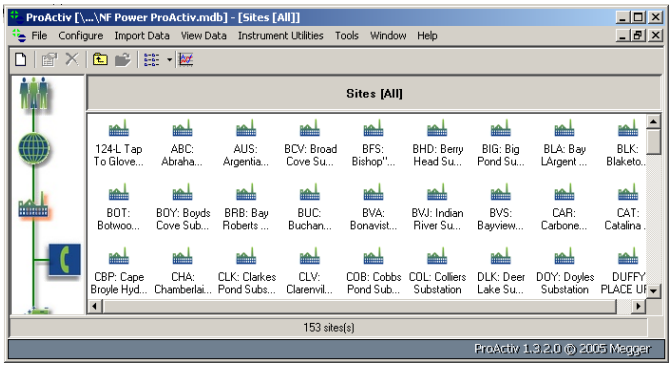

As of the time this document was written all the existing sites have been configured for ProActiv therefore adding a site will not be covered in this manual.

3) From the current screen, double click on the substation of interest.

Right click anywhere on the next screen and then select **New**.

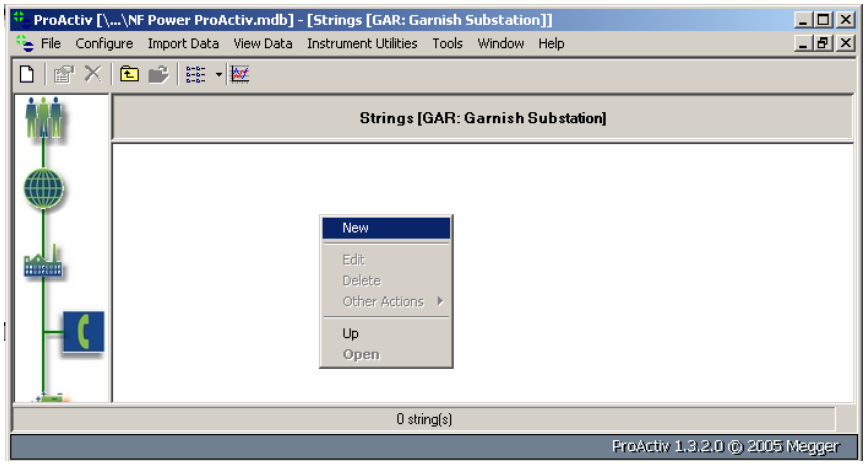

4) This will then prompt you for the string information. The name is the only string information that is required. Batteries should be named as per their company number. For example, the naming convention for a battery with Newfoundland Power company number 100000 would follow the naming convention “100000 – Battery”.

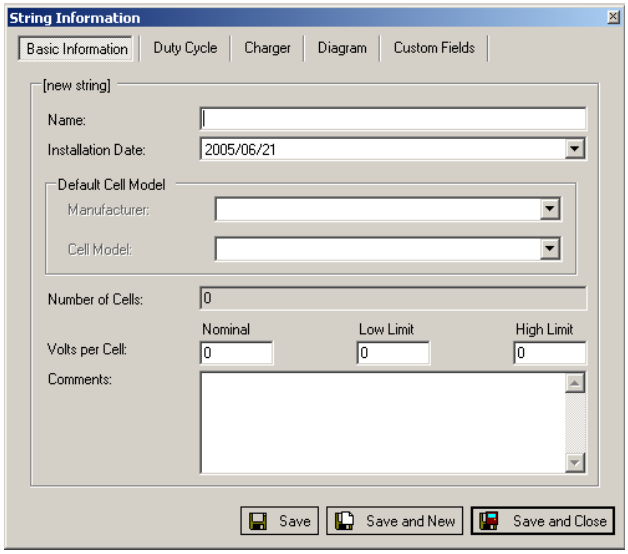

Once the battery bank is configured the cells will automatically generate once the first download is complete.

Deleting a Battery Bank

1) Open the main ProActiv menu. Click **Configure**, then **Sites & String**, then **Sites.**

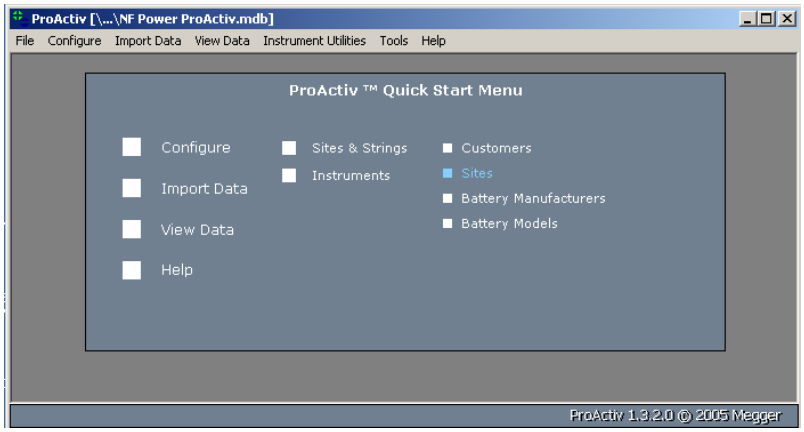

2) The next screen will display all of the sites that have been configured for ProActiv.

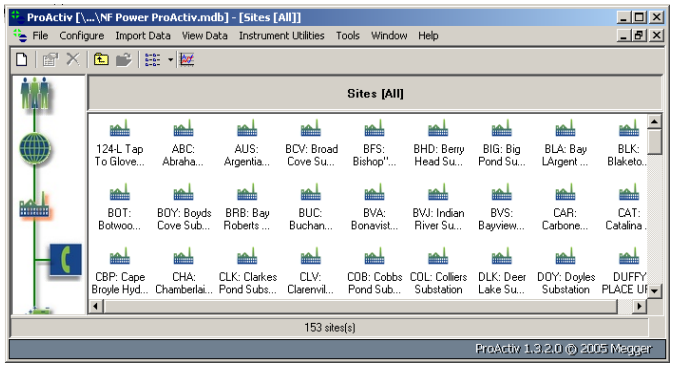

3) From the current screen, double click on the substation of interest. Right click the battery bank you wish to delete and then click **Delete**. A prompt will appear asking you if you wish to delete all cells, straps and data. Click **Yes**. The bank is now deleted.

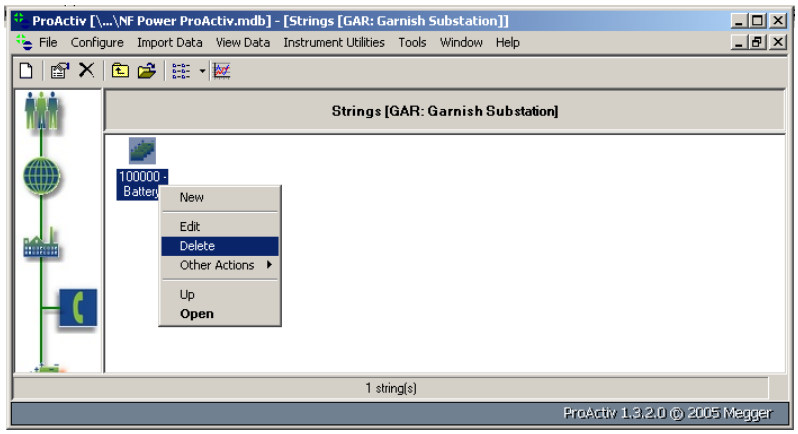

Synchronizing the Master and Replica Database

Note: This section should only be completed by those who are very familiar with the program and its operation. Please call Jeff Coady @ 737-5384 if you must proceed with this section.

This section is only necessary if the results that you wish to download are stored on a laptop computer using the local/replica database. If this is the case, the results stored on the laptop must be transferred to the main database which is located on the network.

After new results are stored on either of the two databases, all information can be transferred between both using a synchronization procedure. This can only be done using Microsoft Access, and must be done on the laptop while it is connected to the NF Power network.

To synchronize the master and replica database perform the following steps:

1) Open the replica database on the hard drive on the laptop in Microsoft Access.

2) Select 'Tools' – 'Replication' – 'Synchronize Now' from the menu bar.

3) The user is then asked to enter the second database with which to synchronize. The master database located in the maintenance directory on the network should appear as a default. If not, select the master database from the path:

\\Nphome1\Maintenance\Substation Maintenance\Battery Proactiv Database\Master Database\NF Power ProActiv.mdb

Performing the synchronization will transfer all changes in the replica to the master, and all changes in the master to the replica. This will make both databases identical and updated with the most recent test results from all areas.

REFERENCE
BUSHINGS

Created by: M. Rideout
Revised by: B. Ropson
Reviewed by: G. Samms
Approved by: G. Samms

MSR002-1: Bushing Condition

The following descriptions are used for reporting bushing condition:

Good - Free from contamination, cracks, chipped skirts, etc. No repairs required.

Fair - Requires cleaning and possibility of replacing at next Maintenance IV.

Bad - Change immediately or as soon as possible.

MSR002-2: Types of Bushings

The manufacturer's instruction literature covers all aspects of application, construction and maintenance of the different types of bushings.

Bushing manufacturers have several different bushing type designations. Some bushings are oil filled and some are of a dry construction. Bushings are usually made of porcelain, but some are made of epoxy (e.g. those on Westinghouse SF6 gas breakers).

MSR002-3: Handling and Storage

Bushings should be handled with great care to avoid breakage or the entrance of moisture. Porcelain is very easily broken when hit by a hard object.

Because of the weight and dimensions of the larger bushings, lifting eyes are provided and should be used when lifting the bushing.

As soon as a busing is received, it should be examined for damage arising from shipment. With the bushing temperature at 20-25°C, the oil level gauge should read "normal". Examine the surface for small breaks or cracks which might cause leakage later, but which are not yet affecting the oil level reading.

Bushings of the dry construction type can be handled and stored in any position for any period of time without deterioration of bushing quality.

Oil filled bushings should never be laid horizontally. The top of the bushing should be kept at least 305 millimeters (1 ft) higher than the bottom, so as to keep the core insulation below oil level. When stored for extended periods, the bushing should be kept in the vertical position.

REFERENCE
BUSHINGS

MSR002-4: Bushing Maintenance

Bushings should be examined closely for hairline cracks, broken skirts, and oil leaks. In oil-filled bushings, a check should be made for leaks around metal flanges, fittings, and the solder seal at the bottom of some bushings (such as the Westinghouse Type OSF condenser bushing). The oil level, as indicated by the gauge, should be checked and the porcelain should be kept clean.

Some bushings are prone to leakage around the area where the cap is fastened to the porcelain, and also where the porcelain is fastened to the mounting flange. These bushings usually have to be replaced and returned to the factory for repairs. A check should be made to ensure that there is no excessive strain caused by personnel exerting excessive force when tightening bolts on bushing caps when connecting conductors to the bushings.

Bushings with one or more skirts broken off may continue in service, but, because of the reduced creepage distance from line to ground and the reduced impulse level, it is advisable to replace the bushing to prevent possible flash-over due to moisture or contamination. The application of Glyptal on exposed surfaces of porcelain, where small chips have been removed from skirts of bushings, is not recommended. Glyptal will not increase the insulating value of the bushing. The only value in applying Glyptal would be in determining if future damage occurs in the future, but, in most cases, the cost of the manpower and outages involved in it's application outweighs the benefit.

Some bushings are provided with a test plug for making power factor tests. Power factor measurements should be made as required. It is especially desirable to measure the power factor on bushings that have been in storage for a long time.

Epoxy SF6 gas insulated bushings can usually have any chipping or cracking repaired with a patch kit supplied by the manufacturer. The epoxy used in these bushings has the characteristic of naturally "chalking" on the surface, which provides for self-cleaning by natural rainfall.

General maintenance of bushings consists of cleaning all exposed surfaces, checking for cracks and chipped surfaces, and checking the oil level. Bushings that are exposed to salt spray, dust and any abnormal deposits are subject to a special hazard and should be cleaned regularly to prevent flashover.

In some cases, as in the replacement of gauges and adding oil, it is possible to make repairs in the field. Specific instructions should be obtained from the manufacturer's literature. In some cases bushings have to be returned to the factory because of the special equipment required to make the repairs.

REFERENCE
MINIMUM TRIP AND CLOSE VOLTAGES

Created by: M. Rideout
Revised by: B. Chubbs
Reviewed by: G. Samms
Approved by: G. Samms

MSR003-1: Minimum Trip and Close Voltages

A circuit breaker should be capable of a normal trip operation at less than full operating voltage.

A normal trip operation should be possible at approximately 70 volts on a 125- volt system.

Some circuit breakers require full operating voltage for a normal close operation, while some will close with slightly less than full voltage. Refer to the manufacturer's instructions for the minimum voltage required for a normal close operation for a specific breaker.

SWITCHGEAR

INSTRUCTIONS

OIL-BLAST CIRCUIT BREAKERS

TYPES KSO 14.4 KV TO KSO 69 KV

I-924-13-56

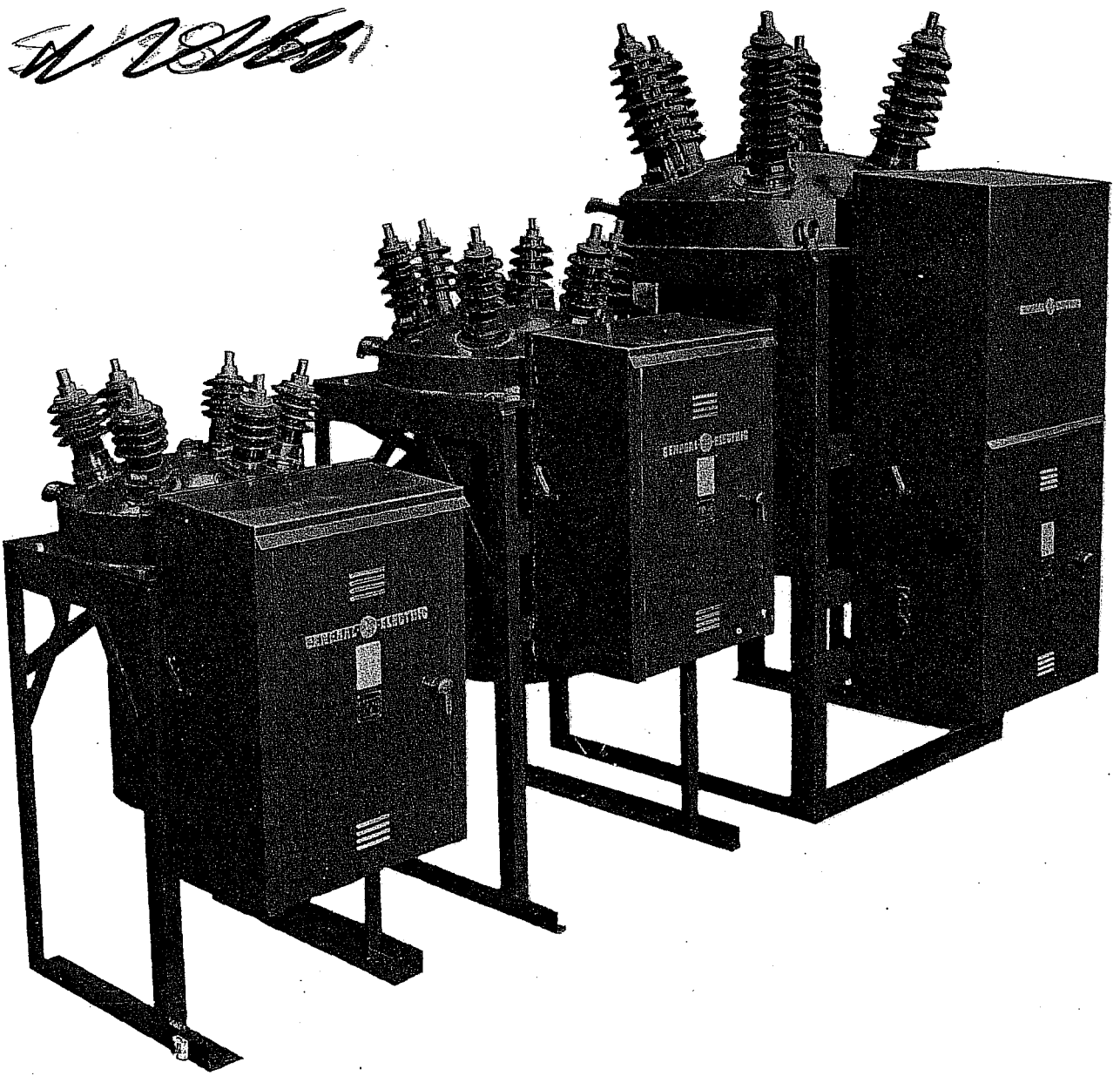

CANADIAN GENERAL ELECTRIC COMPANY LIMITED

PETERBOROUGH, ONTARIO

CONTENTS

INTRODUCTION 4
RECEIVING, HANDLING & STORAGE . . . . . .
Shipment 5
Unpacking 5
Storage 5
INSTALLATION . . . . . .
Location 5
Mounting 5
Connections 5
Control & Secondary Wiring 5
Grounding 6
ADJUSTMENTS 6
OIL 6
BREAKER ANALYSER CHARTS 6
FINAL INSTALLATION INSPECTION 7
BREAKER GENERAL 7
Venting 8
Tank Lifter 8
Contacts 8
Contact Assembly 8
Operating & Maintenance 8
Preparation of Gaskets 9
RENEWAL PARTS 10

Data Subject to change without notice.

General Information

These instructions do not purport to cover all details or variations in equipment nor to provide for every possible contingency to be met in connection with installation, operation or maintenance. Should information be desired or should particular problems arise which are not covered sufficiently for the purchaser's purposes, the matter should be referred to the Canadian General Electric Company.

INTRODUCTION

These breakers are of the most modern design, incorporating the oil blast principle of arc interruption. The fast breaker interrupting time means less system disturbance because of a quicker clearing of the fault. The shorter arc length means lower maintenance because of reduced contact burning and oil deterioration.

These instructions apply to outdoor breakers rated 14,400 volts to 69,000 volts and with interrupting capacities as designated on the breaker nameplate.

An oil circuit breaker is a very important unit in the modern transmission system, being depended upon for protection and flexibility of control. They may be used at any altitude up to 10,000 ft. if the proper bushings are selected. The operating mechanism is installed in a weather-tight housing attached to the circuit breaker framework, and its door provides accessability to all control parts. The breaker should not be installed in places where it will be called upon to operate at voltages or currents greater than those given on the nameplate. The short circuit conditions imposed should not exceed the breaker rating.

Proper installation and maintenance are necessary to insure continued satisfactory operation of the breaker. Section 19 of the Standard of the A.I.E.E., and the N.E.M.A. Switchgear Standard published by the National Electrical Manufacturers' Association, in addition to these instructions, are recommended for reference on the installation and use of the oil circuit breakers.

RECEIVING, HANDLING AND STORAGE

Shipment

All breakers are assembled and tested completely at the factory. They are shipped assembled in as completed units as handling and transportation facilities will permit. Each breaker is carefully inspected and packed by workmen experienced in the proper handling and packing of electrical equipment. Immediately upon receipt of a breaker an examination should be made for any damage sustained in transit. If injury or rough handling is evident, a damage claim should be filed at once with the transportation Company and notification made promptly to the nearest Canadian General Electric Sales Office.

Unpacking

For shipment to certain locations it will be necessary to remove the bushings and interrupters.

When unpacking, the crating and boxing must be removed carefully. The bushing porcelains and other parts are sometimes damaged by the careless handling of uncrating tools.

Storage

When the breaker can be set up immediately in its permanent location and filled with oil, it is advisable to do so, even though it may not be put in service for some time. The oil tanks should be cleaned and dried before they are filled with oil. The protective crating should not be taken from the bushings until the breaker has reached its permanent location and all overhead work completed.

If stored outdoors, the breaker parts which are not weather-proof should be thoroughly covered to protect them from the weather. Machined parts of the operating mechanism etc., should be slushed to prevent rusting and if the breaker is stored for any length of time it should be inspected periodically to see that rusting has not started and to insure good mechanical condition.

Particular care should be taken to protect insulation parts which might absorb moisture. It is necessary that these parts be stored in a dry room.

INSTALLATION

The installation of the breaker will be facilitated by a study of these instructions and a review of the approved drawings which supplement these instructions. The drawings show the general arrangement, dimensions, location of foundation bolts, provision for conduit connection, electrical connections and other information necessary for the proper installation of the breaker. The approved drawings consist of a requisition summary, outline of the breaker, and the diagram of connections.

Location

The breaker should be located so that it will be readily accessible for cleaning and inspection. It is important that sufficient space be provided for operation of the maintenance closing device. Where flood conditions exist, the mechanism housing should be above high water level.

Mounting

The total weight of the breaker with oil is given on the outline drawing and on the nameplate. This information will serve as a guide to the strength of the lifting means required for handling the breaker. It may be lifted by hooking into the framework. When cable slings are used, the slings must not strike the bushings, as any undue strain may cause them to crack or break.

Connections

After the breaker has been located and foundation bolts secured, electrical connections can be made. Before making these, every precaution must be made to see that all leads to be connected to the breaker are dead.

Leads should be brought down from above if possible. Ample electrical clearance must be provided between leads and parts of the station, such as walls, channels, and framework. Leads should be properly supported so as not to put any unusual strain on the bushings. The bushing should not carry any cable or bus strains. To avoid overheating, the connecting leads must be of current carrying capacity at least equal to the maximum operating current of the circuit which should not exceed the breaker rating.

Connections to the breaker are made by bolted connectors fastened to the end of the bushings. The bolts on the terminal connectors must be securely tightened to ensure good contact. All contacts must be clean, bright and free from dents or burrs.

Control and Secondary Wiring

All control wires should be run in conduit insofar as it is practicable. Control wires must be run separately and remote from high tension leads and must not be run in the same duct or parallel to the high tension leads unless the distance separating them is sufficient to prevent possible communication in the vent of a short circuit. Control wiring of adequate size should be used so that with full operating current

supplied to the control circuit, voltage across the mechanism terminals is within the limits specified as standard for the range of control voltage.

Grounding

The framework of each breaker should be permanently grounded. The usual practice is to connect a heavy cable from framework to ground, a bolted connector being supplied for this purpose. The cable should be able to carry 25% of rated current of the breaker but should not be smaller than #4/0.

A good permanent low resistance ground is essential for adequate protection. A poor ground gives a false feeling of safety to those working around the breaker and may result in ultimate loss of life or damage to the equipment.

ADJUSTMENTS

Note:

Before making any changes or adjustments to the breaker read carefully the factory electrical and mechanical inspection sheets pertaining by serial number to the breaker in question.

Although the breaker has been completely set up, adjusted and tested at the factory, it is suggested that all adjustments be reviewed to see that no change has occured during shipment and installation. Manual operation should be used for all preliminary inspections. The breaker should be operated by hand to see that it is smooth throughout the closing and opening strokes, that no binding occurs and that no excessive play is noticeable between parts. Electrical operation should only be attempted after it is certain all adjustments are made correctly.

The adjustments of the operating mechanism are not included and instructions for the particular operating mechanism used should be referred to for details.

With the tank-lifter the tank can be lowered leaving the contacts and breaker mechanism accessible for inspection. *The trip latch of the operating mechanism is wired in place during SHIPMENT AND THIS WIRE MUST BE REMOVED BEFORE INSPECTION.* All wire and blocks used to hold parts in place during shipment must be removed before breaker is tripped open.

OIL

The specific high speed performance of the modern oil blast breaker is dependent upon the uses, in the breaker, of oil having the proper characteristics and refined under a controlled method by a reliable refiner to meet fully the rigid Specifications of the Canadian General Electric Company. A high dielectric strength is necessary to meet insulation requirements. A low freezing point is required for successful operation when installed in locations subject to freezing temperaturs. High resistance to carbonization minimizes the sludge and carbon deposits which reduce the dielectric strength and cooling effect of the oil. It is very important that the oil be free of all moisture as the presence of one tenth of one percent may reduce its puncturing resistance by fifty percent.

Before final adjustments are made the oil tank should be filled with GE #10C oil. Precautions must be taken to insure absolute dryness and cleanliness of the apparatus before filling and to prevent the entrance of water and dirt during transfer of oil to the tank. Customers desiring detailed information on equipment and procedure for filtering G.E. #10-C oil should obtain Bulletin GEA-1130A from the nearest CGE Sales Office. Before filling with oil, all accessories such as valves and gauges must be oil tight. The threads should be covered with glyptal or equivalent. Plugs are furnished for the outlet side of the drain valves and should be used to prevent any leakage should the valve seats become damaged from use. The normal oil level is indicated by the oil gauge and may vary from minimum to maximum, but should never drop below the visible portion of the glass.

While the oil is shipped in sealed containers, careless handling during shipment or storage may result in absorption of moisture by the oil. All new oil should be tested before being placed in the oil circuit breaker. The dielectric strength of the oil when shipped is at least 22,000 volts when tested in a standard gap with 1" disc terminals 0.1" apart. New oil of less than standard dielectric strength (22,000 volts) should not be put in the breaker tank until its insulating value has been brought up to standard, (by filtering or otherwise).

In filling, care must be taken so that moisture will not be absorbed by the oil. When cold drums are brought into a warm place they must be left standing until condensation has disappeared and drums are thoroughly dry. If the installation is outdoors the preparation and filling must be done on a clear dry day or adequate protection of some kind provided against moisture being absorbed.

Metal or oil proof rubber hose must be used because oil dissolves the sulphur in ordinary rubber hose, this condition being undesirable as the sulphur attacks the copper in contacts, etc.

BREAKER ANALYSER CHARTS

When all breaker adjustments have been made, the bearing surfaces of the mechanism properly lubricated and the tank filled with oil, the breaker may be operated.

A travel analyser may be attached to the breaker to obtain an accurate travel record of breaker performance. The removable operating rod of the analyser screws into the top of the breaker crosshead, access through the dome being obtained with a removable pipe plug inserted for this purpose. A #10-24 hole is drilled in the crosshead to receive analyser rod.

Representative travel curves of opening, closing and trip free operations are illustrated in Fig. 1. It should not be necessary to make any adjustments to come within the limits shown. Any variation from the limits given in Table 1 should be reported to the nearest Canadian General Electric Sales Office.

FINAL INSTALLATION INSPECTION
(See Table 1)

After the oil circuit breaker has been installed with all mechanical and electrical connections completed, the following tests and inspections should be made. Reference should be made to the electrical and mechanical inspection sheets supplied with each breaker.

1. See that the breaker is properly set up and levelled on its foundation.

2. Close the breaker by hand and check the following points:

   (a) Interrupter port alignment—Figure 2.

   (b) Contact alignment.

   (c) Minimum clearance between blade and bottom of interrupter.

   (d) Stroke (inspection sheet).

   (e) Clearance for all moving parts; connecting pipes, etc.

   (f) Distance between top plate and crosshead. (See Inspection Sheet).

3. See that all nuts, bolts, washers, cotter pins, and terminal connections are in place and tightened.

4. Inspect and test all insulated wiring to see that no damage, possible grounds or short circuits have occured during installation.

5. See that all bearing surfaces of the breaker operating mechanism have been properly lubricated.

6. See that the tank is filled with oil to the proper level.

7. Operate breaker electrically and check.

   (a) Operating times—

      1. Closing time from closing impulse till contacts touch.

      2. Opening time from tripping impulse till contacts Part.

      3. Trip free time from contacts touch till contacts part on trip free operation.

      Refer Figure 1, Analyser Chart, and Table 1.

   (b) Rebound (Maximum of 5% of stroke).

8. See that current carrying parts connected to the bushings are correctly installed according to standard practice and that all joints, whether made with bar or cable, are made correctly.

9. See that all covers and bolted connections are securely tightened and that all pipe plugs for inspection openings are tightened and glyptalled so as to prevent the entrance of moisture.

10. See that all points where the surface of the paint has been damaged during shipping and installation are repainted immediately.

BREAKER GENERAL

The oil circuit breaker is composed of the solenoid mechanism and house, top frame and dome, bushings, stationary and moving contacts, and the breaker mechanism which transmits motion from the solenoid to the moving contacts.

The top frame supports the bushings, bushing current transformers, breaker mechanism and the removable tank. Figure 3 is a plan view of the dome and shows the relative position of bushing current transformers and bushing current transformer leads with respect to the mechanism. The transformer leads are brought out to the terminal blocks in the housing, making them easily accessible for connecting to meters and protective devices.

Figure 4 shows the linkage involved in transmitting the vertical travel of the solenoid to the breaker lift rod (Fig. 4-6). On a closing operation the coupling 22 is pulled down, rotates the bellcrank and gives vertical motion to the link assembly 21. This in turn rotates the crank lever giving upward motion to the lift rods.

Oil dash pots Fig. 5-(3) absorb the energy of the moving parts on opening. The oil level in these dash pots should be checked during regular maintenance.

Venting

Gases generated during circuit interruption are separated from the oil and vented to the outside by means of a pebble filled chamber Fig. 6 located in the top frame Fig. 3 - (1). There are no adjustments and no maintenance required unless the pebbles should be removed and cleaned. The elbow (4) is removeable for this purpose.

Tank Lifter

A pair of chain blocks serves as a tank lifter. Two men can raise the tank filled with oil quite readily. Clearance should be left to the rear of the breaker to allow for the removal of the tank for cleaning and maintenance purposes.

Contacts

The contacts consist of a stationary explosion chamber mounted on the lower end of the bushings, and moving blades and rods supported from the mechanism linkage.

Line-up of the chamber contact to the vertical position is important. The contact rod moves through the throat of the chamber and therefore the centre line of the chamber should coincide with the centre line of the contact rod. In mounting the adapter support and adapter, a spirit level should be used to make certain the chambers are lined up vertically. This vertical alignment can be adjusted by turning the adapter support on the centre line of the bushing or by loosening the bolts between the bushing and top frame and altering the angle of the bushing.

The moving contacts consist of blades clamped to the lower end of the wooden operating rods and holding, by means of slotted supports, the adjustable contact rods, Figure 4 (5). These contacts may be screwed in or out to obtain correct contact compression on all stationary contacts and to ensure that each phase is making and breaking at approximately the same time.

Contact Assembly

The complete explosion chamber, Fig. 4 (7) is removed by unclamping from the bottom of the bushing. It is important that the explosion chambers be set up so the parts are exhausting radially as shown in Fig. 2. To inspect the fixed contacts the entire baffle assembly may be taken apart by removing the dowel screws. The explosion chamber contacts, spring loaded, are assembled on the adapter and are renewable.

The explosion chamber contacts and moving contact rods should be replaced when they become badly burned. Over a period of time the baffles may become burned sufficiently to require replacement of the baffle assembly.

Operation and Maintenance

The safety and successful functioning of connected apparatus depends upon proper and reliable operation of the oil circuit breaker. To obtain this the breaker as a whole must have regular systematic inspections. The frequency of these inspections should be determined by each operating company on the basis of the number of operations (including switching), the magnitude of the current interrupted and any unusual operations which occasionally occur. Operating experience will soon establish a maintenance schedule which will give an assurance of proper breaker condition. The following paragraphs give a resume of the points to be included in an inspection and a number of general recommendations.

1. At regular inspections:

   (a) The current carrying capacity of high pressure line or point contacts is practically independent of the condition of the contact surface. With sufficient contact pressure the area of contact is not important. Therefore, with these contacts, where arcing and current carrying functions are performed by the same contact, it is not necessary to maintain the surface of the contacts. As the contacts are burnt away by arcing, it may be necessary to readjust the contact compression and when burned sufficiently, to replace the contacts.

   (b) The oil should be checked. Oil in service should be tested at approximately three month periods. If the dielectric strength of the oil tests less than 16,500 volts, it should be filtered. When sampling oil, the sample container should be a wide mouthed glass bottle, cork stoppered, with at least one pint capacity. The bottle should be cleaned and dried and free from moisture before it is used.

   Test samples should be taken only after the oil has settled for some time. Samples should be taken from the valve at the bottom of the tank and sufficient oil drawn off to make certain that the sample represents oil from the tank proper and not oil that is stored in the drain pipe. A glass receptacle is desired so that if water is present it may be readily observed. If water is found, an investigation of the cause should be made and a remedy applied. Excessive water is indicative of leakage somewhere in the breaker structure.

(c) All insulation parts should be thoroughly cleaned to remove any trace of carbon which may remain when the oil is drained from the tank. It is recommended that the oil be removed and the tank cleaned since the carbon which adheres to the side of the tank is not removed by filtering.

(d) The operating and breaker mechanism should be thoroughly checked and all bearing surfaces lubricated, using D50H15 circuit breaker lubrication.

(e) Dashpots should be checked and the pistons examined to see that they work freely and function properly.

(f) All bolts, nuts, washers, cotter pins and terminal connections should be in place and properly tightened. The gland nuts, small valves and oil gauge should be checked to see that they are sufficiently tight to prevent leakage. In tightening gland nuts and gauge connections, care must be taken not to damage packing nor put undue strains on the gauge glass.

(g) Operate the breaker slowly by hand and then electrically; check the points listed under final inspection in each case.

2. Be sure the breaker and its mechanism are disconnected from all sources of electric power before inspecting or repairing. After breaker has been disconnected from power lines, grounding leads should be properly attached before coming in contact with breaker parts.

3. Be sure breaker framework is well grounded.

4. Inspect the bushing supports as the vibration due to the operation of the breaker may cause the bushings to move slightly and cause misalignment of contacts.

5. Clean the bushings at regular intervals. This is very important where abnormal conditions exist, such as salt deposits, cement dust or acid fumes, to avoid flashover as a result of accumulation of foreign substances on their surfaces.

6. See that the oil is kept at the proper level in the breaker tank.

7. The maintenance closing device is to be used in making adjustments only and should never be used to close the breaker on load. Care should be taken also to see that the breaker is never operated electrically with the maintenance jack in position.

8. The apparatus should always be operated by hand after any adjustments are made to make certain all parts are in order.

Preparation of Gaskets and Gasket Surfaces (for cork, neoprene, vellumoid, rubber and similar material.)

All gasket surfaces should be thoroughly cleaned to remove all oil, grease, or foreign material which would prevent adhesion of the gaskets or sealing of the joints. They should be allowed to become thoroughly dry before proceeding with treatment.

All surfaces, where gaskets (except rubber gaskets) are to be permanently assembled, should be given a full unbroken coat of "1201" compound. All gaskets (except rubber gaskets) for such joints should be given a similar coat. This should be done at such a time in the assembly cycle so that the compound be allowed to dry at least one half hour, and not more than twenty four hours, before assembly. In making up permanent joints, both the gasket and gasket surfaces should again be coated with glyptal and the parts bolted up before the glyptal sets.

For joints which have to be opened, the surface of the removable gasket should not be coated nor the part installed until the compound on the gasket is perfectly dry. The side of the gasket to be assembled against the uncoated surfaces should be greased to prevent sticking.

Rubber gaskets, due to their composition do not require coating with compound or greasing as outlined above for gaskets of other material.

RENEWAL PARTS

It is recommended that sufficient renewal parts be carried in stock to enable the prompt replacement of any worn, broken or damaged part. It will be readily appreciated that a stock of such parts minimizes service interruptions caused by breakdowns and saves time and expense.

Table 2 is a list of parts which are most subject to wear or breakage and which are recommended for stocking. The number stocked will vary depending on severity of service and the time required to secure replacements but a study of the following table will indicate a basis for ordering spares.

Table 2: Renewal Parts Data

Type of Breaker	No. per Breaker							Recommended Stock															
								1 Breaker							5 Breakers								
	Bushing	Contact Finger	Contact Rod	Contact Blade	Lift Rod	Lift Rod Guide	Oil Gauge Glass	Bushing	Contact Finger	Contact Rod	Contact Blade	Lift Rod	Lift Rod Guide	Oil Gauge Glass	Bushing	Contact Finger	Contact Rod	Contact Blade *	Lift Rod	Lift Rod Guide	Oil Gauge Glass
KSO-14.4- 250-600 500-1200 1000-2000 1500-1200 -4000	6	36	6	3	3	1	1	1	36	6	0	1	0	1	3	72	12	2	3	1	2
KSO-14.4-1000-3000	6	54	6	3	3	1	1	1	54	6	0	1	0	1	3	108	12	2	3	1	2
KSO-23-250-600 500-1200	6	36	6	3	3	1	1	1	36	6	0	1	0	1	3	72	12	2	3	1	2
KSO-34.5- 500-800 1000-1200 1000-2000	6	24	6	3	3	1	1	1	24	6	0	1	0	1	3	48	12	2	3	1	2
KSO-46- 500-800 1000-1200 -2000	6	24	6	3	3	1	1	1	24	6	0	1	0	1	3	48	12	2	3	1	2
KSO-69-1000-800 1500-1200	6	12	6	3	3	1	1	1	12	6	0	1	0	1	3	24	12	2	3	1	2
KSO-69-2500-1200 3500-2000	6	30	6	3	3	1	1	1	30	6	0	1	0	1	3	60	12	2	3	1	2

* The contact blade has two lengths, the longer blade for use on the centre phase. Recommended 1 long blade, 1 short blade.

DRAWING #309C735

TYPICAL ANALYSER CHART AS TAKEN ON TYPE KSO 14.4–500 1200 AMPERE—OIL CIRCUIT BREAKER

(REFER TO TABLE 1 FOR VALUES ON BREAKERS OF OTHER RATINGS)

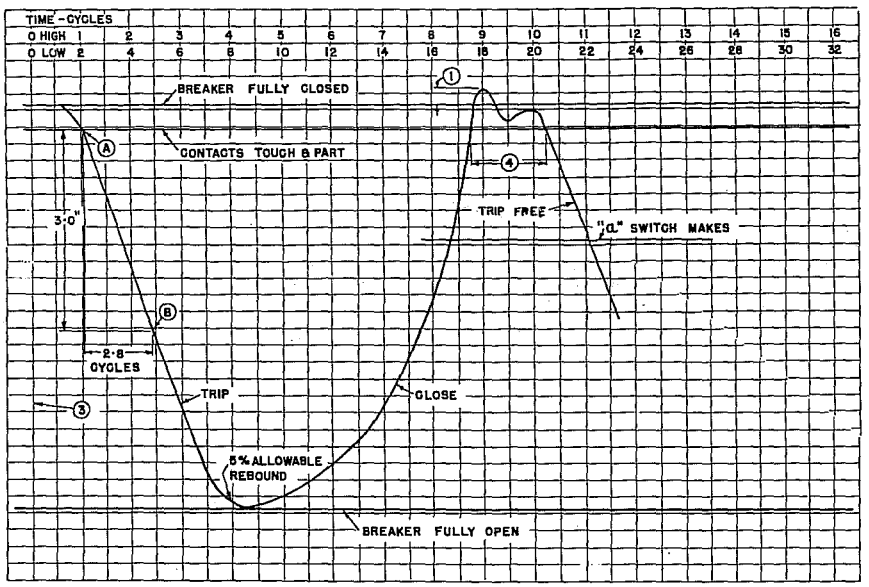

1. OVERTRAVEL ¼", MAX. ½"
2. AVERAGE OPENING SPEED FROM 'A' TO 'B'
   $\frac{60}{2.8} \times \frac{3}{12}$ = 5.4 FT./SEC. RANGE-5 TO 6 FT./SEC.
3. CLOSE & TRIP COIL ENERGIZED ON ZERO LINE
4. TRIP FREE TIME-CONTACTS TOUCH TO CONTACTS OPEN..3.0 CYCLES

A. CONTACTS PART
B. 3" FROM CONTACT TOUCH POSITION

Fig. 1

VIEW OF INTERRUPTER FROM ARROW "A" SHOWING PORT

DRAWING #309C734

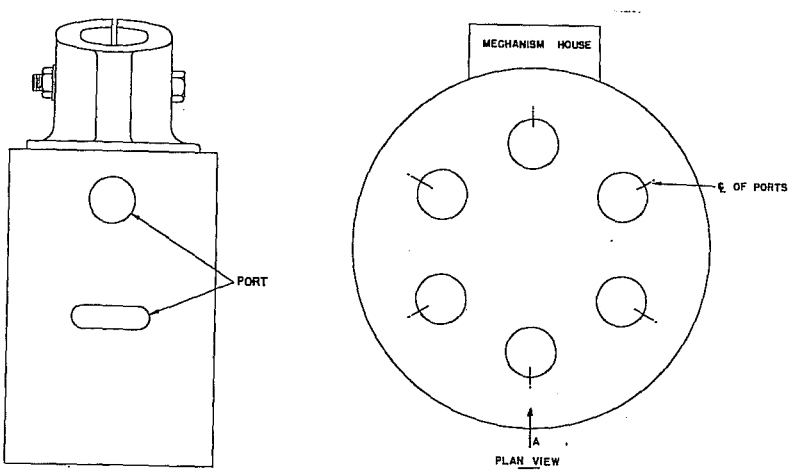

Fig. 2

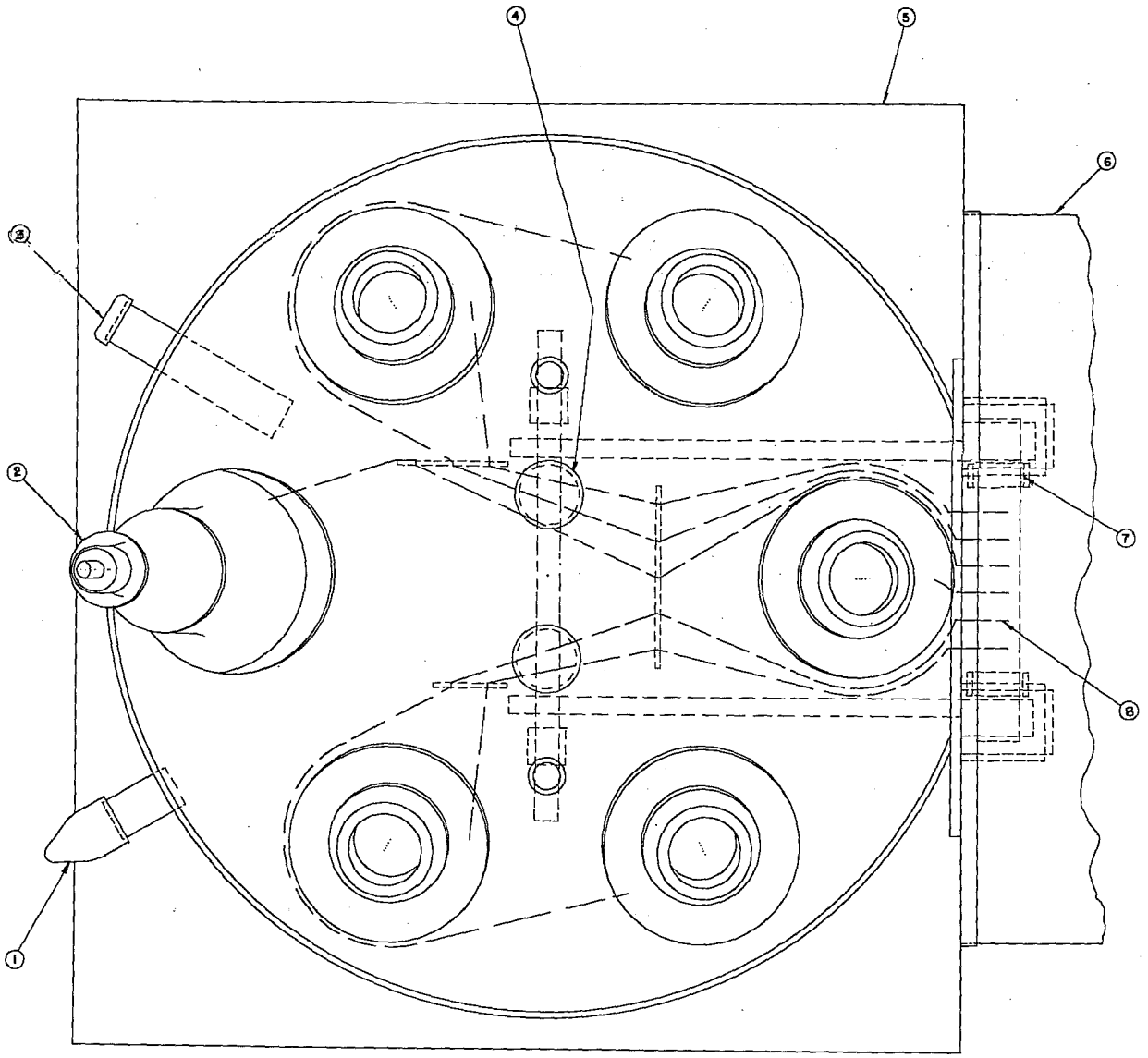

DRAWING #498C800

Fig. 3

PLAN VIEW

1. SEPARATING VENT
2. HIGH VOLTAGE BUSHING
3. FILL VALVE
4. BUFFER
5. TOP FRAME
6. MECHANISM HOUSE
7. SHAFT BUSHING
8. BUSHING CURRENT TRANSFORMER LEAD

DRAWING #498C943

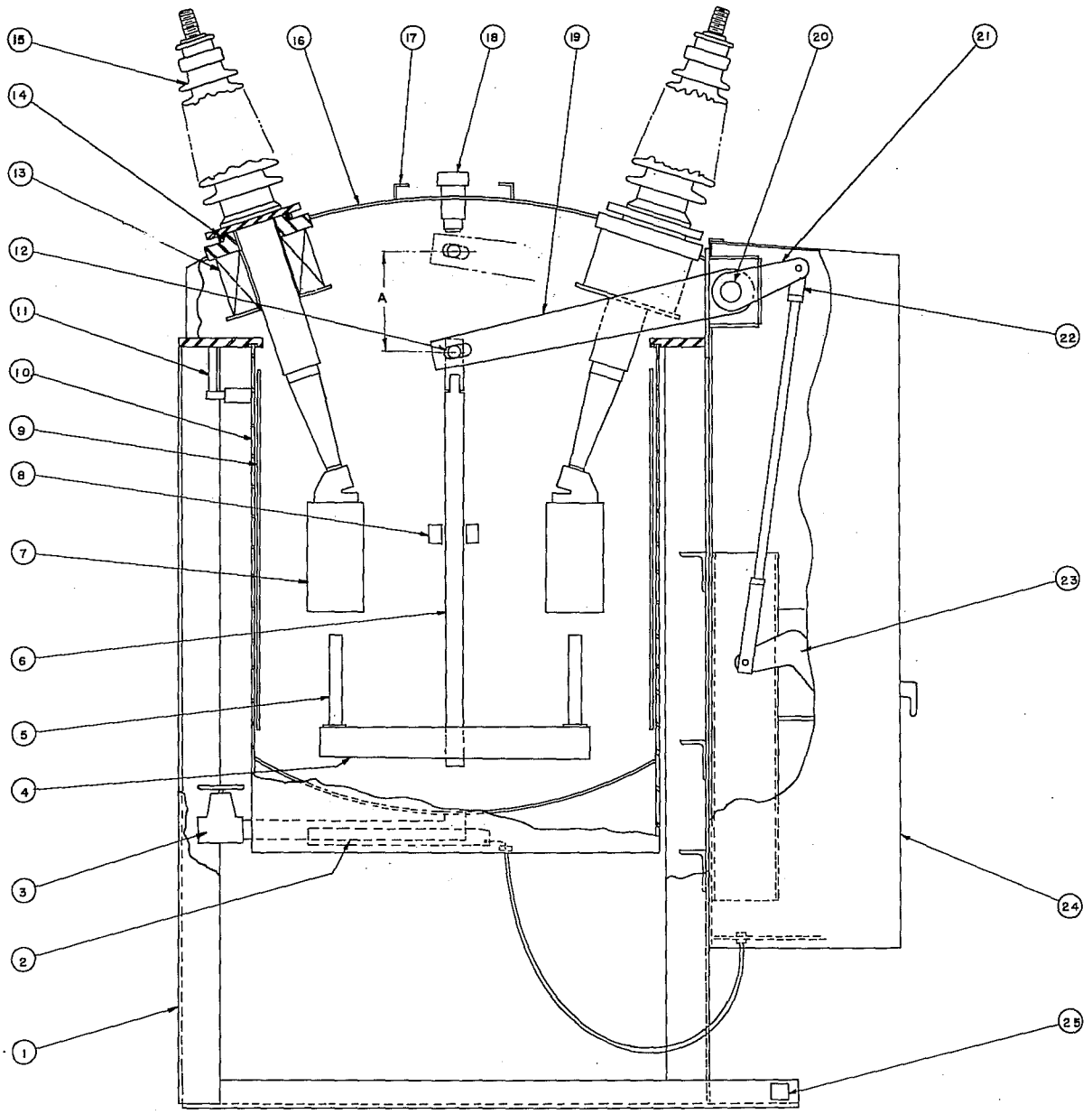

Fig. 4

SECTIONAL VIEW THROUGH CENTRE PHASE

1. FRAMEWORK
2. TANK HEATERS
3. DRAIN VALVE
4. CONTACT BLADE
5. CONTACT ROD
6. LIFT ROD
7. EXPLOSION CHAMBER
8. GUIDE
9. TANK LINING
10. OIL TANK
11. OIL GAUGE
12. CROSSHEAD
13. BUSHING CURRENT TRANS.
14. BUSHING GASKET
15. BUSHING
16. TOP FRAME
17. ANALYZER SUPPORT
18. BUFFER
19. CRANK
20. SPLINE SHAFT
21. LEVER
22. ADJUSTABLE COUPLING
23. SOLENOID CRANK
24. MECHANISM HOUSE
25. GROUNDING TERMINAL

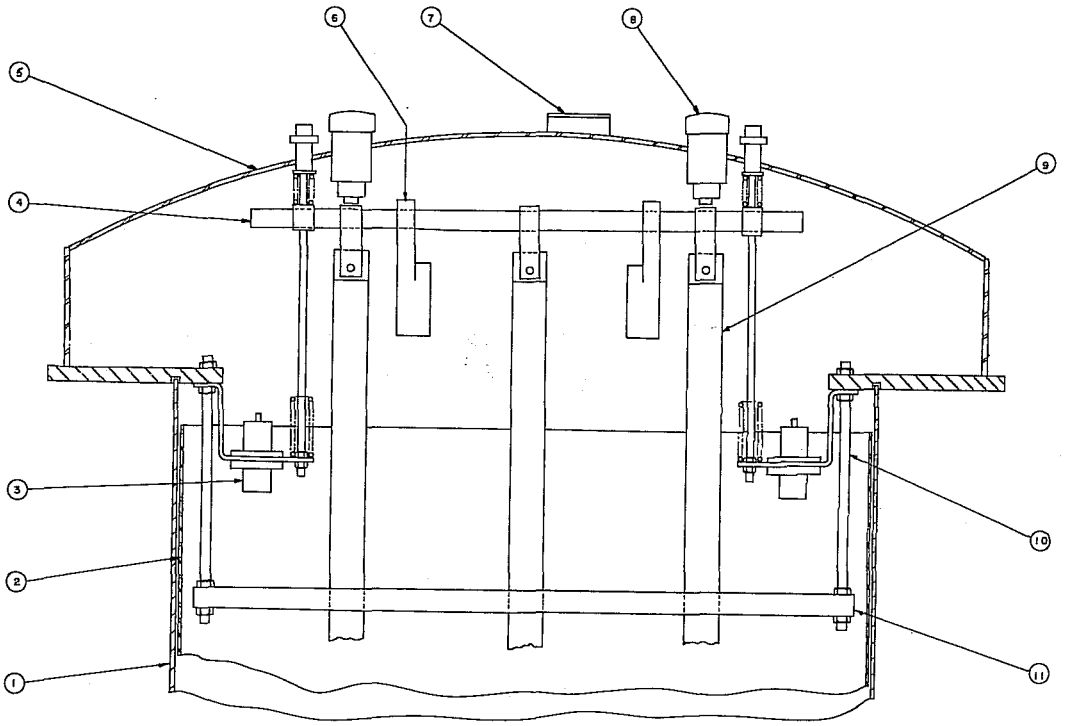

Fig. 5

BREAKER MECHANISM

1. TANK
2. TANK LINING
3. OIL DASHPOT
4. CROSSHEAD
5. TOP FRAME
6. CRANK
7. ANALYSER SUPPORT
8. BUFFER
9. LIFT ROD
10. GUIDE SUPPORT
11. GUIDE

DRAWING #498C944

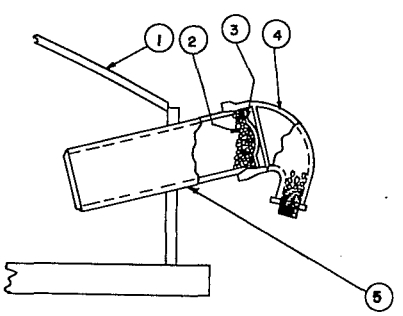

Fig. 6

SEPARATING VENT

1. TOP FRAME
2. PEBBLES
3. SCREEN
4. STREET ELBOW
5. CHAMBER

DRAWING #309C733

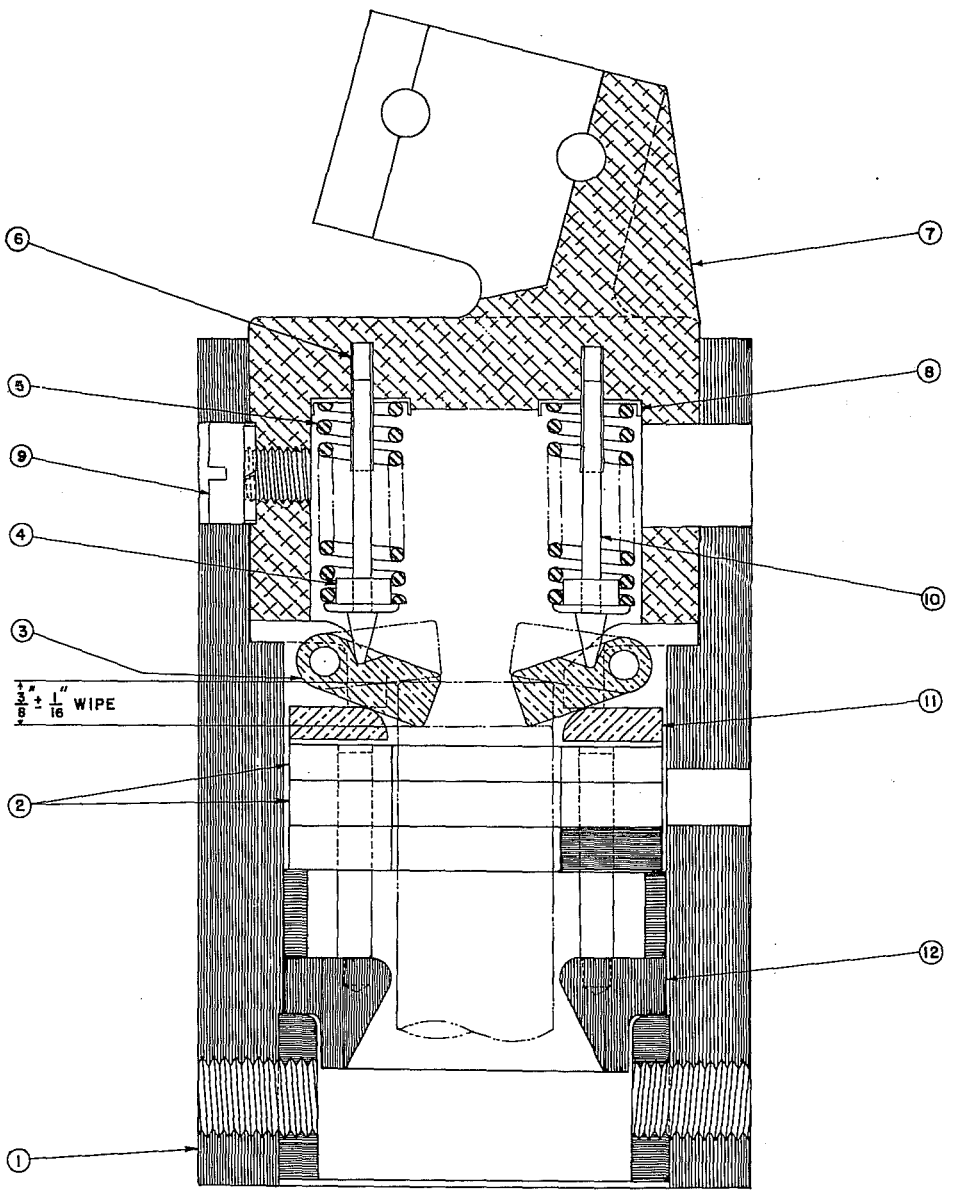

Fig. 7

EXPLOSION CHAMBER

14.4 and 23 KV—600, 1200 and 2000 Amperes

1. EXPLOSION POT BODY
2. JET PLATES
3. CONTACT FINGER
4. SPRING BUSHING
5. SPRING
6. GUIDE
7. ADAPTER
8. INSULATING CAP
9. DOWEL SCREW
10. SPRING STEM
11. STOP PLATE
12. THROAT

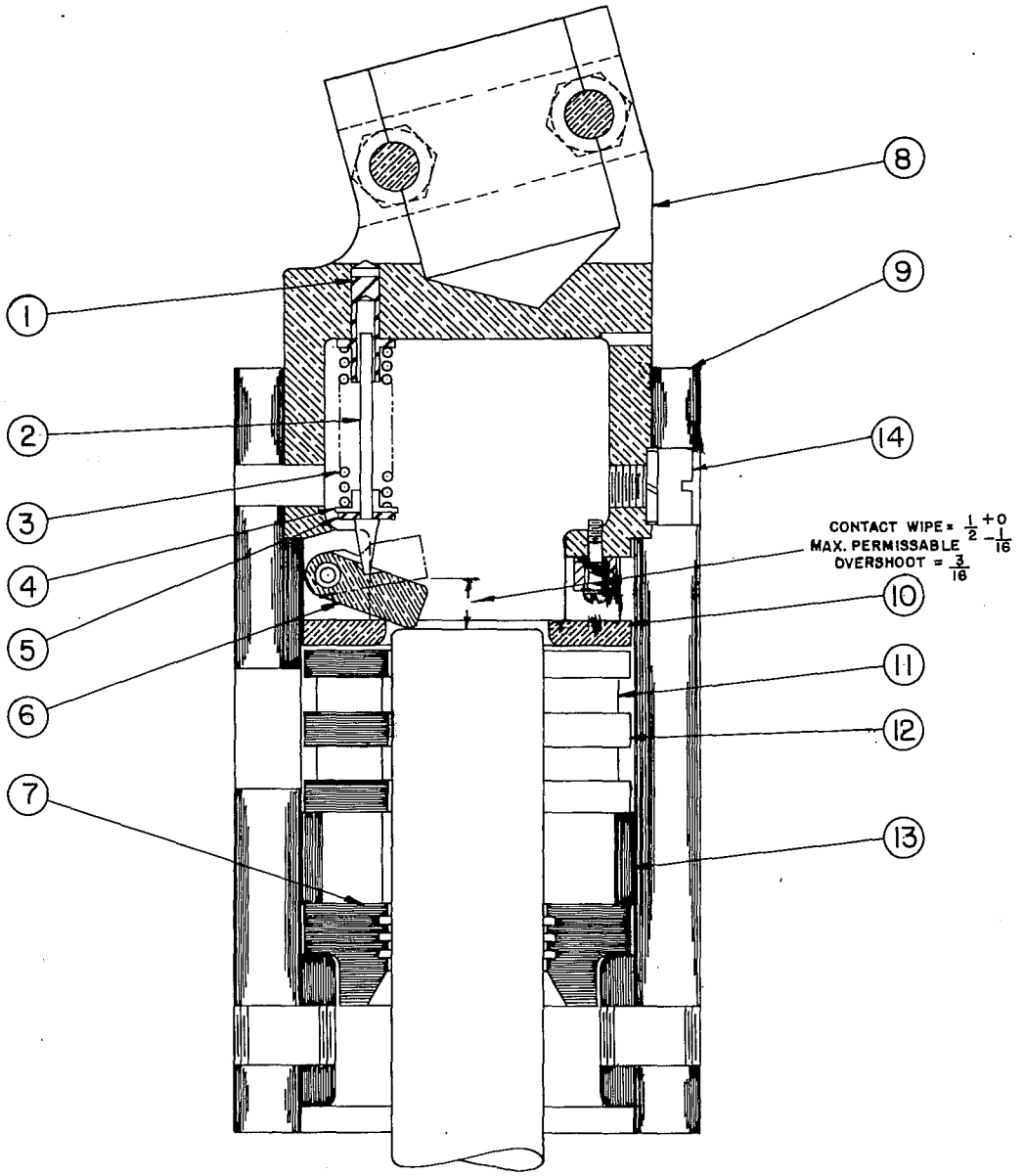

DRAWING #498C982

Fig. 8

EXPLOSION CHAMBER

14.4 KV—3000 Amperes

1. GUIDE
2. STEM
3. SPRING
4. BUSHING
5. WASHER
6. CONTACT FINGER
7. THROAT PLATE
8. ADAPTER
9. BODY
10. STOP PLATE
11. JET PLATE
12. BAFFLE
13. SPACER
14. DOWEL SCREW

DRAWING #498C801

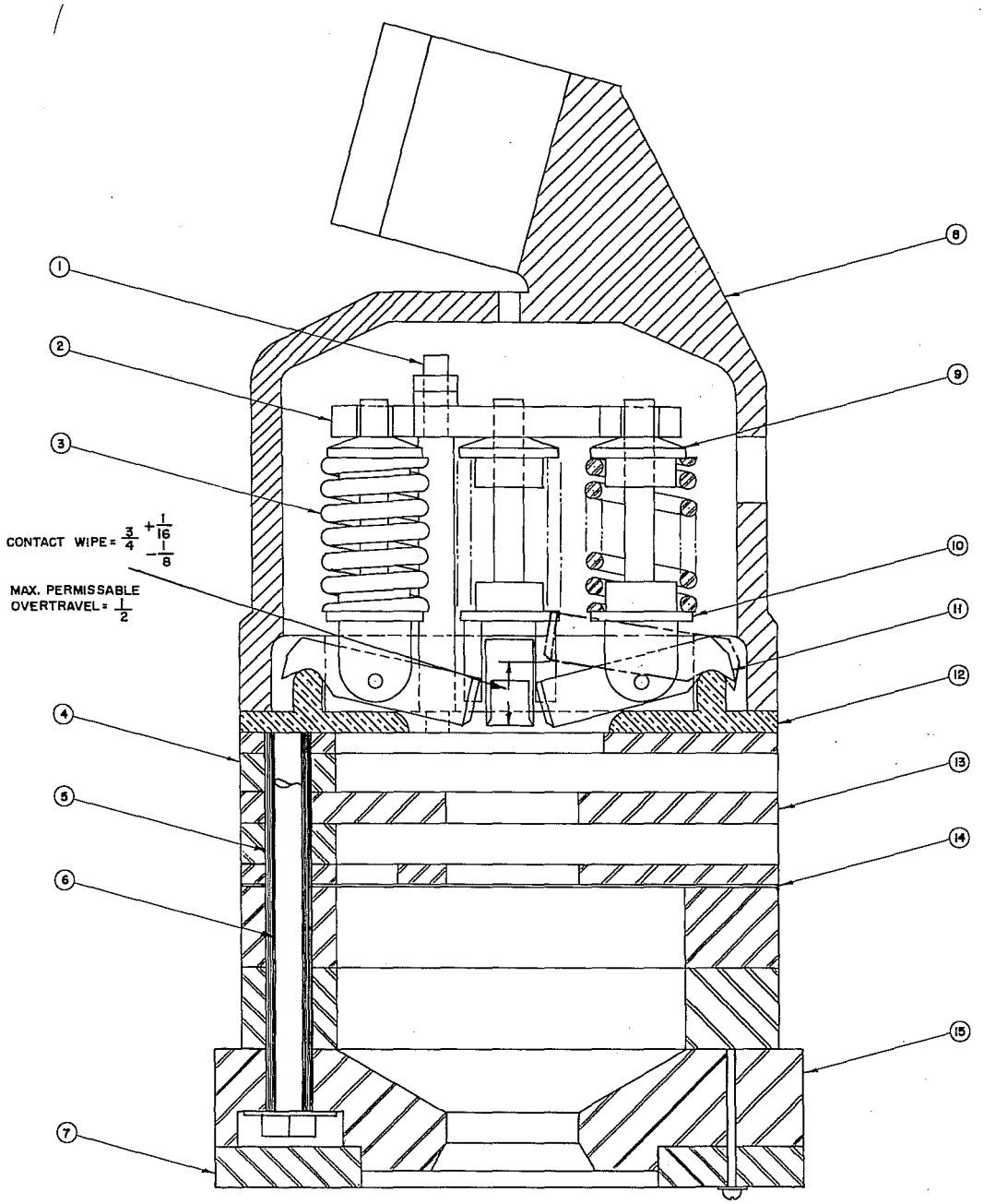

Fig. 9

EXPLOSION CHAMBER

34.5 and 46KV

1. STUD
2. GUIDE PLATE
3. SPRING
4. SPACER
5. TUBE
6. DOWEL SCREW
7. INSULATING PLATE
8. ADAPTER
9. SPRING SEAT
10. SPRING COLLAR
11. CONTACT FINGER
12. BASE PLATE
13. BAFFLE
14. GASKET
15. THROAT

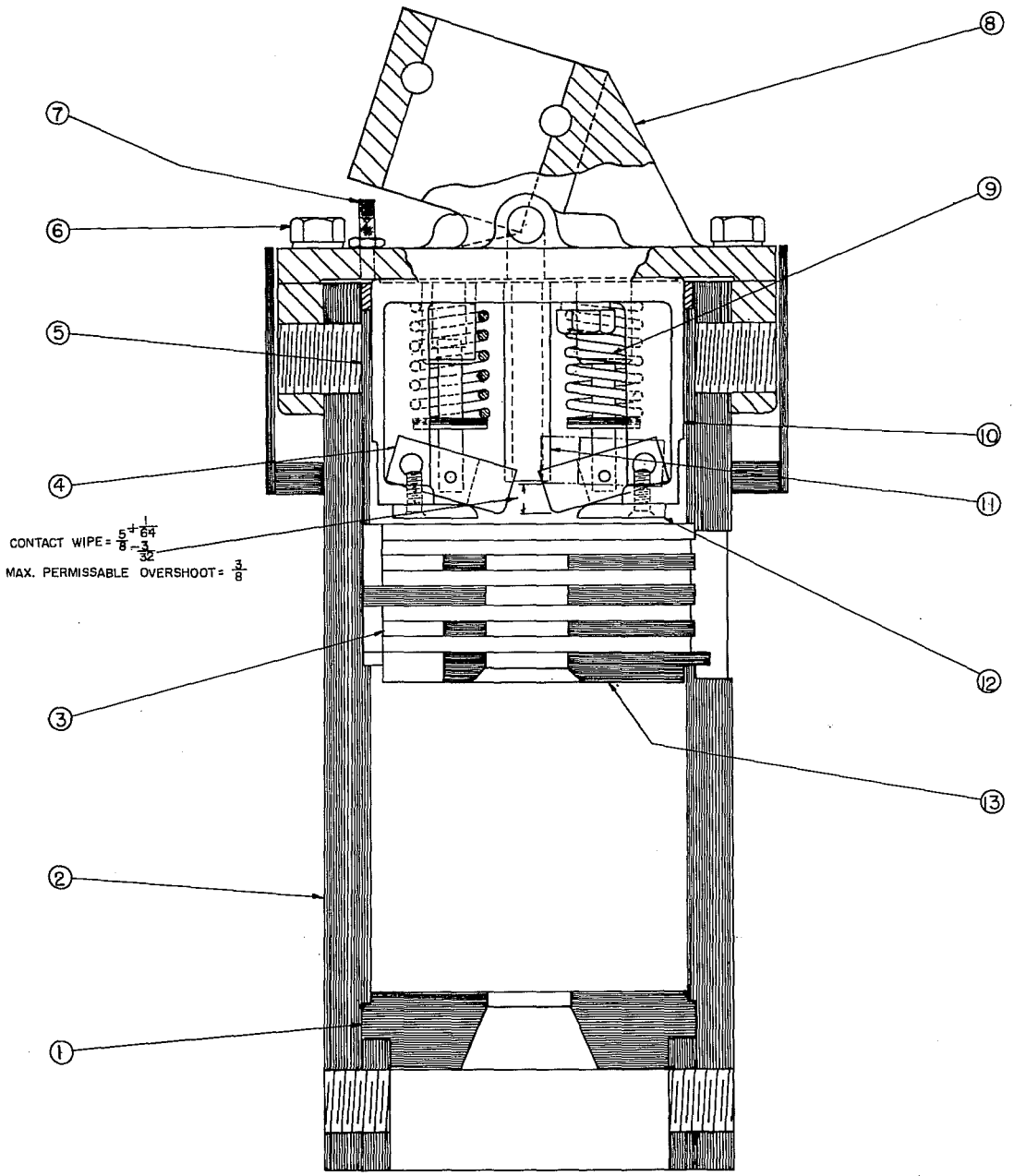

DRAWING #498C947

Fig. 10

EXPLOSION CHAMBER

69KV—1000 and 1500 MVA

1. THROAT
2. CHAMBER BODY
3. BAFFLE ASSEMBLY
4. CONTACT
5. SPACER
6. DOWEL SCREW
7. JACK SCREW
8. ADAPTOR
9. SPRING
10. CONTACT BASE
11. VENT TUBE
12. ARCING PLATE
13. INNER THROAT

DRAWING #498L940

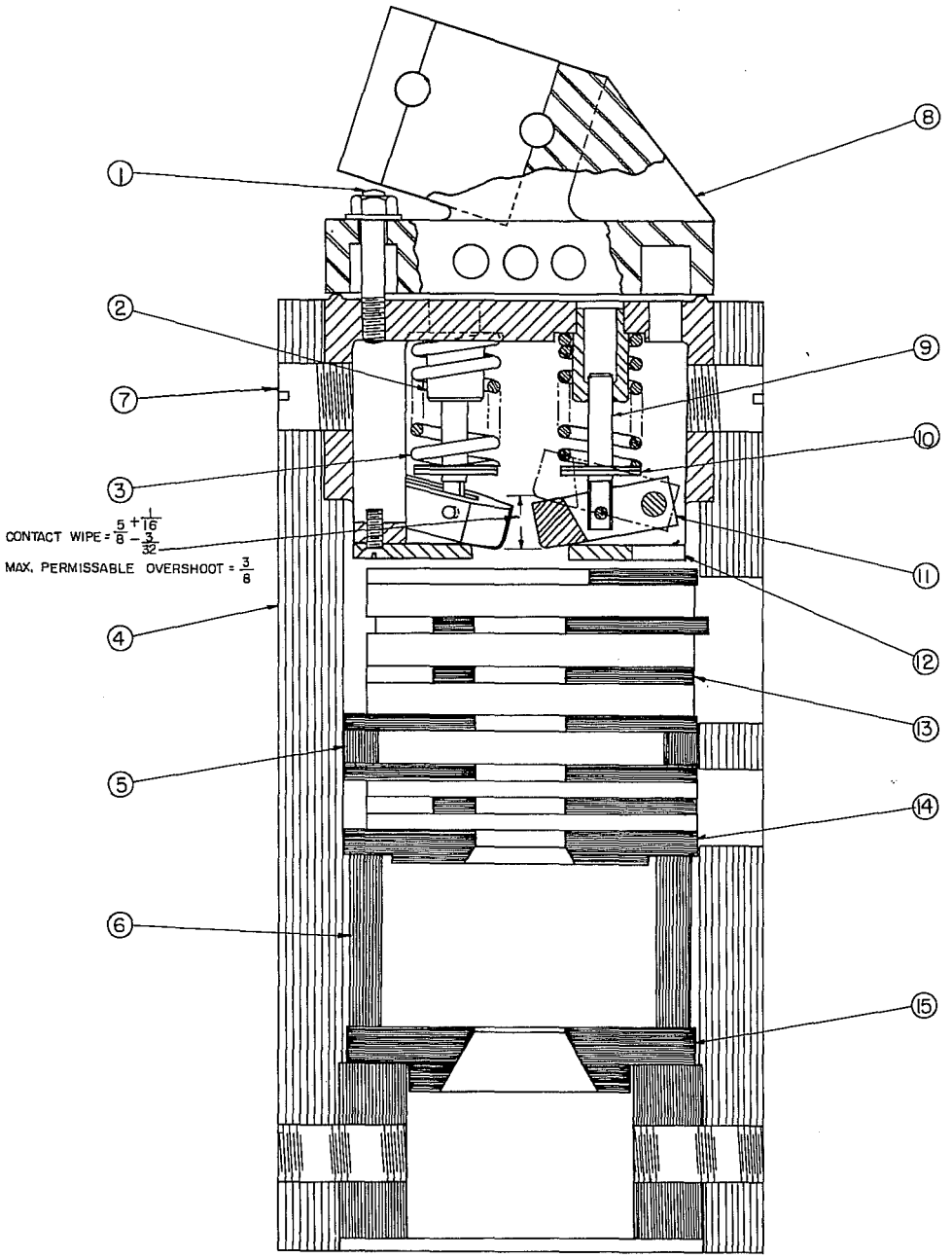

Fig. 11

EXPLOSION CHAMBER

69KV—2500 and 3500MVA

1. STUD
2. GUIDE BUSH
3. SPRING
4. BODY
5. SPACER
6. TUBE
7. DOWEL SCREW
8. ADAPTER
9. SPRING GUIDE
10. SPRING COLLAR
11. CONTACT FINGER
12. ARCING PLATE
13. BAFFLE PLATE
14. INNER THROAT
15. OUTER THROAT

TABLE 1: INSTALLATION INSPECTION DATA

Table 1: Installation Inspection Data

Type	Amps 60 Cycle	Stroke Inches (Dim. A Fig. 4)	Contact Wipe Inches (See Explosion Chambers)	Maximum Over-travel Inches	Minimum Distance from Top of Contact Block to Bottom of Interrupter Breaker closed Inches	Opening Speed Ft./Sec.	Distance over which opening speed Calculated Inches	Maximum Contact Parting Time Cycles	Maximum Trip-Free Time Touch to part Cycles	Maximum Closing Time Cycles
KSO-14.4-250	600	6 + 1/4 — 0	3/8 ± 1/16	1/2	7/8	5-6	3	3.5	4.5	23
KSO-14.4-250	1200	"	"	"	"	"	"	"	"	"
KSO-14.4-500	600	"	"	"	3/4	"	"	"	"	"
KSO-14.4-500	1200	"	"	"	"	"	"	"	"	"
KSO-14.4-500	2000	"	"	"	"	"	"	"	"	26
KSO-14.4-1000	1200	"	"	"	1 3/4	"	"	"	"	23
KSO-14.4-1000	2000	"	"	"	"	"	"	"	"	26
KSO-14.4-1000	3000	10 + 1/4 — 0	1/2 + 0 — 1/16	7/16	3/4	"	5	"	"	33
KSO-14.4-1500	1200	10 1/2 "	1 5/16 ± 1/16	5/16	1 1/4	5 1/2-6 1/2	"	4.5	"	35
KSO-14.4-1500	4000	"	"	"	"	"	"	"	"	"
KSO-23-250	600	6 + 1/4 — 0	3/8 ± 1/16	1/2	5/8	5-6	3	3.5	4.5	23
KSO-23-250	1200	"	"	"	"	"	"	"	"	"
KSO-23-500	600	"	"	"	1	"	"	"	"	"
KSO-23-500	1200	"	"	"	1	"	"	"	"	"
KSO-34.5-500	800	10 + 1/4 — 0	3/4 + 1/16 — 1/8	1/2	3/4	6-7	5	3.5	4.5	26 ††
KSO-34.5-1000	800	"	"	"	"	"	"	"	"	" ††
KSO-34.5-1000	1200	"	"	"	"	"	"	"	"	" ††
KSO-34.5-1000	2000	"	"	"	7/8	"	"	"	"	" ††
KSO-46-500	800	10 + 1/4 — 0	3/4 + 1/16 — 1/8	1/2	3/4	6 1/2-7 1/2	5	3.5†	4.5‡	26 ††
KSO-46-1000	800	"	"	"	"	"	"	" †	" ‡	" ††
KSO-46-1000	1200	"	"	"	"	"	"	" †	" ‡	" ††
	2000	"	"	"	7/8	"	"	" †	" ‡	" ††
KSO-69-1000	800	13 + 1/4 — 0	5/8 + 1/16 — 3/32	3/8	7/8	"	8	3.5†	4.5‡	35 *
KSO-69-1000	1200	"	"	"	"	"	"	" †	" ‡	" *
KSO-69-1500	800	"	"	"	"	"	"	" †	" ‡	" *
KSO-69-1500	1200	"	"	"	"	"	"	" †	" ‡	" *
KSO-69-2500	1200	"	"	"	1	7-8	"	"	"	" *
KSO-69-2500	2000	"	"	"	1	"	"	" †	" ‡	" *
KSO-69-3500	1200	"	"	"	1	"	"	" †	" ‡	" *
KSO-69-3500	2000	"	"	"	1	"	"	" †	" ‡	" *

† 2.5 Cycles when pneumatic mechanism is used.

‡ 3.5 Cycles when pneumatic mechanism is used.

†† 12 Cycles when pneumatic mechanism is used.

* 18 Cycles when pneumatic mechanism is used.

REFERENCE
WESTINGHOUSE SF6 SAFETY AND MAINTENANCE PROCEDURES

Created by: B. Chubbs
Revised by: B. Chubbs
Reviewed by: G. Samms
Approved by: G. Samms

MSR003-3: Westinghouse SF6 Safety and Maintenance Procedures

Safety Precautions

1. Remove AC & DC Power Supply
2. Open Breaker, Remove Air Pressure, and Discharge Springs
3. Use Gas Reclaimer to Remove SF6 Gas to External Cylinder
4. When Opening the Pole Use Suitable Fresh Air Breathing Apparatus (3M-2091), and Rubber Gloves
5. Refer to ALSTOM Rev 1 HGF1000 Instruction Manual

Maintenance Procedures

1. Remove Bushings and Interrupters
2. Replace All Gaskets on Bushings and Bushing Flanges
3. Check Interrupters for Worn Parts, Remove Conductive Grease and Replace With New
4. Install New Bushings, Fill With Air
5. Check that SF6 Low Gas Alarms and Block Close Contacts Operate at 55psig
6. Pull Vacuum to 2mm of Mercury and Fill Breaker with SF6 Gas
7. Check All Breaker Dimensional Checks
8. Clean and Install New Gasket Kit in Pilot Valve

4.0 Annex

CBWatch interface electrical connections

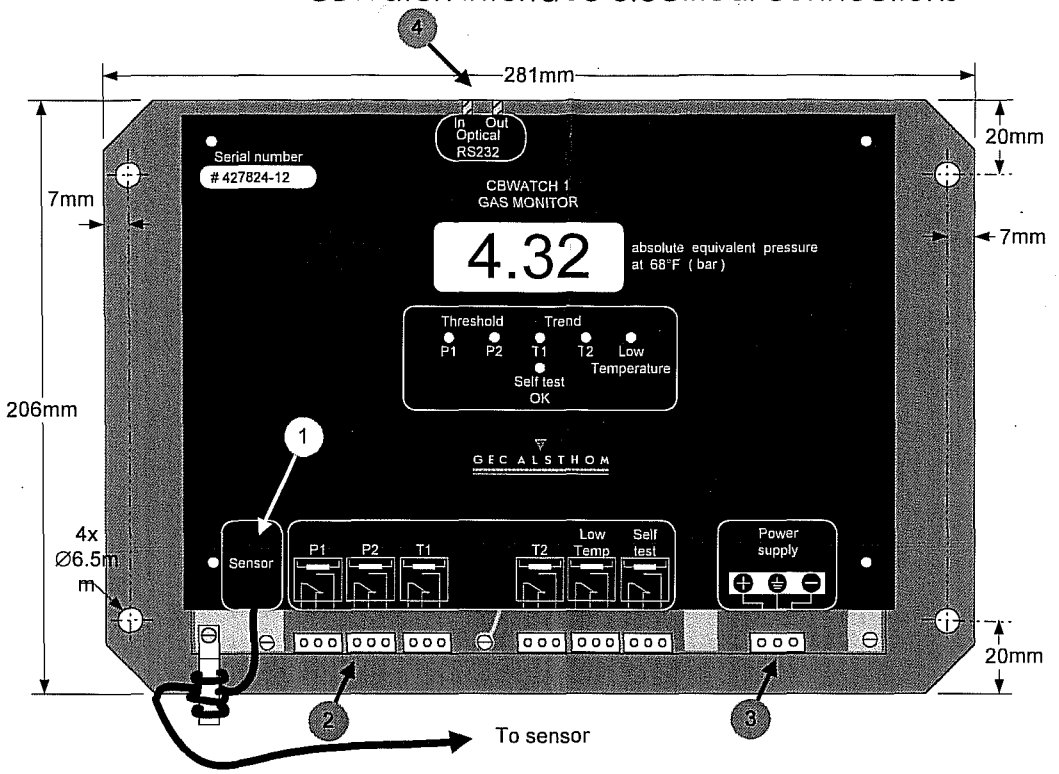

Sensor connection diagram
(From left to right)

Brown= +12Vcc	Connected to pin 30
White= ground	Connected to pin 31
Nude= ground	Connected to pin 32
Yellow= RS485A	Connected to pin 33
Green= RS485B	Connected to pin 34

Maintenance on the sensor should be execute by an qualify person only

Relays pictures

P1-P2-T1-T2 relays are shown at normal position (no alarms),

SELF TEST relay should be in the opposite position if the system is OK,

Connector can accept wire gage 24 to 12 AWG (0.241mm^2 to 3.31mm^2).

Power supply

Connector can accept wire gage 24 to 12 AWG (0.241mm2 to 3.31mm2).

Optic fiber

Connector: ST
Optic fiber: 62.5/125µm
Lenght max: 3.2km
protocol: Modbus

AREVA GAS TRANSDUCER INSTALLATION FOR CB WATCH

Tools necessary: Large adjustable, small adjustable, Teflon tape,10 mm socket, tyraps, silicone, small straight screwdriver, side cutters, meter, switching order to isolate breaker (DC will have to be off for installation but necessary for testing).

Isolate breaker and remove dc.

Attach coupling to transducer with Teflon tape in a vise.

Loosen pole nuts off ¼ inch to isolate pole from piping. Check valve closes when nut is backed off.

Drain gas from piping. Remove cap from bottom of piping junction box and press tit to release gas.

Remove cap and attach transducer. Place cap in breaker to store (cap is no longer necessary).

Tighten 3 pole nuts to reconnect gas to piping and introduce to transducer.

Remove two access covers on back of breaker.

Feed cable to cb watch. Leave drip loop in cable, The grommet is not really tight.

After routing cable reinstall metal covers and apply silicone to top edge.

Leave excess wire at back of breaker for there is a heater in front.

Remove two 10 mm bolts to swing cb watch panel. Remove 4 small slot screws to remove front of cb watch panel.

Wrap cable 3 times through iron core leaving a wire diameter of about 2 inches.

Connect as follows to block J202 and J201. Left to right brown, white, nude, yellow and green.

Apply dc to test. After a few seconds the pressure should show. We viewed about 98 psi.

*** Wire numbers 19, 20, and 21 on block J101 can be removed and 125 vdc can be applied directly. Pos on 19, ground on 20 and neg on 21. This will not be necessary if breaker is in service. Dc will already be present at cabinet. ***

If an E1 error shows wire cables yellow and green have to be swapped. There are two versions of boards.

RENEWAL PARTS

MAGNE-BLAST CIRCUIT BREAKER

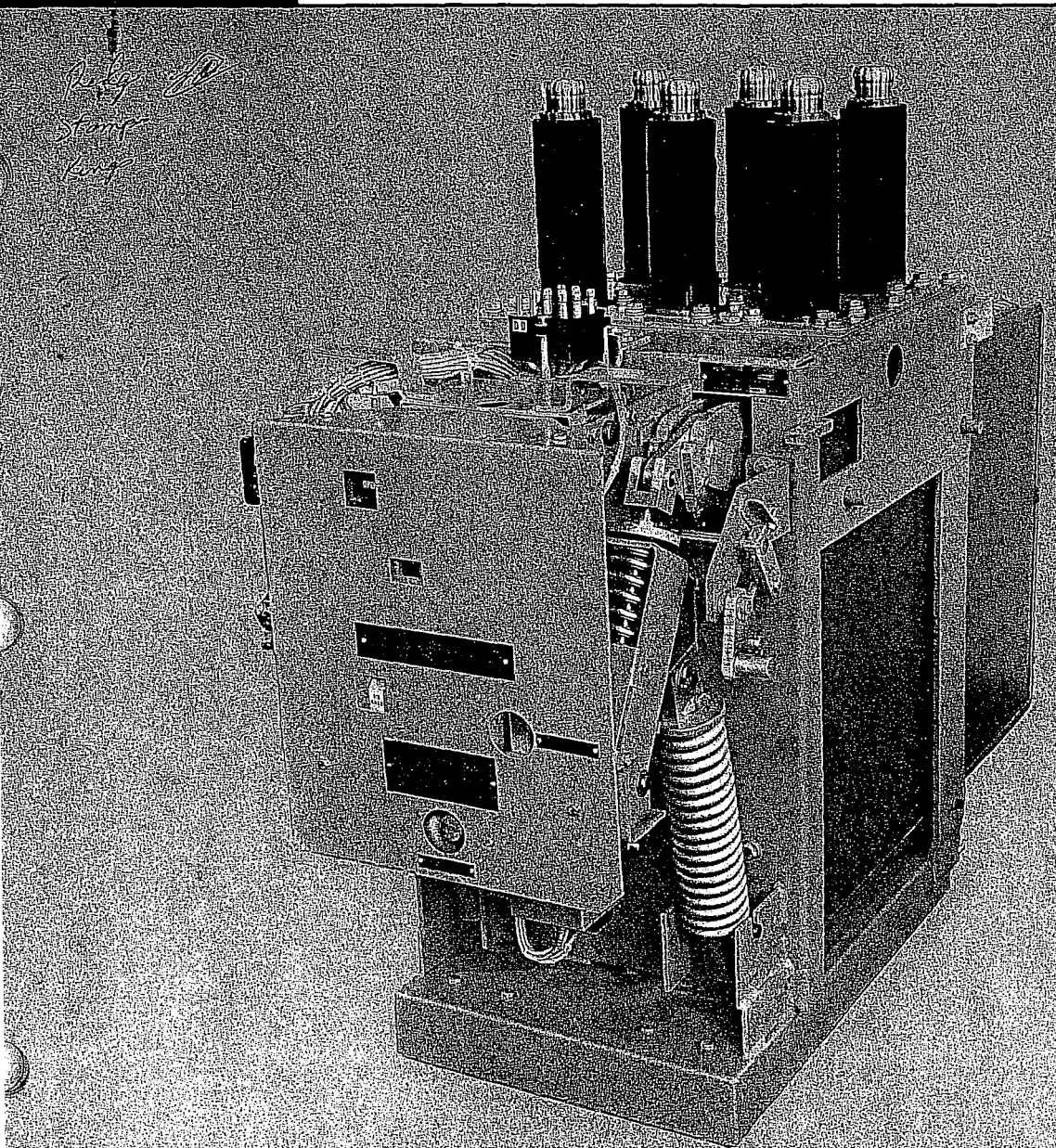

TYPES

AM 4.16 – 150 – 8C	AM 4.16 – 250 – 8CB
AM 4.16 – 150 – 8CR	AM 4.16 – 250 – 8CR
AM 4.16 – 150 – 8H	AM 4.16 – 250 – 8H
AM 4.16 – 150 – 8HR	AM 4.16 – 250 – 8HB
AM 4.16 – 250 – 8C	AM 4.16 – 250 – 8HR

J7904

These instructions do not purport to cover all details or variations in equipment nor to provide for every possible contingency to be met in connection with installation, operation or maintenance. Should further information be desired or should particular problems arise which are not covered sufficiently for the purchaser's purposes, the matter should be referred to the nearest office of Canadian General Electric Company Limited.

TABLE OF CONTENTS

TITLE	PAGE
INTRODUCTION	1
RECEIVING, HANDLING AND STORAGE	1
RECEIVING AND HANDLING	1
STORAGE	1
INSTALLATION	2
PROCEDURE	2
ADJUSTMENTS	2
DESCRIPTION OF OPERATION	3
GENERAL	3
SPRING CHARGING	3
Closing Operation	3
Opening Operation	3
Trip Free Operation	4
PREVENTIVE MAINTENANCE	4
PERIODIC INSPECTION	4
Arc Chutes	4
Breaker Contacts	5
Mechanism	5
Bushings and Insulation	5
Insulation Test	5
LUBRICATION	5
Method of Cleaning Bearings	6
MAINTENANCE FOR REPETITIVE SWITCHING DUTY	6
General	6
Every 2,000 Operations or Semi-Annually (Whichever Comes First)	6
Every 10,000 Operations	7
Every 20,000 Operations or Every Five Years (Whichever Comes First)	7
CORRECTIVE MAINTENANCE	9
ADJUSTMENTS	9
Arcing Contact Wipe	9
Primary Contact Wipe	9
Primary Contact Gap	9
Trip Latch Wipe	9
Trip Latch Clearance	9
Prop Clearance	9
Release Latch Wipe	9
Release Latch Monitoring Switch	9
Motor and Relay Switches	10
Interlock Switch Wipe	10
Auxiliary Switch	10
Driving Pawl Adjustment	10
Auxiliary Devices	10
TROUBLESHOOTING	11
REPAIR AND REPLACEMENT	11
Arc Chute	11
Contacts	14
Bushings	15

TABLE OF CONTENTS (Cont'd)

Interlock Switch	15
Latch Checking Switch	15
Motor, Relay and Light Switches	15
Trip Shaft and Latch	16
Trip Latch Roller Bearing	16
Closing Latch	16
Motor Support	16
Cam	16
Trip Coil	16
Spring Release Coil	16
Closing Springs	16
Opening Springs	17
RENEWAL PARTS	17
Ordering Instructions	17
Elementary Diagram	30
Renewal Parts - Breaker	33
Renewal Parts - ML-13 Mechanism	45

CHARTS AND TABLES

Lubrication Chart	8
Troubleshooting Chart	12
Maintenance Parts for Non-Repetitive Applications	34
Additional Maintenance Parts for Repetitive Applications	35

LIST OF ILLUSTRATIONS

FIGURE	TITLE	PAGE
1	Operating Mechanism - Left Side	18
2	Operating Mechanism - Front	18
3	Operating Mechanism - Right Side	19
4	Spring Blocking Device	19
5	Operating Mechanism	20
6	Control Mechanism	21
7	Breaker Pole Unit - Cross Section	21
8	Contact Adjustments	22
9	Adjustable Coupling For Making Primary Contact Wipe Adjustments	22
10	Positive Interlock Switch	23
11	Auxiliary Switch And Trip Coil	23
12	Latch Checking Switch	24
13	Plunger Interlock	24
14	Driving Elements	25
15	Arc Chute Assembly	25
16	Arc Chute Assembly - Side Removed	26
17	Arc Chute Assembly - Front	26
18	Arc Chute Partially Removed	27
19	Arc Chute Fin Spacing	27
20	Rear Bushing Assembly	28
21	Spring Release Interlock	28
22	Method of Replacing Primary Contact Springs	29
	RENEWAL PARTS (BREAKER)	
23	Cross Section	36
24	Hinge Cross Section	38
25	Rear Bushing Assembly	38
26	Arc Chute	40
27	Movable Contact Arm Assembly	43
	RENEWAL PARTS (ML-13 MECHANISM)	
28	Plunger Interlock For ML-13 Mechanism	46
29	Spring Release For ML-13 Mechanism	47
30	ML-13 Mechanism	48
31	ML-13 Stored Energy Mechanism	51

MAGNE-BLAST CIRCUIT BREAKER

AM 4.16-250-8* and AM 4.16-150-8*

INTRODUCTION

The magne-blast circuit breaker is the removable interrupting element for use in vertical-lift metal-clad switchgear, to provide reliable control and protection of power systems. Among the many advantages of metal-clad switchgear are added protection to equipment and personnel, compactness, simplified installation and reduced maintenance. In keeping with these features the magne-blast breakers are designed for interchangeability and maneuverability, together with reliability and low maintenance requirements.

The magne-blast circuit breaker operates on the principle that an arc can be interrupted in air by sufficiently elongating and cooling it. This is accomplished by means of a strong magnetic field that lengthens the arc and forces it into intimate contact with cool dielectric material. A sturdy, reliable operating mechanism assures low maintenance and long life.

The AM-4.16 magne-blast breaker is available in a number of current ratings. Refer to the breaker nameplate for the complete rating information of any particular breaker. The short circuit conditions to be imposed on the breaker must not exceed its rating, nor should it be called upon to operate at voltages or currents greater than those given on the nameplate. Since this book is written to cover several ratings of breakers that are of the same general design, all instructions will be of a general character and all illustrations will be typical, unless otherwise specified.

Proper installation and maintenance are necessary to insure continued satisfactory operation of the breaker. The following instructions will provide complete information for placing magne-blast breakers in service and for maintaining satisfactory operation.

RECEIVING, HANDLING AND STORAGE

RECEIVING AND HANDLING

Each breaker is carefully inspected and packed by workmen experienced in the proper handling and packing of electrical equipment. Immediately upon receipt of the circuit breaker, an examination should be made for any damage sustained in transit. If injury or rough handling is evident, a damage claim should be filed immediately with the transportation company and the nearest Canadian General Electric Sales Office should be notified.

It is expected that due care will be exercised during the unpacking and installation of the breaker so that no damage will occur from careless or rough handling, or from exposure to moisture or dirt. Loose parts associated with the breaker are always included in the same crate. Check all parts against the packing list to be sure that no parts have been overlooked.

STORAGE

It is recommended that the breaker be put into service immediately in its permanent location. If this is not possible, the following precautions must be taken to insure the proper storage of the breaker:

The breaker should be carefully protected against condensation, preferably by storing it in a warm dry room, since water absorption has an adverse effect on the insulation parts. Circuit breakers for outdoor metal-clad switchgear should be stored in the equipment only when power is available and the heaters are in operation to prevent condensation.

The breaker should be stored in a clean location, free from corrosive gasses or fumes; particular care should be taken to protect the equipment from moisture and cement dust, as this combination has a very corrossive effect on many parts.

*Letter designation B, C, H, and R, used immediately following the model number indicates basic design differences.

achined parts of the operating mechanism, etc., ould be coated with a heavy oil or grease to event rusting.

the breaker is stored for any length of time, it should be inspected periodically to see that rusting has not started and to insure good mechanical condition. Should the breaker be stored under unfavorable atmospheric conditions, steps should be taken to dry out the breaker before it is placed in service.

INSTALLATION

PROCEDURE

emove the box barrier and front cover and make a sual inspection to ascertain that the breaker and echanism is in satisfactory condition. Check all earing surfaces of the mechanism for lubrication. efer to section on Lubrication.

harge the breaker closing springs manually using a tchet wrench to turn the driving eccentric (6, gure 4). Turning the eccentric counter clockwise ill advance the ratchet wheel and compress the prings.

hen the springs have reached the fully charged po- tion the indicator (6, figure 2) will read CHARGED, nd the driving pawl will be raised from the ratchet heel teeth. Additional turning of the eccentric will ot advance the ratchet wheel.

sert the spring blocking device (4, figure 4) and anually discharge the springs against the pins by ushing the manual close button (1, figure 4). The prings are now blocked and slow closing of the reaker contacts can be accomplished by again rning the driving eccentric with a ratchet wrench.

uring the slow closing operation check to insure at the mechanism does not stick or bind during the ntire stroke, that it latches securely in the closed osition, and that it trips freely when the manual ip lever is operated. The breaker should not be perated electrically until it has been operated everal times manually to insure freedom of action. this time, also check the following adjustments nown in the CORRECTIVE MAINTENANCE section.

a) Primary contact wipe,
b) Arcing contact wipe,
c) Primary contact gap.

WARNING

DO NOT WORK ON EITHER THE BREAKER OR MECHANISM UNLESS THE CLOSING SPRINGS ARE BLOCKED AND THE OPENING SPRINGS HAVE BEEN TRIPPED OR MECHANICALLY BLOCKED. THIS PRECAUTION IS REQUIRED TO PREVENT ACCIDENTAL CLOSING OR TRIPPING.

After the adjustments have been checked, the springs can be unblocked. Rotate the driving eccentric until the indicator reads CHARGED and the ratchet wheel no longer is advanced. The blocking device can now be removed.

Attach the test coupler to the circuit breaker and operate electrically several times. Check the control voltage as described under Control Power Check.

NOTE

If the breaker secondary wiring is to be given a hi-potential test at 1500 volts, remove both the motor leads from the terminal connection. Failure to disconnect the motor from the circuit may cause damage to the winding insulation.

Remove the test coupler and replace the box barrier.

If the breaker has been stored for a long period of time, it is recommended that the insulation be checked with a standard 60 cycle high potential test. Refer to Insulation Test.

Lubricate the silver portion of the primary disconnect studs by rubbing a small amount of contact lubricant D50H47 to form a thin coating on the ball contact.

Refer to metalclad instruction book PGEI-1202 for final instructions before inserting the breaker into the metalclad unit.

ADJUSTMENTS

In order to perform the adjustments refer to Adjustments under CORRECTIVE MAINTENANCE.

DESCRIPTION OF OPERATION

GENERAL

The magne-blast breaker is composed of two major parts, the breaker element and the operating mechanism. The breaker element comprises three similar pole units, each pole unit consisting of main and arcing contacts, an interrupter, and an enclosing box barrier that segregates the interrupting units from each other to provide insulation between phases as well as from each phase to ground. The primary connections to the associated metalclad equipment are made through the primary disconnect studs.

The ML-13 operating mechanism shown in figures 1, 2, and 3 is of the stored energy type designed to give high speed closing and opening. The mechanism will operate on AC or DC voltage as indicated on the breaker nameplate. Closing and opening operations are controlled electrically by the metal-clad or remote relaying, and mechanically by the manual close and trip levers on the breaker. All secondary connections from the breaker to the metalclad unit are made through the secondary coupler (1, figure 1).

A positive interlock roller (2, figure 3) and interlock switch (2, figure 1) are provided between the breaker and metal-clad unit to prevent raising or lowering of the breaker in the unit while in a closed position and to prevent a closing operation when the breaker is not in either the fully raised or lowered position. A plunger can also be provided to operate an additional auxiliary switch mounted in the metal-clad unit.

A spring release interlock shown in figure 21 will, if the breaker is in the closed position with closing springs charged, trip the breaker open and hold the mechanism in a trip free position while discharging the closing springs when inserting or removing the breaker from the metalclad unit.

When the breaker is interchangeable with MS-10D solenoid operated breakers in M-26 metalclad units, motor circuit fuses are mounted on the breaker for protection. These breakers are identified by the "C" suffix in the breaker nomenclature. Breakers not required to interchange with solenoid operated breakers (MS-10D) in M-26 metalclad units are identified by the "H" suffix in the breaker nomenclature. Protective fuses for the motor circuit of these breakers are mounted on the metalclad front enclosure side sheet.

SPRING CHARGING

The mechanism consists of a high speed gear motor that compresses a set of closing springs through the action of a simple eccentric, ratchet, and pawl assembly. The rotary action of the motor (2, figure 4) is converted to a short straight stroke pumping action through the eccentric (6) and a lever that carries a spring loaded driving pawl (5).

The pawl advances the ratchet wheel (3, figure 3) only a few degrees each stroke where it is held in position by the latching pawls (1). When the ratchet wheel has been rotated approximately 180 degrees the closing springs (6) will be fully compressed. As the ratchet wheel continues to rotate, the spring load will shift over center and attempt to discharge. After only a few degrees of rotation, the closing latch roller (10, figure 1) will engage the closing latch (11) and the compressed springs will be held in repose until a closing operation is required. During the last few degrees of the ratchet wheel rotation the motor and interlock switches (6) are released and the driving pawl is raised from the ratchet wheel surface. This allows the motor and driving mechanism to coast to a natural stop expending all residual energy.

During the time the springs are being compressed a relay (6, figure 6) locks the closing power circuits open and the relay will remain energized until the springs are fully charged and the control contacts are re-set.

The closing springs may be charged manually if control voltage is lost. A ratchet wrench can be used to rotate the eccentric in a counter clockwise direction until the indicator reads CHARGED and the driving pawl no longer engages the ratchet wheel. The use of the ratchet wrench provides for maximum safety in the event that control power is suddenly restored without warning. In this event, the motor drive will take over again and continue to charge the springs.

CLOSING OPERATION

Closing the breaker is accomplished by energizing the closing solenoid or by manually pressing the close button. In either case, the closing latch is removed from the spring blocking location allowing the springs to discharge. The energy of the springs is applied to the rotation of a cam (16, figure 5) that closes the breaker through a simple linkage that remains trip-free at all times. A monitoring switch (11, figure 6) on the closing latch will start the spring charging motor after it is fully reset.

OPENING OPERATION

An electrical opening operation is initiated by energizing the trip coil. This is accomplished either by actuating the opening control switch on the metal-clad unit or by a combination of relays and current devices used to detect a fault on the load side of the

reaker. By energizing the trip coil, the trip plunger otates the trip latch (7, figure 5), causing the oper- ting mechanism linkage to collapse. The energy tored in the opening springs is thus released, pening the breaker. During this operation, the trip oil circuit is de-energized, and upon completion f the opening operation, the operating mechanism s returned to its normal position, ready for closing.

As the breaker opens, the main contacts part first, hunting the current through the arcing contacts. An rc forms as the arcing contacts part. See figure 7. As the movable arcing contact (7) is withdrawn hrough the probes on the arc runner, the upper end f the arc is transferred to the upper arc runner (4). To assist the interruption at this point, a stream of ir is emitted from the booster tube (25) and forces he arc onto the lower arc runner (8). Establish- ment of the arc on the runners automatically inserts he blowout coil into the circuit, introducing a nagnetic field between the pole pieces which tends o draw the arc away from the arcing contacts. The nterrupter contains one upper blowout coil and one ower blowout coil each connected with its respective rc runner. The arc is forced outward along the diverging arc runner by the magnetic field.

At the same time, the arc is being forced into the arc chute (3) which is composed of a series of gradually interleaving insulating fins. These fins, which project alternately from the two opposite inner surfaces of the chute, elongate the arc into a gradually deepening serpentine path, so that the electrical resistance in the path of the arc is rapidly increased and the heat from the arc is absorbed. The increased resistance reduces both the magnitude and the phase angle of the current, and at an early current-zero the arc path is so long and the gases produced by the arc so cooled that the arc cannot re-establish itself and interruption occurs.

Manual tripping follows the same procedure except that instead of energizing the trip circuit, the manual trip (11, figure 2) is used.

TRIP FREE OPERATION

If the trip coil circuit is energized while the breaker is closing, the trip plunger will force the trip latch (8, figure 5) away from the trip roller (9) causing the mechanism linkage to collapse and the breaker to re-open. The closing cam (16) will complete its closing stroke and the springs will re-charge as in a normal closing operation.

PREVENTIVE MAINTENANCE

Dependable service and safer power equipment are contingent upon the unfailing performance of the power circuit breaker. To maintain such service, it is recommended that a definite inspection and maintenance schedule be set up and followed, as serious shutdowns can often be avoided by locating potential sources of trouble in an early stage. A periodic lubrication of parts subject to wear is also vitally important for the successful operation of the breaker.

WARNING

BEFORE ANY MAINTENANCE WORK IS PERFORMED, MAKE CERTAIN THAT ALL CONTROL CIRCUITS ARE OPENED AND THAT THE BREAKER IS REMOVED FROM THE METAL-CLAD UNIT. DO NOT WORK ON THE BREAKER OR MECHANISM WHILE IN THE CLOSED POSITION UNLESS THE PROP AND TRIP LATCH HAVE BEEN SECURELY WIRED OR BLOCKED TO PREVENT ACCIDENTAL TRIPPING. DO NOT WORK ON THE BREAKER OR MECHANISM WHILE THE SPRINGS ARE CHARGED UNLESS THEY ARE SECURED IN THAT POSITION BY THE MAINTENANCE SPRING BLOCKING DEVICE.

PERIODIC INSPECTION

The frequency of periodic inspection should be determined by each operating company on the basis of the number of operations (including switching), the magnitude of currents interrupted, and any unusual operations which occur from time to time. Operating experience will soon establish a maintenance schedule which will give assurance of proper breaker condition.

On installations where a combination of fault duty and repetitive operation is encountered, an inspection is recommended after any severe fault operation. The following instructions list the main points to be included in an inspection and a number of general recommendations.

ARC CHUTES

It is not necessary to inspect the arc chutes unless there is evidence of damage or if the arc chutes are removed for any reason. When inspecting an arc chute, it should be disassembled and the following points noted:

Scale formed over the surface of the arc chute must not be removed, but loose particles collected in the chute should be blown out.

Cracks which have formed in the fins of the arc chute are to be expected in ceramic materials of this type when subjected to the severe heat of an arc. These cracks do not interfere with the operation of the device in any way and should be disregarded.

If the arc chute has suffered any mechanical injury due to dropping or accidental striking, resulting in the actual breaking off of fins, replacement of the chute will be necessary. Small broken corners on the exhaust end of the chute will not interfere with its performance and can also be disregarded.

The plastisol flexible covering for the pole pieces (3 and 16, figure 15) should be inspected for breaks in the insulation. If there are holes or breaks in the insulation they should be repaired or the part replaced.

BREAKER CONTACTS

By removing the box barrier the movable and stationary primary contacts and the movable arcing contacts can be inspected. The stationary arcing contacts can be inspected after removing the arc chute assembly as explained under Repair and Replacement. If the contacts are burned or pitted, they should be made smooth with a fine file.

After completing inspection of the contacts, check the contact adjustments as specified under Adjustments.

MECHANISM

A careful inspection should be made to check for loose nuts or bolts and broken retaining rings. All cam, roller, and latch surfaces should be inspected for any evidence of damage or excessive wear. Lubricate the mechanism as outlined below, then, using the manual charging wrench, open and close the breaker several times to make certain that the mechanism operates freely throughout its entire stroke. Check the mechanism adjustments as specified under Adjustments. Check all terminal connections.

BUSHINGS AND INSULATION

The bushings should be wiped clean to remove any accumulated dirt and dust. If the moulded insulation should be damaged it should be filled with epoxy, allowed to cure and sanded to match the original contour of the bushing.

All other insulation parts on the breaker should be kept clean and dry. Smoke or dust collected between inspection periods should be wiped off, and if dampness is apparent, heaters should be installed to insure dryness.

INSULATION TEST

When insulation has been repaired or replaced, or when the breaker has been stored under adverse conditions, it is recommended that the insulation be checked before the breaker is placed in service. A standard 60 cycle high potential test at 14,000 volts RMS will normally indicate whether the breaker is satisfactory for service. With the breaker contacts in the fully open position, apply the high potential to each terminal of the breaker individually for one minute with all other terminals and the breaker frame grounded. After high potential tests are made on organic insulation materials, these materials should be inspected for visible leakage current paths, and necessary action must be taken to replace insulation that may have been affected by moisture absorption.

If the breaker secondary wiring is to be given a hi-potential test at 1500 volts, remove both of the motor leads from the terminal boards. Failure to disconnect the motor from the circuit may cause damage to the winding insulation.

LUBRICATION

In order to maintain reliable operation, it is important that all circuit breakers be properly lubricated at all times. Most of the bearings and rolling surfaces utilize a new type of dry lubrication that will require no maintenance and will last the life of the equipment. Only a few of the bearings and surfaces listed in the lubrication chart require lubrication. These have been properly lubricated, during assembly at the factory, using the finest grades of lubricants available. However, even the finest oils and greases have a tendency to oxidize with age, as evidenced by hardening and darkening in color. Elimination of the hardened lubricant is essential for the proper operation of circuit breakers. Also frequent operation of the breaker causes the lubricant to be forced out from between the bearing surfaces. A simple lubrication will often clear up minor disturbances which might be mistaken for more serious trouble.

A definite lubrication schedule should be set up taking into consideration the frequency of operation of the breaker and local conditions. Until such a schedule is worked out, the breaker should be lubricated at each periodic inspection and also whenever it is overhauled, in accordance with the lubrication chart. It is also recommended that all circuit breakers be operated at regular intervals to insure the user that the equipment is operating freely.

The lubrication chart is divided into two methods of lubrication. The first method outlines the maintenance lubrication which should be performed at the time of periodic maintenance, and requires no disassembly. The second method outlines a lubrication procedure similar to that performed on the breaker at the factory, but should be used only in case of a general overhaul or disassembly for other reasons, or if the operation of the breaker becomes slower.

eneral Electric Lubricants D50H15 and D50H47 e available in 1/4 pound collapsible tubes. It is so ckaged to insure cleanliness and to prevent idation.

ETHOD OF CLEANING BEARINGS
henever cleaning is required, as indicated on the brication chart, the following procedures are ecommended.

eeve Bearings
ne sleeve bearings used throughout the linkage ilize Textolite surfaces and require only light brication. If contaminants are present they should e removed by immersing the link and bearing in ean petroleum solvent or similar cleaner and using stiff brush. Do not remove the bearings from the nks.

WARNING

DO NOT USE CARBON TETRACHLORIDE.

he hinge of the primary contact arm (24, figure 7) hould be disassembled, cleaned, and lubricated with E D50H47 lubricant at general overhaul periods.

he main shaft bearings (24, figure 5) and the driving awl lever bearing should be removed, cleaned, and ubricated with GE D50H15 lubricant at general verhaul periods.

oller and Needle Bearings
he cam follower bearings (6, figure 5), latch roller earing (9), and cam shaft bearings (25, figure 5) hould be removed from the mechanism and the nner race disassembled. They should then be placed n a container of clean petroleum solvent or similar leaner.

WARNING

DO NOT USE CARBON TETRACHLORIDE.

f the grease in the bearings has become badly xidized, it may be necessary to use alcohol (type sed for thinning shellac) to remove it. Ordinarily, y agitating the bearings in the cleaning solution, and sing a stiff brush to remove the solid particles, the earings can be satisfactorily cleaned. After the earings have been thoroughly cleaned, spin them in lean new light machine oil until the cleaner or solvent is entirely removed. Allow this oil to drain ff and then repack them immediately with GE ubricant D50H15 being sure all metal parts are greased.

NOTE
If it becomes necessary to clean the bearings in alcohol (shellac thinner), be sure the alcohol is perfectly clean, and do not allow the bearings to remain in the alcohol more than a few hours. If it is desirable to leave the bearings in the alcohol for a longer time, an inhibited alcohol such as is used for anti-freeze should be used. Even then the bearings should be removed from the alcohol within twenty-four hours. Esso Anti-Freeze and Du Pont Zerone are satisfactory for this purpose. Precautions against the toxic effects of the alcohol must be exercised by wearing rubber gloves and by using the alcohol in a well ventilated room; excessive exposure to the fumes is sometimes unpleasant to personnel. Washing the bearings in the light oil and draining should follow immediately, they apply the lubricant.

Bearings that are pressed into the frame or other members such as the eccentric drive bearings (2, figure 14) should not be removed. After removing the shaft and inner race the bearing can usually be cleaned satisfactorily with petroleum solvent or a similar cleaner and a stiff brush. Follow the procedure outlined above using a light machine oil and GE lubricant D50H15 before reassembling the inner race and shaft.

Rolling Surfaces
A number of rolling and rubbing surfaces in the mechanism have been lubricated with a baked-on, dry, molybdenum disulfide coating. This requires no maintenance and should last the life of the breaker.

MAINTENANCE FOR REPETITIVE SWITCHING DUTY

GENERAL
Magne-blast breakers applied to repetitive operation such as switching arc furnaces and motors should be serviced and maintained according to the following schedule.

EVERY 2000 OPERATIONS, OR SEMI ANNUALLY (WHICHEVER COMES FIRST)
Remove the box barriers.

Wipe all insulating parts clean of smoke deposit and dust with a clean dry cloth, including the bushings, and the inside of the box barriers.

All areas in the throat area of the arc chute should be thoroughly cleaned by using sandpaper. This cleaning should be performed any time the arc chute is removed. The arc chute fins should not be cleaned. Whenever the arc chute is removed, loose dust and dirt should be blown out before replacing arc chutes.

Primary Contacts
Inspect the condition of the stationary contact fingers and movable contact blocks. Badly pitted or burned contacts should be replaced.

NOTE

Burned primary contacts indicate the probable need for arcing contact replacement.

If the contact surfaces are only roughened or galled, they should be smoothed with crocus cloth or draw filed.

Arcing Contacts

When the arcing contact wipe is less than the minimum specified under Adjustments, the contacts should be replaced. The contacts should be inspected for uneven wear and/or damage using a mirror to inspect the stationary contacts. Normally it will not be necessary to remove the arc chutes for this 2000 operation servicing unless an inadequate wipe or contact condition indicates a need for replacement. When the arc chutes are removed, the contact braids, coil protectors, and other parts subject to arcing should be checked for possible cleaning or replacement. Do not grease the arcing contacts under any circumstances.

Check the breaker and mechanism adjustments as summarized under Inspection and Test. The necessary readjustments should be made as described under Adjustments.

The breaker and operating mechanism should be carefully inspected for loose nuts, bolts, retaining rings, etc. All cam, latch and roller surfaces should be inspected for damage or excessive wear. The buffer blocks and their retainers on the bottom of the stationary contact support should be inspected for possible need of replacement.

The contacts of the control relay should be inspected for wear and cleaned if necessary.

The contacts of the auxiliary switch should be inspected for wear and cleaned if necessary.

Lubricate the breaker operating mechanism in accordance with the table under Lubrication.

Inspect all wiring for tightness of connections and possible damage to insulation.

After the breaker has been serviced, it should be slowly closed and opened, as described in Installation, to be sure there is no binding or friction and that the breaker contacts can move to the fully opened and fully closed positions. Its electrically operation should then be checked using either a test cabinet or the test couplers.

EVERY 10,000 OPERATIONS

In addition to the servicing done each 2,000 operations, the arc chutes should be removed from the breaker and disassembled to permit a detailed inspection of insulation, blow-out coils, arc runners and assemblies which can become contaminated by arc products.

The blow-out coils should be carefully examined and if the insulation has been cracked, shrunk or eroded from arc action and heat so that the turns of the coils are not fully insulated from each other, the coils should be replaced. All connections should be checked for tightness.

The arc runners should be inspected and replaced when any part of their area has been reduced to 25% of the original metal thickness as a result of arc erosion.

Check the stationary arc contacts to assure that the arcing contacts are in good condition and that their connections are tight.

Insulating material that is carbonized and cannot be satisfactorily cleaned should be replaced.

Any parts damaged or severely burned and/or eroded from arc action should be replaced.

NOTE

Fine cracks may develop in the fins of the arc chute sides. This is to be expected with ceramic materials when subjected to the high heat of an arc and may be disregarded unless they are long and present a possibility of fin sections breaking completely off. Small broken corners on the exhaust end of the arc chute will not interfere with its performance and can also be disregarded.

The cup bearing and the contact ring at the hinge point of the contact blade should be disassembled, inspected, cleaned, and relubricated with GE contact lubricant D50H47. The contact ring should be inspected for wear and replaced when reduced in thickness to less than 1/32 inch.

EVERY 20,000 OPERATIONS OR EVERY FIVE YEARS (WHICHEVER COMES FIRST)

At this time the breaker should be given a general overhaul and all excessively worn parts in both the mechanism and breaker replaced. Such wear will usually be indicated when the breaker cannot be adjusted to instruction book tolerances. This overhaul and inspection is more detailed and will require disassembly of mechanism and breaker operating parts.

All roller and needle bearings in the operating mechanism should be disassembled, cleaned, and repacked with GE lubricant D50H15 as described under Lubrication.

The stationary primary contact fingers should be disassembled and the silver-plated pivot area of the contact and contact support cleaned and lubricated with GE lubricant D50H47.

The breaker and operating mechanism should be

rviced as described for every 2,000 operations and operly adjusted before being put back into service.

NOTE
Magne-blast breakers applied to repetitive operation, such as capacitor switching, should be cleaned as described for every 2,000 operations at intervals of not more than 500 operations.

LUBRICATION CHART

PART	LUBRICATION AT MAINTENANCE PERIOD	ALTERNATE LUBRICATION (REQUIRES DISASSEMBLY)
Sleeve Bearings - links, trip shaft, etc. (Textolite bearings)	No lubrication required	Wipe clean and apply thin film of D50H15
Sleeve Bearings - main crank shaft, driving pawl lever. (Bronze or cast iron)	Light application of machine oil SAE 20 or SAE 30.	Remove bearings or links, clean per instructions and apply D50H15 lubricant liberally.
Contact Arm Hinge Assembly Cup Bearing Loose rings between bushing and contact arm.	No lubrication required	Wipe clean and apply D50H47.
Roller and Needle Bearings	Light application of machine oil SAE 20 or SAE 30.	Clean per instructions and repack with D50H15 lubricant.
Ground surfaces such as cams, ratchet teeth, etc., (Surfaces coated with MoS_2)	No lubrication required	No lubrication required.
Ground surfaces such as latches, rollers, prop, etc.	Wipe clean and apply D50H15 lubricant.	Wipe clean and apply D50H15 lubricant.
Primary disconnect studs.	Wipe clean and apply D50H47.	Wipe clean and apply D50H47.
Booster Cylinder	Wipe clean and apply thin film of D50H15	
Arcing contacts	Do not lubricate	Do not lubricate

CORRECTIVE MAINTENANCE

ADJUSTMENTS

All adjustments should be checked during periodic inspections and whenever it becomes necessary to repair or replace parts that have become worn or defective while in service. The following adjustments are listed in the order in which they are to be checked. First, however, remove the breaker from the metalclad unit and remove the box barriers and front cover.

ARCING CONTACT WIPE
Refer to figure 8. Close the breaker until the arcing contacts just touch. This can be determined with the use of a circuit continuity tester such as a light indicator or bell set. In this position, the gap between the stationary primary contacts (1) and the movable primary contact (2) should be 5/16 inch or greater. This setting has been made in the factory and no adjustment is provided. A wipe of less than 5/16 inch is usually an indication that the arcing contacts need to be replaced. When making this check, also see that the movable arcing contact (5) passes through the probes on the upper arc runner without touching.

PRIMARY CONTACT WIPE
When the breaker is closed, as shown in figure 8, the stationary primary contacts (1) should rise 5/16 inch plus 0 minus 1/16 inch. Before checking this dimension be sure the mechanism is re-set so that the prop pin (13, figure 5) is resting on the prop. To obtain the proper contact adjustment, open the breaker and, referring to figure 9, loosen the check nut (4) and turn the adjusting nut (3). Screwing up on the adjusting nut will decrease the primary contact wipe, down will increase it. Tighten the check nut, close the breaker and recheck the wipe. With the primary contact wipe correctly adjusted, the clearance between the contact arm (6, figure 8) and the buffer block (3) should be 1/16 inch or greater when the breaker is fully closed.

WARNING

DO NOT WORK ON EITHER THE BREAKER OR MECHANISM UNLESS THE CLOSING SPRINGS ARE BLOCKED AND THE OPENING SPRINGS HAVE BEEN TRIPPED OPEN OR MECHANICALLY BLOCKED. THIS MEASURE IS REQUIRED TO PREVENT ACCIDENTAL CLOSING OR TRIPPING.

PRIMARY CONTACT GAP
Refer to figure 9. With the breaker closed, press the manual trip button allowing the breaker to trip open normally. Do not force the contacts open wider by hand. The gap between the stationary primary contacts (5) and the movable primary contact (6) should be 3-13/16 inch plus 1/8 inch minus 3/16 inch. To change this gap, loosen the check nut (17, figure 5) and turn the adjusting nut (18) on stud (19). Screwing the adjusting nut down will decrease the primary contact gap. Tighten the check nut and remeasure the contact gap (close and trip the breaker before checking the measurement).

TRIP LATCH WIPE
Refer to figure 5. The wipe of the trip latch (8) on the trip roller should be from 3/16 inch to 1/4 inch. This can be measured by putting a film of grease on the latch (8), closing the breaker part way, and tripping. The mechanism has the proper trip latch wipe when the latch rests against the stop pin (23). No adjustment is provided and a visual inspection is usually all that is required. If this setting is not correct, look for insufficient travel of the trip shaft (7).

WARNING

WHEN WORKING ON THE MECHANISM IN THE CLOSED POSITION, KEEP FINGERS CLEAR OF THE LINKAGE, AS ACCIDENTAL TRIPPING CAN CAUSE SEVERE INJURY.

TRIP LATCH CLEARANCE
Refer to figure 5. With the breaker in the tripped position and the closing springs charged, check the clearance between the trip latch (8) and the trip roller (9). It should measure 1/32 inch to 1/16 inch.

PROP CLEARANCE
Refer to figure 5. With the breaker closed as far as possible, that is, with the springs blocked and the cam (16) rotated so that the prop pin (13) is at its maximum height over the prop (14), the clearance between the prop and prop pin should be 1/16 inch to 5/32 inch. No adjustment is provided and a visual inspection is usually all that is required.

RELEASE LATCH WIPE
Refer to figure 6. The wipe between the release latch (3) and roller (2) should be 3/16 inch to 5/16 inch. If re-setting is required, loosen, set, and re-tighten adjustment nut and screw (4).

RELEASE LATCH MONITORING SWITCH
The release latch must be fully re-set and the monitoring switch operated before the motor will start. The switch should be wiped by the striker so that the clearance between the striker and switch mounting bracket (20, figure 6) is 1/32 inch or less. To obtain this adjustment bend the switch striker. Be sure the latch is fully re-set before making any adjustments.

OTOR AND RELAY SWITCHES
th the closing springs blocked rotate the switch
m (1, figure 6) until the switch striker (8) has
aveled the maximum amount (about 180 degrees
tation of cam). Loosen mounting bolt (14) and
tate switch support (15) until the gap between the
iker (8) and support (15) is 1/32 inch or less.

TERLOCK SWITCH WIPE
fer to figure 10. Rotate the positive interlock shaft
manually clockwise to release the interlock switch
m (2). The point at which the contacts make can be
termined with a circuit continuity tester such as a
ht indicator or bell set. To obtain adjustment on
e interlock switch (3), bend the interlock switch
m (2) until there is a maximum of 1/32 inch
earance to the switch support (4).

UXILIARY SWITCH
ie auxiliary switch (9, figure 11) is mounted on the
ft side of the operating mechanism. The shaft of
e position indicator (8) operates the auxiliary
vitch shaft which opens and closes the "a" and "b"
ntacts. The "a" contacts are open when the breaker
open and the "b" contacts are open when the
eaker is closed. The "a" contacts should close
ien the breaker primary contact gap is a minimum
1 inch. The "b" contacts need only to be checked
see that they are open when the breaker is closed.
adjustment is provided and a visual inspection is
ually all that is required.

RIVING PAWL ADJUSTMENT
ie driving pawl (5, figure 4) must advance the
tchet wheel (3, figure 3) sufficiently on each stroke
allow the latching pawls (1) to fall into the ratchet
eth. This should be checked with the maximum
osing spring load against the driving members.
ith the mechanism unblocked, hand charge the
osing springs with the manual charging wrench
til they are slightly more than half charged. Slowly
tate the charging wrench until the driving pawl (5,
gure 4) has traveled through its return stroke and
ieck the maximum clearance between the pawl and
e ratchet tooth. Rotate the charging wrench until
e driving pawl has advanced the ratchet tooth to its
aximum travel. Now check the clearance between
e ratchet tooth and the latching pawl (1, figure 3).
ie clearance should be approximately equal for both
e driving and latching pawls and not less than .015
ch in either case.

adjustment is required for either pawl the springs
ust first be fully charged and blocked. Loosen seven
otor support bolts (1, figure 14) and move entire
otor assembly to the rear if the clearance is under
e minimum at the latching pawls, and to the front if
e clearance is under the minimum at the driving
wl. Move the motor assembly approximately twice
e dimensional increase required at the pawl. Be
rtain the motor assembly is moved straight
rward or rearward and tighten the one bolt on the
ght side of the mounting frame first to assure
oper alignment. After tightening the remaining bolts the springs should be released and the clearance again checked as described above.

AUXILIARY DEVICES
Latch Checking Switch
Refer to figure 12. Rotate the trip latch (4) clockwise (looking at the left side of the mechanism) by pressing the manual trip lever to open the latch checking switch operating arm (3). Allow the trip latch to reset slowly and determine the point at which the contacts make by using a circuit continuity tester, such as a light indicator or bell set. The contacts of the latch checking switch should just make when the gap between the trip latch (4) and the stop pin (5) located on the crank (7) is 1/16 inch. There should be a minimum of 1/64 inch clearance between the operating arm (3, figure 12) and the switch (2). To attain this clearance bend the latch checking switch operating arm (3).

Plunger Interlock
Refer to figure 13. With the breaker in the closed position, the vertical distance "A" from the top of the interlock bolt (1) to the bottom of the elevating pin (3) should be 11.82 inches plus or minus 1/16 inch. To change this adjustment, loosen check nut (2), raise or lower bolt (1) as required and tighten check nut to lock.

Auxiliary Fuses
Refer to figure 6. On breakers with "C" suffix, a set of protecting fuses (13) are mounted on the front of the breaker. These fuses will be the primary protection devices for the closing control circuits on those breakers that are used in metalclad units designed for solenoid operated breakers.

Inspection and Test
For ease in reviewing the adjustments, the following are recapitulated:

a) Arcing contact wipe: 5/16 inch or greater (gap at primary contacts).
b) Primary contact wipe: 5/16 inch plus 0 minus 1/16 inch.
c) Primary contact gap: 3-13/16 inch plus 1/8 inch minus 3/16 inch.
d) Trip latch wipe: 3/16 inch to 5/16 inch with trip latch resting against stop pin.
e) Trip latch clearance: 1/32 inch to 1/16 inch.
f) Prop clearance: 1/16 inch to 5/32 inch.
g) Release latch wipe: 3/16 inch to 1/4 inch.
h) Release latch monitoring switch: Maximum clearance 1/32 inch.
i) Motor and relay switch: maximum clearance 1/32 inch.
j) Interlock switch: maximum clearance 1/32 inch.
k) Auxiliary switch "a" contacts close when breaker primary contact gap is 1 inch or greater.
l) Driving and Latching Pawl: minimum clearance to ratchet teeth .015 inch.
m) Latch checking switch contacts make when the gap between the trip latch and the stop pin is 1/16 inch.

n) Plunger interlock: 11.82 inch plus or minus 1/16 inch.

Check all nuts, washers, bolts, cotter pins, and terminal connections for tightness.

Inspect all wiring to make sure that no damage has resulted during installation, and test for possible grounds or short circuits.

See that all bearing surfaces of the mechanism have been lubricated. Refer to the section on Lubrication.

Operate the breaker slowly with the manual charging wrench and note that there is no excessive binding or friction and that the breaker can be moved to the fully opened and fully closed positions.

See that any place where the surface of the paint has been damaged is repainted immediately.

Check the trip coil plunger and the release coil plunger to see that they move freely.

Opening and Closing Speeds
The closing speed of the arcing contact of the breaker should be a minimum of 11 feet per second. This represents the average speed of the movable arcing contact from a point one inch before the tip is tangent to the lower surface of the probes on the upper arc runner to the tangent position.

The opening speed of the arcing contact should be a minimum of 12 feet per second. This represents the average speed over 3 inches from the point when the tip on the movable contact is tangent to the lower surface of the probes on the upper runner.

Control Power Check
After the mechanism has been closed and opened slowly several times with the maintenance closing wrench and the mechanism adjustments are checked as described, the operating voltages should be checked at the release coil, trip coil, and motor terminals. For electrical operation of the mechanism, the control power may be either an alternating or direct current source. The operating ranges for the closing and tripping voltages are given on the breaker nameplate. The following ranges are standard:

Nominal Voltage	Closing Range		Tripping Range	
	Min.	Max.	Min.	Max.
48V DC	36 -	52V DC	28 -	60V DC
110V DC	80 -	115V DC	60 -	125V DC
125V DC	90 -	130V DC	70 -	140V DC
220V DC	160 -	230V DC	120 -	250V DC
250V DC	180 -	260V DC	140 -	280V DC
115V AC	95 -	125V AC	95 -	125V AC
230V AC	190 -	250V AC	190 -	250V AC

If the closed circuit voltage at the terminals of the coil or motor does not fall in the specified range, check the voltage at the source of power and line drop between the power source and breaker.

When two or more breakers operating from the same control power source are required to close simultaneously, the closed circuit voltage at the closing coil or motor of each breaker must fall within the specified limits.

Electrical closing or opening is accomplished by merely energizing the closing or trip coil circuit. Control switches are provided for this purpose on the metalclad unit. It is also possible to trip or close the breaker manually by pressing the manual trip lever (11, figure 2) or the manual close button (7).

Before the breaker is finally raised into position in the metalclad unit, rub a small amount of GE contact lubricant D50H47 on the silvered portion of the breaker studs to form a thin coating for contacting purposes.

TROUBLESHOOTING

Failure of a breaker to operate properly will generally fall within four general classes; failure to trip, failure to close or latch closed, closing springs will not recharge, and overheating. The Troubleshooting Chart is a brief outline showing particular types of distress that might be encountered, together with suggestions for remedying the trouble.

REPAIR AND REPLACEMENT

The following information covers in detail the proper method of removing various parts of the breaker in order to make any necessary repairs. This section includes only those repairs that can be made at the installation on parts of the breaker that are most subject to damage or wear.

CAUTION

Upon completion of any repair work, all breaker and mechanism adjustments must be checked. Refer to the section on Installation, paying particular attention to Adjustments and Final Inspection.

ARC CHUTE
To remove an arc chute, first trip the breaker and remove the box barrier (2, figure 7). Loosen the two upper supporting bolts (2, figure 18) and the one lower supporting bolt (9, figure 18) using a 3/4 inch wrench. By raising the complete arc chute assembly about 3/8 inch and sliding it toward the rear of the breaker, it can be removed as shown in figure 18.

To disassemble the arc chute after it has been removed from the breaker, proceed as follows:

TROUBLESHOOTING CHART

FAULT	CAUSE	CORRECTIVE ACTION
1. Failure to Trip	a. Mechanism binding or sticking caused by lack of lubrication.	Lubricate complete mechanism.
	b. Mechanism binding or sticking caused by being out of adjustment.	Check all mechanism adjustments, latches, stops, auxiliary devices, etc., in accordance with section on Adjustments. Examine latch and roller surfaces for corrosion.
	c. Damaged trip coil.	Replace damaged coil.
	d. Blown fuse in trip circuit.	Replace blown fuse after determining cause of failure.
	e. Faulty connections in trip circuit.	Repair broken or loose wires and see that all binding screws are tight.
	f. Damaged or dirty contacts in trip circuit.	Recondition or replace contacts.
2. Failure to Close or Latch Closed	a. Mechanism binding or sticking caused by lack of lubrication.	Lubricate complete mechanism.
	b. Mechanism binding or sticking caused by being out of adjustment.	Check all mechanism adjustments, latches, stops, auxiliary devices, etc., in accordance with section on Adjustments. Examine latch and roller surfaces for corrosion.
	c. Damaged or dirty contacts in control circuit including control relay.	Recondition or replace contacts.
	d. Damaged spring release coil.	Replace damaged coil.
	e. Defective latch-checking switch, or interlock switch.	Replace defective switch.
	f. Blown fuse in closing circuit.	Replace blown fuse after determining cause of failure.
	g. Faulty connections in closing circuit.	Repair broken or loose wires and see that all binding screws are tight.
	h. Insufficient control voltage caused by excessive drop in leads.	Install larger wires and improve electrical contact at connections.

TROUBLESHOOTING CHART (CONT'D)

FAULT	CAUSE	CORRECTIVE ACTION
2. (Continued)	i. Insufficient control voltage caused by poor regulation (AC control).	Install larger control transformer.
3. Failure to Recharge Springs	a. Defective motor cut-off switch, interlock switch, or closing latch monitoring switch.	Replace switch.
	b. Damaged or dirty contacts in control circuit.	Recondition or replace contacts.
	c. Blown fuse in closing circuit.	Replace blown fuse after determining cause of failure.
	d. Faulty connection in charging circuit.	Repair broken or loose wires and see that all binding screws are tight.
4. Overheating	a. Poor condition of contacts due to lack of attention after severe duty or too frequent operation.	Recondition or replace burned and pitted contacts. (Contacts should be reconditioned very carefully and only when absolutely necessary.)
	b. Contacts not properly aligned or adjusted.	Check all adjustments in accordance with section on Adjustments.
	c. Breaker kept closed or open for too long a period.	Operate breaker more often to wipe contacts clean. Replace contacts if necessary.
	d. Overloading	Replace breaker with one of adequate rating for present or future load, or re-arrange circuits so as to remove excess load.
	e. Primary connections of inadequate capacity.	Increase size or number of conductors or remove excess current.
	f. Loose connections or terminal connectors.	Tighten.
	g. Ambient temperature too high.	Relocate in a cooler place or arrange some means of cooling.

move the caps and assembly bolts (6, 8, 10 and , figure 15).

move the side brace (5, figure 15) and pole pieces and 16, figure 15).

remove the upper mounting support (9, figure 15) move the assembly bolt (1, figure 15) and connection lt (2, figure 17).

move the assembly bolts (15, figure 15) to remove e lower brace (7, figure 15).

move the lower mounting support (13, figure 15) by moving the assembly bolts (14, figure 15) and the nnection nut (9, figure 17).

this point the side shields (11, figure 15) the upper c runner assembly (4, figure 17) and lower arc nner assembly (7, figure 17) can be removed.

rther disassembly of both the upper and lower arc nner assemblies can be done by removing the rious screws and 1/4 inch assembly bolts (not ustrated) as shown in figure 16).

ne arc chute sides (7, figure 16) can be separated removal of assembly bolts (2 and 4, figure 15).

eassemble the arc chute in the reverse order.

he following items should be noted during assembly:

qually space the fins of the arc chute sides before olting together (figure 19).

heck to insure that electrical connections to the owout coils are tight.

efore bolting the upper mounting support in place, ake certain that the upper arc runner assembly is ght against the arc chute sides so that the gap etween the throat piece assembly (8, figure 16) and e arc chute side (7, figure 16) is a minimum.

ake certain that the electrical connections (2 and 9, gure 17) are tight.

o reassemble the arc chute to the breaker, proceed s follows:

est the lower mounting support (10, figure 18) on e arc chute mounting bracket (8, figure 18) as own in figure 18.

ide the arc chute forward and lift it slightly to gage the supporting bolts, (2, figure 18) in the slots the upper mounting support (3, figure 18).

ighten the supporting bolts (2 and 9, figure 18). hese bolts serve as both the electrical and mech- ical connections between the bushing and arc nners.

Check that the movable arcing contact (5, figure 18) passes through the baffle (12, figure 18) and the probes on the upper arc runner, (5, figure 17) without touching.

CONTACTS

Open the breaker and remove the box barrier and arc chutes as previously described.

Arcing Contacts

To remove the Stationary Arcing Contacts (10, figure 20) proceed as follows:

Disconnect the contact braids from contact fingers by removing two bolts (8, figure 20).

Grasp the lower end of the contact fingers and pull the contact assembly downward to remove from stud assembly.

To disassemble braids from the stud assembly remove one bolt (5, figure 20).

Remove two bolts (6, figure 20) to disassemble stud assembly from contact support.

Reassemble in the reverse order.

Primary Contacts

To remove the Stationary Primary Contacts (4, figure 22) proceed as follows:

Using the spring compressor (1, figure 22), push the compressor on to the contact spring (2). Close the pliers to compress the spring and tip the bottom of the guide bolt out of the socket in the contact finger (4). The spring compressor may require adaptation so that it will grasp the spring properly. This can be done by closing the spacing between the "U" shaped plier tips. The tips can be closed by tapping with a hammer to bring the two tip sides closer together.

After removing the spring assembly, the fingers are removed by lifting the front end of the finger up and thus pivoting the finger out of the contact block (3).

The contact block should be cleaned and regreased with D50H47 grease before reassembling the fingers.

To replace the Stationary Primary Contacts, proceed as follows:

Apply a thin coating of D50H47 grease on the hinged edge of the finger (17), then place the finger on the contact block (3) so that it is retained by the stop.

Reassemble by replacing the fingers, placing the spring and guide assembly into the pliers and closing the pliers to compress the spring as shown in figure 22A. Insert the end of the spring guide into the retaining block (7) and tip the spring assembly into position with the head of the spring guide in the finger socket as shown in figure 22B.

To remove the Movable Arcing Contact (9, figure 9), proceed as follows:

Remove the assembly bolts (10).

Reassemble in the reverse order.

To remove the Movable Primary Contacts (6, figure 9), in the 1200 Amp. Breaker, proceed as follows:

Remove the nuts from the assembly bolts (11). Remove the primary contacts.

Reassemble in the reverse order.

To remove the Movable Primary Contacts (6, figure 9), in the 2000 Amp. Breaker, proceed as follows:

Remove the nuts from the assembly bolts (11). Remove the connection bar (12). Remove the cup bearing (13). Spread the contact arms (7) and remove the primary contacts (6).

Reassemble in reverse order.

To remove the Contact Blade Assembly (6, 7 and 9, figure 9), proceed as follows:

Remove the connection bar (12). Remove the cup bearing (13) and the pin (14).

When reassembling, first insert the piston assembly (15), into the booster cylinder and reassemble the cup bearing (13). Replace the pin (14), and the connection bar (12).

After disassembly and reassembly of any contacts, check all contact adjustments as described under Adjustments.

BUSHINGS

NOTE

Do not remove all six bushings at once.

The bushings have been carefully aligned with the breaker frame, during assembly at the factory, and it is important that this alignment be maintained to facilitate installation of the breaker in the metalclad unit. It is, therefore, recommended that the bushings be removed and reassembled one at a time. Also, before removing any one bushing, measure the distance from that particular bushing to adjacent bushings in both directions, so that it may be reinstalled in the same location.

It is also possible to remove and reassemble three bushings at one time. If this is preferred, alignment of the bushings may be accomplished by placing the breaker in a de-energized spare metalclad unit before tightening the bushing mounting bolts. This must be done before the arc chutes are reinstalled.

To replace the bushing, proceed as follows:

Rear Bushing

Open the breaker and remove the box barrier and arc chutes as already described. Remove the upper barriers and lower horizontal barriers (14 and 18, figure 7). Remove the four bolts at the mounting flange of the rear bushing being replaced and lower the bushing and arc runner assembly. For further disassembly refer to figure 20.

Disassemble the primary contact springs (16, figure 20) as previously described.

Disassemble the spring retainer (14) by removing the barrier support (15).

The contact support (4) and arc chute mounting bracket (2) are disassembled by removing two bolts (3).

Reassemble in the reverse order. The arc chute mounting bracket (2) is not symmetrical and must be assembled correctly to orient the chute properly on the breaker. The longest projection of the bracket should be toward the lower end of the bushing.

Front Bushing

Open the breaker and remove the box barrier and arc chutes as already described. Remove the upper and lower horizontal barriers (14 and 18, figure 7). Remove the connection bar (12, figure 9), cup bearing (13), and pin (14). Remove the four bolts at the mounting flange of the front bushing being replaced, and lower the bushing.

When reassembling, first mount the bushing and assemble the cup bearing (13) contact arm (7), and replace the pin (14). The contact surfaces at the hinge point of the contact blade and bushing should have a thin coating of D50H47 grease. Check all contact adjustments as outlined under Adjustments.

INTERLOCK SWITCH

To remove the interlock switch (3, figure 10), remove the two mounting screws and disconnect the lead wires.

Reassemble in the reverse order and check the switch adjustments as explained under Adjustments.

LATCH CHECKING SWITCH

To remove the latch checking switch (7, figure 6), (when furnished), remove the two mounting screws and disconnect the lead wires. Reassemble in the reverse order and check the switch adjustments as explained under Adjustments.

MOTOR, RELAY AND LIGHT SWITCHES

The three switches are mounted in tandem as shown in figure 6.

Remove the opening spring per instructions below. Remove the two mounting bolts (14) from the switch bracket (15). Remove the two mounting screws of the lower switch. Remove the two mounting screws

the center switch. Remove the two mounting rews of the upper switch. Disconnect the lead res of the switch to be replaced.

assemble in the reverse order and check the itch adjustment as explained under Adjustments.

RIP SHAFT AND LATCH
emove the latch checking switch arm (when sup- ied). Remove the cotter pins on both ends of the aft (12, figure 11). Remove the set screw in the tch (11). Remove the trip coil linkage bolt (6). ace a block between the latch, the frame (either de), and the drive shaft until the latch is free of the y. Remove the key and all the burrs that may be ised around the keyway on the shaft. Burrs will ar or shave the bearing surfaces if they are not moved.

eassemble the parts in the reverse order. Be sure e latch spring is properly installed and the latch aligned in the center of the latch roller. Check the tch adjustment as described under Adjustments.

RIP LATCH ROLLER BEARING
emove the two cotter pins at the ends of the shaft , figure 12). Partially remove the shaft out the ght side of the frame until the latch roller (6) is ee.

eassemble in the reverse order with the proper pacing of the washers. Be sure the latch roller otates freely.

LOSING LATCH
emove the cotter pins at both ends of the latch shaft 19, figure 6). Remove the spring and paddle (16, gure 6). Remove the set screws from the latch 3, figure 6). Move the shaft (19) to the left (away om the frame) by tapping lightly on the inside end f the shaft. Rotate the shaft and continue tapping ntil the shaft is free. The shaft will push the outside eedle bearing from the housing.

eassemble in the reverse order, putting the bearing nto the frame last. Use a small piece of tubing or ipe when inserting the bearing to assure proper lignment. Check the latch adjustments as described nder Adjustments.

IOTOR SUPPORT
o remove the motor support (8, figure 14), first emove the latch spring (16, figure 6). Remove the ex charging stud (3, figure 14) and link (9). Remove ix 3/8 inch bolts (1, figure 14) on the bottom and ne 3/8 inch bolt on the right side. Remove four nounting bolts from the motor (not shown). Remove ne retaining ring (7) from the eccentric (2, figure 14).

eassemble all parts of the motor support in the everse order and re-align it properly as described nder Driving Pawl Adjustments.

CAM
Remove two set screws from the ratchet wheel (3, figure 3) and remove the wheel from the main shaft (8). Remove the two set screws from the cam (12, figure 1). Remove the prop reset spring (10, figure 2). Remove the two set screws from the cam (16, figure 5) and move the cam to the right on the shaft as far as it will go. Slide the shaft to the left until the key is fully exposed. Remove the key and check the shaft for burrs. Remove the shaft out the left side of the frame.

Reassemble in the reverse order using the correct number of washers and spacers to properly locate the parts. Rotate the mechanism through a closing operation using the manual charging wrench. Check the location of the cam follower (6, figure 5) on the cam (16). If necessary, move the cam to correct the alignment. Complete the closing operation and check the location of the prop pin (13, figure 5) on the prop (14). It should be approximately centered.

TRIP COIL
To replace the potential trip coil (2, figure 11) proceed as follows:

With the breaker in the open position, remove the two mounting bolts (3). Remove the upper support (1) and spacers. Cut wires at the butt connectors and remove the coil.

When replacing the coil be sure to assemble the correct fiber spacers at the ends before bolting the support (1). Adjust the coil location to allow approximately 1/4 inch of armature travel before the latch starts to move. Butt connect the wires and check the operation of the solenoid electrically and mechanically.

SPRING RELEASE COIL
To remove the spring release coil (5, figure 6) proceed as follows.

Block the closing springs as described in Installation. Remove the left hand closing spring as described in Closing Springs below. Remove the two mounting bolts (17), coil support (18), and spacers. Cut the wires at the butt connectors and remove the coil.

Replace the coil and the correct number of fibre spacers before bolting the support. Butt connect the wires and check that the armature is not binding. Check the coil for electrical operation.

CLOSING SPRINGS
The closing springs (6, figure 3) can be removed as follows:

Charge the springs with the manual charging wrench and apply the spring blocking device as described in Installation. Discharge the springs by pushing the manual close button (7, figure 2). Rotate the cam shaft (8, figure 3) by using the manual charging

wrench until the gap between the spring (6) and the bearing block (10) is two inches or more. Lift both springs until they clear the lower supports, then pull forward and down until the top supports are free. Either discharge the opening springs by pushing the manual trip lever or block the opening springs with a suitable blocking device.

OPENING SPRINGS

To remove the opening springs (9, figure 3) proceed as follows:

Charge and block the closing springs as described under Installation. Push the manual trip level (11, figure 2) to be sure the opening springs are fully discharged. Remove the upper pin (13, figure 3) and the lower pin (11).

After reassembling the springs check the primary opening as described under Primary Contact Gap.

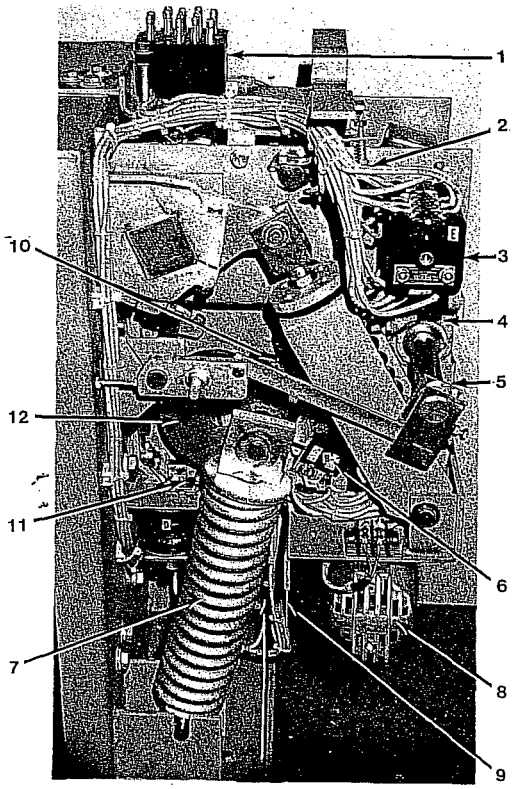

1. Secondary Coupler
2. Interlock Switches
3. Auxiliary Switch
4. Latch Checking Switch Location Only
5. Charge-Discharge Indicator
6. Power Switches
7. Closing Spring
8. Motor
9. Fuses (Location only - Fuses not shown)
10. Closing Latch Roller
11. Closing Latch
12. Switch Cam
13. Control Relay

J7907

Figure 1 Operating Mechanism - Left Side

1. Trip Coil
2. Open - Close Indicator
3. Auxiliary Switch
4. Counter (When Supplied)
5. Trip Latch
6. Charge-Discharge Indicator
7. Close Button
8. Motor
9. Fuse (when supplied)
10. Prop Spring
11. Trip Lever
12. Nameplate

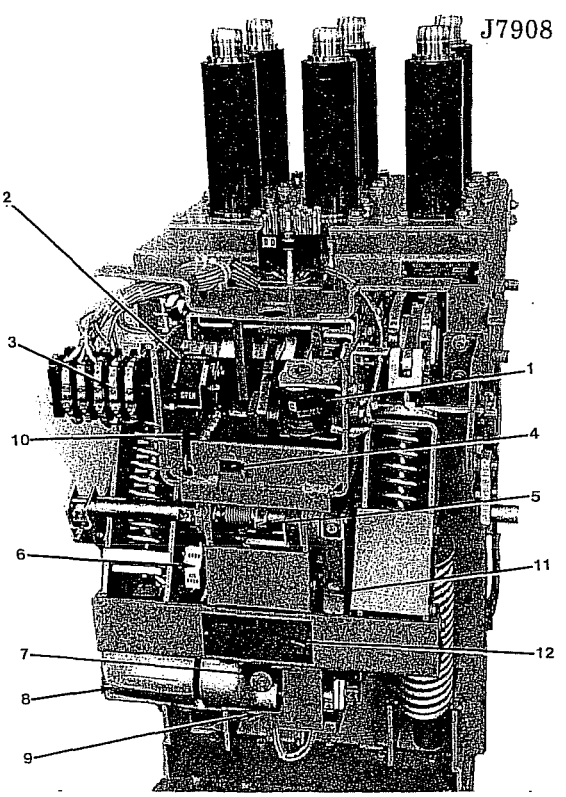

Figure 2 Operating Mechanism - Front

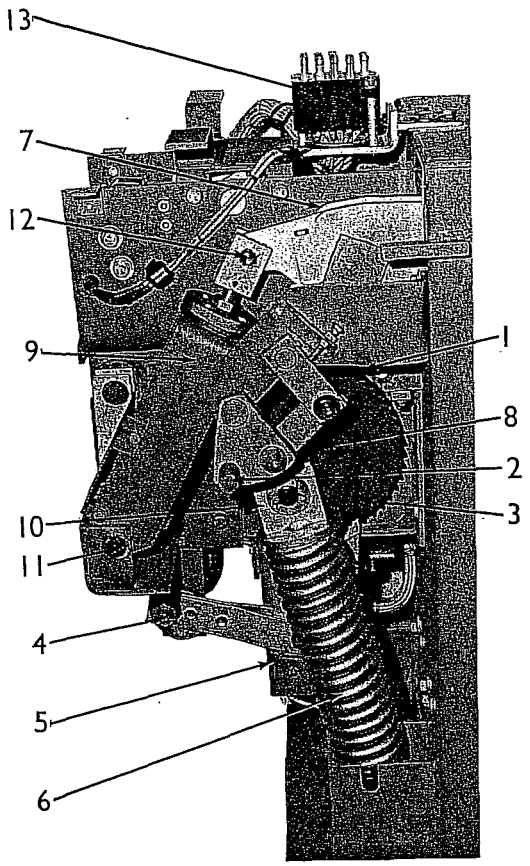

H4977

1. Latching Pawls
2. Positive Interlock Roller
3. Ratchet Wheel
4. Eccentric
5. Fuse (Location only - Fuse not shown)
6. Closing Spring
7. Main Shaft Bearing
8. Cam Shaft
9. Opening Spring
10. Guide Block
11. Lower Spring Pin
12. Upper Spring Pin
13. Secondary Coupler

Figure 3 Operating Mechanism - Right Side

1. Close Button
2. Motor
3. Fuse (when supplied)
4. Spring Blocking Device
5. Driving Pawl
6. Eccentric
7. Closing Spring
8. Manual Charging Wrench
9. Support Bolts

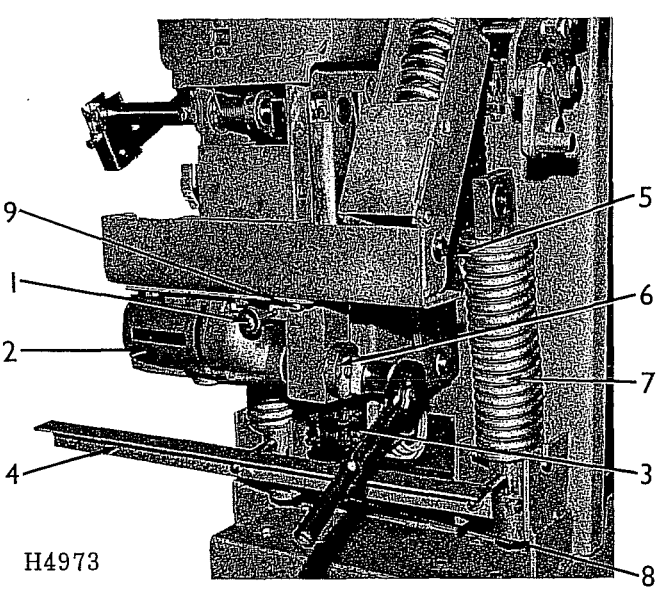

H4973

Figure 4 Spring Blocking Device

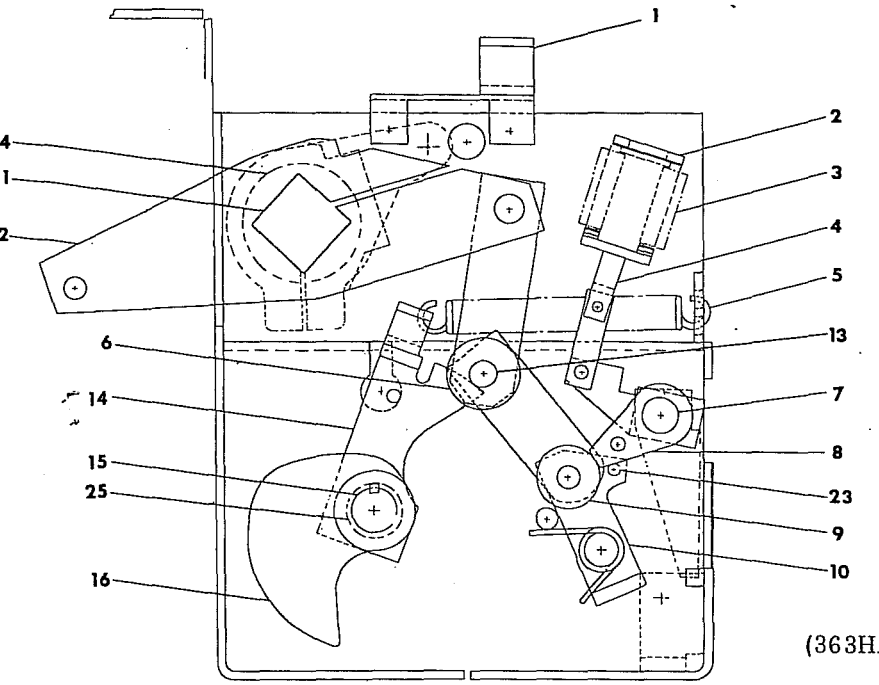

(363HA423-2)

Sectional Side View

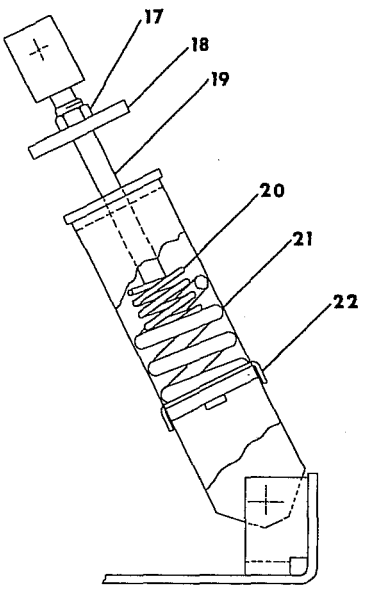

Opening Spring

1. Handle
2. Trip Coil Support
3. Trip Coil
4. Trip Armature
5. Prop Reset Spring
6. Cam Follower Roller
7. Trip Shaft
8. Trip Latch
9. Trip Latch Roller
10. Trip Latch Roller Support
11. Crank Shaft
12. Cranks
13. Prop Pin
14. Prop
15. Drive Shaft
16. Cam
17. Check Nut
18. Stop Plate
19. Spring Rod
20. Spring
21. Spring
22. Spring Guide
23. Stop Pin
24. Main Shaft Bearing
25. Cam Shaft Bearing

Figure 5 Operating Mechanism

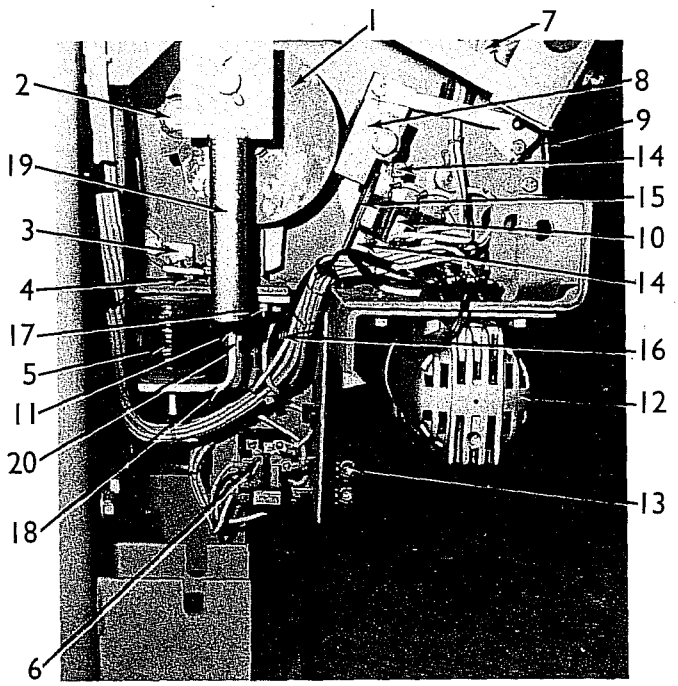

1. Switch Cam
2. Closing Latch Roller
3. Closing Latch
4. Latch Adjusting Screw
5. Spring Release Solenoid
6. Control Relay
7. Latch Checking Switch
8. Switch Striker
9. Charge-Discharge Indicator
10. Power Switches
11. Latch Monitoring Switch
12. Motor
13. Fuse
14. Switch Support Bolts
15. Switch Support
16. Closing Latch Spring
17. Release Coil Bolts
18. Release Coil Support
19. Closing Latch Shaft
20. Switch Mounting Bracket

H4971

Figure 6 Control Mechanism

1. Box Barrier Support
2. Box Barrier
3. Arc Chute
4. Arc Runner, Upper
5. Blow Out Coil, Upper
6. Blow Out Core, Upper
7. Movable Arcing Contact
8. Arc Runner, Lower
9. Blow Out Coil, Lower
10. Blow Out Core, Lower
11. Pole Piece
12. Front Bushing
13. Rear Bushing
14. Upper Horizontal Barrier
15. Main Operating Crank
16. Arc Chute Support
17. Spring Retainer
18. Lower Horizontal Barrier
19. Operating Rod
20. Stationary Arcing Contact
21. Stationary Primary Contact
22. Movable Primary Contact
23. Movable Contact Arm Assembly
24. Cup Bearing
25. Booster Tube and Piston
26. Front Vertical Barrier
27. Check Nut
28. Connection Bar
29. Booster Cylinder

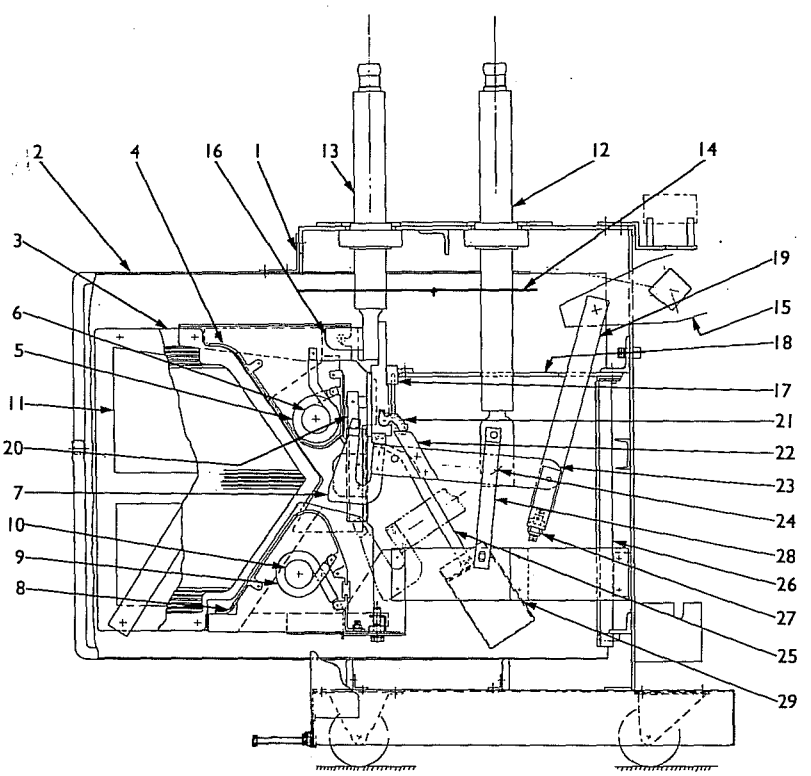

(363HA423-12)

Figure 7 Breaker Pole Unit - Cross Section

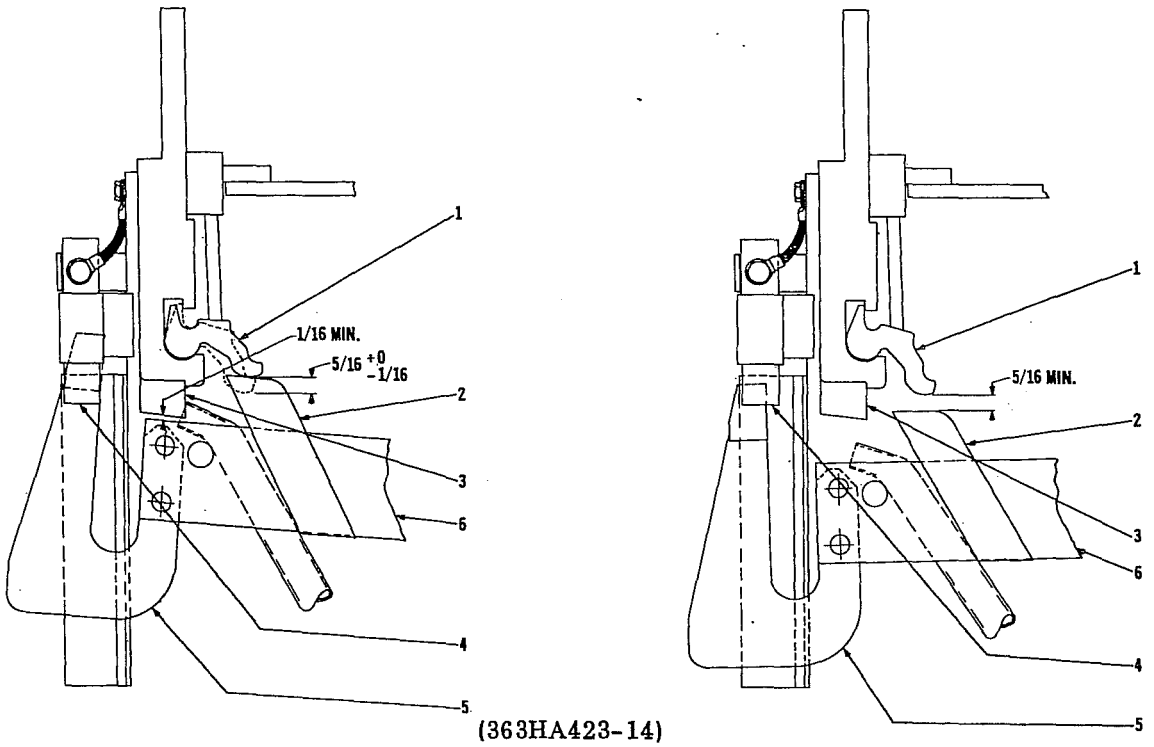

Primary Contact Wipe

Arcing Contact Wipe

1. Stationary Primary Contacts
2. Movable Primary Contacts
3. Buffer Block
4. Stationary Arcing Contacts
5. Movable Arcing Contacts
6. Contact Arm

Figure 8 Contact Adjustments

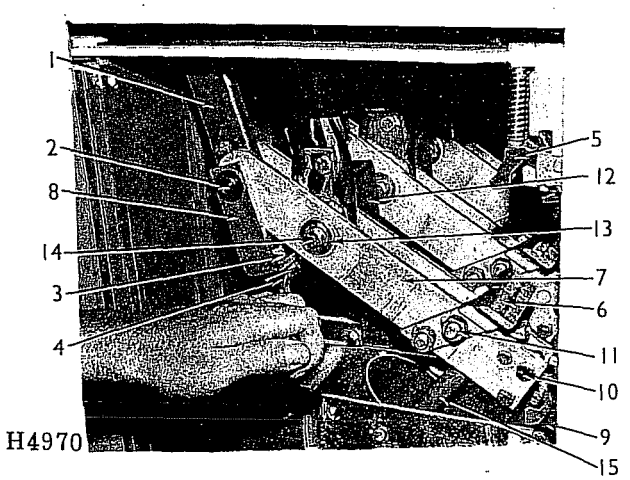

1. Operating Rod
2. Operating Rod Pin
3. Adjusting Nut
4. Check Nut
5. Stationary Primary Contacts
6. Movable Primary Contacts
7. Contact Arm
8. Yoke
9. Movable Arcing Contact
10. Assembly Bolts
11. Assembly Bolts
12. Connection Bar
13. Bearing
14. Hinge Pin
15. Piston Assembly

Figure 9 Adjustable Coupling for Making Primary Contact Wipe Adjustments

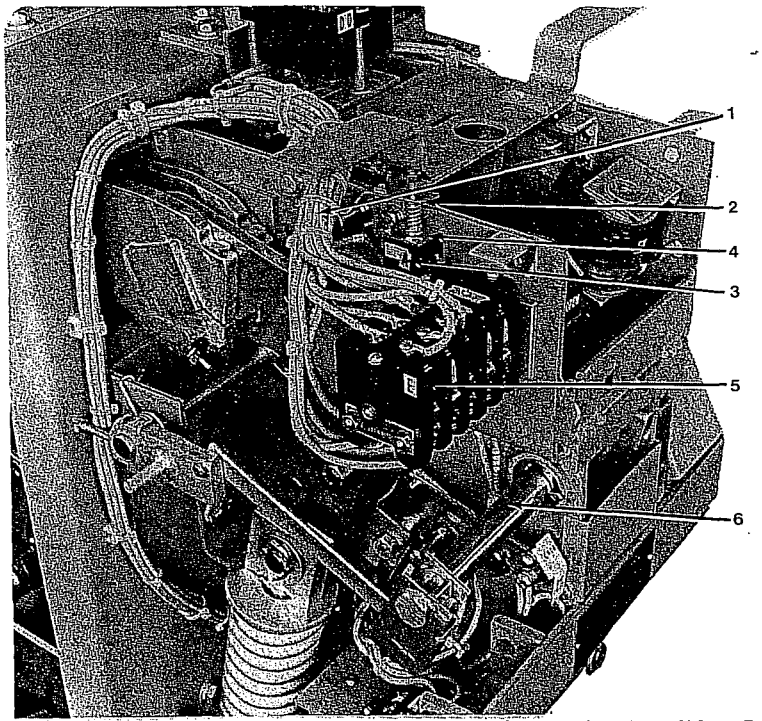

1. Positive Interlock Shaft
2. Switch Arm
3. Interlock Switch
4. Switch Support
5. Auxiliary Switch
6. Trip Shaft

J7906

Figure 10 Positive Interlock Switch

1. Trip Coil Support
2. Trip Coil
3. Mounting Bolts
4. Counter (When Supplied)
5. Trip Latch
6. Trip Arm Screw
7. Manual Trip Lever
8. Open-Close Indicator
9. Auxiliary Switch
10. Handle
11. Latch Set Screw
12. Cotter Pin
13. Prop Spring

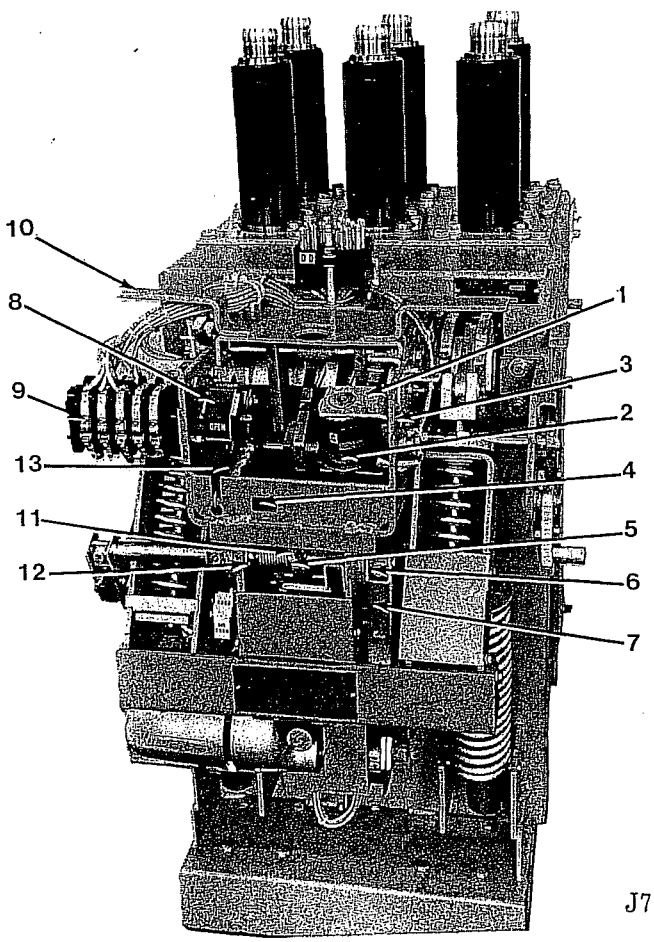

J7908

Figure 11 Auxiliary Switch and Trip Coil

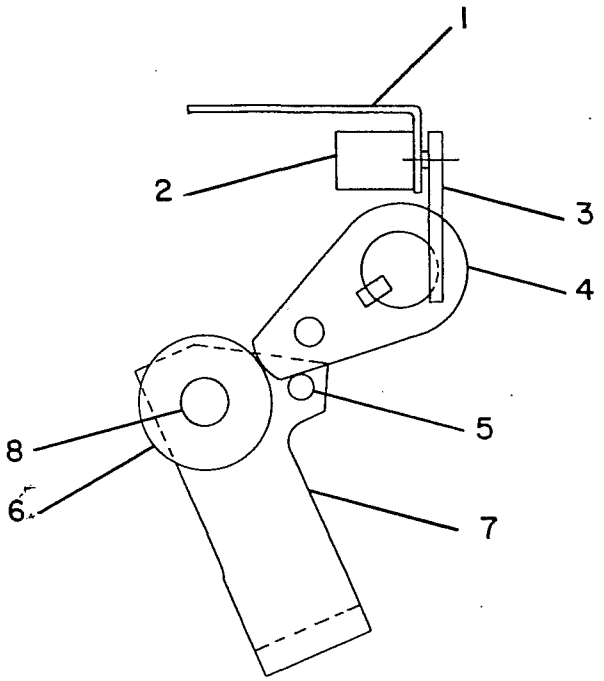

1. Switch Support
2. Latch Checking Switch
3. Switch Arm
4. Trip Latch
5. Reset Pin Stop
6. Latch Roller
7. Latch Roller Link
8. Latch Roller Pin

Figure 12 Latch Checking Switch

1. Plunger Bolt
2. Check Nut
3. Breaker Lifting Pins
4. Plunger Shield

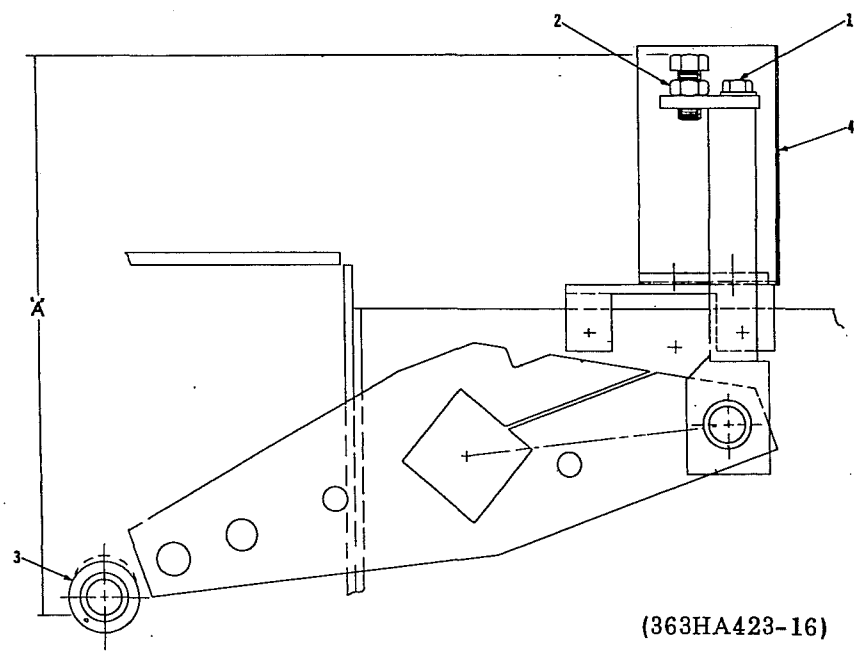

Figure 13 Plunger Interlock

H4973

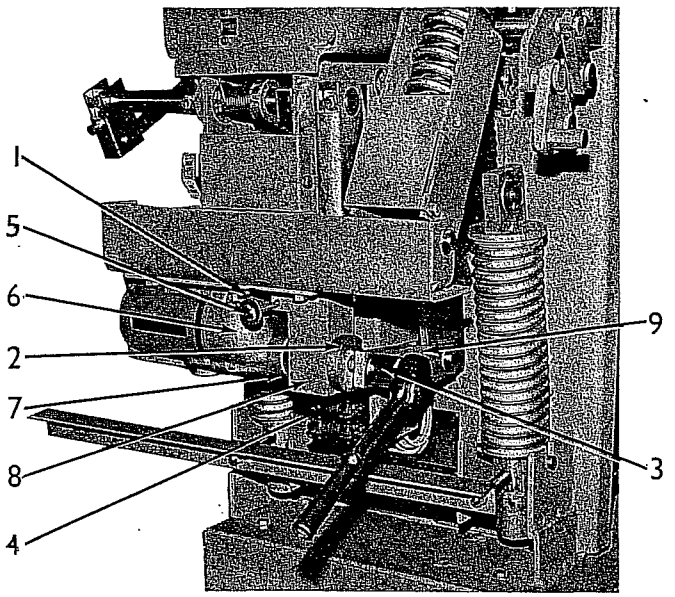

1. Mounting Bolts
2. Eccentric
3. Hex Charging Stud
4. Fuse Block (when supplied)
5. Manual Close Button
6. Motor
7. Retaining Ring
8. Motor Support
9. Driving Link

Figure 14 Driving Elements

1. Assembly Bolt and Bushing
2. Assembly Bolt
3. Upper Pole Piece
4. Assembly Bolt
5. Side Brace
6. Assembly Bolt
7. Lower Brace
8. Assembly Bolt
9. Upper Mounting Support
10. Insulating Cap
11. Side Shield
12. Assembly Bolt
13. Lower Mounting Support
14. Assembly Bolts
15. Assembly Bolts
16. Lower Pole Piece
17. Upper Insulation

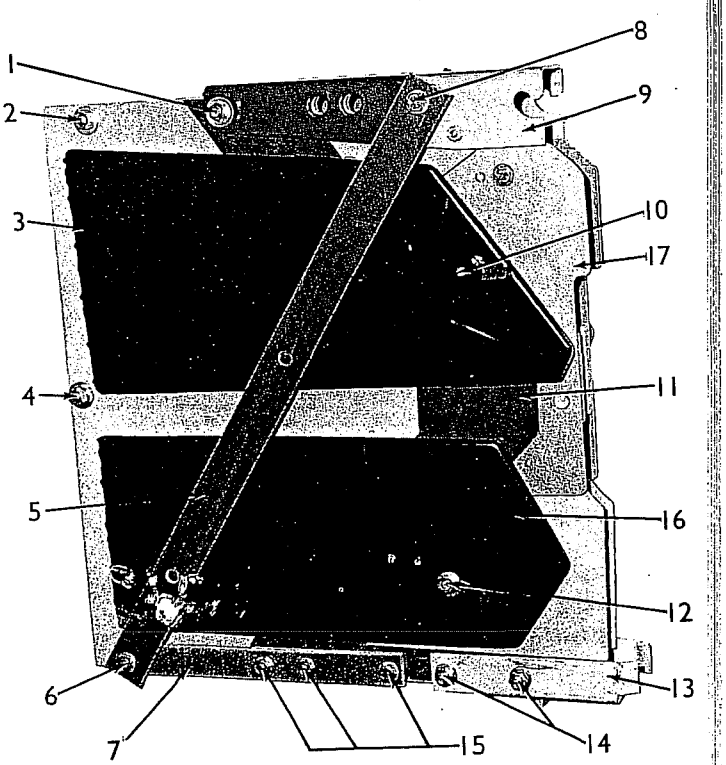

H6074

Figure 15 Arc Chute Assembly

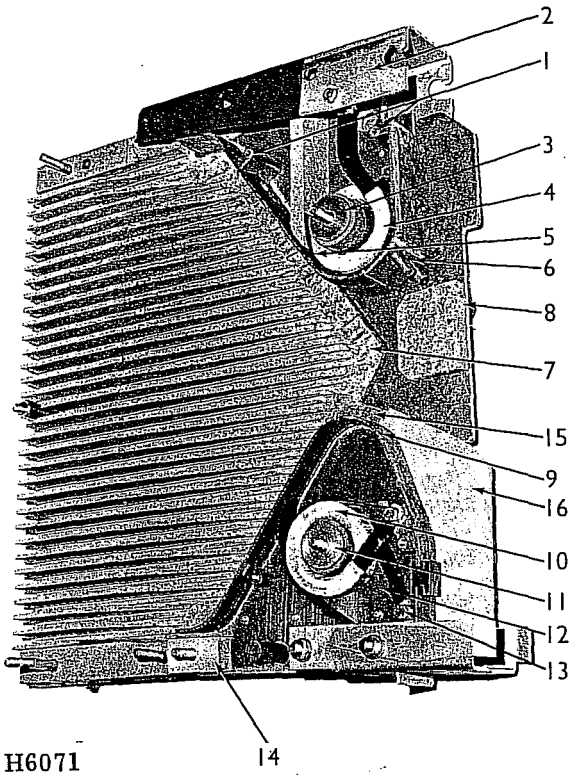

1. Upper Arc Runner Spacers
2. Upper Arc Runner Assembly
3. Blowout Core
4. Blowout Coil
5. Insulation
6. Upper Arc Runner
7. Arc Chute Side
8. Throat Piece Assembly
9. Lower Arc Runner
10. Blowout Coil
11. Blowout Core
12. Lower Arc Runner Assembly
13. Lower Coil Connection
14. Lower Arc Runner Spacers
15. Lower Shield
16. Lower Insulation

Figure 16 Arc Chute Assembly With Side Removed

1. Upper Mounting Support
2. Connection Bolt
3. Upper Blowout Coil
4. Upper Arc Runner Assembly
5. Upper Arc Runner
6. Throat Piece Assembly
7. Lower Arc Runner Assembly
8. Lower Coil Connection
9. Connection Nut
10. Lower Mounting Support

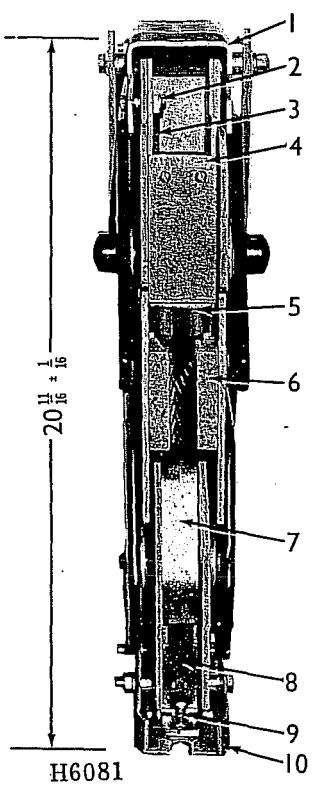

Figure 17 Front View Arc Chute Assembly

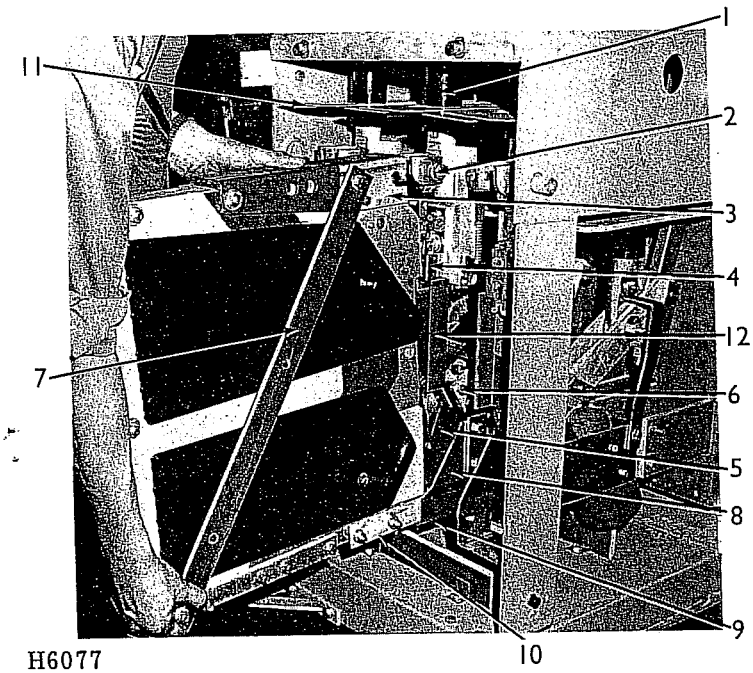

1. Rear Bushing
2. Supporting Bolt
3. Upper Mounting Support
4. Stationary Arcing Contact Assembly
5. Movable Arcing Contact
6. Assembly Bolts
7. Brace for Arc Chute
8. Arc Chute Mounting Bracket
9. Lower Supporting Bolt
10. Lower Mounting Support
11. Upper Horizontal Barriers
12. Baffle

Figure 18 Arc Chute Partially Removed

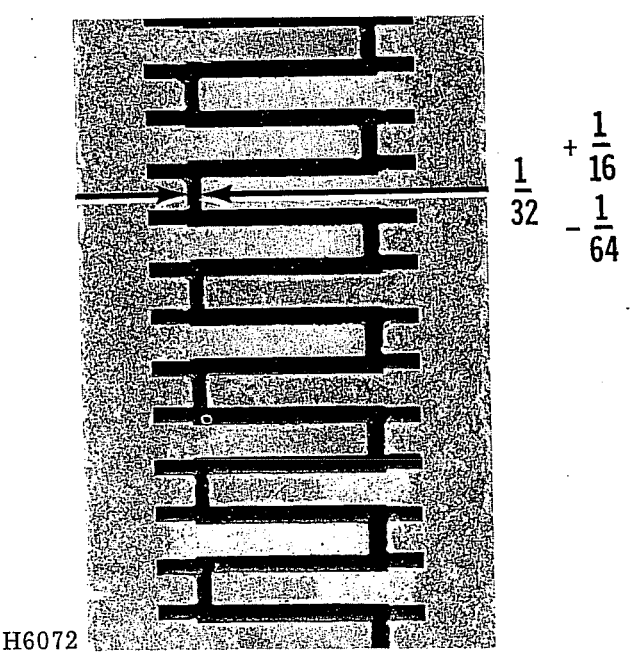

Figure 19 Arc Chute Fin Spacing

J7911

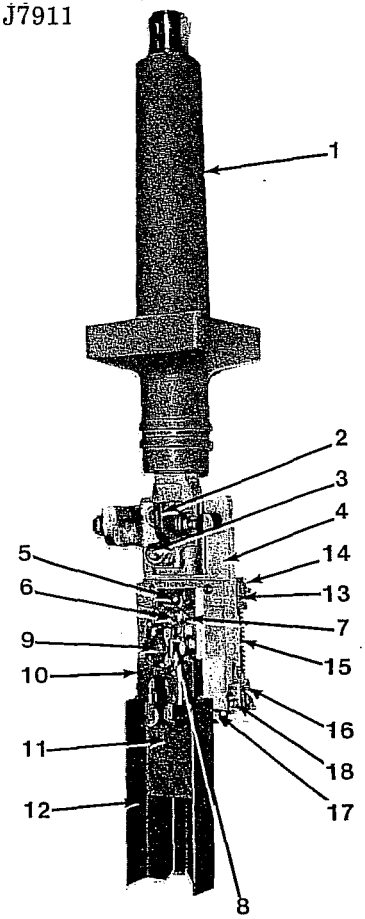

1. Rear Bushing
2. Guide and Support for Arc Chute
3. Bolts for Contact Support
4. Contact Support
5. Bolt for Flexible Braid
6. Mounting Bolt
7. Flexible Braid
8. Connection Bolt
9. Stud for Mounting Arcing Fingers
10. Stationary Arcing Contact Assembly
11. Insulating Plate
12. Baffle
13. Spring Retainer
14. Barrier Support
15. Contact Springs
16. Stationary Primary Contact
17. Buffer
18. Contact Retainer

Figure 20 Rear Bushing Assembly

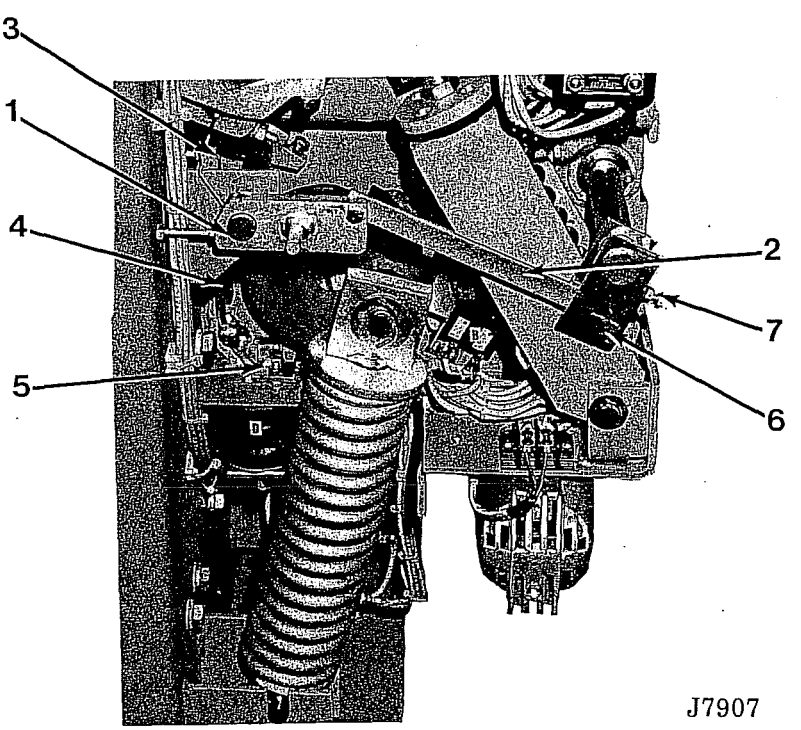

J7907

1. Crank
2. Link
3. Clevis (upper)
4. Clevis (lower)
5. Crank
6. Crank (front)
7. Adjusting Bolts

Figure 21 Spring Release Interlock

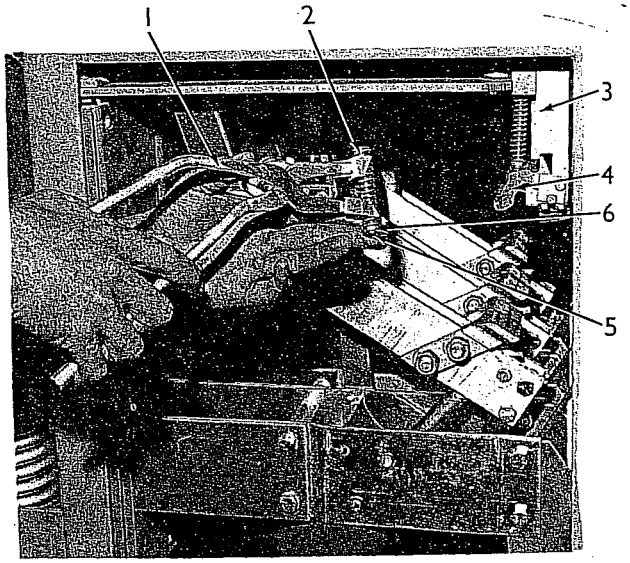

H4976

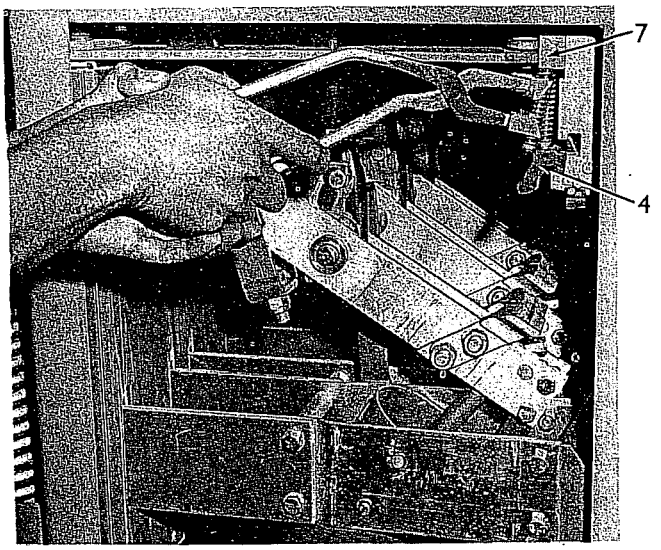

H4969

1. Spring Compressor
2. Contact Spring
3. Contact Block
4. Stationary Main Contact
5. Spring Guide
6. Spring Spacer
7. Spring Retainer

Figure 22 Method of Replacing Primary Contact Springs

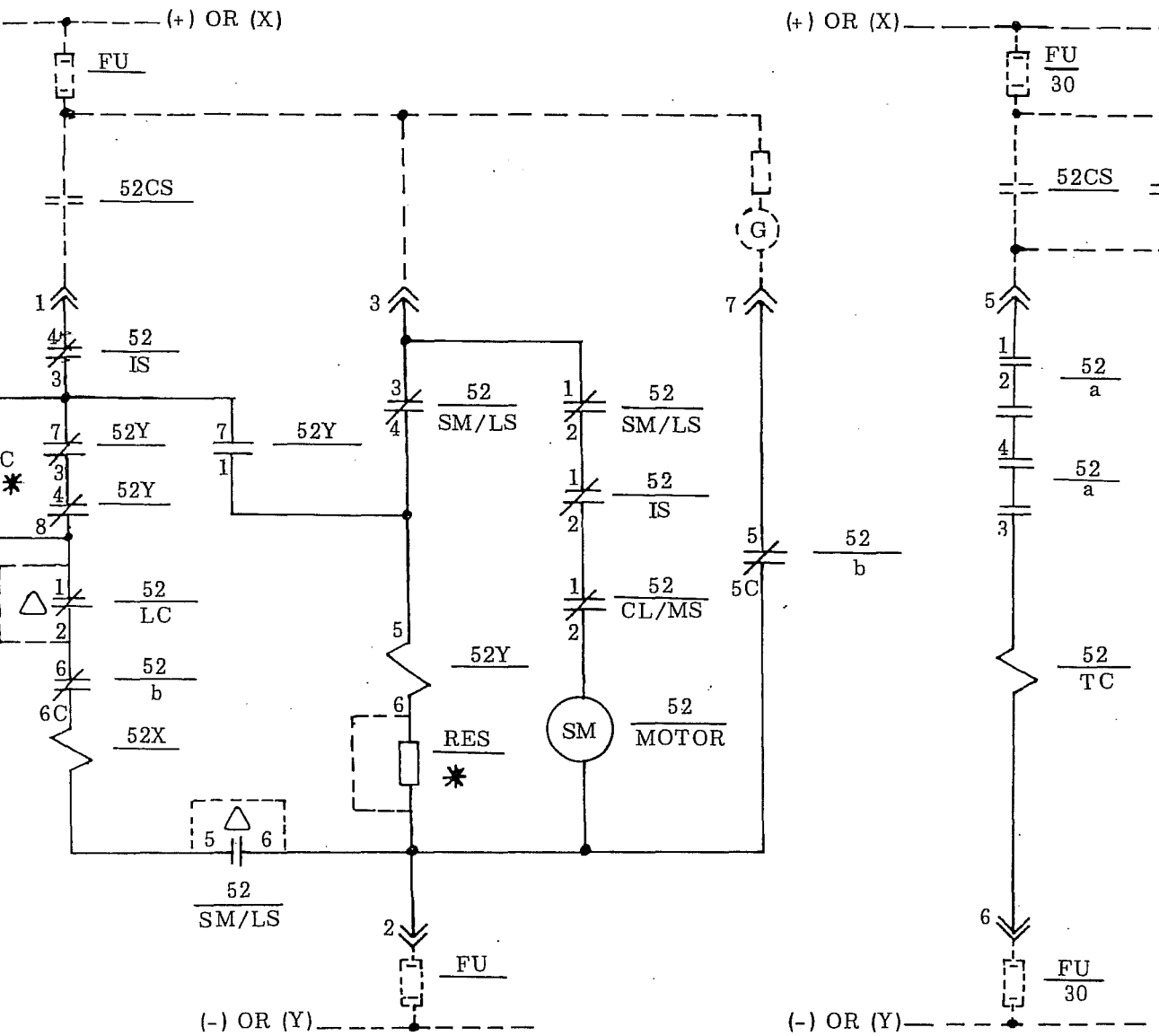

* Required For 250 Volt DC Operation Only

Δ Contacts Furnished Only As Required

Typical Elementary Wiring For Magne-Blast

	FIGURE & REF.	DESCRIPTION
52/IS	10 - 3	Interlock switch mechanically closed when breaker fully raised or fully lowered in metalclad unit.
52/SM/LS	6 - 10	Spring motor limit switch mechanically operated. Contacts (1-2) and (3-4) open and contacts (5-6) close when closing springs are fully charged.
52X	6 - 5	Spring release coil operates latch to release or close breaker.
52/CL/MS	6 - 11	Close latch monitoring switch is closed when latch is in position to hold fully charged closing springs.
52/Y	6 - 6	Auxiliary control relay (Anti-pumping).
52/a	10 - 5	Auxiliary switch contact open when breaker is open.
52/b	10 - 5	Auxiliary switch contact closed when breaker is open.
52/TC	11 - 2	Trip coil.
52/Motor		Spring charging motor.
52/LC		Latch checking switch closed when trip latch is in position for a close operation.

RENEWAL PARTS

is recommended that sufficient renewal parts be
arried in stock to enable the prompt replacement
any worn, broken, or damaged parts. A stock of
ich parts minimize service interruptions caused by
reakdowns, and saves time and expense. When
ontinuous operation is a primary consideration,
ore renewal parts should be carried, the amount
epending upon the severity of the service and the
me required to secure replacements.

enewal parts which are furnished may not be
lentical to the original parts, since improvements
re made from time to time. The parts which are
rnished, however, will be interchangeable.

he Renewal Parts List covers the following types
breakers having ampere ratings of 1200 or 2000
mps.

NOTE
The listed terms "Right" and "Left" apply when facing the mechanism end of the breaker.

ORDERING INSTRUCTIONS
Always specify the breaker serial number and the complete type description, e.g. AM 4.16-250-8HB.

Specify the quantity, catalog number (if listed), reference number (if listed), and description of each part ordered, and this bulletin number.

Standard hardware, such as screws, bolts, nuts, washers, etc., is not listed in this bulletin. Such items should be purchased locally.

For prices, refer to the nearest office of the Canadian General Electric Company Limited.

AM 4.16 - 150 - 8C
AM 4.16 - 150 - 8CR
AM 4.16 - 150 - 8H
AM 4.16 - 150 - 8HR
AM 4.16 - 250 - 8C
AM 4.16 - 250 - 8CB
AM 4.16 - 250 - 8CR
AM 4.16 - 250 - 8H
AM 4.16 - 250 - 8HB
AM 4.16 - 250 - 8HR

RENEWAL PARTS

FOR

4.16-150 - 1200A and 2000A
4.16-250 - 1200A and 2000A

PARTS RECOMMENDED FOR MAINTENANCE

In the tabulations that follow are listed the parts which are recommended for normal maintenance.

The first group of parts are those recommended for non-repetitive applications where breakers are receiving less than 2000 operations per year.

For repetitive duty applications, where breakers are receiving more than 2000 operations per year, both the first and second groups of parts are recommended. Customers, through their own experience, should develop a stock of parts suited to their particular application.

MAINTENANCE PARTS FOR NON-REPETITIVE APPLICATIONS

g. & Ref. umbers	Amps	Type	Catalogue Number	No. Per Bkr.	Description
- 72	All	All	0197A1564 G-001	3	Throat Barrier Assembly
- 114	All	All	0136B8912 G-001	3	Right Hand Throat Piece Assembly
- 115	All	All	0136B8912 G-002	3	Left Hand Throat Piece Assembly
- 124	All	All	0168B2465 P-001	3	Arc Shield
- 128	All	All	0197A1532 P-001	6	Lower Mycalex
- 9	All	All	0197A1132 P-001	1	Prop Spring
- 25	All	All	25782-7	1*	Trip Coil 24V DC
	All	All	25782-5	1*	Trip Coil 48V DC
	All	All	25782-4	1*	Trip Coil 110V DC -125V DC
	All	All	25782-3	1*	Trip Coil 250V DC
	All	All	25782-5	1*	Trip Coil 230V AC
- 101	All	All	0132B3131 G-002	5	Switch Normally Open
- 105	All	All	0132B3131 G-001	1	Switch Normally Closed
- 107	All	All	0105C9393 P-001	1*	Motor 48V DC
	All	All	0105C9393 P-002	1*	Motor 110V DC and 125V DC, 115V AC
	All	All	0105C9393 P-003	1*	Motor 220V DC and 250V DC, 230V AC
- 109	All	All	0169B4663 G-001	1*	Relay and Support 48V DC
	All	All	0169B4663 G-002	1*	Relay and Support 110-125V DC
	All	All	0169B4663 G-003	1*	Relay and Support 220-250V DC
	All	All	0169B4663 G-004	1*	Relay and Support 230V AC
	All	All	0169B4663 G-005	1*	Relay and Support 115V AC
- 130	All	All	25782-5	1*	Spring Release Coil 48V DC
	All	All	25782-4	1*	Spring Release Coil 110-125V DC
	All	All	25782-3	1*	Spring Release Coil 250V DC
	All	All	25782-5	1*	Spring Release Coil 230V AC

Check breaker nameplate for proper voltage rating.

ADDITIONAL MAINTENANCE PARTS FOR REPETITIVE APPLICATIONS

Fig. & Ref. Numbers	Amps	Type	Catalogue Number	No. Per Bkr.	Description
23 - 30	All	All	0197A1576 G-001	3	Booster Cylinder
25 - 64	1200 & 2000	H & C	0338V0270 P-001	18	Primary Contact Finger Spring
	1200 & 2000	HB & CB	0338V0270 P-001	24	Primary Contact Finger Spring
	2500	H & C	0188A9257 P-001	24	Primary Contact Finger Spring
25 - 67	1200 & 2000	H & C	0197A1557 P-001	18	Primary Contact Finger
	1200 & 2000	HB & CB	0197A1557 P-001	24	Primary Contact Finger
	2500	H & C	0534A0851 P-001	24	Primary Contact Finger
25 - 81	All	All	0238A1220 G-001	3	Stationary Arcing Contact Assembly
26 - 108	All	All	0216A6098 P-001	6	Insulation Cap
26 - 131	All	All	0197A1545 P-001	6	Lower Barrier
27 - 171	All	All	0169B4560 G-002	3	Movable Arcing Contact
27 - 173	1200 & 2000	H & C	0197A1560 P-001	6	Movable Primary Contact
27 - 174	1200 & 2000	HB & CB	0534A0850 P-001	6	Movable Primary Contact
	1200 & 2000	HB & CB	0534A0850 P-002	6	Movable Primary Contact
	2500	H & C	0534A0850 P-001	6	Movable Primary Contact
	2500	H & C	0534A0850 P-002	6	Movable Primary Contact
27 - 178	All	All	0168B2466 G-003	3	Puffer Tube and Piston Assembly
27 - 185	All	All	0136B8986 G-002	3	Operating Rod
31 - 102	All	All	0237A3420 G-001	1	Auxiliary Switch (Type SB1)
31 - 102	All	All	0192A3614 G-004	1	Auxiliary Switch (Type SBM)
31 - 116	All	All	0136B8505 P-001	1	Outside Latching Pawl
31 - 117	All	All	0136B8505 P-002	1	Inside Latching Pawl
32 - 118	All	All	0136B8504 P-001	1	Driving Pawl
31 - 120	All	All	0216A6203 P-001	1	Ratchet Wheel
31 - 147	All	All	25782-5	**	Trip Coil 48V DC
	All	All	25782-4	**	Trip Coil 110-125V DC
	All	All	25782-3	**	Trip Coil 250V DC
	All	All	25782-5	**	Trip Coil 230V AC

** (1) required for spring release possibly (1) for tripping too, may be same voltage - Check nameplate for requirements.

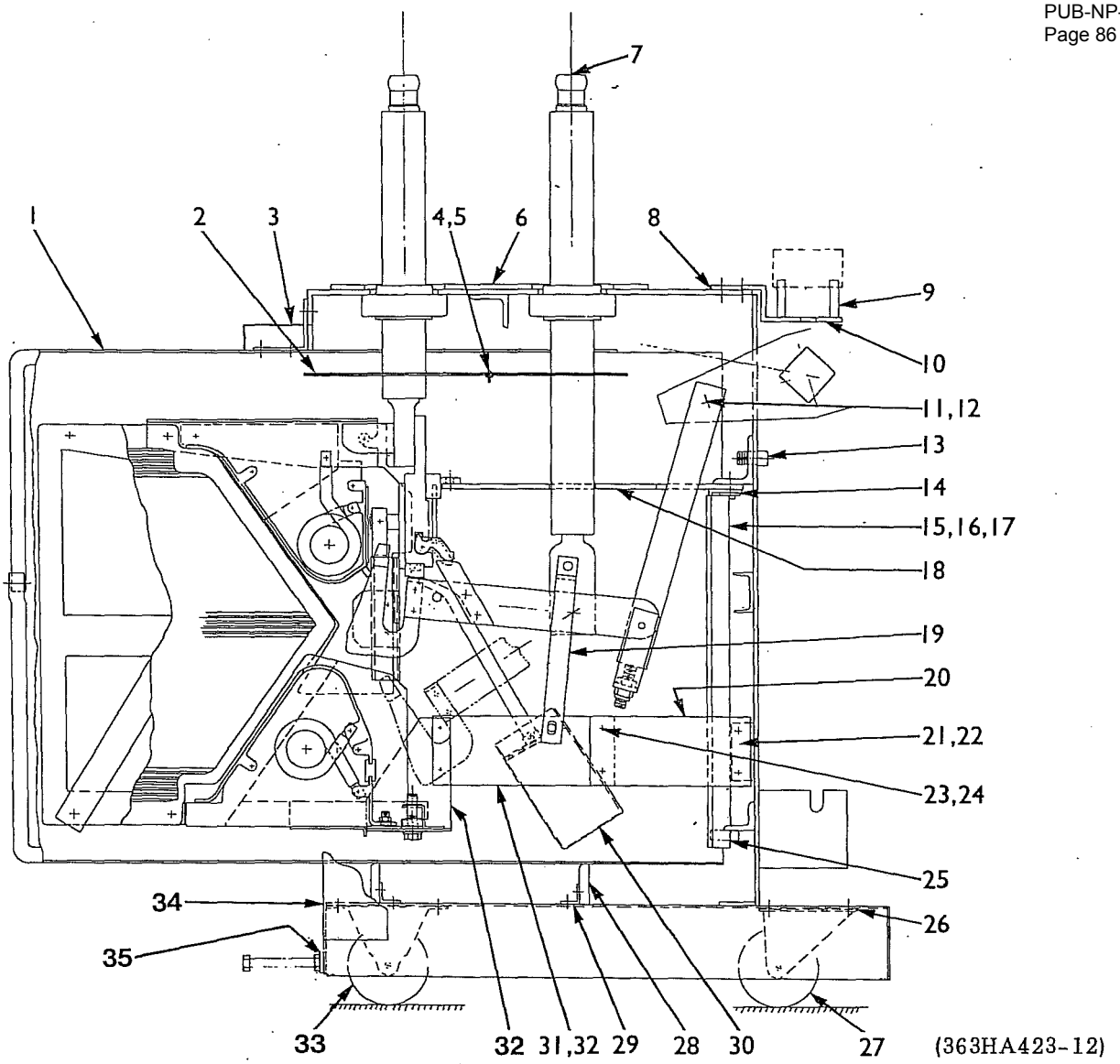

Breaker Side Section

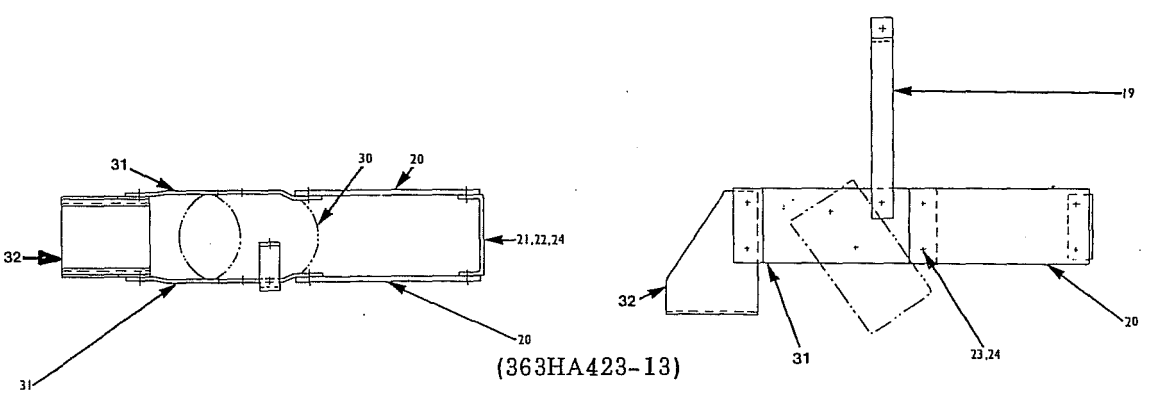

Booster Cylinder Support

Figure 23 Cross Section

Fig. & Ref. Numbers	Amps	Type	Catalogue Number	No. Per Bkr.	Description
23 - 1	All		0137C3120 G-001	1	Box Barrier Assembly
23 - 2	1200		0197A1585 P-001	6	Upper Horizontal Barrier
	2000 & 2500		0197A1585 P-002	6	Upper Horizontal Barrier
23 - 3	All		0115V0938 P-001	1	Ground Connection
23 - 4	All		0188A9769 P-001	3	Nylon Nut (1/4 - 20)
23 - 5	All		0188A9769 P-002	3	Nylon Screw (RD. HD. 1/4-20 x 1/2)
23 - 6	2000 & 2500		0216A6030 P-001	1	Top Plate
23 - 7	1200		0216A6196 P-001	6	Bushing Plug
23 - 8	All		0216A6376 P-001	2	Sec. Disc. Shim
23 - 9	All		A184858 P-316	3	Pipe Spacer (1/8" pipe, 1.88 lg.)
23 - 10	All		0136B8976 G-001	1	Sec. Disc. Support
23 - 11	All		K8585051 P-031	3	Pin
23 - 12	All		K8584554 P-034	6	Washer
23 - 13	All		0191A7397 P-001	2	Aligning Pin
23 - 14	All		0188A9773 G-001	3	Nut Plate
23 - 15	All		0136B8945 G-001	1	Vertical Barrier Ph. 3, R.H.
23 - 16	All		0136B8945 G-002	1	Vertical Barrier Ph. 2, Ctr.
23 - 17	All		0136B8945 G-003	1	Vertical Barrier Ph.1, L.H.
23 - 18	1200	H & C	0136B8963 P-001	3	Lower Horizontal Barrier
	1200	HB & CB	0136B8963 P-003	3	Lower Horizontal Barrier
		H & C	0136B8963 P-002	3	Lower Horizontal Barrier
	2000 & 2500	HB & CB	0136B8963 P-004	3	Lower Horizontal Barrier
23 - 19	All		0197A1591 P-001	3	Connecting Bar
23 - 20	All		0197A1572 P-001	6	Support
23 - 21	All		0197A1577 G-001	3	Support
23 - 22	All		0188A9761 P-011	6	Plug Nut (1/2-13 x 0.123)
23 - 23	All		0188A9753 P-004	3	Spacer
23 - 24	All		0188A9739 P-001	3	Locknut (3/8-16 ESNA)
23 - 25	All		0197A1582 P-001	3	Block
23 - 26	All		0335V0449 P-002	4	Front Wheel Shim
23 - 27	All		0188A9105 P-004	2	Front Wheel
23 - 28	All		0216A6016 P-001	2	Box Barrier Support
23 - 29	All		0188A9777 G-001	4	Box Barrier Support Angle
23 - 30	All		0197A1576 G-001	3	Booster Cylinder
23 - 31	All		0197A1571 P-001	3	Support
				3	
23 - 32	All		0137C3152 G-001	3	Interrupter Clamp
23 - 33	All		0188A9105 P-005	2	Rear Wheel
23 - 34	All		0335V0448 P-002	4	Rear Wheel Shim
23 - 35	All		0137C3737 P-004	1	Stop Buffer Bar

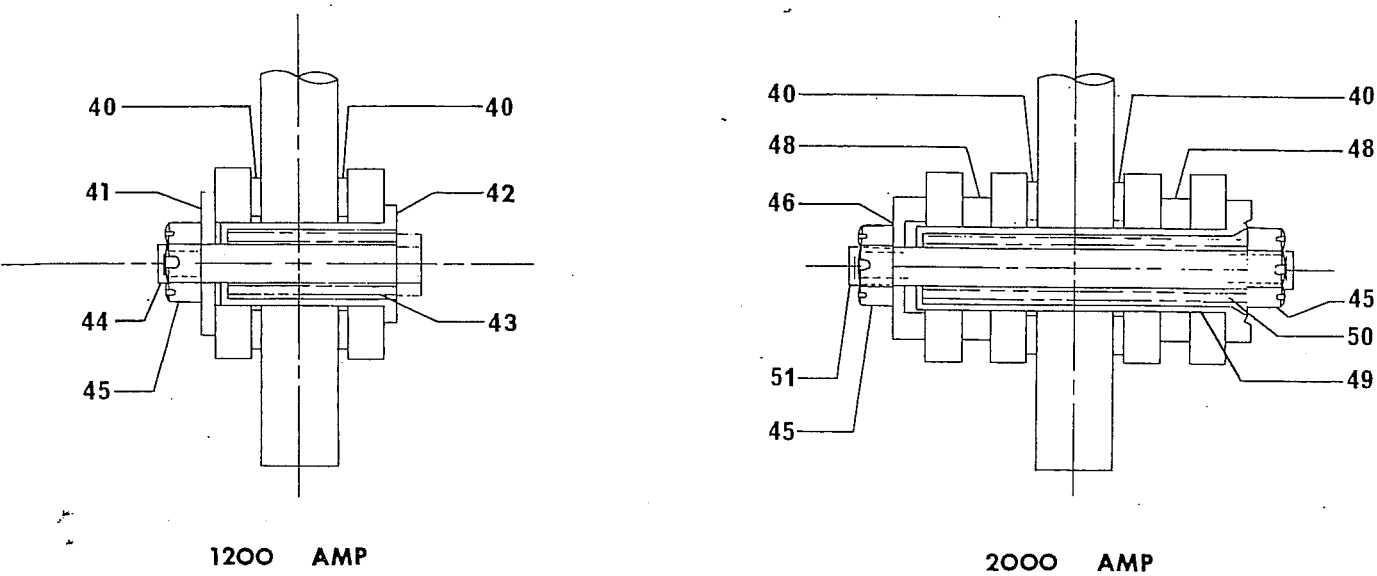

Figure 24 Hinge Cross Section

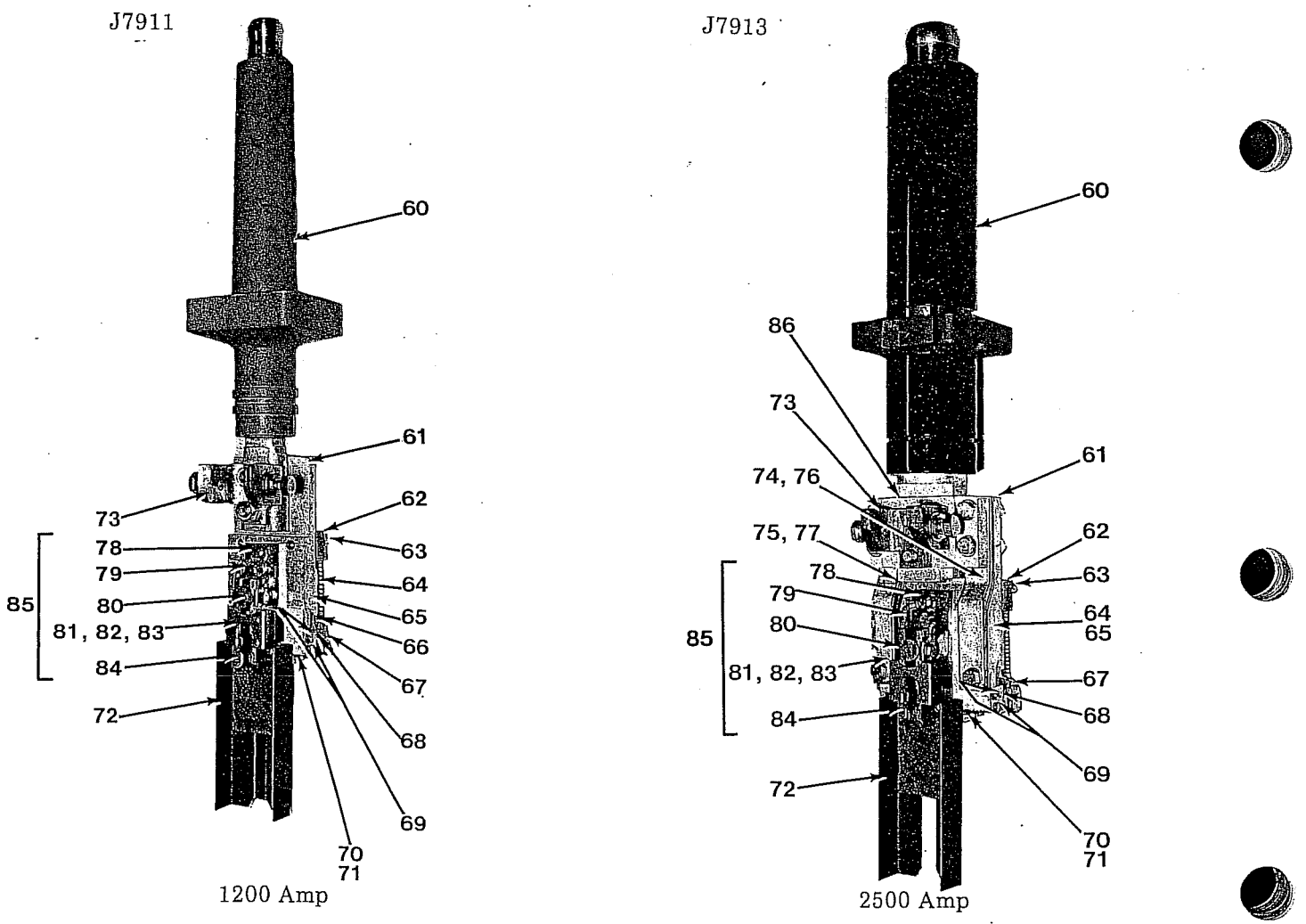

Figure 25 Rear Bushing Assembly

Fig. & Ref. Numbers	Amps	Type	Catalogue Number	No. Per Bkr.	Description
24 - 40	All	All	0338V0272 P-001	6	Hinge Washer
24 - 41	1200		K8517002 P-041	3	Washer
24 - 42	1200		0335V0121 P-001	3	Bearing
24 - 43	1200		0108V0217 P-001	3	Spring
24 - 44	1200		0169A1504 P-001	3	Bolt
24 - 45	1200		0216A6370 P-001	3	Slotted Nut
	2000 & 2500		0216A6370 P-001	6	Slotted Nut
24 - 46	2000 & 2500		0108V0120 P-001	3	Washer
24 - 48	2000		0108V0117 P-001	6	Spacer
24 - 48	2500		0238A1280 P-001	6	Spacer 2.00 Dia.
24 - 49	2000 & 2500		0238A1471 P-001	3	Bearing-
24 - 50	2000 & 2500		0108V0219 P-001	3	Spring
24 - 51	2000 & 2500		0108V0162 P-001	3	Stud
25	1200	H & C	0473L0125 G-002	3	Rear Bushing Assembly Complete
	1200	HB & CB	0473L0125 G-007	3	Rear Bushing Assembly Complete
	2000	H & C	0473L0125 G-003	3	Rear Bushing Assembly Complete
	2000	HB & CB	0473L0125 G-008	3	Rear Bushing Assembly Complete
	2500	H & C	0473L0125 G-009	3	Rear Bushing Assembly Complete
25 - 60	1200	All	0169B4587 G-001	3	Rear Bushing
	2000 & 2500	All	0136B8960 G-001	3	Rear Bushing
25 - 61	1200 & 2000	H & C	0136B8938 P-001	3	Contact Support 6 Wide
	1200 & 2000	HB & CB	0168B2928 P-001	3	Contact Support 8 Wide
	2500	H & C	0169B4555 P-001	3	Contact Support 8 Wide with Jumpers
25 - 62	1200 & 2000	H & C	0136B8939 G-001	3	Spring Retainer 6 Wide
	All	HB & CB	0101A1230 G-001	3	Spring Retainer 8 Wide
	2500	H & C	0101A1230 G-001	3	Spring Retainer 8 Wide
25 - 63	All	All	0149A8908 P-001	6	Eye Bolt
25 - 64	1200 & 2000	H & C	0338V0270 P-001	18	Contact Spring
	All	HB & CB	0338V0270 P-001	24	Contact Spring
	2500	H & C	0188A9257 P-001	24	Contact Spring
25 - 65	1200 & 2000	H & C	0108V0172 P-001	18	Spring Guide
	All	HB & CB	0108V0172 P-001	24	Spring Guide
	2500	H & C	0238A1283 P-001	24	Spring Guide
25 - 66	1200 & 2000	H & C	A 184858 P-005	18	Spring Spacer
	All	HB & CB	A 184858 P-005	24	Spring Spacer
	2500	H & C	A 184858 P-005	24	Spring Spacer
25 - 67	1200 & 2000	H & C	0197A1557 P-001	18	Primary Contact Finger
	All	HB & CB	0197A1557 P-001	24	Primary Contact Finger
	2500	H & C	0534A0851 P-001	24	Primary Contact Finger
25 - 68	All	All	0216A6124 P-001	6	Contact Finger Retainer
25 - 69	All	All	0241V0980 P-001	24	Self Tapping Screw (10-32 x 3/8)
25 - 70	All	All	0243V0466 P-001	6	Buffer Clamp
25 - 71	All	All	0243V0468 P-001	3	Buffer
25 - 72	All	All	0197A1564 G-001	3	Barrier Assembly
25 - 73	1200	All	0216A6095 P-017	3	Arc Chute Support
	2000	All	0216A6095 P-007	3	Arc Chute Support
	2500	H & C	0169B2928 P-001	3	Arc Chute Support
25 - 74	2500	H & C	0238A1285 P-001	3	Jumper
25 - 75	2500	H & C	0238A1285 P-002	3	Jumper
25 - 76	2500	H & C	0238A1285 P-003	3	Jumper
25 - 77	2500	H & C	0238A1285 P-004	3	Jumper
25 - 78	All	All	0136B8936 G-001	3	Stud and Support
25 - 79	All	All	0197A1567 G-001	6	Flexible Connection
25 - 80	All	All	0108V0979 P-001	6	Locking Plate
25 - 81	All	All	0136B8933 G-001	3	Finger Cage
25 - 82	All	All	0108V0218 P-001	6	Outer Finger Spring
25 - 83	All	All	0108V0328 P-001	6	Inner Finger Spring
25 - 84	All	All	0101A1253 G-001	6	Arcing Contact Finger
25 - 85	All	All	0238A1220 G-001	3	Arcing Contact Assembly
25 - 86	2500	H & C	0238A1285 G-001	3	Jumper

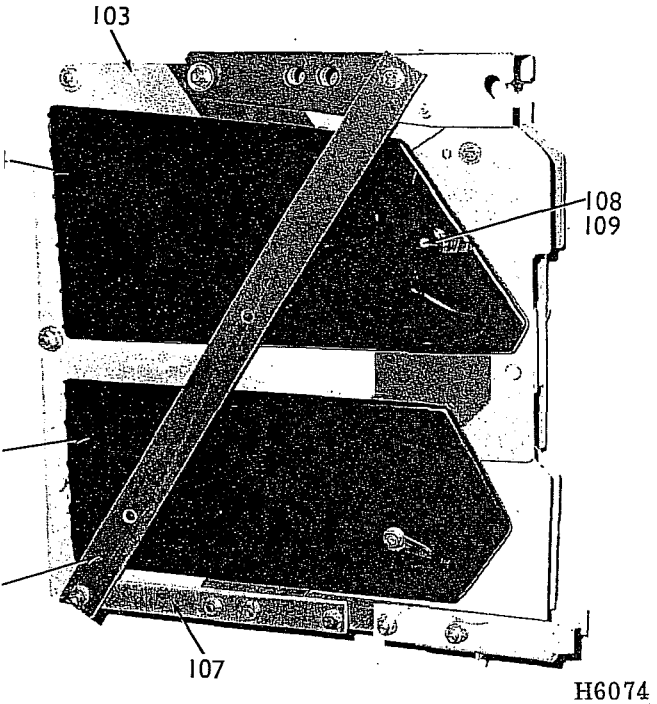

Complete Arc Chute

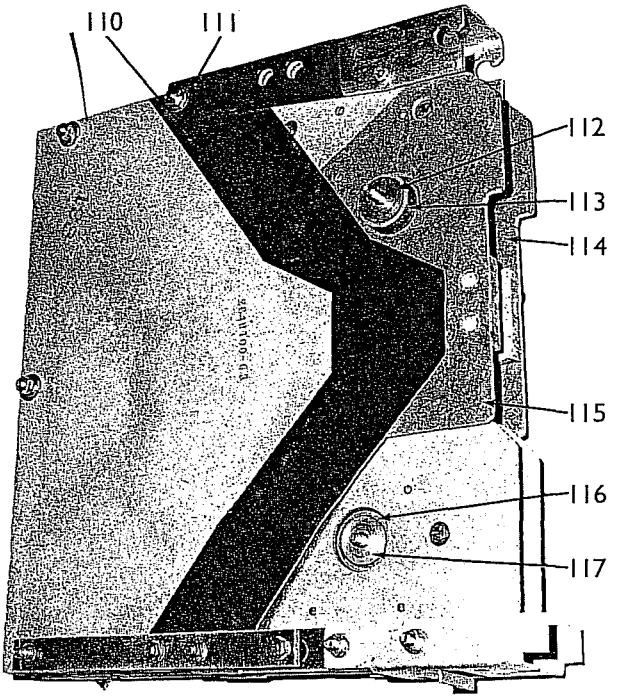

Arc Chute, Pole Pieces Removed

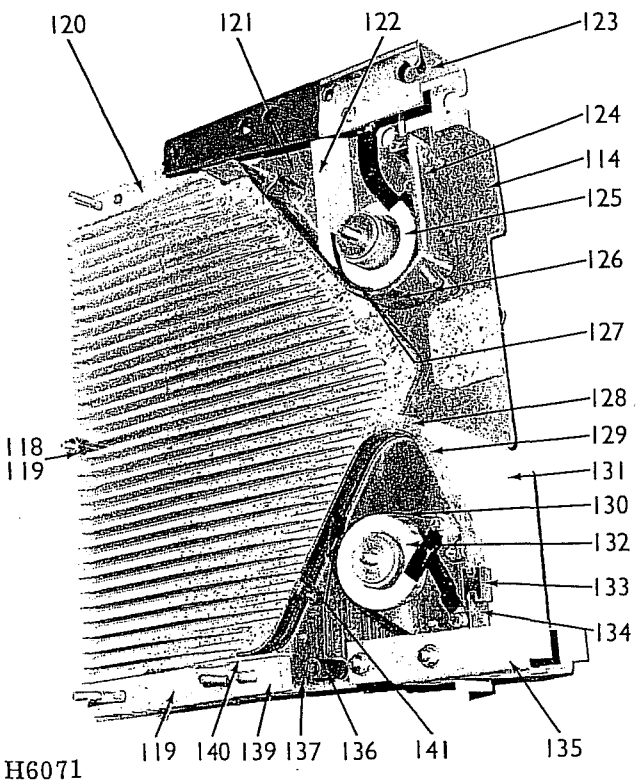

Arc Chute, Side Removed

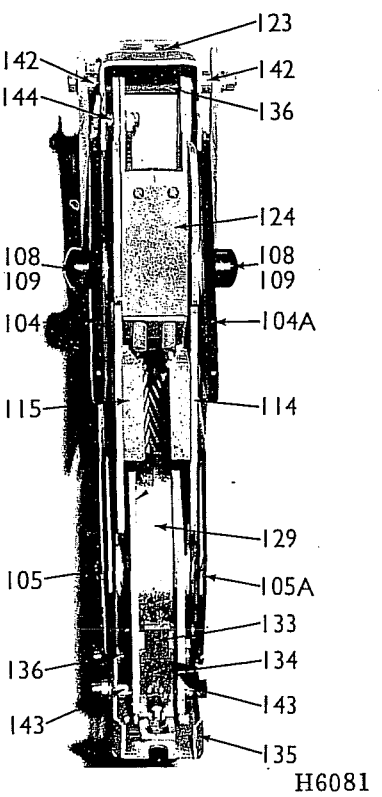

Arc Chute, Front View

Figure 26 (1 of 2) Arc Chute

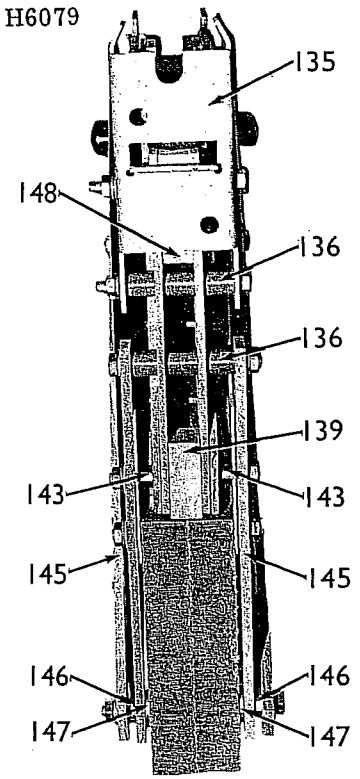

Arc Chute, Bottom View

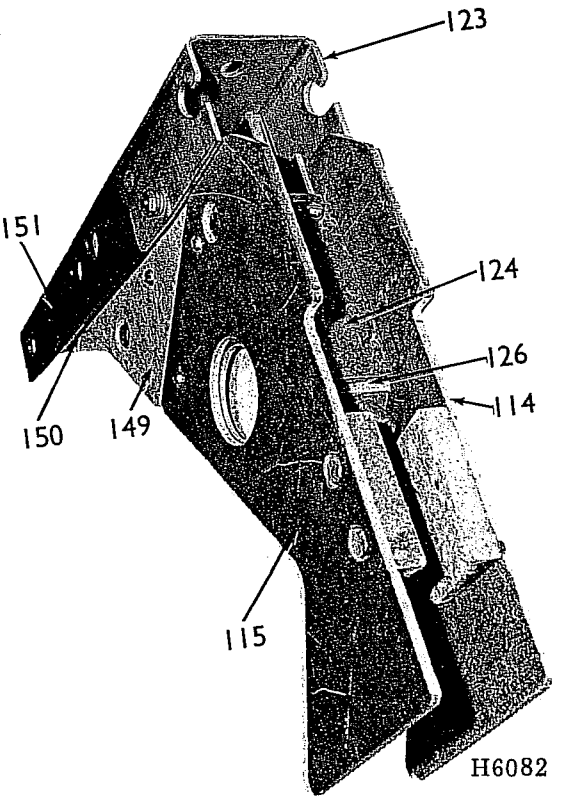

Upper Runner Assembly

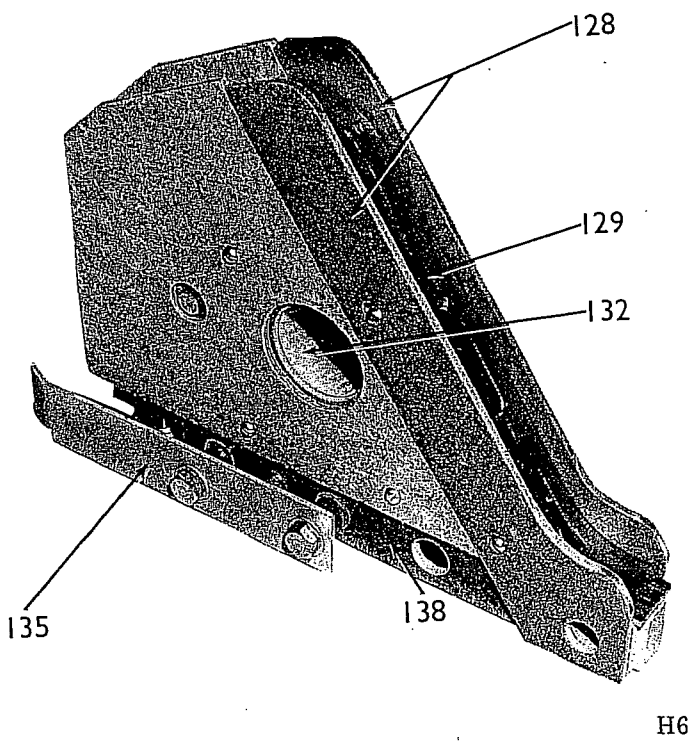

Lower Runner Assembly

Figure 26 (2 of 2) Arc Chute

Fig. & Ref. Numbers	Amps	Catalogue Number	No. Per Bkr.	Description
26 - 100	1200 & 2000	0473L0124 G-001	3	Arc Chute Complete
26 - 100	2500	0473L0124 G-004	3	Arc Chute Complete
26 - 101	All	0473L0124 G-002	3	Upper Arc Runner Assembly
26 - 102	All	0473L0124 G-003	3	Lower Arc Runner Assembly
26 - 103	All	0264B0100 G-003	3	Arc Chute Core Assembly
26 - 104	All	0136B8525 G-001	3	Upper Pole Piece Left Hand
26 - 104A	All	0136B8525 G-002	3	Upper Pole Piece Right Hand
26 - 105	All	0136B8525 G-003	3	Lower Pole Piece Left Hand
26 - 105A	All	0136B8525 G-004	3	Lower Pole Piece Right Hand
26 - 106	All	0197A1531 P-001	6	Brace
26 - 107	All	0197A1540 P-001	6	Lower Support
26 - 108	All	0216A6098 P-001	6	Insulation Cap
26 - 109	All	CV167814 P-001	6	Threaded Washer
26 - 110	All	0197A1547 P-001	6	Shield
26 - 111	All	0216A6097 P-001	6	Insulating Bushing
26 - 112	All	0197A1536 P-002	3	Upper Core
26 - 113	All	0197A1537 P-002	3	Upper Core Insulation
26 - 114	All	0136B8912 G-001	3	Right Hand Throat Piece Assembly
26 - 115	All	0136B8912 G-002	3	Left Hand Throat Piece Assembly
26 - 116	All	0197A1537 P-001	3	Lower Core Insulation
26 - 117	All	0197A1536 P-001	3	Lower Core
26 - 118	All	0188A9753 P-002	3	Core Spacer
26 - 119	All	K8517002 P-028	6	Core Spacer Shim
26 - 120	All	0197A1541 P-001	6	Core Shim (part not shown. Location only if required).
26 - 121	All	0136C8524 P-001	6	Upper Coil Support
26 - 122	All	0197A1548 P-001	3	Upper Runner Spacer
22 - 123	2500	0137C3583 P-004	3	Upper Support
26 - 123	1200 & 2000	0137C3583 P-001	3	Upper Support
26 - 124	All	0168B2465 P-001	3	Arc Shield
26 - 125	All	0136B8915 G-001	3	Upper Blowout Coil
26 - 126	All	0137C3104 G-001	3	Upper Arc Runner
26 - 127	All	0197A1548 P-002	3	Upper Coil Protector
26 - 128	All	0197A1532 P-001	6	Lower Mycalex
26 - 129	All	0127C3806 P-001	3	Lower Arc Runner
26 - 130	All	0197A1548 P-003	3	Lower Coil Protector
26 - 131	All	0197A1545 P-001	6	Lower Barrier
26 - 132	All	0136B8917 G-001	3	Lower Blowout Coil
26 - 133	All	0197A1538 P-001	3	Runner Spacer
26 - 134	All	0127C3806 P-002	3	Coil Connection
26 - 135	All	0168B2948 G-001	3	Lower Support
26 - 136	All	0197A1497 P-001	9	Fibre Spacer
26 - 137	All	0137C3542 P-002	3	Lower Coil Support Right Hand
26 - 138	All	0137C3542 P-001	3	Lower Coil Support Left Hand
26 - 139	All	0197A1544 P-001	3	Lower Runner Spacer
26 - 140	All	0197A1546 P-001	3	Mycalex Insulation Seal
26 - 141	All	0197A1542 P-001	3	Lower Runner Spacer
26 - 142	All	A184858 P-078	6	Steel Spacer (.44 long)
26 - 143	All	0199A0791 P-023	12	Steel Spacer (.88 long)
26 - 144	All	0197A1535 P-001	3	Upper Coil Connection
26 - 145	All	0197A1540 P-001	6	Lower Support
26 - 146	All	A184858 P-071	6	Steel Spacer (.22 long)
26 - 147	All	K8583644 P-053	6	Spacer Washer (.12 thick)
26 - 148	All	0197A1544 P-002	3	Spacer Block
26 - 149	All	0136B8893 P-001	6	Upper Insulation
26 - 150	All	0216A6096 P-001	6	Cup Washer (Not shown - Location only)
26 - 151	All	0197A1548 P-001	3	Gasket Seal (Not shown - Location only)

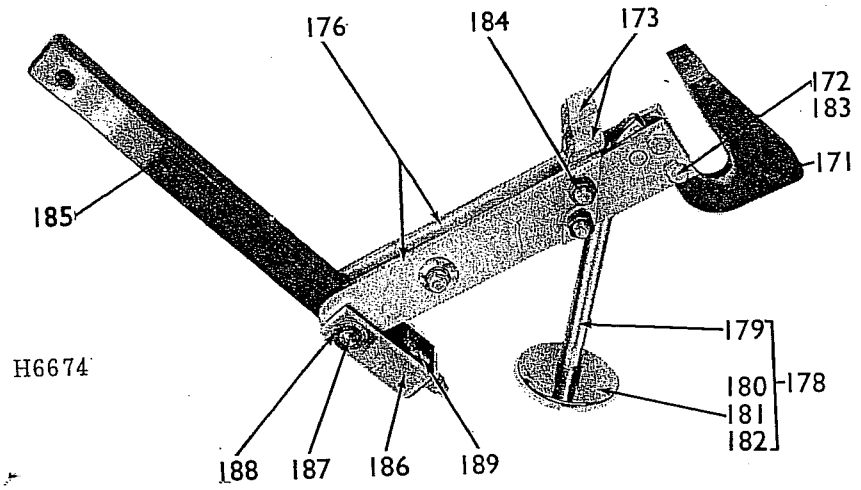

1200 Amp. Types H and C

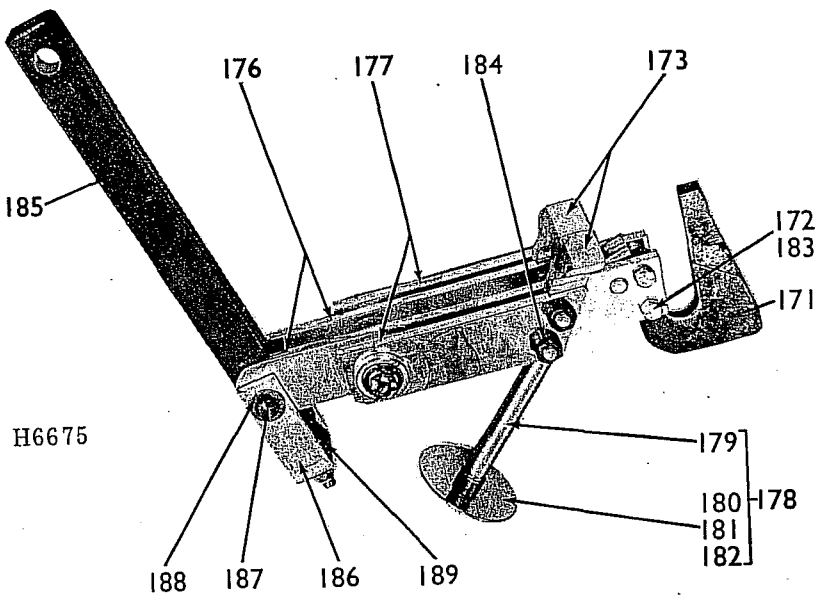

2000 Amp. Types H and C

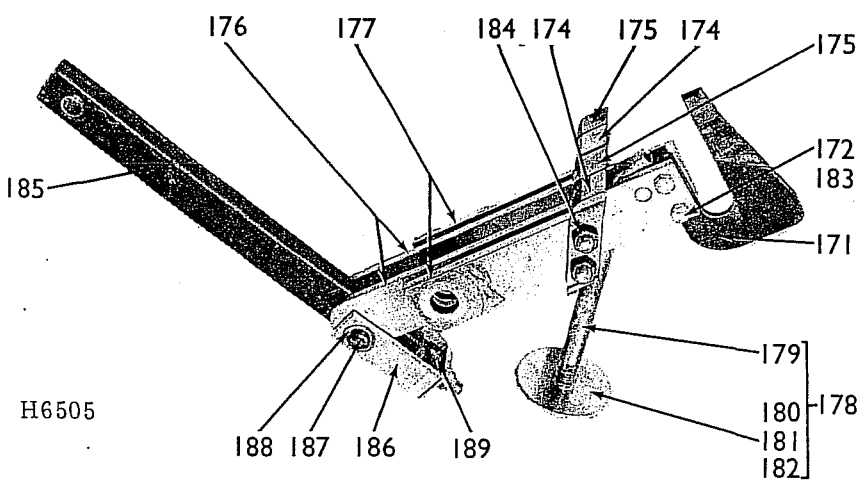

1200 and 2000 Amp. Types HB and CB

2500 Amp Types H & C

Figure 27 Movable Contact Arm Assembly

g. & Ref. umbers	Amps	Type	Catalogue Number	No. Per Bkr.	Description
- 170	1200	H & C	0473L0126 G-005	3	Bushing & Contact Arm Assembly*
	2000	H & C	0473L0126 G-006	3	Bushing & Contact Arm Assembly*
	1200	HB & CB	0473L0126 G-013	3	Bushing & Contact Arm Assembly*
	2000	HB & CB	0473L0126 G-014	3	Bushing & Contact Arm Assembly*
	2500	H & C	0473L0126 G-016	3	Bushing & Contact Arm Assembly*
- 171	All	All	0169B4560 G-002	3	Movable Arcing Contact
- 172	All	All	0197A1566 P-001	12	Contact Spacer
- 173	1200 & 2000	H & C	0197A1560 P-001	6	Movable Primary Contact
- 174	1200 & 2000	HB & CB	0534A0850 P-001	6	Movable Primary Contact
- 175	1200 & 2000	HB & CB	0534A0850 P-002	6	Movable Primary Contact
- 174	2500	H & C	0534A0850 P-001	6	Movable Primary Contact
- 175	2500	H & C	0534A0850 P-002	6	Movable Primary Contact
- 176	All	All	0154B0159 P-001	6	Contact Arm Long
- 177	2000 & 2500	All	0154B0158 P-001	6	Contact Arm Short
- 178	All	All	0168B2466 G-003	3	Puffer Tube Assembly Complete
- 179	All	All	0136B8931 G-001	3	Puffer Tube and Piston
- 180	All	All	0101A1769 P-001	3	Piston Ring
- 181	All	All	0188A9738 P-001	3	Piston Ring Equalizer Smooth
- 182	All	All	0188A9740 P-001	3	Piston Ring Expander Corrugated
- 183	All	All	0188A9739 P-001	6	Lock Nut 3/8-16
- 184	All	All	0188A9739 P-002	12	Lock Nut 1/2-13
- 185	All	All	0136B8986 G-002	3	Operating Rod
- 186	All	All	0105V0745 P-001	3	Yoke
- 187	All	All	K8585051 P-031	3	Pin
- 188	All	All	K8584554 P-034	6	Washer
- 189	All	All	0105V0995	3	Knurl Adjusting Nut

Complete with Bushing, Contact Arm Assembly and Operating Rod.

RENEWAL PARTS

OF

ML-13 STORED ENERGY MECHANISM

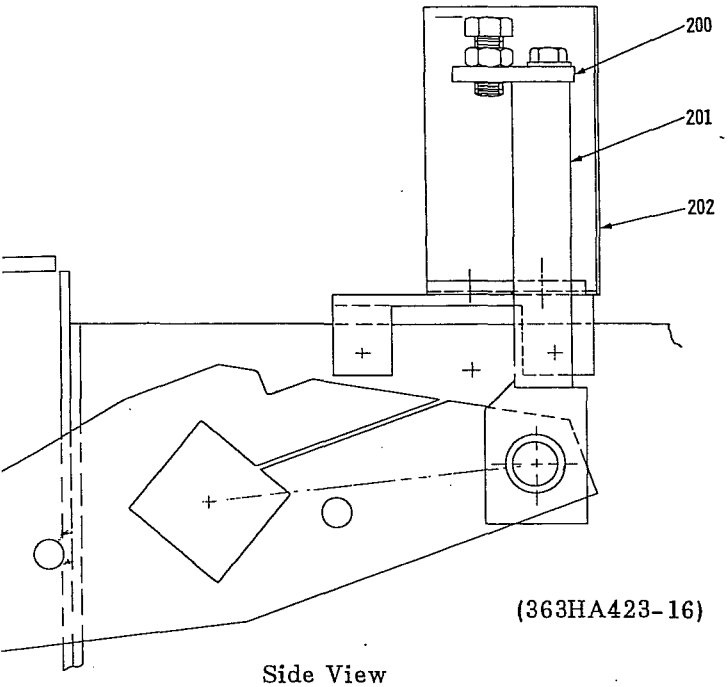

(363HA423-16)

Side View

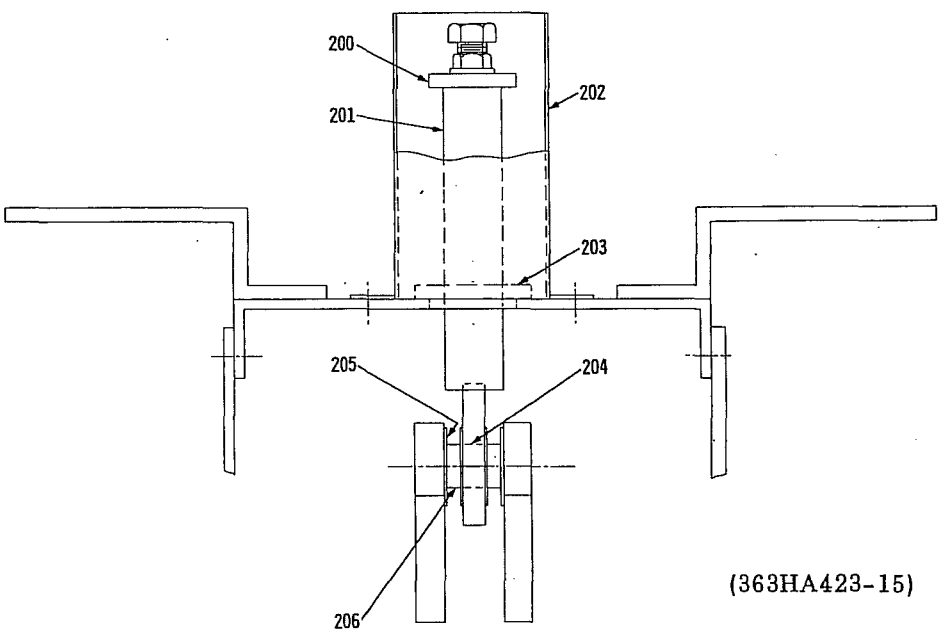

(363HA423-15)

Front View

Figure 28 Plunger Interlock For ML-13 Mechanism

Fig. & Ref. Numbers	Catalogue Number	No. Per Bkr.	Description
28 - 200	0216A6027 P-001	1	Plunger
28 - 201	0136B8989 G-001	1	Rod
28 - 202	0136B8988 G-001	1	Shield
28 - 203	0216A6420 P-002	1	Guide Plate
28 - 204	0216A7438AD P-004	1	Textolite Bushing
28 - 205	0197A1208 P-004	2	Washer
28 - 206	A184858 P-135	2	Steel Spacer (.22 long)

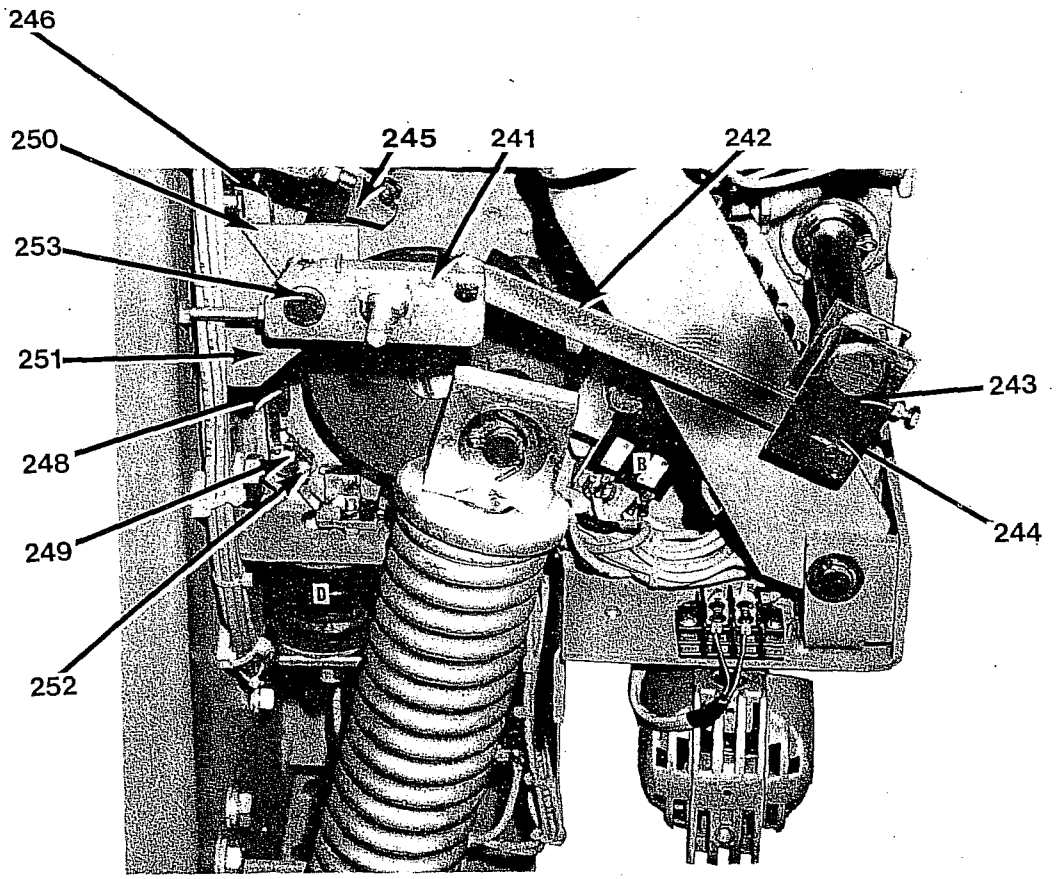

J7907

Figure 29 Spring Release For ML-13 Mechanism

Fig. & Ref. Numbers	Catalogue Number	No. Per Bkr.	Description
29 - 240	0473L0111 G-021	1	Spring Discharge Assembly
29 - 241	0136B8543 G-003	1	Crank
29 - 242	0197A1211 P-003	1	Link
29 - 243	0136B8589 P-002	1	Crank
29 - 244	0197A1401 P-003	1	Pin
29 - 245	0136B8541 P-007	1	Crank
29 - 246	0136B8541 G-002	1	Clevis
29 - 247	0197A1205 P-001	1	Rod
29 - 248	0136B8541 G-001	1	Clevis
29 - 249	0136B8541 P-009	1	Crank
29 - 250	0197A1136 P-001	1	Spring
29 - 251	0197A1211 P-001	1	Support
29 - 252	0136B8541 P-005	1	Pivot Pin
29 - 253	0197A1186 P-004	1	Shaft

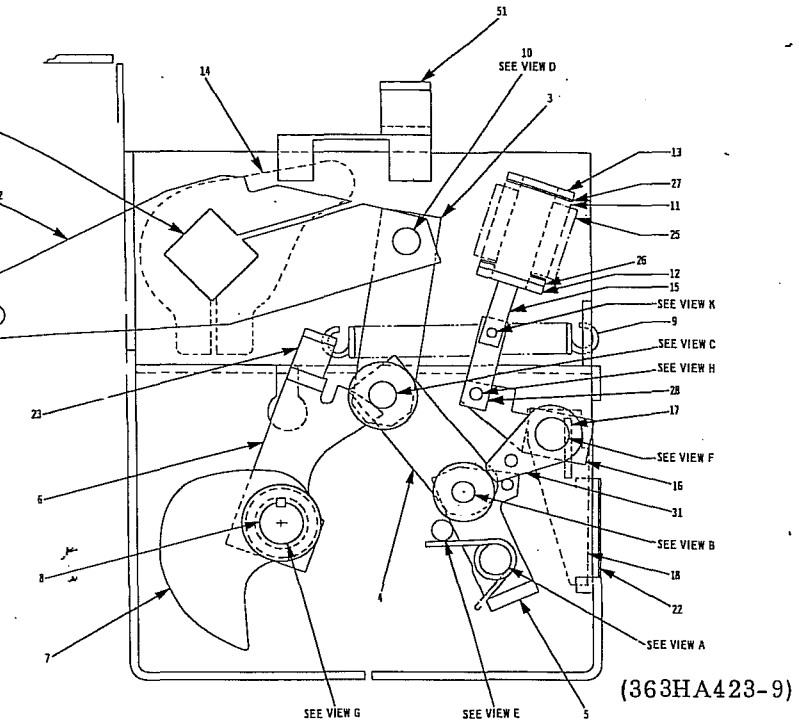

(363HA423-9)

Sectional Side View of
ML-13 Mechanism

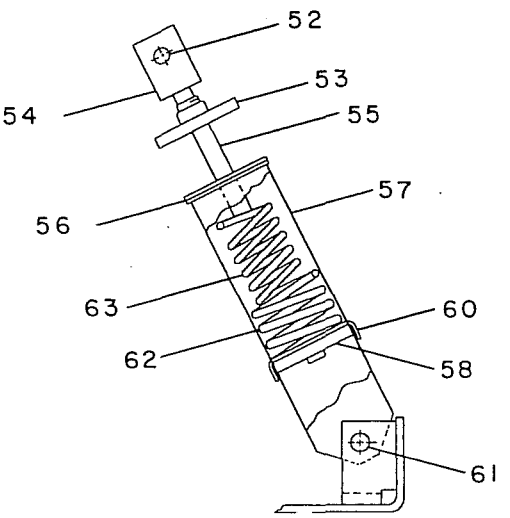

Opening Spring Assembly

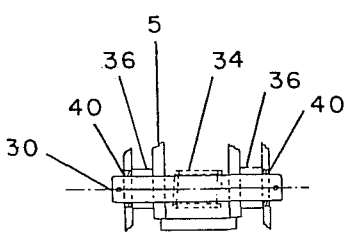

VIEW A

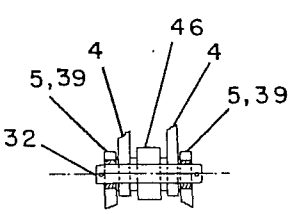

VIEW B

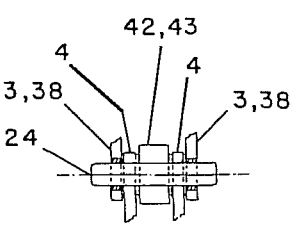

VIEW C

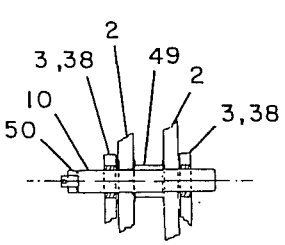

VIEW D

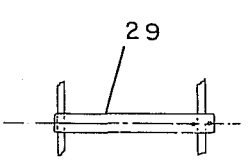

VIEW E

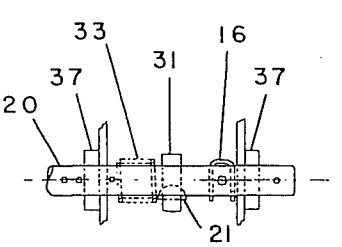

VIEW F

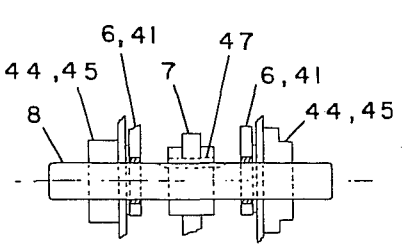

VIEW G

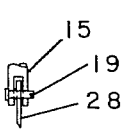

VIEW K

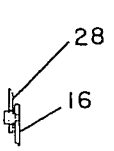

VIEW H

Figure 30 ML-13 Mechanism

Fig. & Ref. Numbers	Type	Catalogue Number	No. Per Bkr.	Description
30 - 1	All	0136B8500 P-001	4	Crank
30 - 2	All	0136B8497 P-001	2	Crank
30 - 3	All	0136B8488 G-001	1	Link
30 - 4	All	0197A1155 P-001	2	Link
30 - 5	All	0136B8496 G-001	1	Link With Rivet
30 - 6	All	0169B4557 G-001	1	Prop
30 - 7	All	0216A6216 P-001	1	Cam
30 - 8	All	0197A1165 P-001	1	Cam Shaft
30 - 9	All	0197A1132 P-001	1	Prop Spring Lower (Single)
30 - 9	HB & CB	0238A1314 P-001	1	Prop Spring Upper (Double)
30 - 10	All	0197A1163 P-001	1	Shaft
30 - 11	All	0136B8551 P-006	1	Pole Piece
30 - 12	All	0136B8552 G-001	1	Coil Support (Tripping)
30 - 13	All	0136B8552 P-010	1	Coil Support (Tripping)
30 - 14	#	0136B8499 P-001	2	Crank
	1200A H & C	0136B8499 P-001	1	Crank
30 - 15	All	0136B8551 P-004	1	Armature
30 - 16	All	0136B8537 G-001	1	Crank
30 - 17	All	0127C3622 P-007	1	Paddle
30 - 18	All	0136B8589 P-001	1	Crank
30 - 19	All	0197A1401 P-002	1	Pin
30 - 20	All	0136B8528 P-001	1	Trip Shaft
30 - 21	All	N3401 P-808	3	Key - Woodruff Alloy Steel
30 - 22	All	0197A1161 P-001	1	Mech.Frame Cover
30 - 23	H & C	0197A1187 P-001	1	Support Single Prop Spring
30 - 23	HB & CB	0169B4603 G-001	1	Support Double Prop Spring
30 - 24	All	0197A1183 P-001	1	Pin
30 - 25	All	25782-5	**	48V DC Trip Coil
	All	25782-4	**	Trip Coil 110V DC - 125V DC
	All	25781-3	**	Trip Coil 250V DC
	All	25782-5	**	Trip Coil 230V AC
30 - 26	All	K8581723 P-036	4	Washer Press Board 1/8 thk.
30 - 27	All	K8581723 P-035	10	Washer Press Board 1/32 thk.
30 - 28	All	0127C3622 P-011	1	Link
30 - 29	All	0197A1186 P-001	1	Stop Pin
30 - 30	All	0197A1182 P-001	1	Pin
30 - 31	All	0136B8516 P-001	1	Latch
	H & C	0136B8516 P-003	2	Trip Latch Roller Bearing
	HB & CB	0197A1417 P-001	2	Trip Latch Roller
	HB & CB	0238A1496 P-001	1	Trip Latch Roller Shaft
30 - 32	All	0197A1182 P-002	1	Pin
30 - 33	All	0197A1131 P-001	1	Latch Spring
30 - 34	All	0197A1130 P-001	1	Reset Spring
30 - 36	All	A184858 P-180	2	Spacer
30 - 37	All	0191A7372 P-005	2	Bearing Assembly
30 - 38	H & C	0216A7438 AD P-004	4	Bushing Textolite
30 - 38	HB & HC	0238A1383 P-001	4	Bushing Bronze
30 - 39	H & C	0216A7438AC P-004	2	Bushing Textolite
30 - 39	HB & HC	0238A1383 P-002	2	Bushing Bronze
30 - 40	All	0238A1383 P-002	2	Bushing Bronze

Fig. & Ref. Numbers	Type	Catalogue Number	No. Per Bkr.	Description
30 - 41	All	0216A7438AH P-004	2	Bushing
30 - 42	All	0197A1312 P-005	1	Bearing
30 - 43	All	0197A1312 P-006	1	Bearing Inner Race
30 - 44	All	0197A1312 P-003	2	Bearing
30 - 45	All	0197A1312 P-004	2	Bearing Inner Race
30 - 46	All	0169B1830 P-007	1	Bearing - Roller
30 - 47	All	0197A1199 P-001	1	Key - Square
30 - 49	All	A184858 P-157	1	Spacer
30 - 50	All	0197A1160 P-001	1	Link Open Close Indicator
30 - 51	All	0197A1533 G-001	1	Bracket and Handle Assembly
30 - 52	All	0191A7386 P-001	△	Pin
30 - 53	All	0191A7384 P-001	△	Plate
30 - 54	All	0191A7383 P-001	△	Clevis
30 - 55	All	0191A7362 P-005	△	Rod
30 - 56	All	0108V0262 P-001	2△	Buffer
30 - 57	All	0136B8502 G-001	△	Yoke
30 - 58	All	0191A7384 P-002	△	Retaining Plate
30 - 60	All	0136B8405 P-002	△	Spring Guide
30 - 61	All	0592B0636AS P-426	△	Pin
30 - 62	#	0191A7365 P-001	2	Outer Spring
	1200A H&C	0191A7365 P-001	1	Outer Spring
30 - 63	1200A H&C	0191A7366 P-001	1	Inner Spring
30 - 64	All	0197A1157 P-002	1	Square Shaft

**(1) Required for tripping possible (1) for spring release too may be different voltages. Check nameplates for requirements.

△ (1) For 1200 Amp Type H&C
(2) For 2000 Amp Type H&C and All Type HB&CB
(2) For 2500 Amp Type HEC

2000 & 2500 Amp Type H&C and All Type HB&CB.

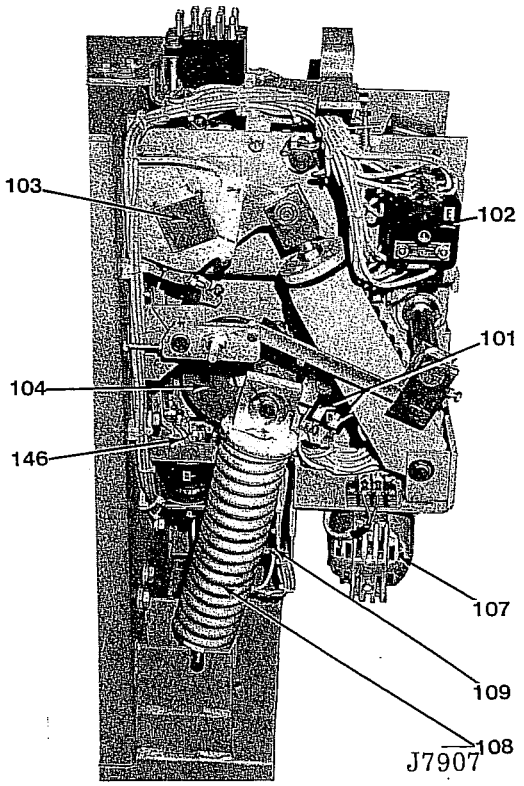

Left Side View

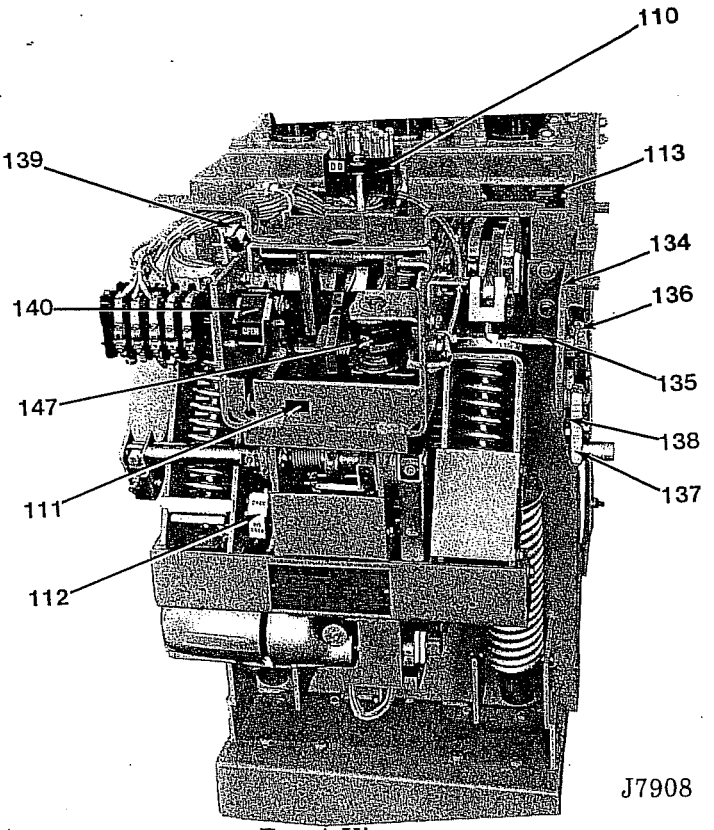

Front View

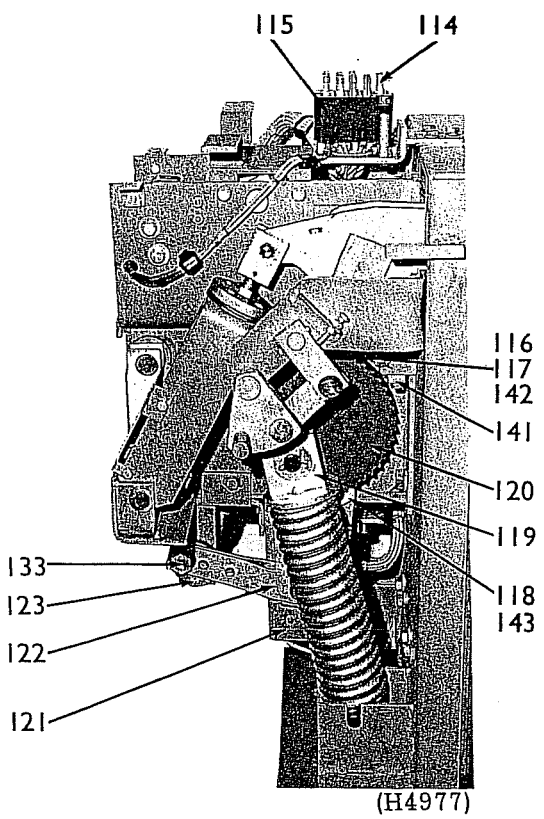

Right Side View

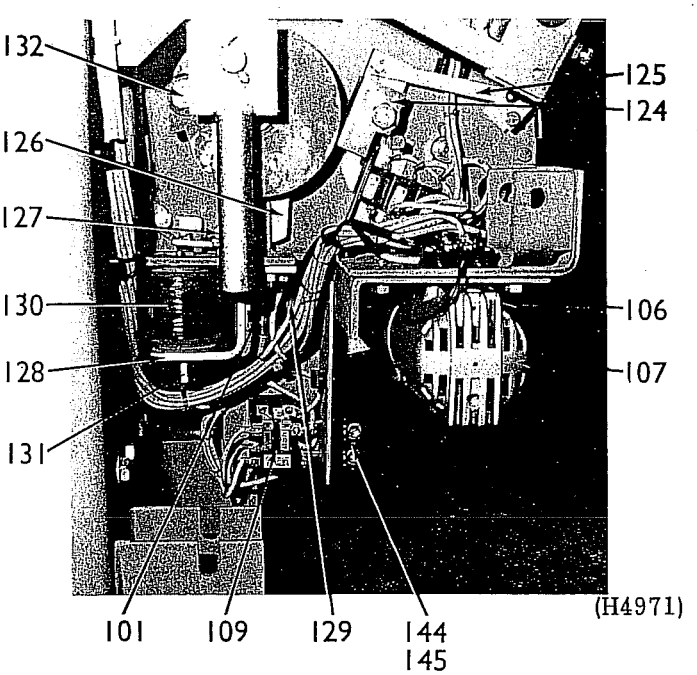

Left Side View (Bottom)

Figure 31 ML-13 Stored Energy Mechanism

Fig. & Ref. Numbers	KV	Type	Catalogue Number	No. Per Bkr.	Description
31 - 101	All	All	0132B3131 G-002	5	Switch (N.O.)
31 - 102	All	All	0192A3614 G-004	1	Auxiliary Switch Type SBM
	All	All	0237A3420 G-001	1	Auxiliary Switch Type SB1
31 - 103	All	All	0197A1157 P-002	1	Square Shaft
31 - 104	All	All	0216A6217 P-001	1	Switch Cam
31 - 105	All	All	0132B3131 G-001	1	Switch (N.C.)
31 - 106	All	All	0197A1201 G-001	1	Manual Close Rod
31 - 107	All	All	0105C9393 P-001	1	Motor 48V DC
	All	All	0105C9393 P-002	1	Motor 110V DC - 125V DC
	All	All	0105C9393 P-003	1	Motor 220V DC - 250V DC
	All	All	0105C9393 P-003	1	Motor 230V AC
31 - 108	All	H & C	0473L0113 G-001	2	Closing Spring Asm.
	All	HB & CB	0473L0113 G-008	2	Closing Spring Asm.
31 - 109	All	All	0169B4663 G-001	1	Relay 48V DC
	All	All	0169B4663 G-002	1	Relay 110V DC - 125V DC
	All	All	0169B4663 G-003	1	Relay 220V DC - 250V DC
	All	All	0169B4663 G-004	1	Relay 230V AC
31 - 110	All	All	0354B0451 G-002	1	Secondary Coupler (Block & Contacts)
31 - 111	All	All	0197A1231 G-001	1	Operation Counter
31 - 112	All	All	0168B2829 G-001	1	Indicator
31 - 113	All	All	K4424901 P-001	1	Nameplate (Interchange)
31 - 114	All	All	V4412491 P-001	1	Contact Plug
31 - 115	All	All	0102A9445 P-001	1	Socket
31 - 116	All	All	0136B8505 P-001	1	Latching Pawl (Outside)
31 - 117	All	All	0136B8505 P-002	1	Latching Pawl (Inside)
	All	All	0216A7438AB P-005	2	Latching Pawl Bushing
31 - 118	All	All	0136B8504 P-001	1	Drivng Pawl
	All	All	0216A7438AC P-006	1	Driving Pawl Bushing
31 - 119	All	All	0136B8520 G-001	1	Bearing Block
31 - 120	All	All	0473L0111 G-016	1	Ratchet Wheel & Stop
31 - 121	All	All	0197A1365 G-001	1	Crank Assembly
31 - 122	All	All	0197A1198 G-001	1	Link
31 - 123	All	All	0136B8481 P-001	1	Eccentric
31 - 124	All	All	0136B8535 G-001	1	Striker
31 - 125	All	All	0127C3622 P-003	1	Link
31 - 126	All	All	0216A6185 G-001	1	Close Latch
31 - 127	All	All	0191A7372 P-004	2	Close Latch Shaft Bearing
	All	All	0197A1189 P-001	1	Close Latch Shaft
31 - 128	All	All	0136B8552 G-002	1	Close Coil Support
31 - 129	All	All	0197A1128 P-001	1	Close Latch Spring
31 - 130	All	All	25782-5	1**	Spring Release Coil 48V DC
	All	All	25782-4	1**	Spring Release Coil 110 - 125V DC
	All	All	25782-3	1**	Spring Release Coil 220 - 250V DC
	All	All	0197A1442 G-001	1**	Spring Release Coil 230V AC
31 - 131	All	All	0136B8551 G-001	1	Armature (Closing)
31 - 132	All	All	0191A7372 P-006	1	Cam Follower
31 - 133	All	All	0136B8481 P-002	1	Hex. Charging Stud

Fig. & Ref. Numbers	Amps	Type	Catalogue Number	No. Per Bkr.	Description
31 - 134	All	All	0136B8970 G-001	1	Positive Interlock Bracket
31 - 135	All	All	0197A1203 P-002	1	Positive Interlock Shaft
31 - 136	All	All	0115V0877 P-001	1	Positive Interlock Crank
31 - 137	All	All	0216A6226 G-001	1	Positive Interlock Arm and Roller
31 - 138	All	All	0216A6400 G-001	1	Positive Interlock Link
31 - 139	All	All	0238A1351 P-001	1	Striker
31 -	All	All	0238A1350 P-001	1	Spring
31 - 140	All	All	0168B2844 G-001	1	Open-Close Indicator
31 - 141	All	All	0127C3578 P-003	1	Spring Support
31 - 142	All	All	0197A1129 P-001	2	Latching Pawl Spring
31 - 143	All	All	0197A1138 P-001	1	Driving Pawl Spring
31 - 144	All	C	0177A1379 P-007	1	Fuse Cutout 30° - 250V
31 - 145	All	C	25-30	2	Fuse 30 amp. for 48V Control
	All	C	25-15	2	Fuse 15 amp. for 125V Control
	All	C	25-10	2	Fuse 10 amp. for 230 and 250V Control
31 - 146	All	All	0136B8551 P-006	1	Pole Piece
31 - 147	All	All	25782-5	**	Trip Coil 48V DC
	All	All	25782-4	**	Trip Coil 110-125V DC
	All	All	25782-3	**	Trip Coil 250V DC
	All	All	25782-5	**	Trip Coil 230V AC

**(1) required for spring release possibly (1) for tripping too, may be same voltage - Check nameplate for requirements.

INDUSTRIAL APPARATUS
DEPARTMENT
PETERBOROUGH — ONTARIO

CANADIAN GENERAL ELECTRIC

TPP-04-78

PRINTED IN CANADA

INSTRUCTIONS AND RECOMMENDED PARTS FOR MAINTENANCE

GEK-31111A

THIS PUBLICATION FOR GENERAL INTEREST ONLY
Designs, dimensions shown may be incorrect for use in Canada.
CANADIAN GENERAL ELECTRIC COMPANY LIMITED

MAGNE-BLAST CIRCUIT BREAKER

TYPE
AM-13.8-500-7
1200 & 2000 AMPERE
WITH ML-13 MECHANISM

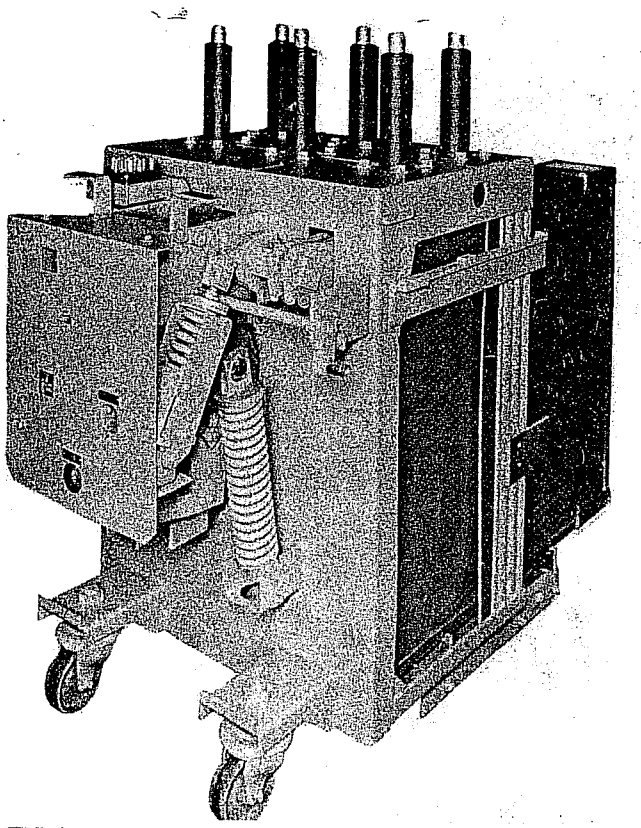

Contents:

INTRODUCTION 3
RECEIVING, HANDLING AND STORAGE 3
INSTALLATION 3
DESCRIPTION OF OPERATION 4
ADJUSTMENTS 10
GENERAL MAINTENANCE 14
RENEWAL PARTS 28

INSTALLATION

1. Remove the box barriers and mechanism cover and make a visual inspection to ascertain that the breaker and mechanism is in satisfactory condition. Check all bearing surfaces of the mechanism for lubrication. Refer to section on lubrication page 16

2. Charge the breaker closing springs manually using a 5/8" ratchet wrench to turn the driving eccentric (4) Figure 1. Turning the eccentric counter clockwise will advance the ratchet wheel and compress the springs.

8034807)

These instructi... contingency to b... or should particu... be referred to th...

possible desired should

SWITCHGEAR PRODUCTS DEPARTMENT

GENERAL ELECTRIC

PHILADELPHIA, PA.

MAGNE-BLAST CIRCUIT BREAKER

AM-13.8-500-7 (Δ)

Δ Letter Designation B, C, H, K, N used immediately following the model number indicates basic design features.

INTRODUCTION

The Magneblast breaker is the removable and interchangeable interrupting element used in metal-clad switchgear to provide reliable control and protection of electrical apparatus and power systems.

The AM-13.8-500 Magneblast Breaker is available with continuous current ratings of 1200 amperes and 2000 amperes in accordance with applicable industry standards. Refer to the breaker nameplate for complete rating information of any particular breaker. The nameplate also describes the control power requirements for that breaker. The application of a breaker must be such that its voltage, current, and interrupting ratings are never exceeded. Since this book is written to include all ratings of the breaker as well as several design variations, the instructions will be of a general character and all illustrations will be typical unless otherwise specified.

PROPER INSTALLATION AND MAINTENANCE ARE NECESSARY TO INSURE CONTINUED SATISFACTORY OPERATION OF THE BREAKER. The following instructions will provide complete information for placing magne-blast breakers in service and for maintaining satisfactory operation.

RECEIVING, HANDLING AND STORAGE

Receiving and Handling

Each breaker is carefully inspected and packed for shipment. Immediately upon receipt of the circuit breaker, an examination should be made for any damage sustained in transit. If injury or rough handling is evident, a damage claim should be filed immediately with the transportation company and the nearest General Electric Sales Office should be notified.

It is expected that due care will be exercised during the unpacking and installation of the breaker so that no damage will occur from careless or rough handling, or from exposure to moisture or dirt. Check all parts against the packing list to be sure that no parts have been overlooked.

Storage

It is recommended that the breaker be put into service immediately in its permanent location. If this is not possible, the following precautions must be taken to insure the proper storage of the breaker:

1. The breaker should be carefully protected against condensation, preferably by storing it in a warm dry room, since water absorption has an adverse effect on the insulation parts. Circuit breakers for outdoor metal-clad switchgear should be stored in the equipment only when power is available and the heaters are in operation to prevent condensation.
2. The breaker should be stored in a clean location, free from corrosive gases or fumes; particular care should be taken to protect the equipment from moisture and cement dust, as this combination has a very corrosive effect on many parts.
3. Unfinished surfaces of rollers, latches, etc., of the operating mechanism should be coated with grease to prevent rusting.

If the breaker is stored for any length of time, it should be inspected periodically to see that rusting has not started and to insure good mechanical condition. Should the breaker be stored under unfavorable atmospheric conditions, it should be cleaned and dried out before being placed in service.

INSTALLATION

1. Remove the box barriers and mechanism cover and make a visual inspection to ascertain that the breaker and mechanism is in satisfactory condition. Check all bearing surfaces of the mechanism for lubrication. Refer to section on lubrication page 16 and Figure 17.
2. Charge the breaker closing springs manually using a 5/8" ratchet wrench to turn the driving eccentric (4) Figure 1. Turning the eccentric counter clockwise will advance the ratchet wheel and compress the springs.

(Cover photo 8034807)

These instructions do not purport to cover all details or variations in equipment nor to provide for every possible contingency to be met in connection with installation, operation or maintenance. Should further information be desired or should particular problems arise which are not covered sufficiently for the purchaser's purposes, the matter should be referred to the General Electric Company.

When the springs have reached the fully charged position the indicator (1) will read "CHARGED", and the driving pawl will be raised from the ratchet wheel teeth. Additional turning of the eccentric will not advance the ratchet wheel.

Insert the spring blocking device (6) and manually discharge the springs against the pins by pushing the manual release button (3). The springs are now blocked and slow closing of the breaker contacts can be accomplished by again turning the driving eccentric with a 5/8" ratchet wrench.

During the slow closing operation check to insure that the mechanism does not stick or bind during the entire stroke, that it latches securely in the closed position, and that it trips freely when the manual trip lever is operated. At this time, also check the following adjustments:

a. Arcing contact wipe (Refer to page 10)
b. Primary contact wipe (Refer to page 10)
c. Primary contact gap (Refer to page 11)

DO NOT WORK ON EITHER THE BREAKER OR MECHANISM UNLESS THE CLOSING SPRINGS ARE BLOCKED AND THE OPENING SPRINGS HAVE BEEN TRIPPED OPEN OR MECHANICALLY BLOCKED. THIS PRECAUTION IS REQUIRED TO PREVENT ACCIDENTAL CLOSING OR TRIPPING.

The closing springs should now be unblocked. Rotate the driving eccentric until the indicator reads "CHARGED" and the ratchet wheel does not advance. The spring blocking device can now be removed.

3. Connect the test coupler to the circuit breaker and operate it electrically several times. Check the control voltage as described under "CONTROL POWER CHECK" (Page 14).

4. Disconnect the test coupler and replace box barrier.

5. If the breaker has been stored for a long period of time, it is recommended that the insulation be checked with a standard 60 hertz high potential test. Refer to Insulation Test (Page 16).

   NOTE: If the breaker secondary wiring is to be given a hi-potential test at 1500 volts, remove both the motor leads from the terminal connection. Failure to disconnect the motor from the circuit may cause damage to the winding insulation.

6. Lubricate the silver portion of the ball contact at the top of the breaker bushing and the rear portion of the ground shoe, by applying a thin film of contact lubricant D50H47.

7. Refer to metal-clad instruction book GEH-1802 for instructions on inserting the breaker into the metal-clad unit.

DESCRIPTION OF OPERATION

The Magneblast Breaker has two principal components; the breaker element and the operating mechanism:

The breaker element is three similar pole units, each of which includes the current carrying parts, main and arcing contacts, interrupter, and an enclosing barrier system that provides insulation between poles, or phases and to ground. The primary connections to the associated metal-clad switchgear are made through the ball contacts at the top of the breaker bushings.

The operating mechanism type ML-13 is of the stored energy type designed to give high speed closing and opening. The mechanism will operate on a-c or d-c voltage as indicated on the breaker nameplate. Closing and opening operations are controlled either electrically from the metal-clad unit and remote location, or mechanically by the manual close and trip levers on the breaker. All secondary connections from the breaker to the metal-clad unit are made through the coupler (1) Figure 2.

A spring release interlock, Figure 3, is provided to discharge both the closing and opening springs when the breaker is withdrawn from or inserted into the metal-clad unit.

A positive interlock (3) Figure 4 and interlock switch (2) Figure 2, are provided between the breaker and metal-clad unit to prevent raising or lowering of the breaker in the unit while in a closed position and to prevent a closing operation when the breaker is not in either the fully raised or lowered position. To insure that this interlock will function during manual, as well as during electrical operation of the equipment, both mechanical and electrical blocking is provided. If for any reason the closing springs should be discharged against the positive interlock the mechanism will be jammed and be inoperable. The mechanism can be released and returned to the reset position by pushing in on the trip lever (8) Figure 5. It may require more than normal force to release the interlock.

A plunger interlock, Figure 14 can be provided when required to operate a stationary auxiliary switch and/or a rod interlock mounted in the metal-clad unit.

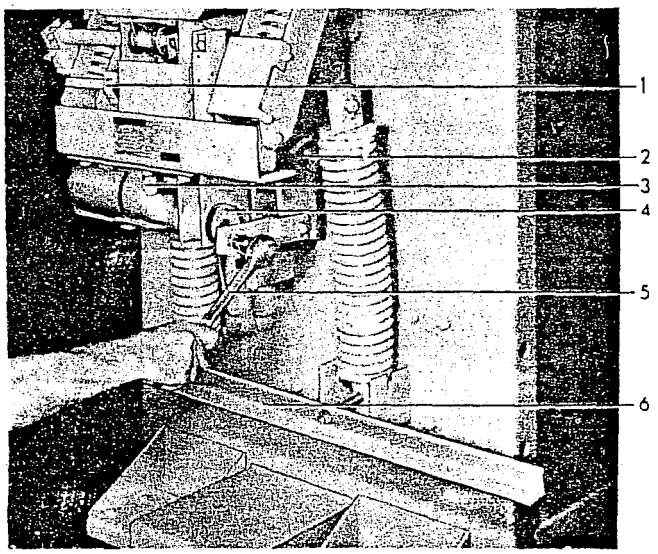

Figure 1. (8040935) Spring Blocking Device

1. Charge - Discharge Indicator
2. Driving Pawl
3. Manual Close Button
4. Eccentric
5. Manual Charging Wrench
6. Spring Blocking Device

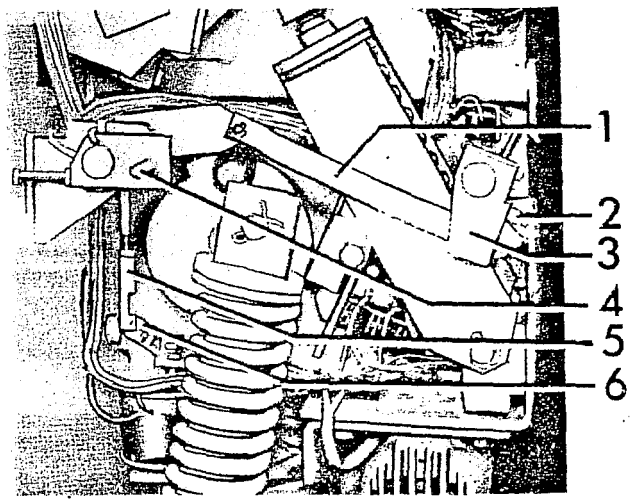

Figure 3. (8038805) Spring Discharge Linkage

1. Link
2. Adjusting Bolt
3. Trip Latch Crank
4. Discharge Crank
5. Adjusting Clevis
6. Spring Release Crank

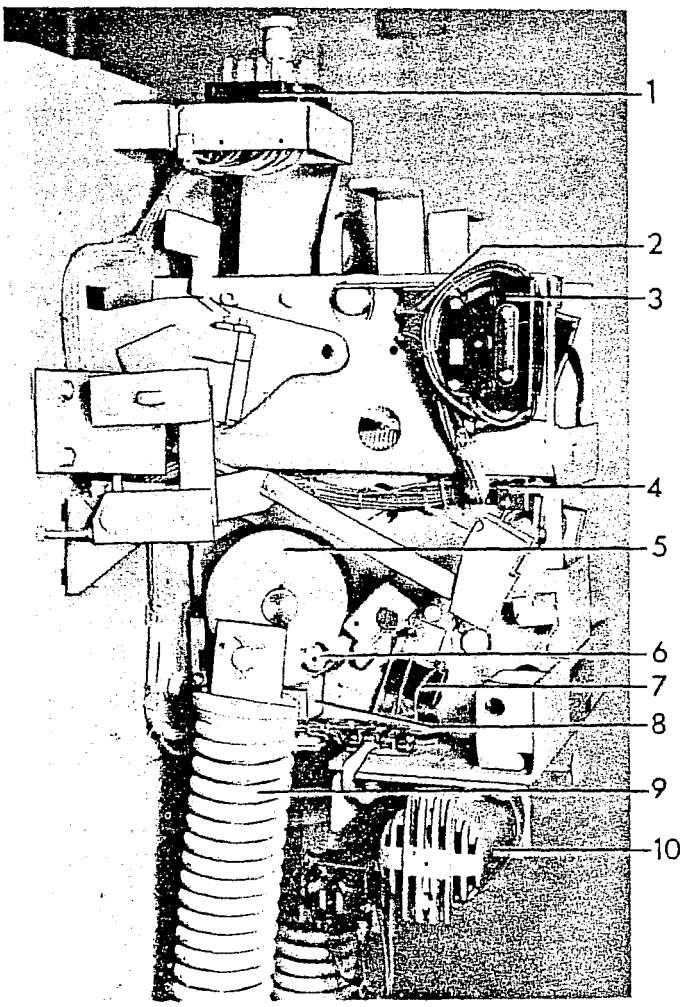

Figure 2. (8040932) Left Side View ML-13 Operating Mechanism

1. Secondary Coupler
2. Interlock Switches
3. Auxiliary Switch
4. Latch Checking Switch
5. Switch Cam
6. Closing Roller
7. Power Switches
8. Closing Latch
9. Closing Springs
10. Motor

When the breaker is used interchangeably
1 type MS-13 solenoid operated breakers in
36 metal-clad units, fuses are mounted on
breaker for protection of the motor and
sing circuit. These breakers are identified
"C" or "K" suffix in the breaker nomenclature.

In cases where breakers with type ML-13
chanisms must match and line up with breakers
ing type ML-11 mechanisms the spring charging
cuit for both mechanisms should be fused with
s Company Fusetrons as follows:

Cont. Volt.	Fuse Size	Cat. No.
48v d-c	10A	FRN 10
110v d-c	4A	FRN 4
125v d-c	4A	FRN 4
115v a-c	4A	FRN 4
220v d-c	2.5A	FRN 2.5
250v d-c	2.5A	FRN 2.5
230v a-c	2.5A	FRN 2.5

Spring Charging

The mechanism has a high speed gear motor (10) Figure 5, that compresses a set of closing springs through the action of an eccentric, ratchet, and pawl assembly. The rotary action of the motor is converted to a straight stroke through the eccentric (11) Figure 4, and a lever that carries a spring loaded driving pawl (2) Figure 1.

The pawl advances the ratchet wheel (6) Figure 4 a few degrees each stroke where it is held in position by the latching pawls (2). When the ratchet wheel has been rotated approximately 180 degrees the closing spring (12) will be fully compressed. As the ratchet wheel continues to rotate, the spring load will shift over center and attempt to discharge. After a few degrees of rotation, the closing roller (6) Figure 2, will engage the closing latch (8) and the compressed springs will be held by the latch until a closing operation is required. During the last few degrees of the ratchet wheel rotation the power switches (7)

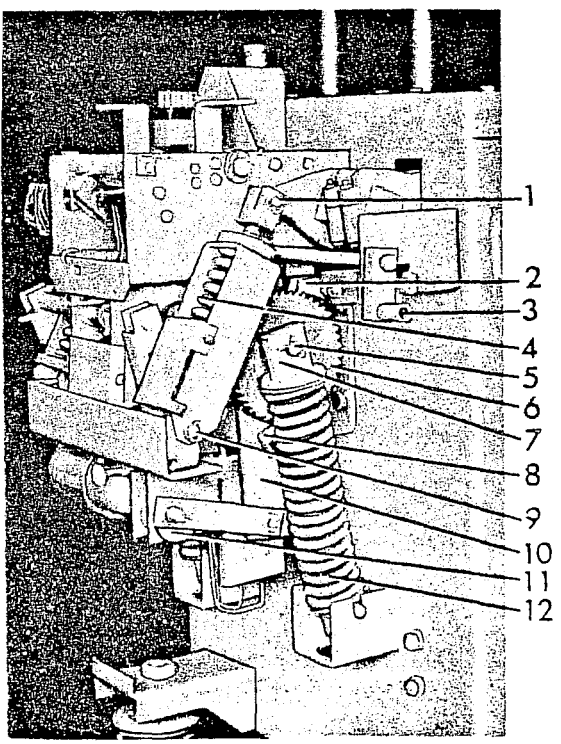

gure 4. (8038804) Right Side View ML-13 Operating Mechanism

1. Upper Spring Pin
2. Latching Pawls
3. Positive Interlock Roller
4. Opening Spring
5. Cam Shaft
6. Ratchet Wheel
7. Bearing Block
8. Driving Pawl
9. Lower Spring Pin
10. Driving Pawl Lever
11. Eccentric
12. Closing Spring

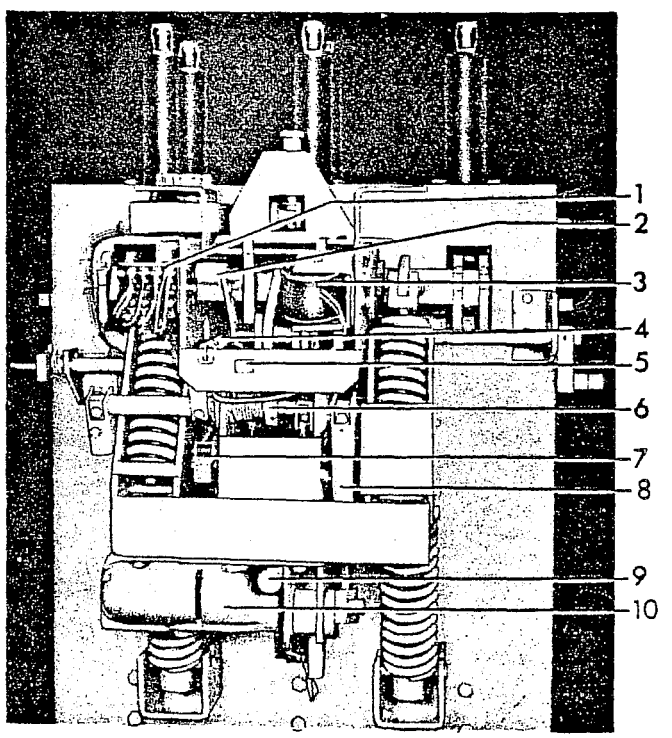

Figure 5. (8038803) Front View ML-13 Operating Mechanism

1. Auxiliary Switch
2. Open - Close Indicator
3. Trip Coil
4. Prop Spring
5. Operation Counter
6. Trip Latch
7. Charge-Discharge Indicator
8. Manual Trip Lever
9. Manual Close Button
10. Motor

are opened and the driving pawl is raised from the ratchet wheel surface. This allows the motor and driving mechanism to coast to a natural stop expending all residual energy.

During the time the springs are being compressed a relay (17) Figure 6, is energized to hold the closing circuit open. The relay remains energized until the springs are fully charged and the control switch contacts are re-set.

The closing springs may be charged manually if control voltage is lost. A 5/8" ratchet wrench can be used to rotate the eccentric in a counter clockwise direction until the indicator reads "Charged" and the driving pawl is raised from the ratchet wheel. The use of the ratchet wrench provides for maximum safety in the event that control power is suddenly restored without warning. In this event, the motor drive will override the ratchet wrench and continues to charge the springs.

Closing Operation

The breaker can be closed electrically by energizing the closing solenoid (15) Figure 6, or manually by pushing the close button (9) Figure 5. In either method the closing latch is rotated from under the closing roller to release the closing springs (9) Figure 2. The energy in the springs is used to rotate a cam (16) Figure 7 and close the breaker through the operating mechanism linkage. During the closing operation the mechanism is trip-free at all times. The breaker is held closed by the closing prop (14) moving into position under the prop pin (13). During the closing operation the opening springs (4) Figure 4, are compressed and held ready for an opening operation with the trip latch (8) Figure 7 bearing against the trip latch roller (9).

When the closing operation of the breaker is completed and the closing latch is fully reset,

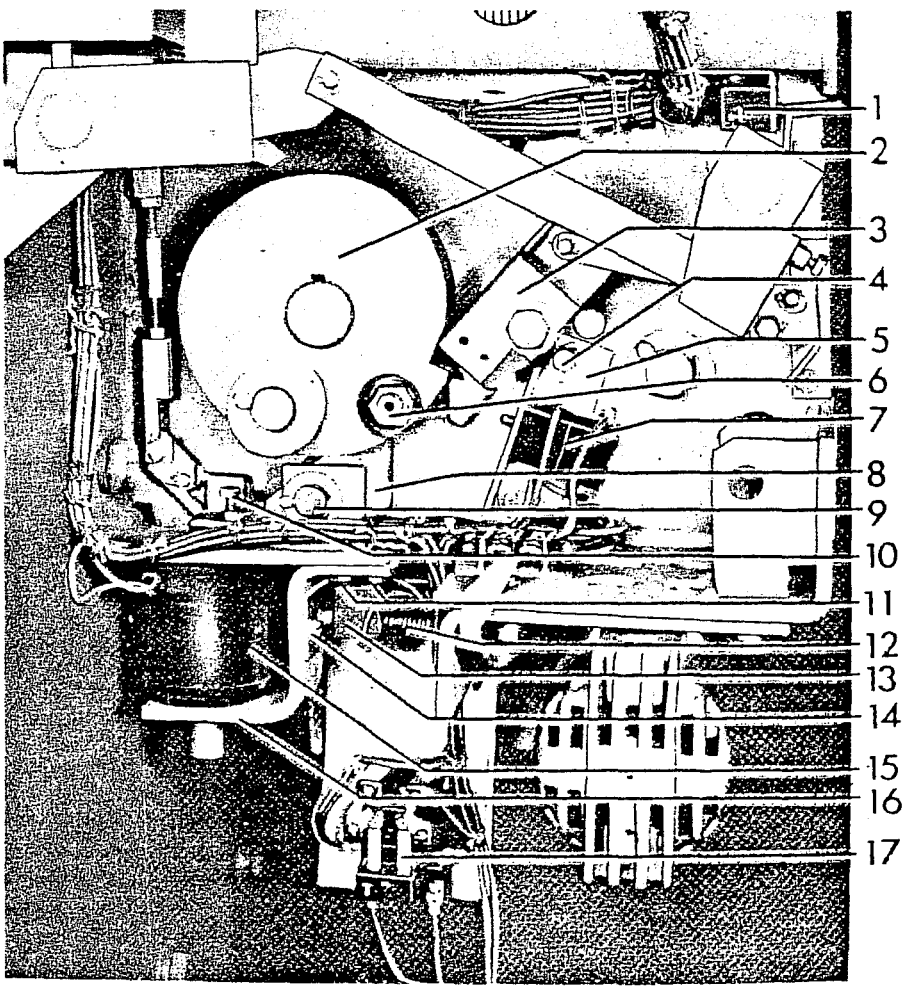

Figure 6. (8040933) Control Mechanism

1. Latch Checking Switch
2. Switch Cam
3. Switch Striker
4. Switch Support Bolts
5. Switch Support
6. Closing Latch Roller
7. Power Switches
8. Closing Latch
9. Closing Latch Shaft
10. Latch Adjusting Screw
11. Closing Coil Bolts
12. Closing Latch Spring
13. Latch Monitoring Switch
14. Switch Mounting Bracket
15. Closing Solenoid
16. Closing Coil Support
17. Control Relay

e contacts of the latch monitoring switch closes permit the spring charging motor to be energized d recharge the closing springs.

pening Operation

The breaker can be opened either electrically energizing the trip coil (3) Figure 5, or anually by pushing the trip lever (8). In each ethod the trip latch is rotated off the trip latch roller, permitting the operating mechanism linkage to collapse. The energy stored in the opening springs is released to provide the required opening speed for successful interruption of the circuit.

As the breaker opens to interrupt a current, the arc first starts at the arcing contacts (5 & 20) Figure 8, transfers to the arc runner (3 & 8) and energizes the blow-out coils (2 & 7). This action introduces a magnetic field between the pole pieces

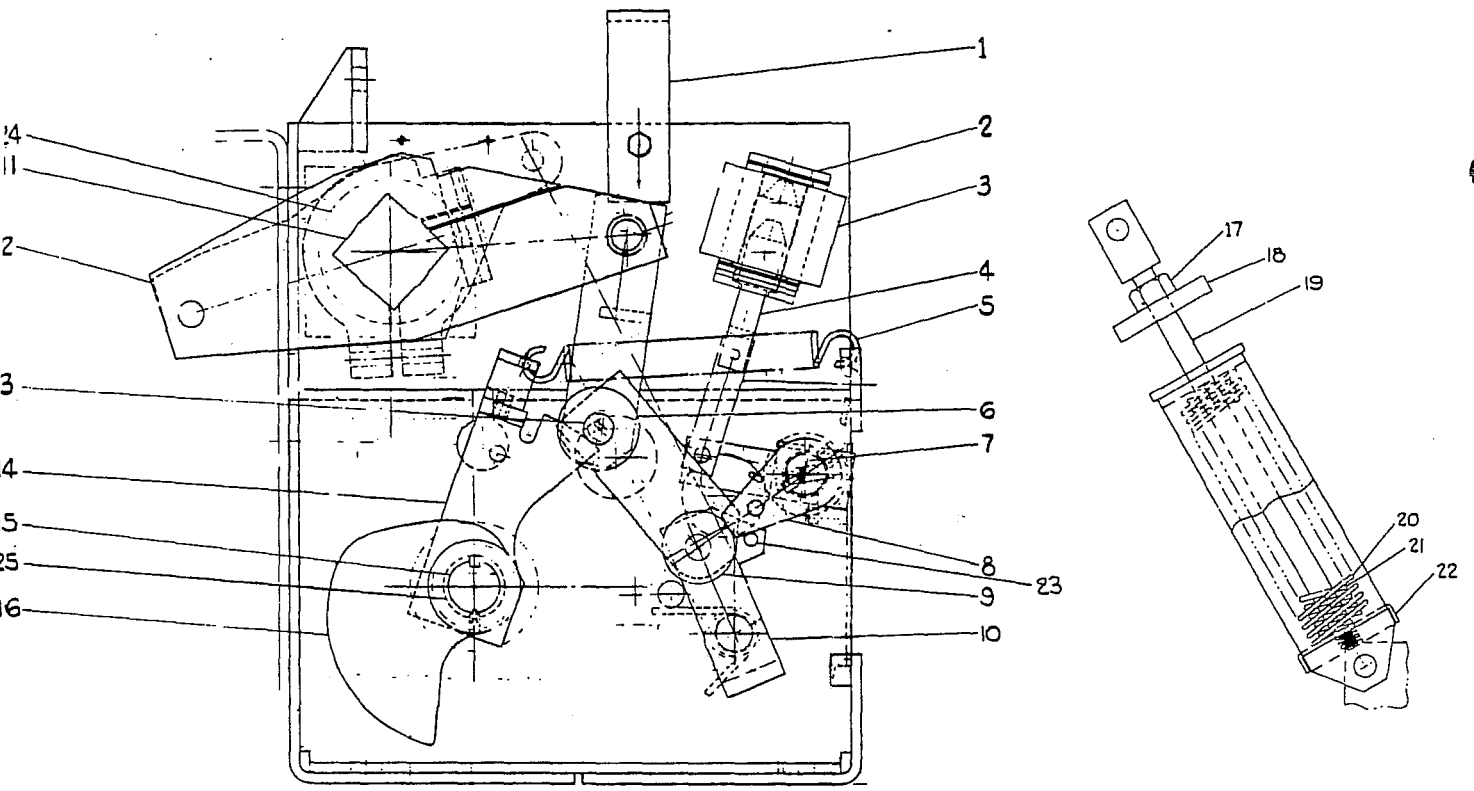

Figure 7. (0114C5320) Sectional Side View of Mechanism

1. Handle
2. Trip Coil Support
3. Trip Coil
4. Trip Armature
5. Prop Reset Spring
6. Cam Follower Roller
7. Trip Shaft
8. Trip Latch
9. Trip Latch Roller
10. Trip Latch Roller Support
11. Crank Shaft
12. Cranks
13. Prop Pin
14. Prop
15. Drive Shaft
16. Cam
17. Check Nut
18. Stop Plate
19. Spring Rod
20. Spring
21. Spring
22. Spring Guide
23. Stop Pin
24. Main Shaft Bearing
25. Cam Shaft Bearing

(4 & 9) of the interrupter that forces the arc deeper into the arc chute (6). At the time the arcing contacts part a discharge of air is expelled through the booster tube (21) across the arc. This air flow assists the arc transfer and interruption by blowing the arc away from the contacts and into the arc chute. As the magnetic field forces the arc deeper into the interrupter along the diverging arc runners, the field is progressively increased by the insertion of each additional blow-out coil into the circuit.

The arc chute has a series of interleaving ceramic fins, Figure 19. As the arc is forced into the interrupter it is lengthened in the gradually deepening serpentine path between the fins so that the electrical resistance of the arc is rapidly increased and its heat is absorbed by the ceramic material. The increased resistance reduces the magnitude and phase angle of the current and at an early current zero the arc cannot re-establish itself and interruption occurs.

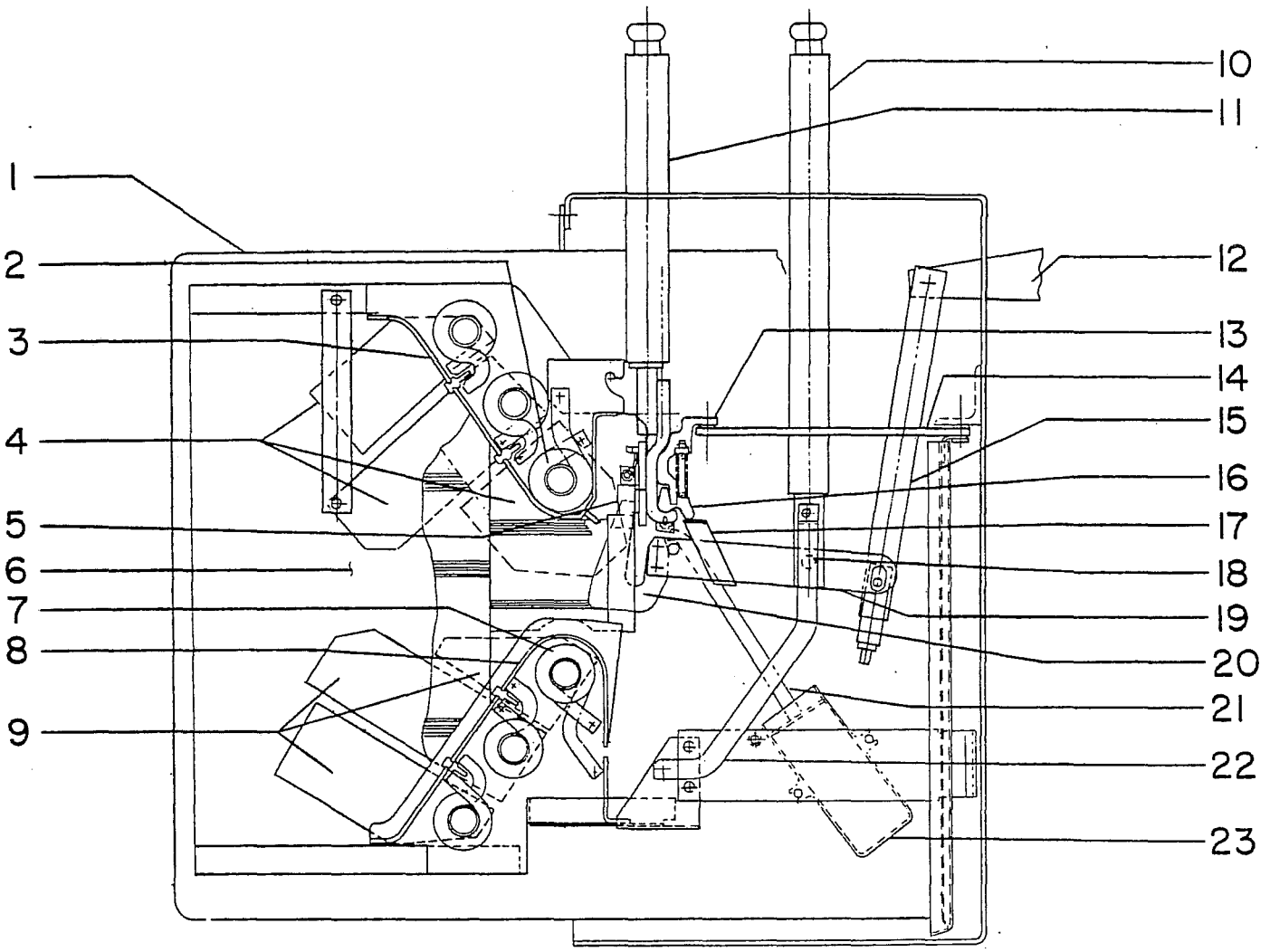

Figure 8. (0152C5915) Cross Section of Breaker Pole Unit

1. Box Barrier
2. Upper Blow-Out Coil
3. Upper Arc Runner
4. Upper Pole Pieces
5. Stationary Arcing Contact
6. Arc Chute Side
7. Lower Blow-Out Coil
8. Lower Arc Runner
9. Lower Pole Pieces
10. Front Bushing
11. Rear Bushing
12. Main Operating Crank
13. Spring Retainer
14. Horizontal Barrier
15. Operating Rod
16. Stationary Primary Contact
17. Movable Primary Contac
18. Hinge Cup Bearing
19. Contact Arm Assembly
20. Movable Arcing Contact
21. Booster Tube and Piston
22. Connection Bar
23. Booster Cylinder

rip Free Operation

If the trip coil circuit is energized while ıe breaker is closing, the trip armature will ırce the trip latch (8) Figure 7 away from the trip roller (9) causing the mechanism linkage to collapse and the breaker to re-open. The closing cam (16) will complete its closing stroke and the springs will re-charge as in a normal closing operation.

ADJUSTMENTS

All adjustments should be checked during eriodic inspections and whenever it becomes ecessary to repair or replace parts that have ecome worn or defective while in service. The ollowing adjustments are listed in the order in hich they are to be checked after removing the ox barriers and front cover from the breaker.

DO NOT WORK ON EITHER THE BREAKER)R MECHANISM UNLESS THE CLOSING SPRINGS .RE BLOCKED AND THE OPENING SPRINGS [AVE BEEN TRIPPED OPEN OR MECHANICALLY 3LOCKED. THIS MEASURE IS REQUIRED TO 'REVENT ACCIDENTAL CLOSING OR TRIPPING.

ırcing Contact Wipe

Refer to Figure 9. Close the breaker until he arcing contacts just touch. This can be letermined with the use of a circuit continuity ester such as a light indicator or bell set. In his position, the gap between the stationary)rimary contacts (1) and the movable primary :ontact (2) should be 5/16" or greater. This setting has been made in the factory and no adjustment is provided. A wipe of less than 5/16" is an indication that the arcing contacts need to be replaced. When making this check, see that there is clearance between the arcing contact (5) and the slot in the throat baffle (7) during entire stroke of the moving contact assembly.

Primary Contact Wipe

Refer to Figure 9, when the breaker is closed the stationary primary contacts (1) should rise from 1/4" to 5/16". Before checking this dimension be sure the mechanism is re-set so that the prop pin (13) Figure 7 is resting on the prop. To obtain the proper contact adjustment, open the breaker and, referring to Figure 10, loosen the check nut (4) and turn the adjusting nut (3). Screwing up on the adjusting nut will decrease the primary contact wipe, down will increase it. Tighten the check nut, close the breaker and recheck the wipe. With the primary contact wipe correctly adjusted, the clearance between the contact arm (6) Figure 9 and the buffer block (3) should be 1/16" or greater when the breaker is fully closed.

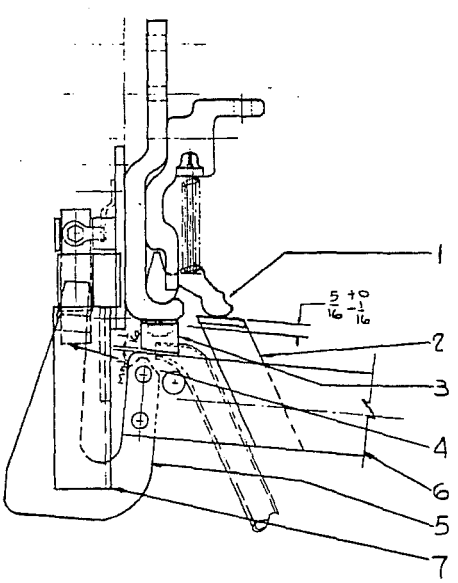

Primary Contact Wipe

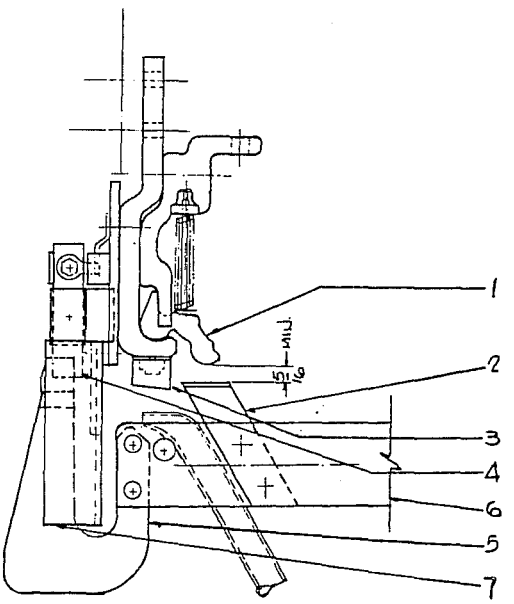

Arcing Contact Wipe

Figure 9. (0132C2709) Contact Adjustments

1. Stationary Primary Contacts
2. Movable Primary Contacts
3. Buffer Block
4. Stationary Arcing Contacts
5. Movable Arcing Contacts
6. Contact Arm
7. Throat Baffle

Primary Contact Gap

Refer to Figure 10. With the breaker closed, press the manual trip button allowing the breaker to trip open normally. Do not force the contacts open wider by hand. The gap between the stationary primary contacts (5) and the movable primary contact (8) measured between the closest points, should be 5-1/8" to 5-9/16". To change this gap, loosen the check nut (17) Figure 7, and turn the adjusting nut (18) on stud (19). Screwing the adjusting nut down will decrease the primary contact gap. Tighten the check nut and re-measure the contact gap (close and trip the breaker before checking the measurement).

WHEN WORKING ON THE MECHANISM IN THE CLOSED POSITION, KEEP FINGERS CLEAR OF THE LINKAGE, AS ACCIDENTAL TRIPPING CAN CAUSE SEVERE INJURY.

Trip Latch Wipe

Refer to Figure 7. The wipe of the trip latch (8) on the trip roller (9) should be from 3/16" to 1/4". This can be measured by putting a film of grease on the latch, closing the breaker part way, and tripping. The mechanism has the proper trip latch wipe when the latch rests against the stop pin (23). No adjustment is provided and a visual inspection is usually all that is required. If this setting is not correct, look for insufficient travel of the trip shaft (7).

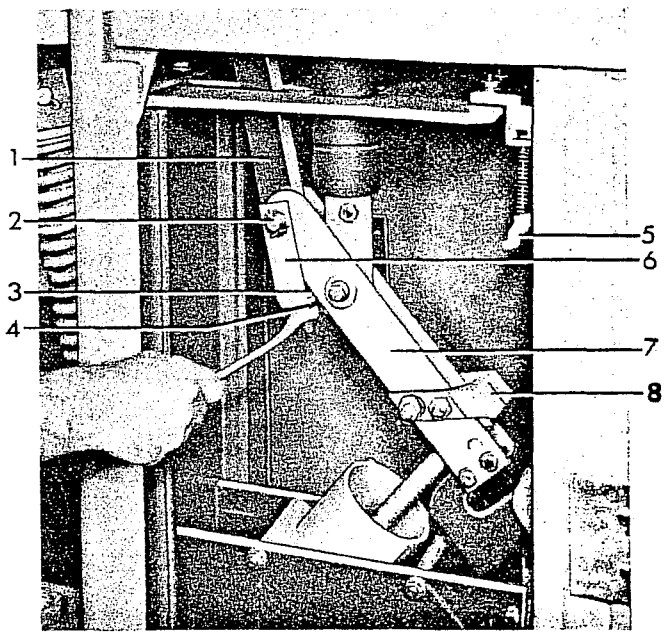

Figure 10. (8038802) Adjustable Coupling For Making Primary Contact Wipe Adjustments.

1. Operating Rod
2. Operating Rod Pin
3. Adjusting Nut
4. Check Nut
5. Stationary Primary Contacts
6. Yoke
7. Contact Arm
8. Movable Primary Contacts

Trip Armature Travel

Refer to Figure 7. The trip armature (4) should have 7/32" to 9/32" travel before the trip latch (8) starts to move. This can be adjusted by moving the trip coil support (2) and/or by adjusting the trip arm screw (10) Figure 11. A locking screw located behind the trip arm screw must first be loosened. Retighten locking screw after making adjustment.

Closing Latch Wipe

Refer to Figure 6. The wipe between the closing latch (8) and roller (6) should be 3/16" to 1/4". If re-setting is required, loosen, set, and retighten adjustment nut and screw (10).

Closing Latch Monitoring Switch

Refer to Figure 6. The closing latch must be fully re-set and the latch monitoring switch (13) operated before the motor will start. When the latch is fully reset the clearance between the switch striker arm and the switch mounting bracket (14) is 1/32" or less, this can be adjusted by bending the striker arm.

Motor and Relay Switches

Refer to Figure 6. With the closing springs blocked rotate the switch cam (2) until the switch striker (3) has traveled the maximum amount (about 180 degrees rotation of cam). At this point the clearance between the striker and the switch support (5) should be 1/32" or less. This can be adjusted by loosening the switch support mounting bolts (4) and rotating the support.

Interlock Switch Wipe

Refer to Figure 12. With the positive interlock in the reset, or normal position the clearance between the interlock switch arm (2)and the switch mounting plate (3) should be 1/32" or less. This can be adjusted by bending the switch arm.

Driving Pawl Adjustment

Refer to Figure 4. The driving pawl (8) must advance the ratchet wheel (6) sufficiently on each stroke to allow the latching pawls (2) to fall into the ratchet teeth. This should be checked with the closing spring load against the driving members. With the mechanism unblocked, hand charge the closing springs with the manual

iarging wrench until they are slightly more than ılf charged. Slowly rotate the charging wrench ıtil the driving pawl has traveled through its ɛturn stroke and check the maximum clearance ɛtween the pawl and the ratchet tooth. Rotate ıe charging wrench until the driving pawl has dvanced the ratchet tooth to its maximum travel. ow check the clearance between the ratchet tooth nd the latching pawl. The clearance should be pproximately equal for both the driving and ıtching pawls and not less than .015" in either ase.

If adjustment is required for either pawl the prings must first be fully charged and blocked. ıoosen seven motor support bolts (1) Figure 15, nd move entire motor assembly to the rear if ıe clearance is under the minimum at the latching awls, and to the front if the clearance is under he minimum at the driving pawl. Move the motor ssembly approximately twice the dimensional ncrease required at the pawl. Be certain the notor assembly is moved straight forward or ɛarward and tighten the one bolt on the right ıide of the mounting frame first to assure proper ılignment. After tightening the remaining bolts he springs should be released and the clearance ıgain checked as described above.

AUXILIARY DEVICES

Latch Checking Switch

Refer to Figure 13. Charge the closing springs sufficiently to reset the mechanism linkage. Rotate the trip latch (4) by pressing manual trip lever to open the latch checking switch (2). Allow the trip latch to reset slowly and determine the point at which the contacts are made by using a circuit continuity tester (light indicator, bell set, etc). The contacts of the latch checking switch should just make when the gap between the trip latch (4) and the stop pin (5) located on the latch roller link (7) is 1/16". There should be a minimum of 1/64" between the switch arm (3) and the switch support (1). To obtain adjustment of the latch checking switch, bend the latch checking switch arm (3).

Auxiliary Fuses

On breakers with "C" and "K" suffix, a set of protecting fuses is mounted on the front of the breaker. These fuses are the primary protective devices for the closing control circuit on those breakers that are used in metal-clad units designed for solenoid operated breakers.

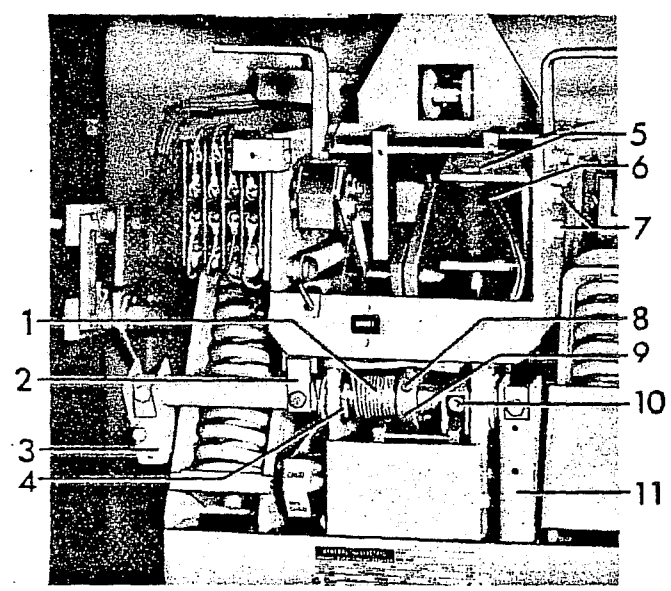

Figure 11. (8040934) Auxiliary Switch and Trip Coil

1. Trip Latch Spring
2. Switch Arm
3. Spring Discharge Crank
4. Cotter Pin
5. Trip Coil Support
6. Trip Coil
7. Mounting Bolts
8. Latch Set Screws
9. Trip Latch
10. Trip Arm Screw
11. Manual Trip Lever

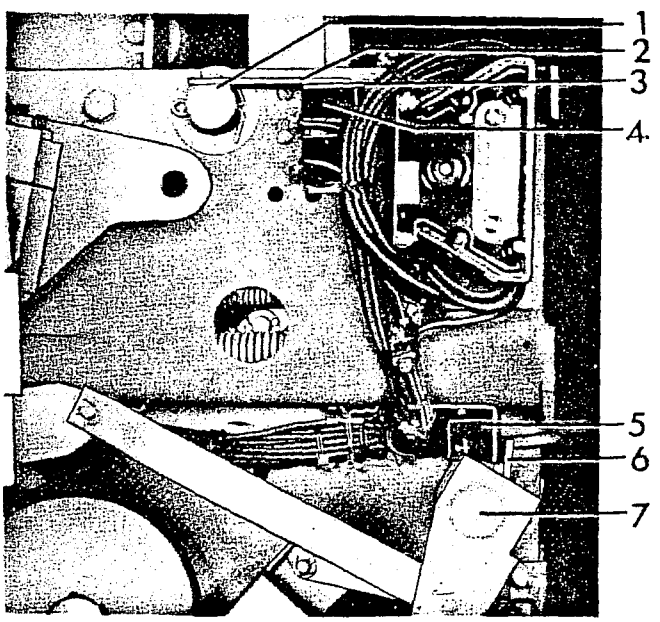

Figure 12. (8040933) Positive Interlock Switch

1. Positive Interlock Shaft
2. Switch Arm
3. Switch Support
4. Interlock Switch
5. Latch Checking Switch
6. Switch Arm
7. Trip Shaft

Inspection and Test

1. For ease in reviewing the adjustments, the following are recapitulated:

   a. Primary contact wipe: 1/4" to 5/16".

   b. Arcing contact wipe: 5/16" or greater gap at primary contacts.

   c. Primary contact gap: 5-1/8" to 5-9/16".

   d. Trip latch wipe: 3/16" to 1/4" with trip latch resting against stop pin.

   e. Trip armature travel 7/32" to 9/32".

   f. Closing latch wipe: 3/16" to 1/4".

   g. Closing latch monitoring switch: Maximum clearance 1/32".

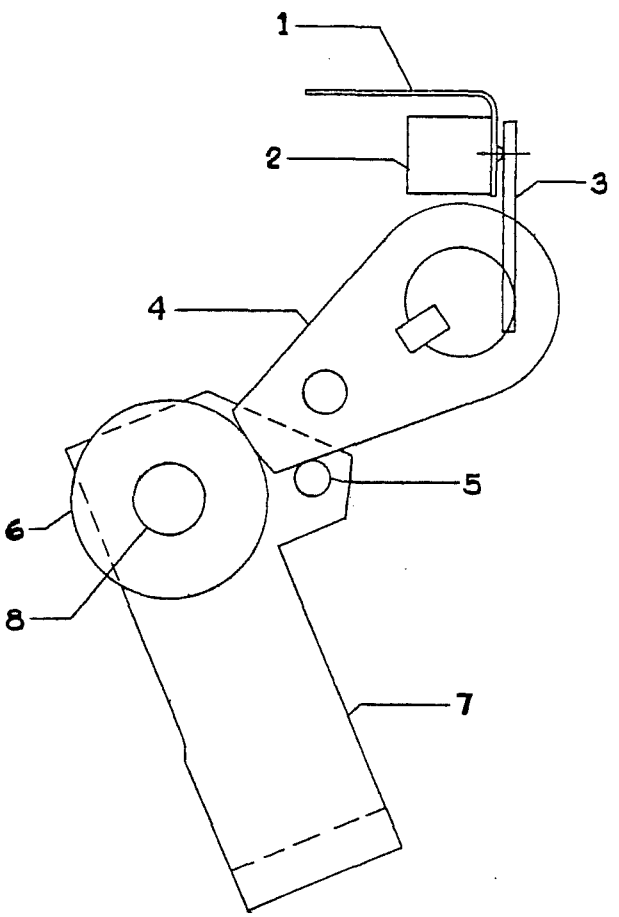

Figure 13. (0114C5320) Latch Checking Switch

1. Switch Support
2. Latch Checking Switch
3. Switch Arm
4. Trip Latch
5. Reset Pin Stop
6. Latch Roller
7. Latch Roller Link
8. Latch Roller Pin

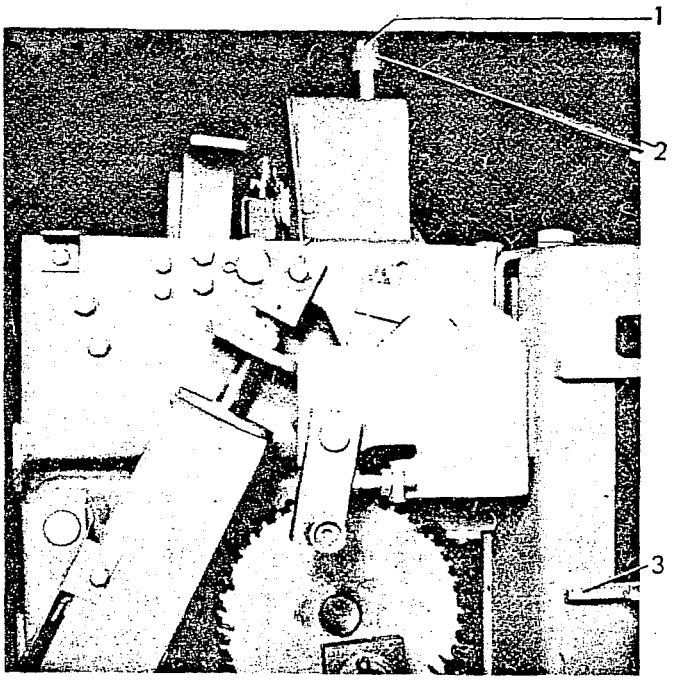

Figure 14. (8034464) Plunger Interlock

1. Plunger Bolt
2. Washer
3. Breaker Lifting Rail

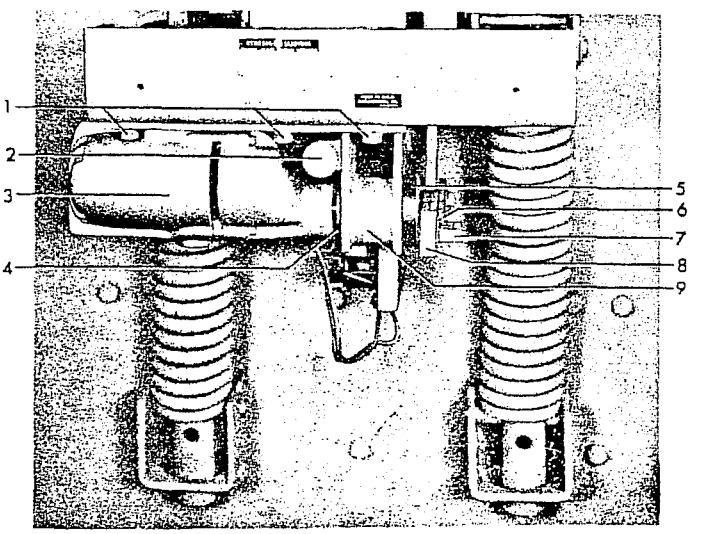

Figure 15. (8040931) Driving Elements

1. Mounting Bolts
2. Manual Close Button
3. Motor
4. Retaining Ring
5. Eccentric
6. Retaining Ring
7. Hex Charging Stud
8. Driving Link
9. Motor Support

h. Motor and relay switch: maximum clearance 1/32".

i. Interlock switch: maximum clearance 1/32".

j. Driving and Latching Pawl: minimum clearance to ratchet teeth .015".

k. Latch checking switch contacts make when the gap between the trip latch and the stop pin is 1/16".

2. Check all nuts, washers, bolts, cotter pins, and terminal connections for tightness.

3. Inspect all wiring to make sure that no damage has resulted during installation, and test for possible grounds or short circuits.

4. See that all bearing surfaces of the mechanism have been lubricated. Refer to the section on LUBRICATION. (Page 16 and Figure 17).

5. Operate the breaker slowly with the manual charging wrench and note that there is no excessive binding or friction and that the breaker can be moved to the fully opened and fully closed positions.

6. See that any place where the surface of the paint has been damaged is repainted immediately.

7. Check the trip coil plunger and the closing coil plunger to see that they move freely.

Opening and Closing Speeds

The closing speed of the arcing contact of the breaker should be a minimum of 11 feet per second. This represents the average speed of the movable arcing contact from a point 3" before the tip is tangent to the lower surface of the probes on the upper arc runner to the tangent position.

The opening speed of the arcing contact should be a minimum of 15 feet per second. This represents the average speed over 3" from the point when the tip on the movable arcing contact is tangent to the lower surface of the probes on the upper runner. Proper servicing and lubrication of the breaker and its operating mechanism should maintain these speeds and no adjustment is provided.

Control Power Check

After the breaker has been operated several times with the manual charging wrench and the mechanism adjustments are checked as described, the operating voltages should be checked at the closing coil, trip coil, and motor terminals. Control Power for electrical operation of the breaker may be from either an alternating or direct current source. The operating ranges for the closing and tripping voltages as given on the breaker nameplate, are as follows:

Nominal Voltage	Closing Range	Tripping Range
24v d-c	- -	14 - 30v d-c
48v d-c	34 - 50v d-c	28 - 60v d-c
110v d-c	80 - 115v d-c	60 - 125v d-c
125v d-c	90 - 130v d-c	70 - 140v d-c
220v d-c	160 - 230v d-c	120 - 250v d-c
250v d-c	180 - 260v d-c	140 - 280v d-c
115v a-c	95 - 125v a-c	95 - 125v a-c
230v a-c	190 - 250v a-c	190 - 250v a-c

If the closed circuit voltage at the terminals of the coil or motor does not fall in the specified range, check the voltage at the source of power and line drop between the power source and breaker.

When two or more breakers operating from the same control power source are required to close simultaneously, the closed circuit voltage at the closing coil or motor of each breaker must fall within the specified limits.

Electrical closing or opening is accomplished by energizing the closing or trip coil circuit. Control switches are provided for this purpose on the metal-clad unit. It is also possible to trip or close the breaker manually by pressing the manual trip lever (8) Figure 5 or the manual close button (9).

GENERAL MAINTENANCE

GENERAL

Safe and dependable service from electrical apparatus and power systems is contingent upon reliable performance of power circuit breakers. To obtain maximum reliability the breaker should be inspected and maintained on a regular schedule. The breakers are designed in accordance with applicable standards which require that they be capable of performing up to 5000 operations for 1200 ampere breakers and 3000 operations for 2000 ampere breakers switching rated continuous current before any replacement of parts should be necessary. This requirement is based on the breakers being serviced, or maintained, at least every 2000 operations, or once per year, whichever comes first. If the breaker is also required to interrupt fault currents during this period of time additional maintenance and replacement of parts may be necessary.

BEFORE ANY MAINTENANCE WORK IS PERFORMED, MAKE CERTAIN THAL ALL CONTROL CIRCUITS ARE DE-ENERGIZED AND THAT THE

BREAKER IS REMOVED FROM THE METAL-CLAD UNIT. DO NOT WORK ON THE BREAKER OR MECHANISM WHILE IN THE CLOSED POSITION UNLESS THE PROP AND TRIP LATCH HAVE BEEN SECURELY WIRED OR BLOCKED TO PREVENT ACCIDENTAL TRIPPING. DO NOT WORK ON THE BREAKER OR MECHANISM WHILE THE SPRINGS ARE CHARGED UNLESS THEY ARE SECURED IN THAT POSITION BY THE MAINTENANCE SPRING BLOCKING DEVICE.

PERIODIC INSPECTION

The frequency of the inspection and maintenance operations required should be determined by each operating company and will depend on the application of the breakers and the operating conditions. Factors which should be considered are: Importance of the breaker to overall plant or system operation; number of operations and magnitude of currents switched by breaker; frequency of fault interruptions; and the atmospheric conditions in which the breaker normally operates. Extreme conditions of dust, moisture, corrosive gases etc., can indicate that inspection and maintenance will be required more frequently than every 2000 operations. Very clean dry operating conditions with low current switching duty can justify a longer period of time between inspections. Any time a breaker is known to have interrupted a fault at or near its rating it is recommended that the breaker be inspected and necessary maintenance be performed as soon after the interruption as is practical. It is also recommended that an initial inspection be made of new breakers after the first 500 operations or six months after being put in service, whichever comes first.

The following instructions give the items that should be included in an inspection and general recommendations on the maintenance of breakers.

Interrupters

Since there are no moving parts, the interrupters of a magneblast breaker will normally require little or no inspection unless there is evidence of damage to the arc chutes sides or contamination in the throat area. If either of these conditions are present the interrupters should be removed from the breaker and the following points noted:

1. The throat area of the interrupter should be cleaned with sandpaper (Do Not Use emery cloth or other metallic abrasives). All flat areas on either side of the movable arcing contact travel should be sanded. Do not sand or otherwise attempt to clean the ceramic fins of the arc chute sides or throat pieces. Heavily contaminated parts should be replaced.

2. Cracks which have formed in the fins of the arc chute are to be expected in ceramic materials of this type when subjected to the severe heat of an arc. These cracks do not interfere with the operation of the device in any way and should be disregarded.

3. If the arc chute has suffered any mechanical injury due to dropping or accidental striking, resulting in the actual breaking off of fins, replacement will be necessary. Small broken corners on the exhaust end of the arc chute sides will not interfere with its performance and can be disregarded.

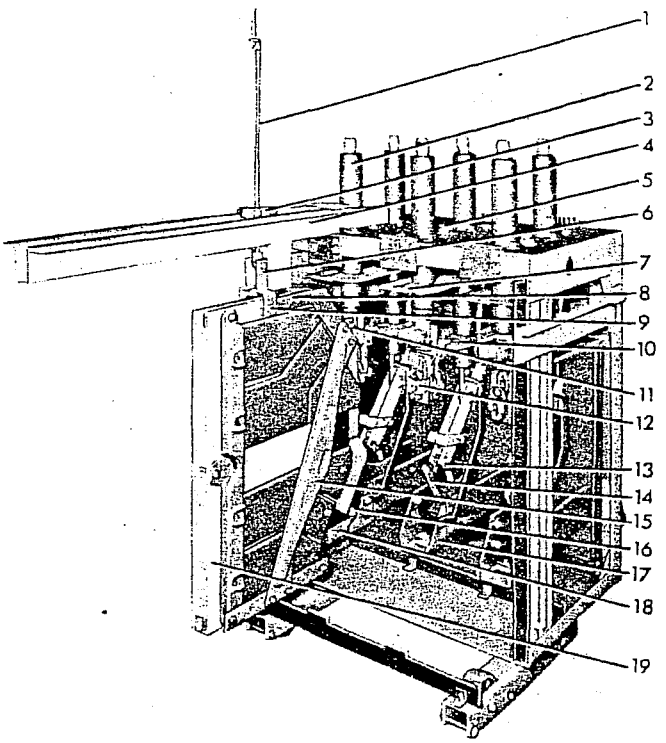

Figure 16. (8034809) Interrupter Partially Removed Showing Accessibility of Arcing Contacts.

1. Handle
2. Rear Bushing
3. Trolley
4. Arc Chute Lifter
5. Arc Chute Lifter Bolt
6. Grappling Hooks
7. (Not used in this model)
8. Upper Interrupter Support
9. Lifting Bolt
10. Lower Horizontal Barriers
11. Supporting Bolt
12. Stationary Arcing Contacts
13. Mounting Bolts
14. Movable Arcing Contacts
15. Arc Chute Brace
16. Lower Supporting Bolt
17. Support Bracket
18. Lower Interrupter Support
19. Interrupter

4. The plastisol flexible covering for the pole pieces (3 & 8) Figure 18 and the upper mounting support (12) should be inspected for breaks in the insulation. If there are holes or breaks in the insulation they should be repaired or the part replaced.

rupter Removal And Replacement

Refer to Figure 16. An arc chute lifter is ially furnished with the metal-clad switchgear se in removing and replacing the interrupters e AM-13.8-500 breakers. When the lifter is available an overhead crane or portable hoist be used. The arc chute lifter is assembled ne top plate of the breaker as shown in the rence figure using the bolt (5) located between front and rear bushings. Before assembling ifter on the breaker it is necessary to remove box barrier.

Lower the grappling hooks (6) by turning handle (1) until they can be placed over the ng bolts (9) on the interrupter. Turn the ile to raise the hooks until they begin to the interrupter.

To remove the interrupter, loosen the two er supporting bolts (11) and the one lower port bolt (16) using a standard 3/4" wrench. se the assembly approximately 3/8" and continue raise the interrupter and gently move it from to side until both upper and lower supports disconnected. Move the trolley (3) of the chute lifter towards the rear of the breaker lower the interrupter to a resting position the floor. Support the interrupter from falling r and remove the grappling hooks.

To reassemble the interrupter to the breaker, t the lower interrupter support (18) on the port bracket (17). Slide the arc chute forward, ing it slightly to engage the supporting bolts (11) the slots of the upper interrupter support. eck to assure that the upper insulation (16) Figure is properly positioned within the throat barrier Figure 23.

Tighten the supporting bolts (11) and (16) ure 16. These bolts serve as both the elec- al and mechanical connections between the hings and the arc runners within the interrupter. eck that the movable arcing contact (14) passes ween the probes on the upper arc runner(4) ure 20 without touching.

eaker Contacts

By removing the box barrier the movable and tionary primary contacts and the movable arc- contacts can be inspected. The stationary ing contacts can be inspected only after re- ving the interrupter. If the contacts are burned pitted, they can be made smooth with a fine file.

After completing inspection of the contacts, ck the contact adjustments as specified under ADJUSTMENTS.

Mechanism

A careful inspection should be made to check for loose nuts, bolts, and loose or damaged set screws or other locking devices. All cam, roller, and latch surfaces snould be inspected for any evidence of damage or excessive wear. Lubricate the mechanism as outlined below, then, using the manual charging wrench, open and close the breaker several times to make certain that the mechanism operates freely throughout its entire stroke. Check the mechanism adjustments as specified under ADJUSTMENTS. Check the control wiring for tightness of connections and damaged insulation.

Bushings and Insulation

The surface of the bushings should be kept clean and unmarred to prevent moisture absorption. If the insulation surface should become damaged, it should be sanded and cleaned, and should be refinished with either clear varnish or clear resin. Allow to dry smooth and hard.

All other insulation parts on the breaker should be kept clean and dry. Smoke or dust collected between inspection periods should be wiped off, and if dampness is apparent, heaters should be installed in the metal-clad switchgear to insure dryness.

Insulation Test

When insulation has been repaired or replaced, or when breaker has been operating in adverse moisture conditions, it is recommended that the insulation be checked before the breaker is placed back in service. A standard 60 hertz high potential test at 27,000 volts RMS for one minute will normally indicate whether the breaker is satisfactory for service. With the breaker contacts in the fully opened position, apply the test potential to each terminal of the breaker individually with all other terminals and the breaker frame grounded. After high potential tests are made on organic insulating materials, these materials should be inspected for visible leakage current paths, and necessary action must be taken to repair or replace insulation that may have been affected by moisture absorption.

If the breaker secondary wiring is to be given a hi-potential test at 1500 volts, remove both of the motor leads from the terminal board. Failure to disconnect the motor from the circuit may cause damage to the winding insulation.

Lubrication

In order to maintain reliable operation, it is important that all circuit breakers be properly lubricated at all times. Some of the bearings and rolling surfaces utilize a new type of dry lubrication that will require no maintenance and

will last the life of the equipment. The remaining bearings and surfaces require lubrication as listed in the lubrication chart, Figure 17. These have been properly lubricated during assembly at the factory, using the finest grades of lubricants available. However, even the finest oils and greases have a tendency to oxidize with age, as evidence by hardening and darkening in color. Elimination of the hardened lubricant is essential for the proper operation of circuit breakers. Also frequent operation of the breaker causes the lubricant to be forced out from between the bearing surfaces. A simple lubrication will often clear up minor disturbances which might be mistaken for more serious trouble.

A definite lubrication schedule should be set up taking into consideration the frequency of operation of the breaker and local conditions.

It is recommended that lubrication of the breaker and its operating mechanism be a part of the periodic inspection and maintenance program, with not more than a two year period between lubrications. It is also recommended that all circuit breakers be operated at regular intervals, at least once a year, to insure the lubrication is in good condition and the breaker is operable.

The lubrication chart, Figure 17, is divided into two methods of lubrication. The first method outlines the maintenance lubrication which should be performed at the time of periodic maintenance, and requires no disassembly. The second method outlines a lubrication procedure similar to that performed on the breaker at the factory, and should be used when a general overhaul of the breaker is necessary.

General Electric Lubricants D50H15 and D50H47 are available in 1/4 lb. collapsible tubes. It is so packaged to insure cleanliness and to prevent oxidation.

METHOD OF CLEANING BEARINGS

Whenever cleaning of bearings is required, as indicated in the lubrication chart, the following procedures are recommended.

PARTS	LUBRICATION AT MAINTENANCE PERIOD	ALTERNATE LUBRICATION (REQUIRES DISASSEMBLY)
Prop & Trip Shaft Bearings (Teflon coated bearings)	No lubrication required	No lubrication required
Sleeve Bearings - main crank shaft, mechanism pawls, spring charging and operating linkages, etc. (Bronze)	Light application of machine oil SAE 20 or SAE 30.	Remove bearings or links, clean per instructions and apply D50H15 lubricant liberally.
Contact Arm Hinge Assembly Cup Bearing Loose rings between bushing and contact arm	No lubrication required	Wipe clean and apply D50H47.
Roller and Needle Bearings	Light application of machine oil SAE 20 or SAE 30.	Clean per instructions and repack with D50H15 lubricant.
Ground surfaces such as cams, ratchet teeth, etc. (Surfaces coated with MoS_2)	No lubrication required	No lubrication required
Ground surfaces such as latches, rollers, prop, etc.	Wipe clean and apply D50H15 lubricant	Wipe clean and apply D50H15 lubricant.
Silver plated contacts and primary disconnect studs	Wipe clean and apply D50H47 lubricant	Wipe clean and apply D50H47 lubricant.
Booster Cylinder	Do not lubricate	Do not lubricate
Arcing Contacts	Do not lubricate	Do not lubricate

Figure 17 Lubrication Chart

eve Bearings

The sleeve bearings used in the prop (14) gure 7 and the bearings for the trip shaft (7) lize Teflon surfaces and do not require lu- ication. After a number of operations, the rface will acquire a thin black film. Do not move this film unless there is evidence of t-side contaminates, such as dry or hardened ease. If contaminants are present they should removed by immersing the prop and bearing clean petroleum solvent, or similar cleaner, d using a stiff brush. Do not remove the bearings om the prop or frame. DO NOT USE CARBON ETRACHLORIDE.

The remaining sleeve bearings located in the iving element and the mechanism linkage and ame should be cleaned and relubricated with -E D50H15 lubricant at general overhaul periods. iis includes the bearings in the driving link (8) gure 15, driving pawl lever (10) Figure 4, iving pawl (8), latching pawls (2), trip latch ller support (10) Figure 7, cranks (12), and the arings in the mechanism frame and intercon- cting links. Bearings that are pressed into the ame or other mechanism members should not removed.

The hinge of the primary contact arm (19) igure 8, should be disassembled, cleaned, and bricated with G-E D50H47 lubricant at general erhaul periods.

The main shaft bearings (24) Figure 7 should e removed, cleaned, and lubricated with G-E 50H15 lubricant at general overhaul periods.

oller and Needle Bearings

Refer to Figure 7. Bearings in the cam llower (6), latch roller (9), and cam shaft bearings 5) should be removed from the mechanism and e inner race disassembled. They should then be aced in a container of clean petroleum solvent r similar cleaner. DO NOT USE CARBON ETROCHLORIDE. If the grease in the bearings as become badly oxidized, it may be necessary use alcohol (type used for thinning shellac) remove it. Ordinarily, by agitating the bearings the cleaning solution, and using a stiff brush remove the solid particles, the bearings can e satisfactorily cleaned. Do not handle the earings with bare hands as deposits from the in onto the bearings are inductive to corrosion. the bearings are touched, the contamination n be removed by washing in alcohol. After the earings have been thoroughly cleaned, spin them clean new light machine oil until the cleaner r solvent is entirely removed. Allow this oil drain off and then repack them immediately ith G-E lubricant D50H15 being sure all metal arts are greased. The inner races should be ssembled.

NOTE: If it becomes necessary to clean e bearings in alcohol (shellac thinner), be sure the alcohol is perfectly clean, and do not allow the bearings to remain in the alcohol more than a few hours. If it is desirable to leave the bearings in the alcohol for a longer time, an inhibited alcohol such as is used for anti-freeze should be used. Even then the bearings should be removed from the alcohol within twenty-four hours. Precautions against the toxic effects of the alcohol must be exercised by wearing rubber gloves and by using the alcohol in a well ventilated room; excessive exposure to the fumes is sometimes unpleasant to personnel. Washing the bearings in the light oil, draining and repacking with lubricant D50H15 should follow immediately.

Bearings that are pressed in to the frame or other members such as the motor support (9) Figure 15, should not be removed. After removing the shaft and inner race the bearing can be cleaned satisfactorily with petroleum solvent or a similar cleaner and a stiff brush. Follow the procedure outlined above using a light machine oil and G-E lubricant D50H15 before reassembling the inner race and shaft.

Rolling Surfaces

A number of rolling and rubbing surfaces in the mechanism have been lubricated with a baked-on dry, molybdenum disulfide coating. This lubrication, which can be recognized by its dark, almost black color (e.g. Face of switch cam (5) Figure 2) requires no maintenance and should last the life of the breaker.

Other rolling or rubbing surfaces that are not lubricated with molybdenum disulfide should have the dried, dirty grease removed and a thin film of fresh lubricant D50H15 applied.

MAINTENANCE

Magne-Blast breakers used for switching arc furnaces or capacitors will require more frequent and more detailed inspection and maintenance because of the repetitive nature of the applications. The following schedule is recommended for such breakers:

A. Every 500 Operations:

1. Remove the box barriers.

2. Wipe all insulating parts clean of smoke deposit and dust with a clean dry cloth, including the bushings, and the inside of the box barriers.

3. All flat parts in the throat area of the interrupters should be thoroughly cleaned by using sandpaper. This cleaning should be performed any time the interrupter is removed. The arc chute sides and throat cooler fins should not be cleaned. Whenever the interrupter is removed, loose dust and dirt should be blown out before re-

placing arc chutes. Throat coolers which are heavily contaminated should be replaced.

4. Check the breaker and mechanism adjustments as summarized under INSPECTION AND TEST. The necessary readjustments should be made as described under ADJUSTMENTS.

B. Every 2000 Operations, or Every Six Months Whichever Comes First:

1. In addition to the servicing done each 500 operations, the following inspection should be made and work done when required.

2. Primary Contacts (3 and 10 Figure 23). Inspect the condition of the stationary contact fingers and movable contact blocks. Badly pitted or burned contacts should be replaced. (Note: Burned primary contacts indicate the probable need for arcing contact replacement.) If the contact surfaces are only roughened or galled, they should be smoothed with crocus cloth or draw filed. After contact dressing the primary contacts should be greased lightly with D50H47.

3. Arcing Contacts (5 and 20 Figure 8). When the arcing contact wipe is less than the minimum specified under ADJUSTMENTS, the contacts should be replaced. The contacts should be inspected for uneven wear and/or damage using a mirror to inspect the stationary contacts. Normally it will not be necessary to remove the interrupters for this 2000 operation servicing unless inadequate wipe or contact condition indicate a need for replacement. If the interrupters are removed, the contact braids, and other parts subject to arcing should be checked for possible cleaning or replacement. Do not grease the arcing contacts under any circumstances.

4. The breaker and operating mechanism should be carefully inspected for loose nuts, bolts, and loose or damaged set screws or other locking devices. All cam, latch and roller surfaces should be inspected for damage or excessive wear. The buffer blocks and their retainers on the bottom of the stationary contact support should be inspected for possible need of replacement.

5. The contacts of the control relay (17) Figure 6, should be inspected for wear and cleaned if necessary.

6. Lubricate the breaker operating mechanism in accordance with instructions under LUBRICATION, page 16 and the lubrication chart Figure 17.

7. Inspect all wiring for tightness of connections and possible damage of insulation.

8. After the breaker has been serviced, it should be operated manually to be sure there is no binding or friction and that the breaker contacts can move to the fully opened and fully closed positions. Its electrical operation should then be checked using either the test cabinet or the test couplers.

C. After Every 10,000 Operations:

1. In addition to the servicing done each 2000 operations, the interrupters should be removed from the breaker and disassembled to permit a detailed inspection of insulation, blow-out coils, arc runners and assemblies which can become contaminated by arc products.

2. The blow-out coils should be carefully examined and if the insulation has been cracked, shrunk or eroded from arc action and heat so that the turns of the coils are not fully insulated from each other, the coils should be replaced. All connections should be checked for tightness.

3. The arc runners should be inspected and replaced when the arc resistant coating on the runner surface has been penetrated as a result of arc erosion.

4. Check the stationary arc contacts to assure that the arcing contacts are in good condition and that their connections are tight.

5. Insulating material that is carbonized and cannot be satisfactorily cleaned should be replaced.

6. Any parts damaged or severely burned and/or eroded from arc action should be replaced.

NOTE: Fine cracks may develop in the fins of the arc chute sides. This is to be expected with ceramic materials when subjected to the high heat of an arc and may be disregarded unless they are long and present a possibility of fin sections breaking completely off. Small broken corners on the exhaust end of the arc chute will not interfere with its performance

and can also be disregarded.

7. The cup bearing and the contact ring at the hinge point of the contact blade should be disassembled, inspected, cleaned, and relubricated with G-E contact lubricant D50H47. The contact ring should be inspected for wear and replaced when reduced in thickness to less than 1/32". When reassembling the cup bearing, be sure the cotter pin is properly assembled in the castle nut on the hinge pin (7) Figure 23. This assures proper contact pressure at the hinge.

D. Every 20,000 Operations or Approximately Every Five Years - Whichever Comes First:

1. The breaker should be given a general inspection and overhaul as required. All excessively worn parts in both the mechanism and breaker should be replaced. Such wear will usually be indicated when the breaker cannot be adjusted to indicated tolerances. This overhaul and inspection is more detailed and will require disassembly of mechanism and breaker operating parts.

2. All roller and needle bearings in the operating mechanism should be disassembled, cleaned, and repacked with G-E lubricant D50H15 as described under LUBRICATION.

3. The stationary primary contact fingers (3) Figure 23, should be disassembled and the silver-plated pivot area of the contact and contact support cleaned and lubricated with G-E lubricant D50H47.

4. The breaker and operating mechanism should be serviced as described for every 2,000 operations and properly adjusted before being put back into service.

REPAIR AND REPLACEMENT

This section covers the proper method of removing and replacing those parts of the breaker subject to damage and wear that may require repair or replacement at the installation. IMPORTANT: UPON COMPLETION OF ANY REPAIR WORK, ALL BREAKER AND MECHANISM ADJUSTMENTS MUST BE CHECKED. Refer to the section on INSTALLATION, paying particular attention to ADJUSTMENTS and FINAL INSPECTION.

ARC CHUTE (To inspect or replace blow-out coils and arc runners):

With the breaker open and the closing springs in the blocked position, remove the box barriers (1) Figure 8. The arc chute lifter can now be assembled to the breaker and the interrupter removed as described under INTERRUPTER REMOVAL AND REPLACEMENT page 16.

To disassemble the arc chute after it has been removed from the breaker, proceed as follows:

NOTE: When disassembling the arc chute and its components some small washers, spacers, etc., will be found that cannot be identified in these instructions. Care should be taken to collect and identify these items so they can be reassembled correctly.

1. Remove the assembly bolts (2, 6, 9, 11, 15, 17 and 19), Figure 18.

2. Remove the side brace (7) and upper brace (5), the upper pole pieces (3), the lower pole pieces (8).

3. To remove the upper supports (12), and upper interrupter support (14) remove the assembly bolts (1 and 13), and the bolted connection between the upper interrupter support and the blow-out coil.

4. Remove the assembly bolt (22) to remove the lower brace (10).

5. Remove the lower interrupter support (20) by removing the assembly bolts (21) Figure 18 and the connection nut (8) Figure 20.

6. At this point, the side shields (5) Figure 20 and the upper arc runner assembly (2) can be removed. The throat coolers (7) Figure 19 are permanently affixed to the side shields.

7. Further disassembly of both the upper and lower arc runner assemblies can be done by removing the various screws and assembly bolts (not illustrated) as shown in Figure 19.

8. The arc chute sides (6) Figure 19, can also be separated for inspection.

Reassemble the interrupter in the reverse order. The following items should be noted during reassembly:

1. The fins of the arc chute sides should be equally spaced and aligned before bolting together. The front edge (along the runner) of the two arc chute sides should be parallel and in line.

2. The gap between the fins at the rear of the arc chute sides measured at least 1" in from the back end of the arc chute (See Figure 21) should be 1/16" maximum.

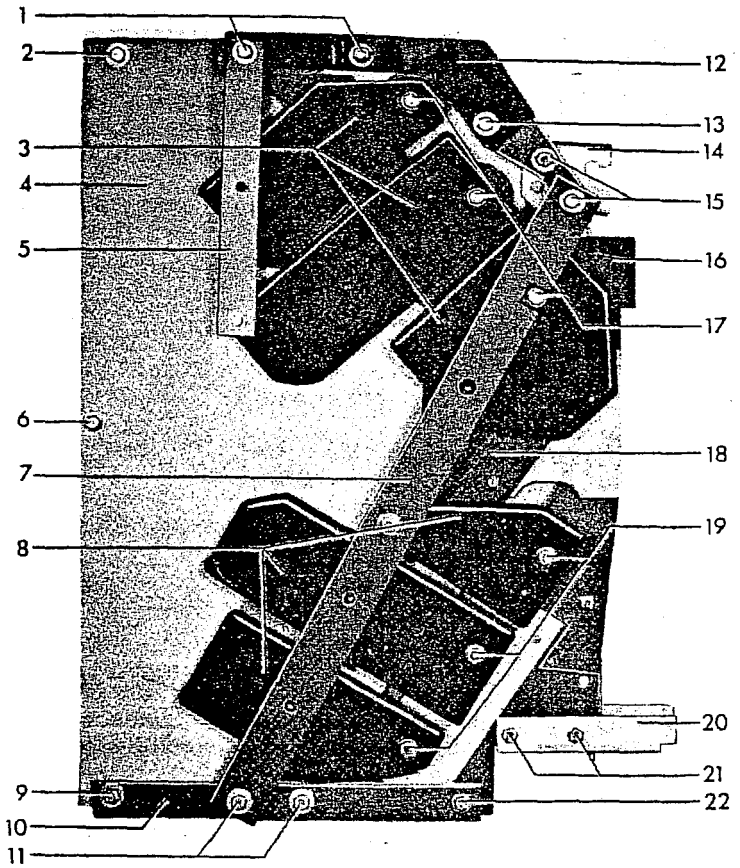

1. Assembly Bolts
2. Assembly Bolt
3. Upper Pole Pieces
4. Arc Chute Side
5. Upper Brace
6. Assembly Bolt
7. Side Brace
8. Lower Pole Pieces
9. Assembly Bolt
10. Lower Brace
11. Assembly Bolts
12. Upper Support
13. Assembly Bolt
14. Upper Interrupter Support
15. Assembly Bolts
16. Upper Insulation
17. Assembly Bolts
18. Side Shield
19. Assembly Bolts
20. Lower Interrupter Support
21. Assembly Bolts
22. Assembly Bolt

Figure 18. (8041414) Interrupter Assembly

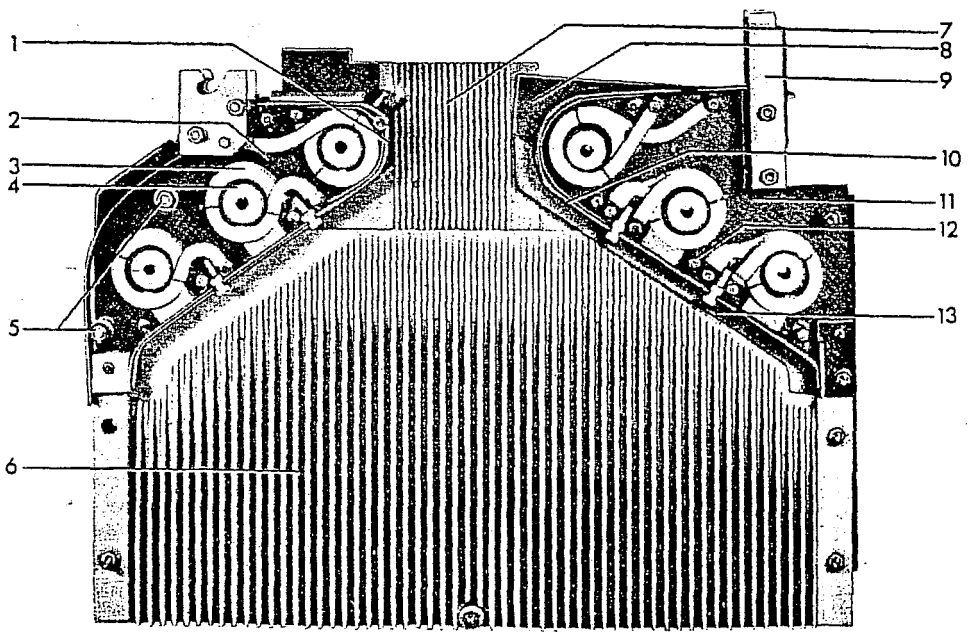

Figure 19. (8041415) Interrupter Assembly With Side Removed

1. Upper Arc Runner
2. Upper Arc Runner Assembly
3. Blow-out Coil
4. Blow-out Core
5. Upper Arc Runner Spacers
6. Arc Chute Side
7. Throat Cooler Assembly
8. Lower Runner Barrier
9. Lower Coil Connection
10. Lower Arc Runner
11. Lower Arc Runner Assembly
12. Lower Arc Runner Spacers
13. Lower Runner Shield

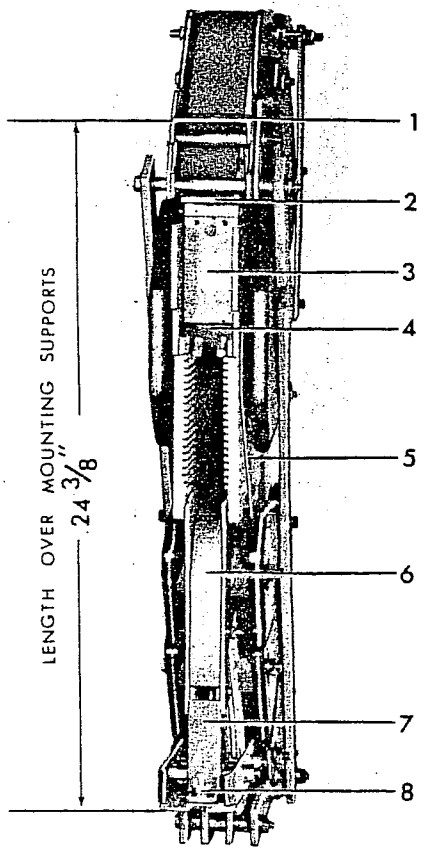

Figure 20. (8041413) Interrupter Assembly

1. Upper Support
2. Upper Arc Runner Assembly
3. Insulation
4. Upper Arc Runner
5. Side Shield
6. Lower Arc Runner Assembly
7. Lower Coil Connection
8. Connection Nut

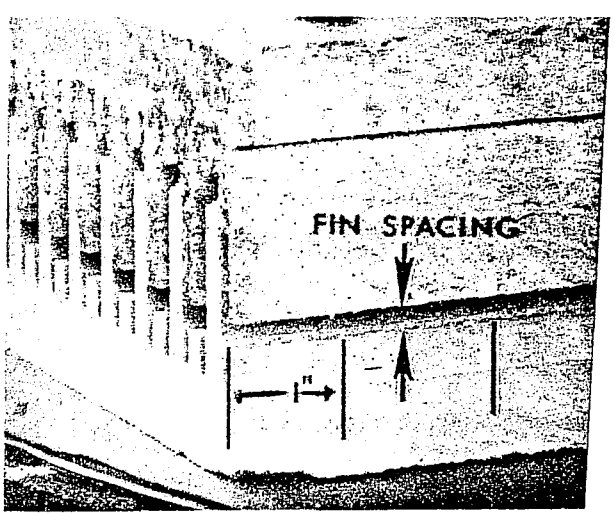

Figure 21 (8029373) Arc Chute Fin Spacing

3. Check to insure that electrical connections to the blow-out coils are tight.

4. When reassembling the arc runner assemblies, check that the spacers (5 and 12) Figure 19 are correctly installed.

5. Before bolting the upper supports in place, make certain that the upper arc runner assembly is tight against the arc chute side so that the gap between the upper insulation and the arc chute sides (6) is a minimum. The throat coolers (7) should also be assembled tightly against the arc chute sides.

6. Make certain that the electrical connections are tight.

Reassemble the interrupter on the breaker as described under INTERRUPTER REMOVAL AND REPLACEMENT, page 16.

CONTACTS

Open the breaker and remove the box barriers and interrupters as previously described. To remove the contacts, proceed as follows:

A. Stationary Arcing Contacts (10) Figure 22.

1. Disconnect the contact braids (7) from the contact fingers by removing two bolts and locking plates (8).

2. Grasp the lower end of the contact fingers with pliers and pull contact assembly downward to remove from stud assembly.

3. To disassemble braids from stud plate remove one bolt (5).

4. To disassemble stud plate from contact support, remove two bolts (6).

5. Reassemble in the reverse order, make sure locking plates are properly reassembled with bolts (8).

B. Movable Arcing Contact (14) Figure 23.

1. Remove the assembly bolts (12) making note of quantity and location of shims and spacers used between contacts and contact arms.

2. Reassemble in reverse order, reusing the shims and spacers.

3. Close the breaker slowly to check that the movable arcing contact is approximately centered on the stationary arcing contact and that it does not rub on either side of the throat barrier (9).

NOTE: Whenever it is found necessary to replace arcing contacts on

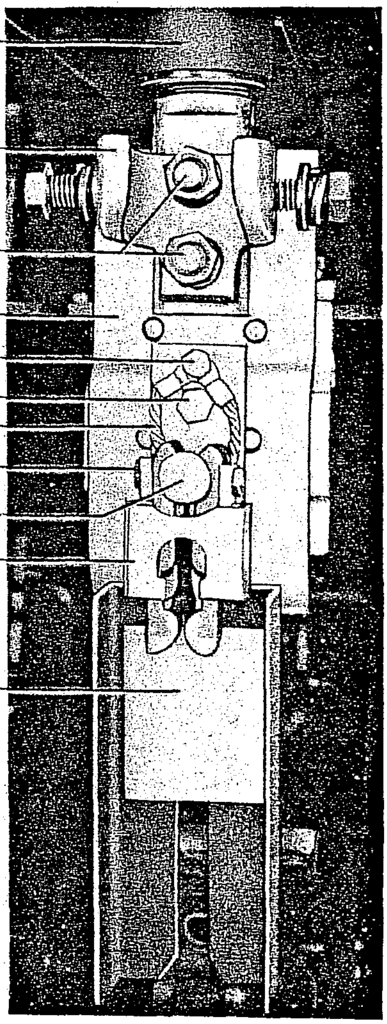

Figure 22. (8039586) Rear Bushing Assembly

1. Rear Bushing
2. Guide and Support for Interrupter
3. Bolts for Contact Support
4. Contact Support
5. Bolt for Flexible Braid
6. Mounting Bolt
7. Flexible Braid
8. Connection Bolt
9. Stud for Mounting Arcing Fingers
10. Stationary Arcing Contact Assembly
11. Throat Barrier

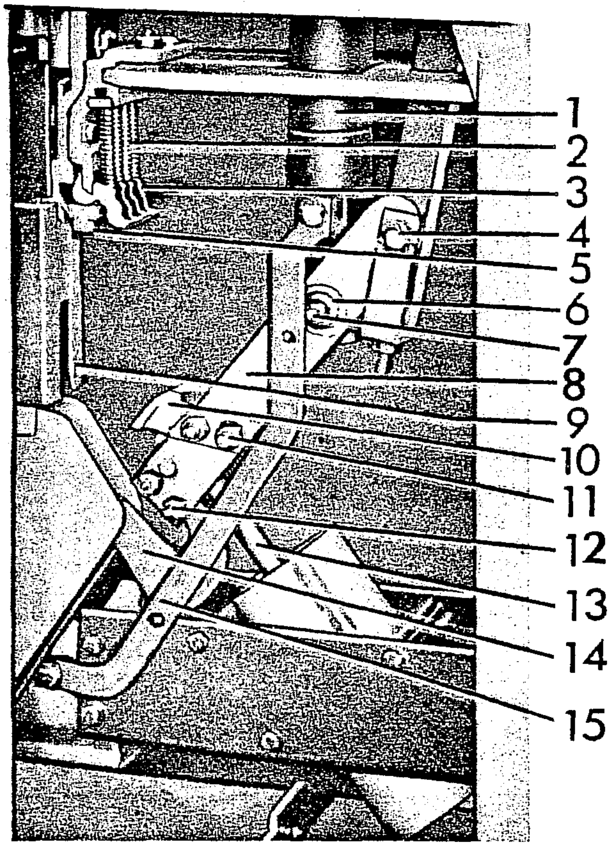

Figure 23. (8038805) Contact Assembly

1. Front Bushing
2. Contact Springs
3. Stationary Primary Contacts
4. Operating Rod Pin
5. Buffer
6. Cup Bearing
7. Hinge Pin
8. Contact Arm
9. Throat Barrier
10. Movable Primary Contacts
11. Assembly Bolts
12. Assembly Bolts
13. Piston Assembly
14. Movable Arcing Contact
15. Connection Bar

any pole of a breaker it is recommended that both the stationary and movable contacts on that pole be replaced at the same time.

C. Stationary Primary Contacts (9) Figure 24.

1. Compress the contact spring (6) by use of the spring compressor.

2. Remove spring and spring guide (1).

3. Raise the contact finger to clear the primary contact stop plate (8) and lift the finger out of contact support (7). Remove one contact finger at a time.

To replace the Stationary Primary Contacts:

1. Apply a thin coating of D50H47 grease on the hinged edge of the finger (9) then place it on the contact support

(7) so that it is retained by stop plate (8).

2. Open spring compressor (3) and assemble spring guide, spring and spring compressor (Figure 24A).

3. Turn nut (2) in clockwise direction to compress contact spring (Figure 24B). Hold spring firmly in yoke on spring compressor to prevent spring from slipping out of the compressor.

4. Place washer (not shown) on guide on top of spring, place top of guide into hole in spring retainer (4) and the round end of spring guide in cutout in primary finger (Figure 24C).

5. Hold spring assembly firmly in place and remove spring compressor.

D. Movable Primary Contacts (10) Figure 23.

To replace the movable primary contacts on a 1200 ampere breaker proceed as follows:

1. Disassemble nuts from assembly bolts (11) and remove the movable primary contacts (10).

2. Reassemble in reverse order.

To replace the movable primary contacts on a 2000 ampere breaker it is first necessary to disassemble the movable arcing contacts, then proceed as follows:

1. Disassemble operating rod pin (4), first noting quantity and location of washers in the assembly.

2. Pry contact arms (8) apart enough to disengage pivot pins of piston assembly (13) allowing piston to drop down into its booster cylinder.

3. Rotate the two parts of the contact arm assembly away from each other so assembly bolts (11) are accessible and movable primary contacts (10) can be removed.

4. Reassemble in reverse order.

E. Contact Arm Assembly (8, 10, 13, 14) Figure 23.

1. Remove connection bar (15).

2. Disassemble hinge pin (7), cup bearing (6) and operating rod pin (4) noting quantity and location of any washers and spacers used in assemblies.

3. The contact arm assembly including the piston assembly (13) can now be removed.

4. When reassembling, first insert piston tube assembly (13) into the booster cylinder and reassemble the cup bearing, making sure the silvered contact washers between the bushing and contact arms (both sides) are in place.

5. Reassemble operating rod pin (4) and connection bar (15).

F. After disassembly and reassembly of any contacts, check all contact adjustments as described under ADJUSTMENTS.

BUSHINGS

IMPORTANT: DO NOT REMOVE ALL SIX BUSHINGS AT ONCE. The bushings have been carefully aligned with the breaker frame, during assembly at the factory, and it is important that this alignment be maintained to insure interchangeability of the breakers in the metal-clad units. It is, therefore, recommended that the bushings be removed and reassembled one at a time. Also, before removing any one bushing, measure the distance from that particular bushing to adjacent bushings in both directions, so that it may be reinstalled in the same location.

However, it is possible to remove and reassemble three bushings at one time. If this is preferred, alignment of the bushings may be accomplished by placing the breaker in a de-energized spare metal-clad unit before tightening the bushing mounting bolts. This must be done before the interrupters are reinstalled.

To replace the bushing, proceed as follows:

Rear Bushing

1. Open the breaker and remove the box barriers and interrupters as already described.

2. Remove the horizontal barrier (14) Figure 8.

3. Remove the four bolts at the mounting flange of the rear bushing being removed and lower the bushing assembly.

NOTE: Shims may be found between the breaker mounting plate and the bushing mounting flange on some, or all bolts. These shims are for squaring up the bushing and may be required when new bushings are assembled.

4. Referring to Figure 24, disassemble the primary contact springs (6) as previously described.

5. Disassemble the spring retainer (4) by removing mounting bolts (5).

6. Referring to Figure 22, disassemble the contact support (4) and interrupter mount-

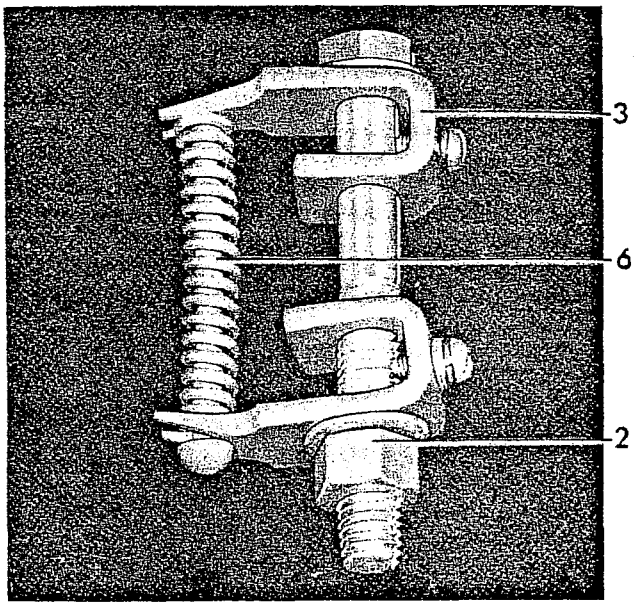

Figure 24A (8034466)

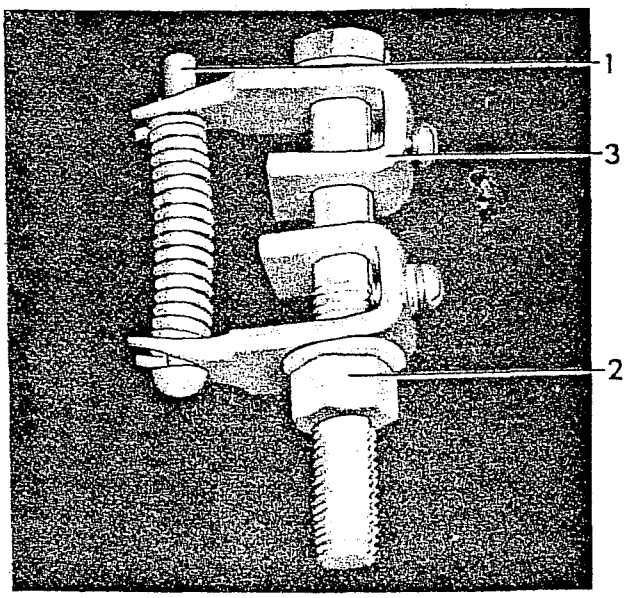

Figure 24B (8034465)

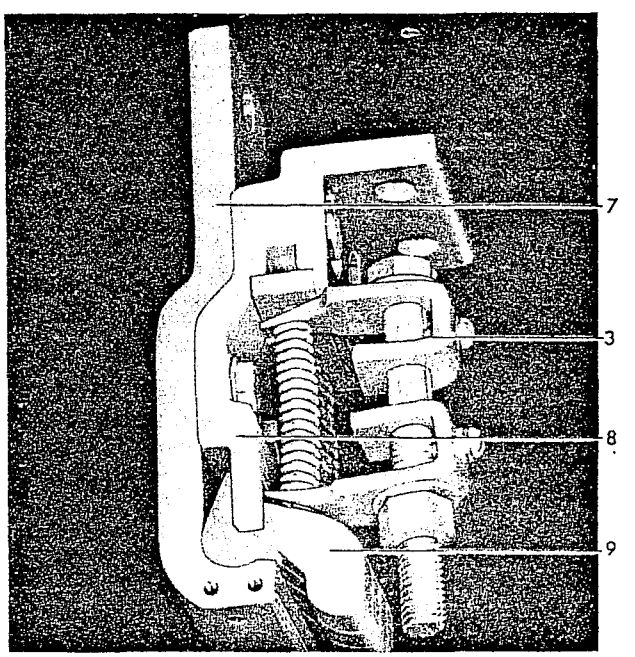

Figure 24C (8034469)

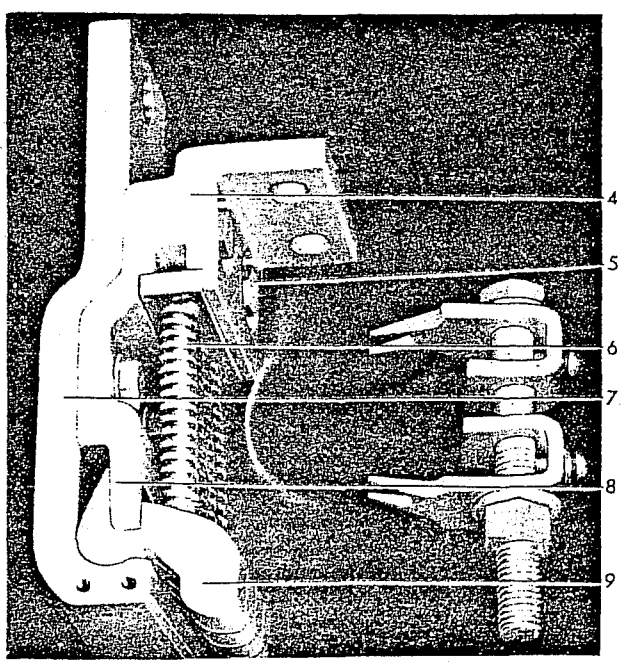

Figure 24D (8034468)

Figure 24. Method of Installing Primary Contact Springs Using a Spring Compressor

1. Spring Guide
2. Compressor Nut
3. Spring Compressor
4. Spring Retainer
5. Assembly Bolts
6. Spring
7. Contact Support
8. Stop Plate
9. Stationary Primary Finger

ing bracket (2) removing two bolts (3).

7. Reassemble in the reverse order. The interrupter mounting bracket (2) is not symmetrical and must be assembled correctly to orient the interrupter properly on the breaker. The longest projection of the bracket should be toward the lower end of the bushing.

ront Bushing

1. Open the breaker and remove the box barriers and interrupters as already described.

2. Remove the horizontal barrier (14) Figure 8.

3. Remove the connection bar (15) Figure 23, cup bearing (6) and hinge pin (7).

4. Remove the four bolts at the mounting flange of the front bushing being removed, and lower the bushing. (See note under rear bushings concerning use of shims).

5. When reassembling, first mount the bushing and assemble the cup bearing (6), contact arm (8), and replace pin (7) being sure the silvered contact washers between the bushing and contact arms are in place. The contact surfaces at the hinge point of the contact blade and bushing should have a thin coating of D50H47 grease.

6. Check all contact adjustments as outlined under ADJUSTMENTS.

NTERLOCK SWITCH

To remove the interlock switch (4) Figure 12, emove the two mounting screws and disconnect he lead wires. Reassemble in the reverse order nd check the switch adjustments as explained nder ADJUSTMENTS.

LATCH CHECKING SWITCH

To remove the latch checking switch (5) Figure 12, (when furnished), remove the two mounting screws and disconnect the lead wires. Reassemble in the reverse order and check the switch adjustments as explained under ADJUSTMENTS.

MOTOR, RELAY AND LIGHT SWITCHES

Two or three switches (7) Figure 6, are mounted in tandem as required by the application.

1. Remove the opening spring per instructions below.

2. Remove two mounting bolts (4) from switch bracket (5).

3. Remove the two mounting screws of the lower switch.

4. Remove the two mounting screws of the center switch.

5. Remove the two mounting screws of the upper switch.

6. Disconnect the lead wires of switch to be replaced.

7. Reassemble in the reverse order and check switch adjustment as explained under ADJUSTMENTS.

TRIP SHAFT AND LATCH (See Figure 11)

1. Remove spring discharge crank (3), manual trip lever (11) and if furnished, the latch checking switch operating arm (2) from the trip shaft.

2. Disengage trip latch spring (1).

3. Remove three (3) cotter pins from trip shaft.

4. Remove trip arm screw (10) and trip latch set screw (8).

5. Place a block between the trip latch (9) and the left side of the mechanism frame. Drive the trip shaft to the left until the latch is free of the key, then remove the key.

6. Check for and remove any burrs raised around the keyway on the shaft to avoid damaging the trip shaft bearings.

7. Shaft, latch, etc., may now be removed by driving it to the left. Note quantity and location of washers used as spacers in the assembly.

8. Reassemble parts in reverse order. Be sure trip latch is aligned in center of trip latch roller and that the latch spring is properly installed. Check latch adjustment as described under ADJUSTMENTS.

TRIP LATCH ROLLER BEARING

1. Remove two cotter pins at ends of trip latch roller shaft (8) Figure 13.

2. Partially remove shaft out right side of frame until latch roller (6) is free.

3. Reassemble in reverse order with proper spacing of washers. Be sure latch roller rotates freely.

CLOSING LATCH

1. Remove cotter pins at both ends of closing latch shaft (9) Figure 6.
2. Remove spring and paddle (12).
3. Remove set screws from latch (8).
4. Move shaft (9) to left (away from frame) by tapping lightly on the inside end of shaft. Rotate shaft and continue tapping until shaft is free. Shaft will push outside needle bearing from housing.
5. Reassemble in reverse order putting bearing into frame last. Use a small piece of tubing or pipe when inserting bearing to assure proper alignment.
6. Check closing latch adjustments as described under ADJUSTMENTS.

MOTOR SUPPORT

1. To remove motor support (9) Figure 15, first remove the closing latch spring (12) Figure 6.
2. Remove the retaining ring (6) Figure 15, and driving link (8).
3. Remove motor leads from the terminal board.
4. Remove six 3/8" bolts (1) Figure 15, on bottom and one 3/8" bolt on the right side (not shown).
5. Remove four mounting bolts from motor (not shown).
6. Remove the retaining ring (4) from the eccentric (5).
7. Reassemble all parts of the motor support in the reverse order and re-align it properly as described under DRIVING PAWL ADJUSTMENTS.

CAM

1. Remove two set screws from ratchet wheel (6) Figure 4 and remove wheel from main shaft (5).
2. Remove two set screws from switch cam (5) Figure 2.
3. Remove prop reset spring (4) Figure 5.
4. Remove two set screws from cam (16) Figure 7, and move cam to the right on the shaft as far as it will go. Slide the shaft to the left until key is fully exposed. Remove key and check shaft for burrs.
5. Remove shaft out left side of frame.
6. Reassemble in reverse order using the correct number of washers and spacers to properly locate the parts.
7. Rotate the mechanism through a closing operation using the manual charging wrench. Check the location of the cam follower (6) Figure 7, on the cam (16). If necessary, move the cam to correct the alignment. Complete the closing operation and check the location of the prop pin (13) on the prop (14). It should be approximately centered.

TRIP COIL

To replace the potential trip coil (6) Figure 11, proceed as follows:

1. With the breaker in the open position, remove the two mounting bolts (7).
2. Remove trip coil support (5) and spacers.
3. Cut wires at the butt connectors and remove coil.
4. When replacing the coil be sure to assemble the correct fiber spacers at the ends before bolting support (5).
5. Adjust coil location to allow approximately 1/4" of armature travel before latch starts to move.
6. Butt connect wires and check operation of solenoid electrically and mechanically.

CLOSING COIL

To remove the closing coil (15) Figure 6, proceed as follows:

1. Block the closing springs as described in INSTALLATION.
2. Remove the left hand closing spring as described in CLOSING SPRINGS below.
3. Remove two mounting bolts (11), coil support (16), and spacers.
4. Cut wires at the butt connectors and remove coil.
5. Replace the coil and the correct number of fiber spacers before bolting support.
6. Butt connect wires and check that the armature is not binding. Check coil for electrical operation.

LOSING SPRINGS

The closing springs (12) Figure 4, can be emoved as follows:

1. Charge the springs with the manual charging wrench and apply the spring blocking device as described in INSTALLATION.
2. Discharge springs by pushing manual close button (9) Figure 5.
3. Rotate cam shaft (5) Figure 4, by using the manual charging wrench until the gap between the spring (12) and the bearing block (7) is 2 inches or more.
4. Lift both springs until they clear the lower supports, then pull forward and down until the top supports are free.
5. Either discharge the opening springs by pushing the manual trip lever or block the opening springs with a suitable blocking device.

OPENING SPRINGS

To remove the opening springs (4) Figure 4, proceed as follows:

1. Charge and block the closing springs as described under INSTALLATION.
2. Push manual trip lever (8) Figure 5, to be sure the opening springs are fully discharged.
3. Remove upper pin (1) Figure 4, and lower pin (9).
4. After reassembling springs check the open gap at the primary contacts as described under PRIMARY CONTACT GAP.

RENEWAL PARTS

It is recommended that sufficient renewal parts be carried in stock to enable the prompt replacement of any worn, broken, or damaged parts. A stock of such parts minimize service interruptions caused by breakdowns, and saves time and expense. When continuous operation is a primary consideration, more renewal parts should be carried, the amount depending upon the severity of the service and the time required to secure replacements.

Renewal parts which are furnished may not be identical to the original parts since improvements are made from time to time. The parts which are furnished, however, will be interchangeable.

NOTE: The listed terms "Right" and "Left" apply when facing the mechanism end of the breaker.

ORDERING INSTRUCTIONS

1. Always specify the complete nameplate data of both the breaker and the mechanism.
2. Specify the quantity, catalog number (if listed), reference number (if listed), and description of each part ordered, and this bulletin number.
3. Standard hardware, such as screws, bolts, nuts, washers, etc., are not listed and should be purchased locally.
4. For prices, refer to the nearest office of the General Electric Company.

PARTS RECOMMENDED FOR NORMAL MAINTENANCE

In the following tabulations are listed those parts of the breaker and operating mechanism which are usually recommended for stock for normal maintenance. Other parts can be obtained by contacting the nearest office of the General Electric Company.

RECOMMENDED RENEWAL PARTS FOR TYPE ML-13 STORED ENERGY MECHANISM USED FOR AM-13.8-500-7 (*), 1200 & 2000 AMPERE (*) SUFFIX LETTERS - H, C, N, K, B, R

Fig. No.	Ref. No.	No. Req'd	Description	Catalog No.
5	10	1	Spring Charging Motor - **	
			48 V-DC	0105C9393P001
			110 & 125 V-DC & 115 V-AC, 60 Hz	0105C9393P002
			220 & 250 V-DC & 230 V-AC, 60 Hz	0105C9393P003
6	17	1	Relay - **, #	
			48 V-DC	0137A7575P004
			110 & 125 V-DC	0137A7575P001
			220 & 250 V-DC	0108B5565G004
			115V-AC, 60 Hz	0137A7575P005
			230V-AC, 60 Hz	0137A7575P002
5	3	1	Potential Trip Coil - **	
			110 & 125 V-DC	006174582G001
			220 V-DC	006174582G015
			250 V-DC	006174582G002
			115 V-AC, 60 Hz	006174582G013
			230 V-AC, 60 Hz	006174582G032
			24 V-DC	006275070G001
			48 V-DC	006275070G002
6	15	1	Closing Coil - **	
			110 & 125 V-DC	006174582G001
			220 V-DC	006174582G015
			250 V-DC	006174582G002
			115 V-AC, 60 Hz	006174582G010
			230 V-AC, 60 Hz	006174582G014
			48 V-AC	006275070G002
6	7	5	Switch, Normally Open	0456A0866P005
6	7	1	Switch, Normally Closed	0456A0866P006
5	1	1	Auxiliary Switch	0137A9192G011
6	12	1	Closing Latch Spring	0161A4231P001
5	4	1	Prop Spring	0137A9252P001
4	8	1	Driving Pawl Spring	0161A4241P001
4	2	2	Latching Pawl Spring - ø	0161A5909P001

** Refer to breaker nameplate or summary for proper voltage rating.

Quantity two (2) relays required on special control circuits. Check breaker and connection diagram.

ø Furnish 0161A4241P001 for breakers without closing spring discharge mechanism.

RECOMMENDED RENEWAL PARTS FOR MAGNE BLAST BREAKERS
TYPE AM-13.8-500-7 (*) 1200 & 2000 AMPERE
(* SUFFIX LETTERS H, C, N, K, B, R)

Fig. No.	Ref. No.	Ampere Rating	Type	Catalog No.	No. Req'd	Description
8	15	All All	H, C N, K	0165B7903 G001 0165B7903 G005	3 3	Operating Rod Assembly Operating Rod Assembly
8	23	All	All	0263B0292 P002	3	Booster Cylinder
22	7	All All	All All	0236C0791 G001 0236C0791 G004	3 3	Flexible Connector (Right) Flexible Connector (Left)
22	10	All	All	0236C0790 G009	3	Arcing Contact Assembly
23	2	1200 1200 2000	Δ B All	0414A0180 P001 0121A5964 P001 0121A5964 P001	12 18 18	Primary Contact Finger Spring Primary Contact Finger Spring Primary Contact Finger Spring
23	3	1200 1200 2000	Δ B All	0114C5382 P002 0114C5382 P002 0114C5382 P002	12 18 18	Primary Contact Finger Primary Contact Finger Primary Contact Finger
23	9	All	All	0195A7388 G002	3	Throat Barrier Assembly
23	10	1200 1200 1200 2000	Δ Δ B All	0137A9164 P003 0137A9164 P004 0114C5382 P004 0114C5382 P004	3 3 6 6	Movable Primary Contact Movable Primary Contact Movable Primary Contact Movable Primary Contact
23	14	All	All	0108B5543 G001	3	Movable Arcing Contact
23	13	1200 2000	All All	0213X0343 G092 0213X0343 G094	3 3	Tube & Piston Assembly Tube & Piston Assembly
19	7	All All	All All	0132C2737 G009 0132C2737 G010	3 3	Throat Cooler Assembly (Right) Throat Cooler Assembly (Left)
19	8	All	All	0132C2735 P007	6	Lower Runner Barrier
20	3	All	All	0108B5520 P012	3	Insulating Plate
19	13	All All	All All	0134C3547 P016 0134C3547 P017	3 3	Lower Runner Shield (Right) Lower Runner Shield (Left)
*		All	All	0265C0163 P009	6	Upper Runner Insulation
*		All	All	0802B0735 P001	6	Lower Runner Insulation

Δ All except breakers with "B" in suffix

TYPICAL ELEMENTARY WIRING FOR MAGNE-BLAST BREAKERS

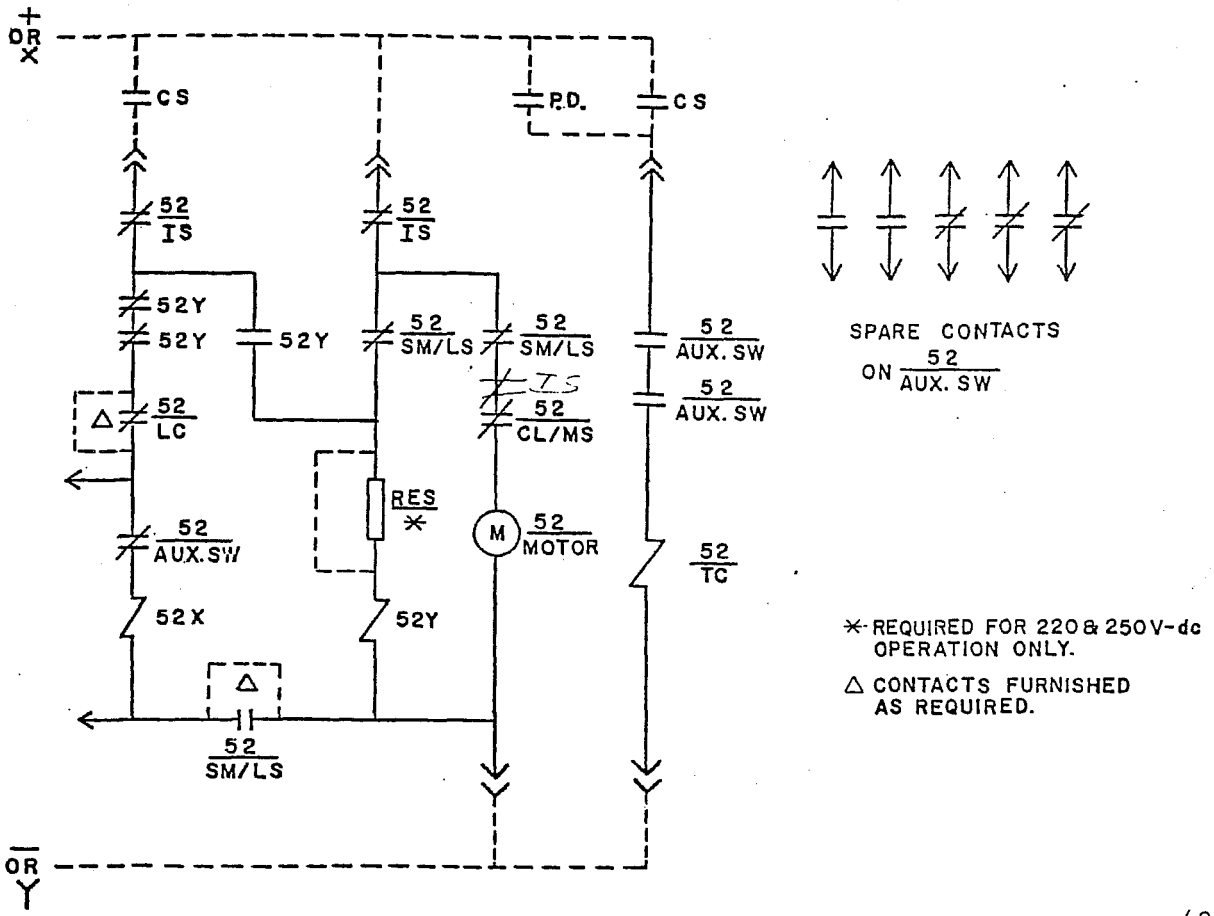

(0165B7906)

	FIG. NO.	REF. NO.	DESCRIPTION
52 AUX SW	2	3	AUXILIARY SWITCH
52X	6	15	CLOSING COIL (SPRG. REL. SOL'D)
52Y	6	17	CONTROL RELAY
52 TC	5	3	TRIP COIL
52 IS	2	2	INTERLOCK SWITCHES
52 CL/MS	6	13	CLOSING LATCH MONITORING SWITCH
52 SM/LS	6	7	POWER SWITCHES
52 LC	6	1	LATCH CHECKING SWITCH
52 MOTOR	2	11	SPRING CHARGING MOTOR

FIELD SERVICE OFFICE CODE KEY

- * Mechanical & Nuclear Service
- † Electrical & Electronic Service
- ‡ Marine Service
- ‖ Transportation

FOR YOUR LASTING SATISFACTION . . . with the performance and availability of your General Electric equipment, GE provides this nationwide network of field service offices, serving utility, industrial, transportation and marine users. Qualified field engineers provide installation, start-up, employee training, engineering maintenance and other services, throughout the productive life of the equipment. For full information, call your nearest installation & Service Engineering office.

ALABAMA
† Birmingham 35205 . . . . 2151 Highland Ave.
*† ‡ Mobile 36609 . . . . . 1111 S. Beltline Highway

ALASKA
† Anchorage 99501. . . . . 115 Whitney Rd.

ARIZONA
*† Phoenix 85012 . . . . . 3550 N. Central Ave.
† Tucson 85716. . . . . 151 S. Tucson Blvd.

ARKANSAS
† North Little Rock 72119. . . . .120 Main St.

CALIFORNIA
*† ‡ Los Angeles 90054 . . . . . .212 N. Vignes St.
† Palo Alto 94303 . . . . . 980 San Antonio Rd.
† Sacramento 95808. . . . . 2407 J St.
† San Diego 92103 . . . . . 2560 First Ave.
* ‡ San Francisco 94119 . . . 55 Hawthorne St.
* Vernon 90058. . . . . 3035 E. 46th St.

COLORADO
*† Denver 80206. . . . . 201 University Blvd.

CONNECTICUT
*† Meriden 06450 . . . . . 1 Prestige Dr.

FLORIDA
† ‡ Jacksonville 32203 . . . . 4040 Woodcock Dr.
† ‡ Miami 33134 . . . . . 4100 W. Flagler St.
*† ‡ Tampa 33609 . . . . . 2106 S. Lois Ave.

GEORGIA
*† ‡ Atlanta 30309. . . . .1860 Peachtree Rd., NW
† ‡ Savannah 31405 . . . . . 5002 Paulsen St.

HAWAII
*† ‡ Honolulu 96813. . . . . 440 Coral St.

ILLINOIS
*† ‡ ‖ Chicago 60680 . . . . . .840 S. Canal St.

INDIANA
† Evansville 47705 . . . 2709 Washington Ave.
† Fort Wayne 46807 . . . . 3606 S. Calhoun St.
*† Indianapolis 46207 . . . 3750 N. Meridian St.

IOWA
† Davenport 52805
. . . P. O. Box 630, 1039 State St., Bettendorf

KENTUCKY
† Louisville 40218 . . . . . 2300 Meadow Dr.

LOUISIANA
† Baton Rouge 70806 . . . . .8312 Florida Blvd.
*† ‡ New Orleans 70125 . . . . 4747 Earhart Blvd.
*† Shreveport 71104 . . . 2640 Centenary Blvd.
† Monroe 71201 . . . . . 1028 North 6th St.

MARYLAND
*† ‡ Baltimore 21201. . . . . 1 N. Charles St.

MASSACHUSETTS
*† ‡ Wellesley 02181 . . . . . 1 Washington St.

MICHIGAN
*† ‡ Detroit 48202 . . . . . 700 Antoinette St.
† Jackson 49201 . . . . . 210 W. Franklin St.
† Saginaw 48607
. . . . . 1008 Second National Bank Bldg.

MINNESOTA
† ‡ Duluth 55802 . . . . . 300 W. Superior St.
*† ‡ Minneapolis 55416 . . . 1500 Lilac Drive So.

MISSOURI
*† Kansas City 64199. . . . . 911 Main St.
*† St. Louis 63101 . . . . . .1015 Locust St.

MONTANA
† Butte 59701 . . . . . 103 N. Wyoming St.

NEBRASKA
*† Omaha 68102 . . . . . 409 S. 17th St.

NEW JERSEY
*† Millburn 07041. . . . . 25 E. Willow St.

NEW YORK
† ‡ Albany 12205. . . . 15 Computer Drive, West
*† ‡ Buffalo 14205 . . . . . 625 Delaware Ave.
*† ‡ ‖ New York 10022 . . . . . 641 Lexington Ave.
* Rochester 14604. . . . . 89 East Ave.
*† ‡ Syracuse 13206 . . . . . .3532 James St.

NORTH CAROLINA
*† ‡ Charlotte 28207. . . . . 141 Providence Rd.
* Wilmington
Reigelwood 28456 . . . . . P. O. Box 186

OHIO
*† Cincinnati 45206. . . . . .2621 Victory Pkwy.
*† ‡ Cleveland 44104 . . . . . 1000 Lakeside Ave.
† Columbus 43229 . . . . . 1110 Morse Rd.
† ‡ Toledo 43606 . . . . . 3125 Douglas Rd.
† Youngstown 44507. . . . . 272 Indianola Ave.

OKLAHOMA
*† Oklahoma City 73106. . . 2000 Classen Blvd.
† Tulsa 74105. . P. O. Box 7646, Southside Sta.

OREGON
† Eugene 97401. . . . . 1170 Pearl St.
*† ‡ Portland 97210. . . . . 2929 NW 29th Ave.

PENNSYLVANIA
* Allentown 18102 . . . . . 1444 Hamilton St.
*† ‡ Philadelphia 19102 . . . 3 Penn Center Plaza
*† Pittsburgh 15222 . . . . .300 6th Avenue Bldg.

SOUTH CAROLINA
† ‡ Columbia 29204 . . . . . 2700 Middleburg Dr.
† Greenville 29607. . 41 No. Pleasantburg Dr.

TENNESSEE
*† Chattanooga 37411
. . . . . 5800 Bldg, Eastgate Center
† Memphis 38130. . . . . 3385 Airways Blvd.

TEXAS
*† Amarillo 79101 . . . . . .303 Polk St.
*† ‡ Beaumont 77704 . . . . . .1385 Calder Ave
* ‡ Corpus Christi 78401. . 205 N. Chaparral St.
*† Dallas 75222 . . . . 8101 Stemmons Freeway
*† El Paso 79945 . . . . . 215 N. Stanton
† Fort Worth 76102 . . . . . 408 W. Seventh St.
*† ‡ Houston 77027 . . . . . 4219 Richmond Ave.
† San Antonio 78204. . . . . 434 S. Main St.

UTAH
† Salt Lake City 84111 . . 431 S. Third East St.

VIRGINIA
* ‡ Newport News 23601 . . . . . 311 Main St.
† ‡ Richmond 23230. . . . 1508 Willow Lawn Dr.
† Roanoke 24015. . . . . 2018 Colonial Ave.

WASHINGTON
*† ‡ Seattle 98188
. . . . . 112 Andover Park East, Tukwila
† Spokane 99202 . . . . . E. 1805 Trent Ave.

WEST VIRGINIA
*† Charleston 25328 . .306 MacCorkle Ave., SE

WISCONSIN
* Appleton 54911. . . . 3003 West College Dr.
† ‡ Milwaukee 53202 . . . . . 615 E. Michigan St.

GENERAL ELECTRIC SERVICE SHOPS

WHEN YOU NEED SERVICE . . . These GE Service Shops will repair, recondition, and rebuild your electric apparatus. The facilities are available day and night, seven days a week, for work in the shops or on your premises. Latest factory methods and genuine GE renewal parts are used to maintain performance of your equipment. For full information about these services, contact your nearest service shop or sales office.

ALABAMA
• * Birmingham 35211 . . 1500 Mims Ave., S. W.
• Mobile 36609 . . . . . 721 Lakeside Dr.

ARIZONA
• (Phoenix) Glendale 85019 . 4911 W. Colter St.
• Phoenix 85019 . . . . . 3840 W. Clarendon St.
• Tucson 85713. . . . 2942 So. Palo Verde Ave.

CALIFORNIA
• Los Angeles 90301 . . . . 6900 Stanford Ave.
• (Los Angeles) Anaheim 92805
. . . . . 3601 E. LaPalma Ave.
• (Los Angeles) Inglewood 90301
. . . . . 228 W. Florence Ave.
• Sacramento 95814. . . . . 99 North 17th St.
• * (San Francisco) Oakland 94608
. . . . . 1650 34th St.

COLORADO
• * Denver 80205 . . . . . 3353 Larimer St.

CONNECTICUT
• * (Southington) Plantsville 06479
. . . . . .370 Atwater St.

FLORIDA
• * Jacksonville 32203 . . . . 2020 W. Beaver St.
• (Miami) Hialeah 33010. . . 1062 East 28th St.
• * Tampa 33601 . . . . . 19th & Grant Sts.

GEORGIA
• (Atlanta) Chamblee 30341
. . . . . 5035 Peachtree Industrial Blvd.
• Atlanta . . . . . 3378 John Glenn Dr.

ILLINOIS
• * Chicago 60638 . . . . 6048 S. Nottingham Ave.

INDIANA
• Evansville 47711 . . . 401 N. Congress Ave.
• Ft. Wayne 46803. . . . . 1731 Edsall Ave.
• Hammond 46320 . . . . . 1138 164th Place
• * Indianapolis 46222 . . . 1740 W. Vermont St.

IOWA
• (Davenport) Bettendorf 52722 . 1025 State St.

KENTUCKY
• Louisville 40209. . . . 3900 Crittenden Drive

LOUISIANA
• Baton Rouge 70814 . . . 10955 North Dual St.
• * New Orleans 70114 . . . . . 1115 DeArmas St.

MARYLAND
• * Baltimore 21230. . . . . 920 E. Fort Ave.

MASSACHUSETTS
• * Δ (Boston) Medford 02155
. . . . . .3960 Mystic Valley Pkwy.

MICHIGAN
• * Δ (Detroit) Riverview. . . . 18075 Krause Ave.
• Flint 48505 . . . . . 1506 E. Carpenter Rd.

MINNESOTA
• Duluth 55807 . . 50th Ave. W & St. Louis Bay
• * Minneapolis 55430 . . . . 2025 49th Ave., N.

MISSOURI
• * Kansas City 64120. . . . . 3525 Gardner Ave.
• * St. Louis 63110 . . . . . 1115 East Rd.

NEW JERSEY
• New Brunswick 08902 . . . . . 3 Lawrence St.

NEW MEXICO
• Albuquerque 87109 . . . 4420 McLeod Rd. NE

NEW YORK
• Albany 12205 . . . . . 1097 Central Ave.
• * (Buffalo) Tonawanda 14150 . . 175 Milens Rd.
• (Long Island) Old Bethpage 11804
. . . . . 183 Bethpage-Sweet Hollow Rd.
• (New York City) North Bergen, N. J. 07012
. . . . . 6001 Tonnelle Ave.
• (New York City) Clifton, N. J. 07012
. . . . . 9 Brighton Rd.
• Δ Schenectady 12305 . . . . . 1 River Rd.
• Syracuse 13208. . . . 1015 E. Hiawatha Blvd.

NORTH CAROLINA
• * Charlotte 28208 . . . . . 2328 Thrift Rd.

OHIO
• Akron (Canton) 44720
. . . . . 7900 Whipple Ave. N. W.
• * Cincinnati 45202. . . . . .444 West 3rd St.
• * Δ Cleveland 44125 . . . . . 4477 East 49th St.
• Columbus 43229 . . . . . 6660 Huntley Rd.
• * Toledo 43605 . . . . . 405 Dearborn Ave.
• Youngstown 44507. . . . 272 E. Indianola Ave.

OKLAHOMA
• Tulsa 74145. . . . . 5220 S. 100th East Ave.

OREGON
• Eugene 97402 . . . . . 570 Wilson St.
• * Portland 97210 . . . . . 2727 NW 29th Ave.

PENNSYLVANIA
• Allentown 18103 . . . . . 668 E. Highland St.
• (Delaware Valley) Cherry Hill, N. J., 08034
. . . . . 1790 E. Marlton Pike
• Johnstown 15802 . . . . . 841 Oak St.
• Philadelphia 19124 . . . 1040 East Erie Ave.
• * (Pittsburgh) West Mifflin 15122
. . . . . 4930 Buttermilk Hollow Rd.
• York 17403 . . . . . .54 N. Harrison St.

SOUTH CAROLINA
• (Charleston) No. Charleston 29401
. . . . . 2490 Debonair St.

TENNESSEE
• Knoxville 37914
. . . . . 2621 Governor John Sevier Hwy.
• Memphis 38107. . . . . 708 North Main St.

TEXAS
• Beaumont 77705 . . . . .1490 W. Cardinal Dr.
• Corpus Christi 78401 . . . . . 115 Waco St.
• * Dallas 75235 . . . . . .3202 Manor Way
• Houston 77036 . . . .5534 Harvey Wilson Dr.
• Houston 77036 . . . . . 6916 Harwin Dr.
• Midland 79701 . . . . . 704 S. Johnston St.

UTAH
• * Salt Lake City 84110 . . . 301 S. 7th West St.

VIRGINIA
• * Richmond 23224 . . . . . 1403 Ingram Ave.
• Roanoke 24013 . . . . . 1004 River Ave., SE

WASHINGTON
• * Seattle 98134 . . . . . 3422 First Ave., South
• Spokane 99211 . . . . . E. 4323 Mission St.

WEST VIRGINIA
• * Charleston 25328 . .306 MacCorkle Ave., SE

WISCONSIN
• (Appleton) Menasha 54910 . . 1725 Racine St.
• Milwaukee 53207 . . . 235 W. Oklahoma Ave.

• Electrical/Mechanical Service Shop * Instrumentation Shop Δ Special Manufacturing Shop

INSTRUCTIONS

OIL-BLAST CIRCUIT BREAKERS

TYPE FKP WITH ML 14 MECHANISM

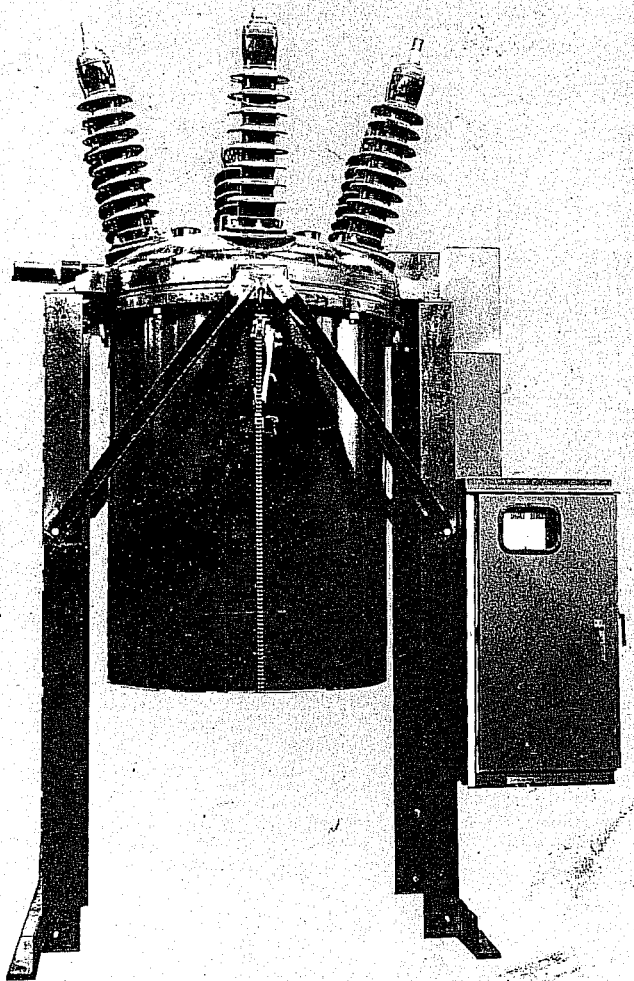

(H4476)

These instructions do not purport to cover all details or variations in equipment nor to provide for every possible contingency to be met in connection with installation, operation or maintenance. Should further information be desired or should particular problems arise which are not covered sufficiently for the purchaser's purposes, the matter should be referred to the nearest office of Canadian General Electric Company Limited.

CONTENTS

	PAGE
INTRODUCTION	1
RECEIVING, HANDLING AND STORAGE	1
Unpacking and Handling	1
Storage	3
DESCRIPTION	3
Breaker	3
Bushings	4
Bushing Current Transformer	4
Oil	5
INSTALLATION	5
Location	5
Mounting	5
Connections	6
Tanklifter	6
Adjustments	7
OPERATION	16
MAINTENANCE	17
Precautions	17
Periodic Inspection	17
Repairs and Replacement	18
RENEWAL PARTS	23

OIL-BLAST CIRCUIT BREAKERS TYPE FKP WITH ML 14 MECHANISM

INTRODUCTION

The type FKP oil-blast breakers have been designed especially for applications on transmission lines where high speed reclosing performance is required. High speed interruption of faults is obtained by the use of contacts employing the oil-blast principle of circuit interruption. High speed reclosing is obtained by the use of a simple rugged linkage which operates on low-friction bearings, and by employing arc resistant materials for the interrupting contacts.

To facilitate installation, the breaker has skids mounted on the front and rear of the frame. The operating mechanism is installed in a weatherproof housing which is mounted on the front end of the breaker framework. The three phases are mechanically connected so as to operate simultaneously.

The FKP breaker is available in a number of current and voltage ratings. For the complete rating information of any particular breaker, refer to the breaker nameplate.

The short circuit conditions to be imposed on the breaker must not exceed its rating, nor should it be called upon to operate at voltages or currents greater than those given on the nameplate. These breakers may be used at any altitude up to 3300 feet. Use at higher altitudes requires selection of special bushings.

NOTE

Proper installation and maintenance are necessary to insure continued satisfactory operation of the breaker.

The following instructions will provide information for placing the oil-blast breaker in service and for maintaining successful operation. It should be kept in mind that the illustrations shown in this instruction book are for illustrative purposes and may not always be an actual picture of the equipment being furnished. For final information always refer to the drawings which are furnished separately with the equipment. For additional instructions concerning the operating mechanism and auxiliary equipment, refer to the individual instruction books for these devices.

RECEIVING, HANDLING AND STORAGE

All breakers are assembled and tested at the factory. Normally, they are shipped completely assembled; that is, with the bushings, bushing current transformers, interrupters, moving contact members, and breaker linkage in place. The operating mechanism and its housing are shipped assembled on the front end of the framework.

Immediately upon receipt of this equipment examine it for any damage that might have been sustained in transit. If injury or rough handling is evident, a damage claim should be filed with the transportation company and the nearest Canadian General Electric Company Limited Apparatus Sales Office should be notified promptly.

UNPACKING AND HANDLING

Crating or boxing must be removed carefully. Use a nail puller to open the crates and do not allow either the crate or the bushing to be struck by tools while handling. The porcelains of the bushings and other parts are sometimes broken by carelessly driving a wrecking bar into the crates or boxes. If any parts made of insulating material are shipped separately, they should be protected from moisture, dirt, and damage due to rough handling. Check all parts against the packing list to make certain that no parts have been overlooked while unpacking. Always search the packing material for hardware which may have loosened in transit. All tags should be left on the

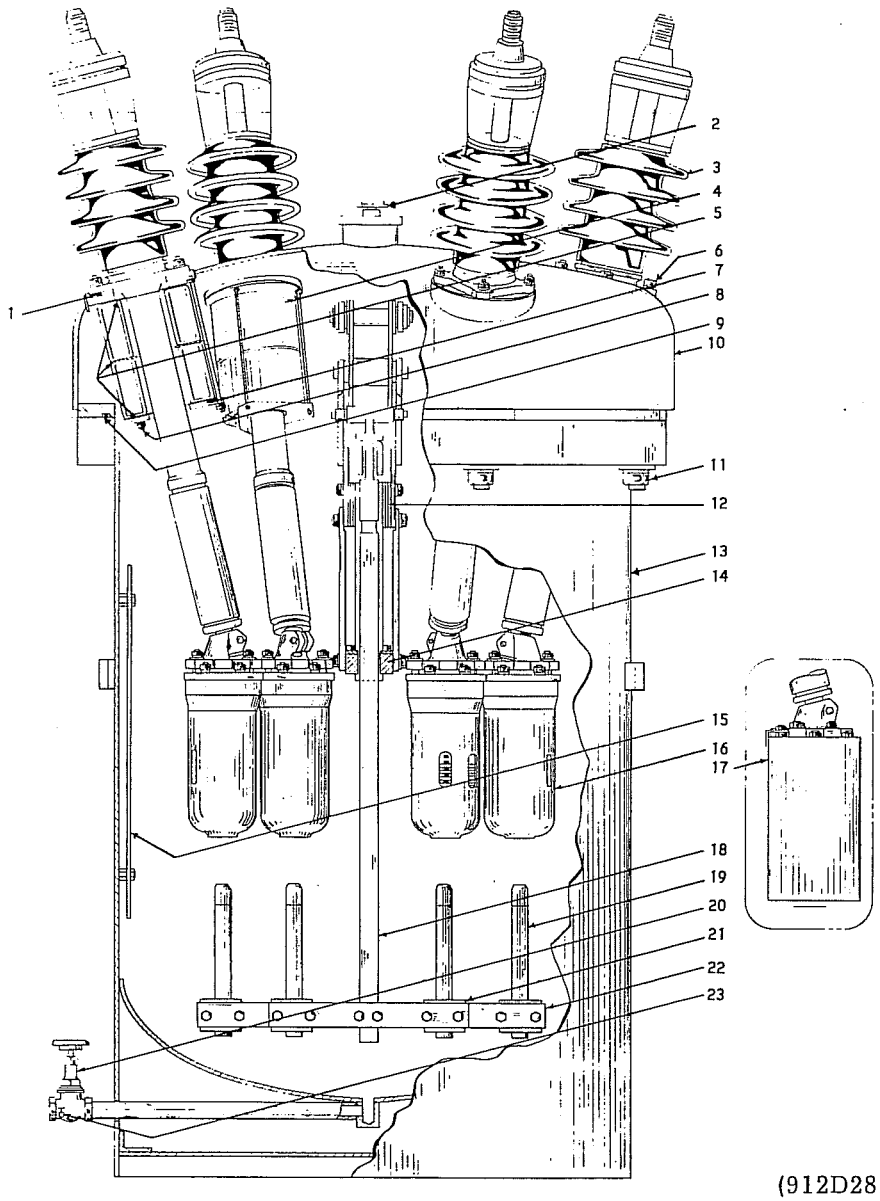

1. H.V. Bushing Gasket
2. Breather
3. Bushing
4. Current Transformer
5. Insulation Washers
6. Mounting Stud
7. Support Plate
8. Assembly Stud
9. Gasket
10. Tank Dome
11. Tank Nut
12. Shims
13. Tank
14. Lift Rod Guide
15. Liner
16. Standard Interrupter
17. Capacitor Switching Interrupter
18. Lift Rod
19. Contact Rod
20. Drain Valve
21. Contact Block
22. Crossarm Device
23. Sampling Device

Oil Per Tank 295 GAL.

Figure 1 FKP Breaker - Cross-Sectional View

parts until they are ready for installation. Cables used to lift the breaker should be as long as possible to prevent damage to the bushing.

STORAGE

When the breaker can be set up immediately in its permanent location and filled with oil, it is advisable to do so, even though it will not be placed in service for some time. The oil tanks should be cleaned and dried before they are filled with oil. The crating, if used, should not be taken from the bushings until after the breaker has reached its permanent location and all overhead work has been completed.

If stored outdoors, the breaker tank should be filled with oil to protect the insulating parts. The space heater in the operating mechanism housing should be energized as soon as possible in order to prevent moisture condensation inside the housing.

If the interrupters are stored separately, they should be kept in a dry room. If they must be left outdoors for a short time, they should be thoroughly covered to protect them from the weather. Under extreme conditions of humidity, or if the only storage space is damp, they should be kept in suitable containers filled with GE #10-C oil.

Replacement parts, especially lift rods, guides and other parts made of insulating material, should be stored in a dry room. It may also be advisable to hang the lift rods and guides in a vertical position to minimize the possibility of warpage, if a level storage surface is not available.

DESCRIPTION

BREAKER

Each circuit breaker is composed of an operating mechanism and a breaker assembly mounted on a common framework, as shown in figure 2. The breaker assembly consists of an oil tank, which contains the interrupters and contacts, and a top frame, which houses the breaker linkage and bushing current transformers and supports the bushings and contacts.

The breaker linkage, which is assembled in the top frame, is designed to give straight line motion to the moving contacts and to convert the motion of the operating mechanism to the proper breaker stroke. The breaker linkage is connected to the operating mechanism by an adjustable connecting rod.

A gas and oil seal is provided around the horizontal connecting rod to form a separation between the front crank box and the oil tank. An adjustable opening spring, located on the end of the operating rod, insures positive opening action and determines contact speed and parting time.

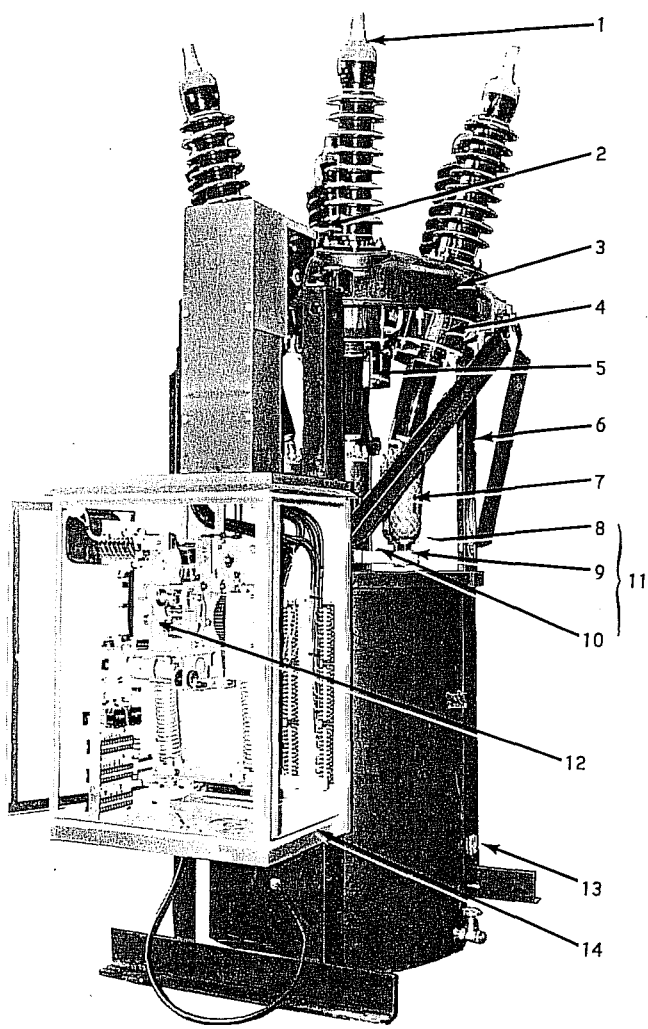

(H4478)

1. Bushing
2. Closing Buffer
3. Top Frame
4. Bushing Current Transformer
5. Opening Dashpot
6. Framework
7. Interrupter
8. Contact Rod
9. Crossarm
10. Lift Rod
11. Moving Contact Assembly
12. Mechanism
13. Ground Pad
14. Mechanism House

Figure 2 Type FKP Breaker - Major Assembly Units

A closing buffer and an oil filled opening dashpot are located in each phase. The closing buffer is used to prevent excessive overtravel of the moving contacts on closing and the opening dashpot is used to absorb the energy of the moving parts at the end of the opening stroke. The dashpots use the same kind of oil as used in the breaker tank. They are self-contained and will operate properly whether the oil tanks are filled or not. Since very little oil is lost during breaker operation, they will require only periodic inspection.

A 'breather' (2, figure 1) is mounted on the center phase buffer (14, figure 6) to vent any oil vapor caused by circuit interruption.

An oil gauge (25, figure 5) installed near the top of the tank, indicates the oil level directly. The correct oil level at normal temperature (20°C) is indicated on the breaker outline drawing and by a painted line on the gauge glass. The minimum oil level is the bottom of the visible portion of the gauge glass. This corresponds to the portion of the bushing which must always be immersed in oil.

The oil tank (13, figure 1) is suspended in place against the tank dome (10) by eight bolts which compress a gasket. The bolts must be tight to prevent oil leakage by the tank gasket during circuit interruption. This arrangement permits easy removal of the tanks for inspection and maintenance of the contacts and interrupters. A drain valve (20) is attached to a drain pipe at the bottom of the tank so that the tank can be completely emptied. The valve should be capped or plugged to prevent any possible leakage.

Each interrupter is mounted on the lower end of a bushing (3) by means of an adapter, which is also used to permit alignment of the interrupter.

Refer to figure 3. The interrupter consists essentially of a fiberglas tube enclosing a set of six primary contact fingers, two of which have arcing tips, and a baffle stack. The body tube has two port openings which allow the proper flow of oil across the contacts and through the baffles during interruption.

For a detailed explanation of the operation of the breaker refer to the section OPERATION. For complete information on the operating mechanism, see the mechanism instruction book PGEI 1315.

BUSHINGS

The bushings are installed in the top frame from above. Weathertight gaskets are inserted between the support flange and the top frame. Each bushing has provisions for two current transformers and the bushings can be installed and removed from the breaker without disturbing the bushing current transformer.

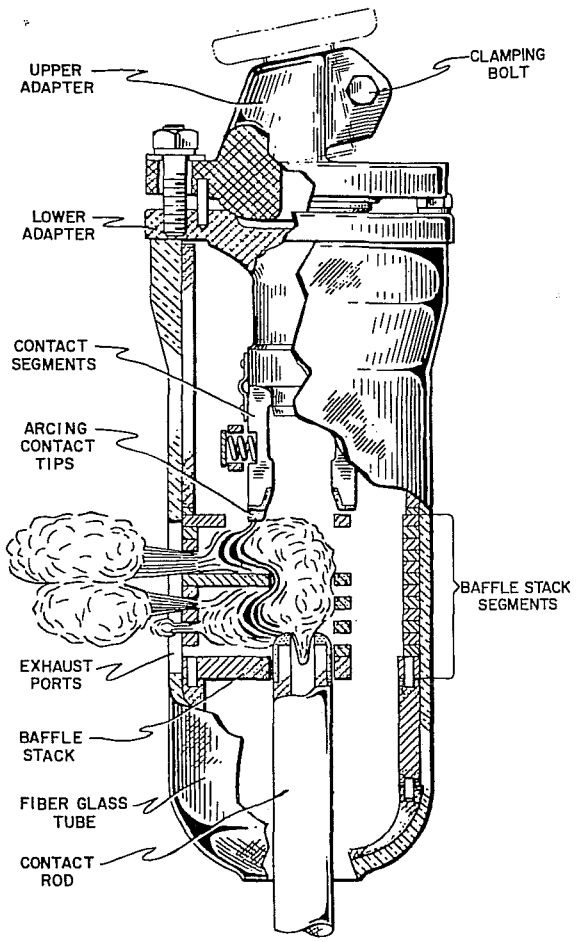

Figure 3 View of Interrupter Showing Arc Interruption

BUSHING CURRENT TRANSFORMER

Bushing current transformers, Type BR are used on these breakers to provide a source of current supply for operating breaker trip coils and protective relays. Relaying transformers are of the multi-ratio type having leads which provide a wide range of ratios. Ratio and accuracy classification for standard transformers are in accordance with NEMA SG-4 specifications.

High accuracy single tap metering type current transformers can also be furnished. These have compensation applied for specified loadings and cannot be used on other loadings without affecting their accuracy. Ratio and accuracy classification for standard transformers of this type are also in accordance with NEMA SG-4 specifications.

Performance data in the form of ratio curves are available for standard transformers of standard ratios. These are supplied with the order or can be secured from the Power Delivery Department by giving the proper references.

Bushing current transformers are mounted inside the top frame. They are installed from underneath the top frame and they can be slipped over the lower end of the bushing, although the interrupters must be removed first. A supporting ring bolted to the top frame holds the transformer in place. Insulation washers above and below the transformer protect it from injury. It must be properly centered in the housing to prevent damage when the bushing is installed.

Leads from each transformer are carried on the inside of the top frame to the operating mechanism housing. These pass through a hole in the back plate of the housing and through an oil seal inside the housing.

Transformers should be connected in accordance with instruction 296 to ensure proper polarity and correct connections.

OIL

The specified high-speed performance of the modern oil-blast breaker is dependent upon the use in the breaker of oil having the proper characteristics. It is recommended that GE #10-C oil be used in these breakers since its characteristics, particularly at low temperatures, make it especially suited for use in oil-blast breakers.

Before final adjustments are made, the oil tank should be filled with GE #10-C oil. Precautions must be taken to be sure of absolute dryness and cleanliness of the apparatus before filling and to prevent the entrance of water and dirt during the transfer of oil to the apparatus. For more detailed information on equipment and procedure for filtering GE #10-C oil, obtain Bulletin GEA-4937 from the nearest Canadian General Electric Sales Office.

FILLING THE TANK

Before filling with oil, all accessories, such as the drain valve and oil gauge, must be oiltight. The threads should be filled with*Glyptal or equivalent. A plug is furnished for the outlet side of the drain valve and should be used to prevent any leakage if the valve seat becomes damaged from use.

In filling, care must be taken so that moisture will not be absorbed by the oil during the filling process. When cold drums of oil are brought into a warm place, they should be allowed to stand before opening until there is no condensation on the outside and until they are thoroughly dry. The preparation and filling should be done on a clear, dry day or adequate protection of some kind provided against moisture being absorbed. Metal or oil-proof rubber hose must be used, as oil dissolves the sulphur in ordinary rubber hose. This may cause trouble, as sulphur attacks copper.

TESTING THE OIL

All new oil should be tested before being placed in the breaker. The dielectric strength of the oil when shipped is at least 30,000 volts when tested in a standard gap with one inch disk terminals 0.1 inch apart. New oil of less than standard dielectric strength (30,000 volts) should not be placed in the breaker oil tanks until its insulating value has been brought up to the above standard (by filtering, drying, etc.).

TANK HEATERS

Tank heaters are provided for areas of low ambient temperature. Heaters should be energized when the ambient temperature falls below 0 F.

INSTALLATION

The installation of the breaker will be facilitated by a study of those approved drawings which supplement these instructions. The approved drawings, which include an outline of the breaker and connection diagrams, provide information necessary for the proper installation of the breaker.

Before any work is done, these drawings and all related instruction books should be consulted.

LOCATION

The breaker should be located so that it will be readily accessible for cleaning and inspection. Sufficient space must be provided for operation of the tanklifter and for easy removal of the oil tank. The breaker should be mounted high enough so that it can be operated with the oil tank lowered without the moving contacts splashing in the oil. Where flood conditions exist, the mechanism housing should be above high water level.

MOUNTING

The total weight of the breaker with oil is given on the outline drawing and on the nameplate. This information will serve as a guide to the strength of the lifting means required for handling the breaker. It may be lifted by hooking into the framework. When using cable slings, do not allow the slings to strike the bushings, as any strain on these may cause them to crack or break.

As the breakers are shipped assembled on their frameworks, it is only necessary to correctly locate and fasten the frame in position on its foundation. The foundation bolts should be left loose to permit the frame to be properly plumbed and leveled by inserting shims under the feet of the frame where necessary. After this has been done, the foundation bolts should be tightened and the frame fastened securely to its foundation.

* Reg. trade-mark of General Electric Co.

CONNECTIONS

After the breaker has been located, electrical connections can be made.

WARNING

BEFORE MAKING THESE, ENSURE THAT ALL LEADS TO BE CONNECTED TO THE BREAKER ARE DE-ENERGIZED.

PRIMARY CONNECTIONS

Leads should be brought down from above if possible. Ample electrical clearance must be provided between these leads and parts of the station, such as walls, channels, and framework. Leads should be properly supported so that the breaker bushings are not subjected to unnecessary strains. The bushings should not carry cable or bus bar strains. To avoid overheating, the connecting leads must be of a current-carrying capacity at least equal to the maximum operating current of the circuit, which should not exceed the breaker rating.

Connections to the breaker are made by bolted connectors fastened to the ends of the bushings. The bolts on the terminal connectors must be securely tightened to obtain good contact. All joints must be clean, bright and free from dents or burrs.

CONTROL AND SECONDARY WIRING

All control wires should be run in conduit insofar as it is practicable. Control wires must be run separately and remote from high tension leads and must not be run in the same duct or parallel to the high tension leads unless the distance separating the two sets of wiring is sufficient to prevent possible communication between them as a result of short circuits. Control wiring of adequate size should be used so that with full operating current flowing to the operating mechanism, the voltage across the terminals of the mechanism will be within the limits specified as standard for the range of control voltage. It is recommended that all conduits entering the mechanism housing be sealed off at their entrances to the housing.

Control and bushing current transformer connections are made inside the operating mechanism housing where suitable terminal boards are provided. Connection diagrams are supplied for each breaker showing the proper connections for the operating mechanism and the bushing current transformers. Remove the shorting wires from the BCT terminal boards only after the BCT circuitry is completely wired.

GROUND CONNECTIONS

The framework of each breaker should be permanently grounded. The usual practice is to connect a heavy cable to the framework and to the ground. A grounding pad is provided on a leg of the framework to which a terminal can be attached. The grounding cable should be of sufficient size to carry 25 percent of the current rating of the breaker but not smaller than #4/0.

A good permanent low resistance ground is essential for adequate protection.

WARNING

A POOR GROUND MAY BE WORSE THAN NO GROUND AT ALL, SINCE IT GIVES A FALSE FEELING OF SAFETY TO THOSE WORKING AROUND THE EQUIPMENT AND MAY RESULT IN ULTIMATE DANGER TO BOTH EQUIPMENT AND PERSONNEL.

TANKLIFTER

The hand operated tanklifter for these breakers consists of two portable hoists of either the chain or cable type. They are hooked into slots in opposite sides of the breaker frame. The operation of the tanklifters is shown in figure 4. The hoists being light and portable are easily carried by the maintenance crew.

PRECAUTIONS

1. Before removing the tank or doing any work on the breaker, make certain that the primary circuits are open and effectively grounded.

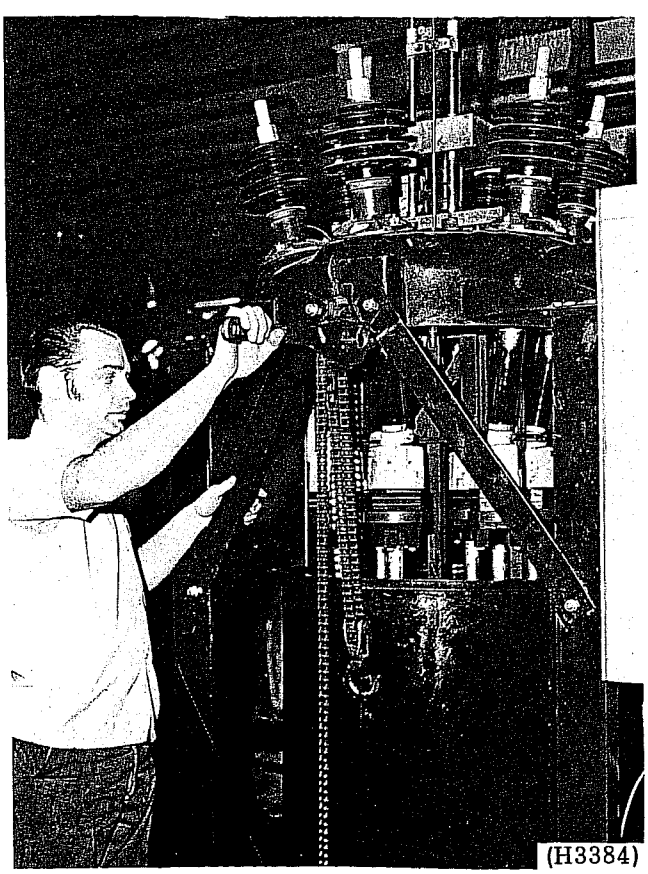

Figure 4 Tank Lifter

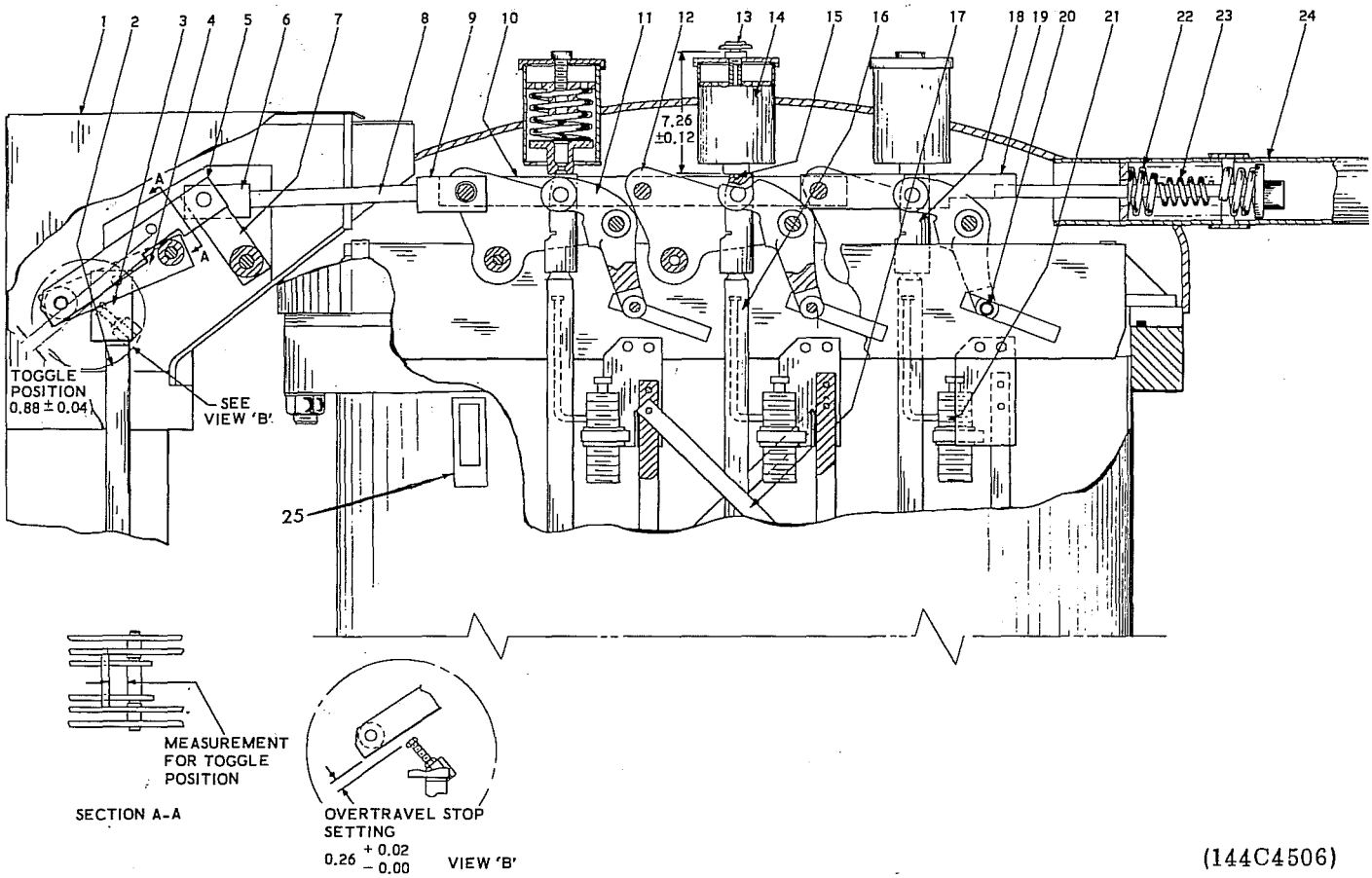

1. Front Crank Cover
2. Operating Rod
3. Front Coupling
4. Front Crank
5. Front Link
6. Connecting Rod Coupling
7. Guide Crank
8. Connecting Rod
9. Connecting Rod Coupling
10. Connecting Link
11. Lever
12. Lever
13. Breather
14. Closing Buffer
15. Analyzer Rod Connection
16. Lift Rod
17. Cross Brace
18. Lift Rod Coupling
19. Linkage Arm
20. Lever Pin
21. Opening Dashpot
22. Opening Spring
23. Follow-through Spring
24. Opening Spring Cover
25. Oil Gauge

Figure 5 Breaker Linkage

2. Make certain that all control circuits are de-energized until electrical operation is to be performed.

3. Exercise extreme care when working on the operating mechanism. See the mechanism instruction book for additional precautions and instructions.

4. Operation of the breaker in air is not recommended, although a few air operations are permitted to check the stop clearance.

5. For manual operation refer to the mechanism instruction book.

ADJUSTMENTS

Although the breaker has been completely set up, adjusted and tested at the factory, it is recommended that all adjustments be reviewed to make certain that no change has occurred during shipment and installation. The breaker should be closed slowly by hand, using the maintenance closing device, to see that it is smooth throughout closing, that no binding occurs, and that no excessive play is noticeable between parts. Electrical operation should only be attempted after it is certain all adjustments are correct. Details of the breaker adjustments are contained in the following paragraphs.

Complete instructions for checking the operating mechanism adjustments will be found in the operating mechanism instruction book.

Using the tanklifter, as shown in figure 4, the tank can be lowered, leaving the contacts and pole unit mechanisms accessible for inspection. The trip latch of the operating mechanism is wired in place during shipment and this wire must be removed before the adjustments can be checked. All blocks and wire used to hold parts in place during shipment must be removed before the breaker is tripped open.

LINKAGE POSITION ADJUSTMENT

The position adjustment is the means of determining the correct breaker linkage position when the breaker is closed.

Using the maintenance closing device, slowly close the breaker until the prop latch of the operating mechanism just falls into place to hold the mechanism in the closed position. To prevent accidental opening, insert the blocking devices per the mechanism instruction book. Measure the lift rod setting on the center phase as shown in figure 5. This measurement is 7.26 inches plus or minus 0.12 inch.

The first and third phase lift rod settings are plus or minus 0.12 inch from the setting obtained on the center phase.

Measure the external toggle setting. This is 0.88 inch plus or minus 0.04 inch.

Measure the lift rod to the lever pin (20, figure 5) clearance with the breaker closed. This should be a minimum of 2.94 inches. It is sufficient to measure this on phase 3 only. See 'L' figure 17.

If these adjustments must be changed, the following procedure should be followed, either completely or in part, in order to obtain the settings within the specified limits.

The breaker connecting rod (8, figure 5), as well as the vertical operating rod (2), have right- and left-hand threads. Shortening of these rods will reduce these settings. Adjustment of the toggle is attained by loosening the locking bolt in the front coupling (3) and the similar locking bolt (not shown) on the mechanism end of the operating rod. Turn this rod clockwise from the top to cause shortening of the rod and closing of the toggle. Lengthening the rod would open up the toggle. This procedure will change the position setting of the breaker linkage of all three phases at the same time. Tighten the locking bolts and recheck the toggle setting and the lift rod setting.

In a similar manner, the lift rod setting of the breaker linkage is adjusted by changing the length of the breaker connecting rod (8, figure 5). Altering the position setting may affect the closing buffer adjustment. Final measurement should be made after closing the breaker electrically with the breaker oil tanks in the down position and the contacts in air. Readjust as necessary to above values.

When adjustment is completed, be sure all hardware, locking bolts and plates are tight.

CLOSING BUFFER ADJUSTMENT

The closing buffer is set at the factory and should not require further adjustment. These units are set in conjunction with the lift rod setting and external toggle, and a change in either may require adjustment of the other. With reference to figure 6, and the breaker in the closed position, the adjusting disk (9) is turned down. As a starting point in making this setting, the top of the adjusting disk may be preset initially to approximately 1.05 inches below the top of the buffer housing (8).

When installing the cover bolt (4), insert a steel or brass rod through the pipe plug (6) hole in the cover

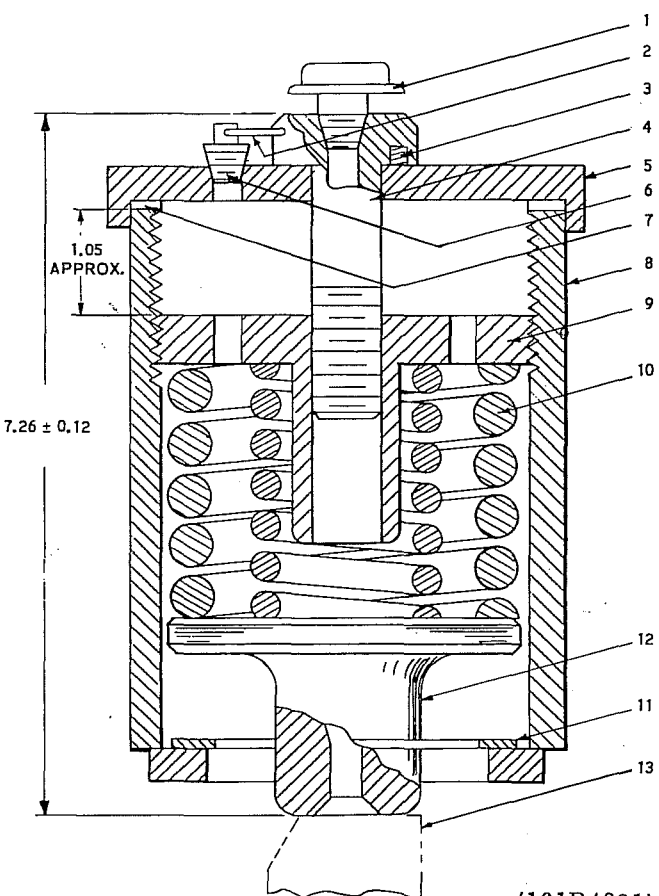

1. Breather
2. Locking Wire
3. 'O' Ring
4. Cover Bolt
5. Cover
6. Plug
7. Gasket
8. Buffer Housing
9. Adjusting Disc
10. Springs
11. Shims (Used For 3 Phase Levelling)
12. Plunger
13. Lift Rod Coupling

Figure 6 Closing Buffer

(5) and into one of the holes in the adjusting disk (9) to prevent the adjusting disk from turning while tightening the cover bolt. Remove the rod after the cover bolt is tight and insert the pipe plug (6) and the locking wire (2).

INTERRUPTER ADJUSTMENT

After the breaker linkage is adjusted, the contacts should be checked. Refer to figure 8. The interrupters (8) which are fastened to the lower ends of the bushings (4) must be aligned to a vertical position, with the two exhaust ports of each interrupter facing the tank as shown. Visualize a straight line through the center phase lift rod and through the center of each interrupter in turn. This line should pass exactly between the two exhaust ports of each interrupter when the ports face towards the breaker tank. The use of a spirit level will assist in aligning the interrupter. Loosening the adapter clamp (6) allows the interrupter to be moved in any direction about the vertical. Additional lateral adjustment is possible by loosening the bushing mounting bolts and changing the seating of the bushing. The contact rods move up through the throat of the chamber and, therefore, the centerline of the interrupter should coincide with the centerline of the contact rod (10). The crossbar (11 and 12) is slotted so that by loosening the locknuts the contact rods can be moved in or out to obtain alignment with the throat. The contact block can be turned end for end to obtain additional adjustment.

CONTACT WIPE ADJUSTMENT

1. With the breaker closed, measure distance 'a' (figure 7) for each interrupter.
2. Add 'a' plus 9.74* equals 'b' for each interrupter.

   * Dimension derived from glass tube length (nominal) less casting projection (nominal) and less 0.82 inch for clearance.

   i.e. 13.56 - 3.00 - 0.82 = 9.74
3. Adjust the candle length above the block to 'b'.
4. Check the contact touch for all interrupters with six - lights. Screw only the candles down (max. 0.12) to bring all touches simultaneously within 0.12 of lift rod travel.

   NOTE

   The arcing tips may cause early touch and confuse the check.
5. Contact touch, as checked by lights, may be plotted as a touch line on the travel analyzer chart. The distance between this touch line and the fully closed line represents contact wipe and should be between 0.62 and 0.74 inch.

The electrical wipe of each phase of the breaker should now be recorded as an indication of the setting of the contacts. This will afford a quick check of the

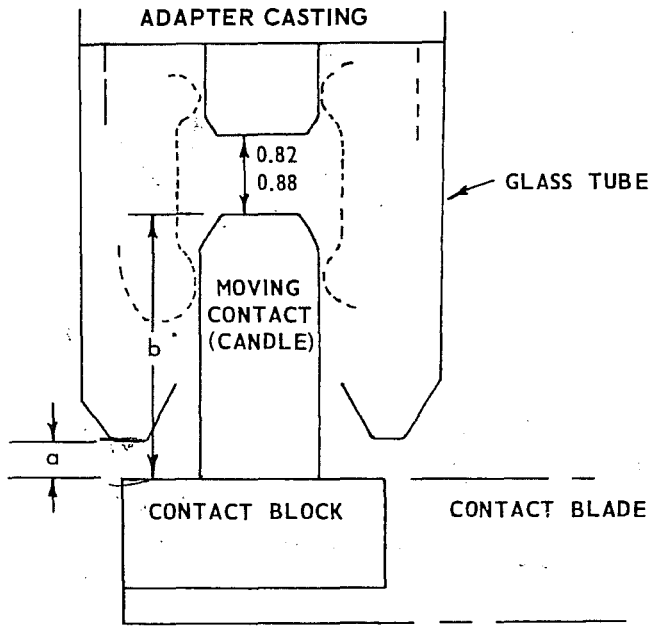

Figure 7 Glass Tube Interrupter

adjustment of the contacts without the necessity of dropping the tank at a future date. The bellset wipe is not an indication of the condition of the contacts. The bellset wipe does not equal the contact rod insertion into the contact fingers due to the curved portion of the contact rod and the curved portion of the contact fingers breaking contact while the contact rod is still inserted in the finger cluster.

To change the contact insertion, loosen the locknuts and rotate the contact rod (10, figure 8) in the appropriate direction. At the same time there should be at least 0.5 inch clearance between the bottom of the interrupter and the crossarm (11 or 12) with the breaker closed, so that overtravel will not damage the interrupter or contacts. Tighten the locknuts and recheck all the contact adjustments and alignment. With the breaker properly adjusted, the contacts of the three phases should make and break at approximately the same time, or within 0.26 inch of each other.

If ductor readings are to be made on the breaker, they should be checked before oil is placed in the tanks. A 100 ampere ductor should be used to measure the resistance of the contacts. Checking this way will eliminate the necessity of draining the oil should a high reading be found. A complete pole unit (bushing terminal to bushing terminal) should measure 400 microhms or less when new. The reading should not exceed 700 microhms after the breaker has been in service.

It is a good practice to check the bushing current transformers before placing oil in the tanks. If any damage has occurred in transit or installation it can be corrected with a minimum of lost time. This procedure also insures the removal of any grounding

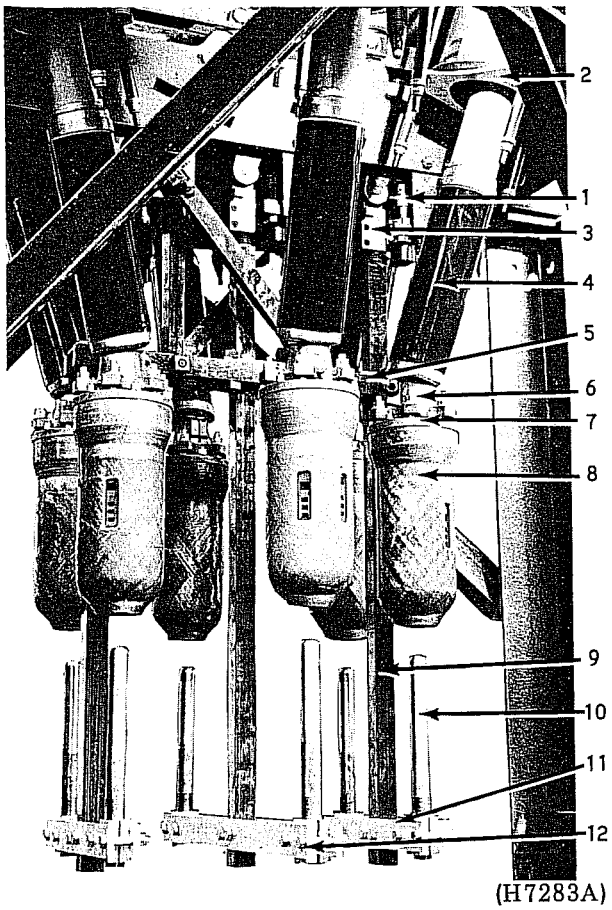

1. Opening Dashpot
2. Bushing Current Transformer Support Plate
3. Lift Rod Coupling
4. Bushing
5. Lift Rod Guide
6. Upper Adapter and Clamp
7. Lower Adapter
8. Interrupter
9. Lift Rod
10. Contact Rod
11. Crossbar
12. Crossbar

Figure 8 Breaker Unit

or shorting connections which may have been left on the BCT leads after the completion of factory tests and installation of the customer's permanent BCT circuitry.

STROKE

After the closed position adjustments of the breaker have been completed, it will be necessary to check the breaker in the open position.

The opening dashpots (11, figure 9) should be checked for proper oil level, and filled with GE #10-C oil if necessary. This check should be made with the piston up; that is, with the breaker in the partially closed position so that the lever (2) is not touching the piston. A small pipe plug is located at the oil level line. If the oil level is even with the bottom of this hole, the oil level is satisfactory and the breaker can be opened.

The stroke of the breaker, which is the total movement of the lift rod (10) from the fully closed to the fully open position, should measure 12 inches plus or minus 0.26 inches as specified on the outline drawing. The minimum stroke of the lift rod from the fully closed position during a reclose operation must not be less than 10 inches with the breaker contacts in GE #10-C oil. The dashpot should be the final stop of the breaker in the open position. The dashpots are threaded to permit adjustment for this purpose. Raising the dashpots shortens the stroke and lowering them lengthens it. When making adjustments, all dashpots should be made to operate at approximately the same time.

The normal oil level at 20 C is indicated on the outline drawing. A float type oil gauge is supplied. The range between minimum and maximum is represented by the visible portion of the gauge glass and covers a temperature range from plus 40 C to minus 30 C. The oil level at any intermediate temperature is represented by a proportionate part of the gauge range. It is important that the oil level never falls below the minimum level. This is selected so that the lower porcelain of the bushing will always be immersed and prevent corona discharge from the ground sleeve.

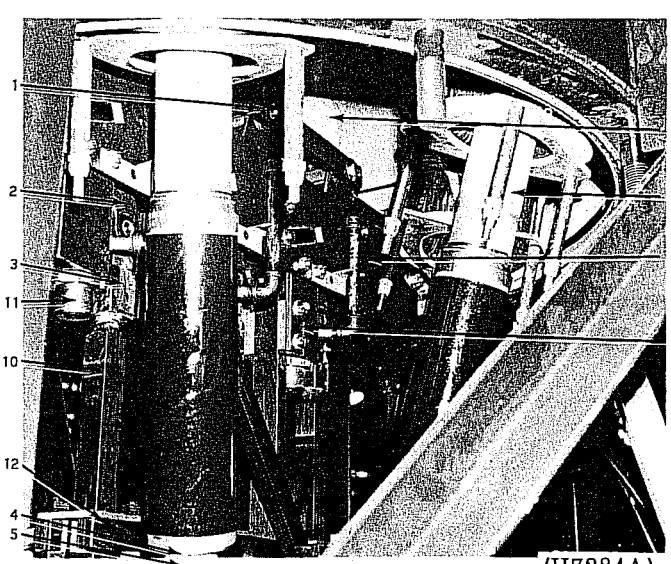

1. Connecting Link
2. Lever
3. Lift Rod Coupling
4. Upper Adapter and Clamp
5. Interrupter
6. Ground Sleeve of Bushing
7. Closing Buffer
8. Beam
9. Support for Opening Dashpot & Lift Rod Guide
10. Lift Rod
11. Opening Dashpot
12. Lift Rod Guide

Figure 9 Breaker Linkage

The breaker should not be energized for at least twelve hours after filling to permit air bubbles to escape from the oil due to the possibility of decreasing the dielectric strength of the oil.

OPERATING MECHANISM CHECK

Visual inspection of the mechanism should be made to see that all cotter pins are in place, all nuts and terminal connections tight, no binding present, and that the mechanism is properly lubricated in accordance with the mechanism instruction book.

SPEED ADJUSTMENT

After completing the preceding installation adjustments and inspection, and after filling the tank with oil, the breaker may be operated electrically to check the speed adjustment.

A travel analyzer should be attached to the breaker to obtain an accurate travel record of breaker performance. A #10-24 tapped hole is located in the top of the lift rod coupling, as indicated in figure 5, to accommodate the rod used with the travel analyzer. Access to this tapped hole is by removal of the breather (13, figure 5) which is screwed into the closing buffer assembly. The travel analyzer (2, figure 10) is readily mounted on brackets.

The opening speed is determined by drawing a straight line through two points on the travel curve (see figures 11 and 12). One point is to be located on the opening curve 1.12 inches from the fully closed position. This is the point at which the contacts part. The second point is to be located on the opening curve 6.12 inches (measured vertically) from the fully closed position. The slope of this line is an indication of the opening speed.

If it is found necessary to readjust the opening speed of the breaker, change the setting on the opening spring (22, figure 5). By setting this spring to have less compression in the closed position, the opening speed will be reduced. It also follows that by setting the spring to have more compression in the closed position, the opening speed will be increased. Any adjustment of the opening spring will change the adjustment of the contact stop clearance. After adjusting the opening spring, check the contact clearance. Readjust as necessary.

The average closing speed can be determined in a similar manner by drawing a straight line through two points located 1.12 inches and 2.12 inches from the fully closed position. The closing speed is controlled by the operating mechanism. There is no adjustment for the closing speed. For additional information, consult the mechanism instruction book paying particular attention to the section on INSTALLATION ADJUSTMENTS.

The overtravel of the lift rod must not exceed 0.26 inches. The best way to accurately measure this is to place some putty about 0.50 inches above the pencil head on the analyzer, with the breaker in the closed position. Trip and close the breaker. If the pencil head does not touch the putty, move the putty down, and repeat this operation until the pencil head just touches the putty during the closing operation. If the overtravel is found to exceed 0.26 inches, check the buffer setting.

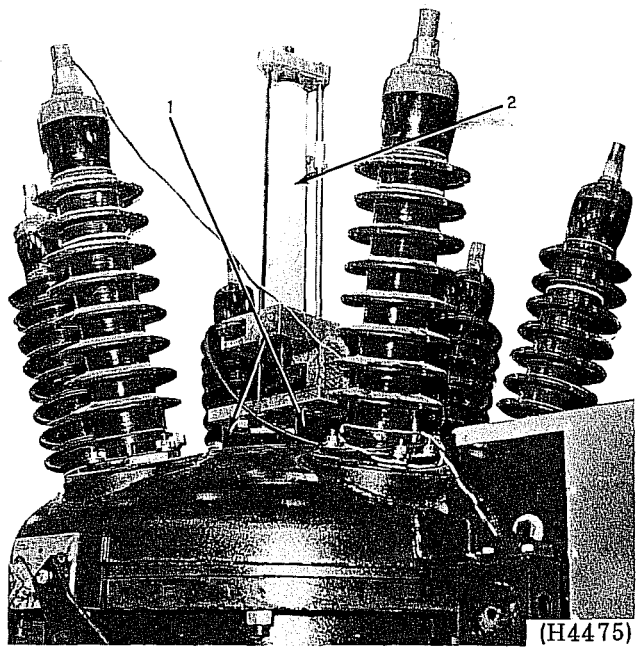

1. Analyzer Support Brackets
2. Straight Line Travel Analyzer

Figure 10 Installation of Travel Analyzer

When opening in oil, the breaker should open the full stroke. The travel curve will be acceptable if the indicated rebound is less than 0.62 inches. A slight variation between the three phases within the above tolerance is permissible.

SUMMARY OF ADJUSTMENTS AND CHECKS

Refer to figure 17 for physical location.

With the tank off:

A. The overtravel stop setting, which is used as an indication of the internal lift rod setting, should be 0.26 inches plus 0.015 inches minus 0 with the breaker in the closed position.

B. The toggle position, which is an indication of the toggle linkage, should be 0.88 inches plus or minus 0.04 inches in the breaker closed position.

C. Phase 1 and phase 3 lift rod settings are compared with the lift rod setting of phase 2 and must be within plus or minus 0.12 inches of the phase 2 lift rod setting in the breaker closed position.

D. Phase 2 lift rod setting should be 7.26 inches

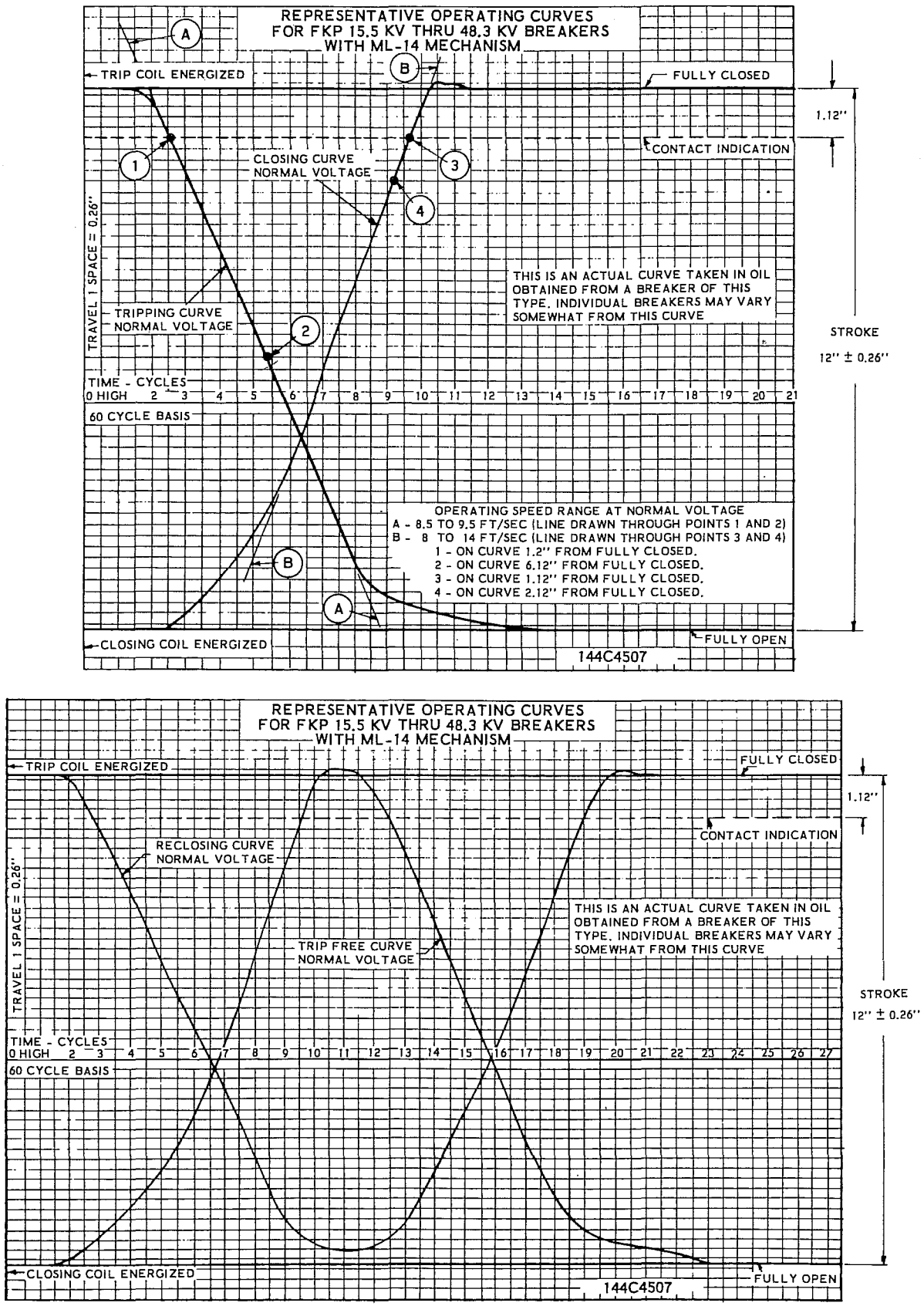

Figure 11 Representative Operating Curves with an ML-14 Operating Mechanism For FKP 15.5 KV thru 48.3 KV Breakers, Curves Taken in Oil

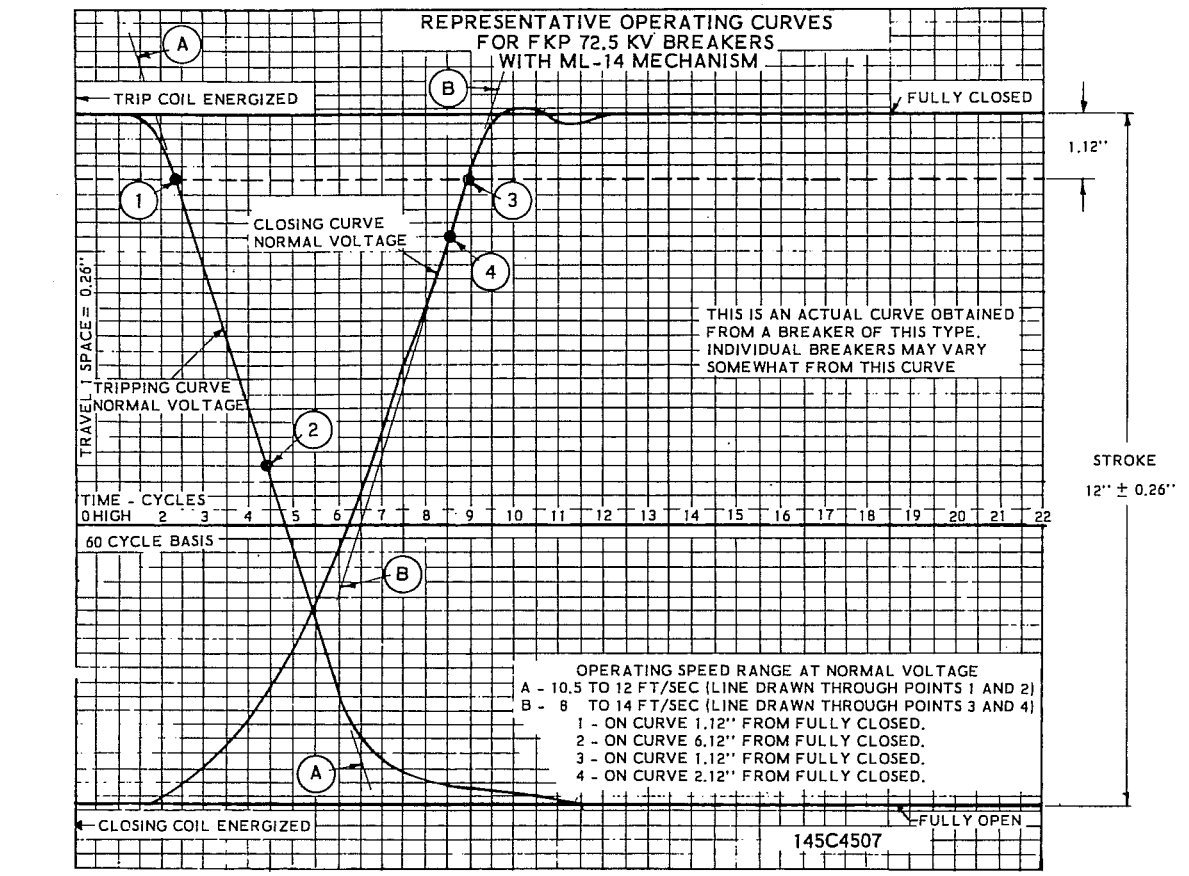

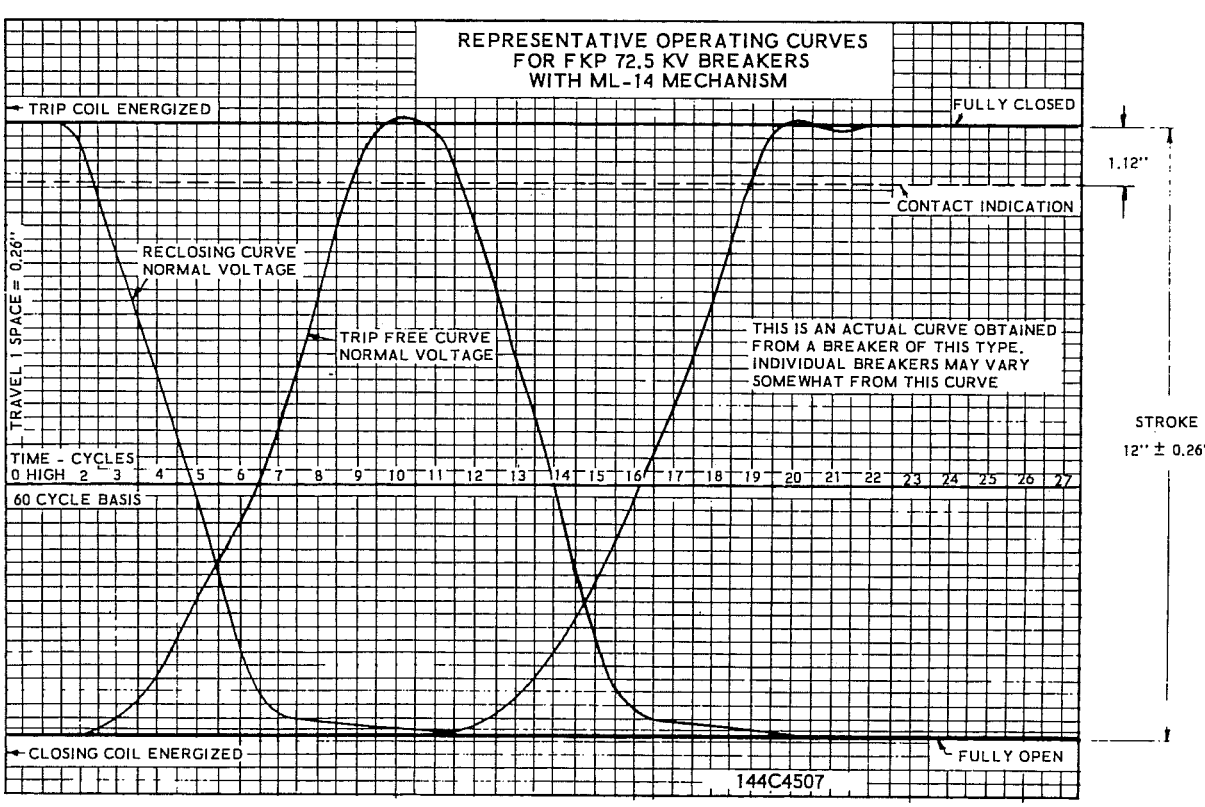

Figure 12 Representative Operating Curves with an ML-14 Operating Mechanism For FKP 72.5 KV Breakers, Curves Taken in Oil

TABLE OF ADJUSTMENTS

For Future reference, the initial adjustments and checks of the breaker at the time of installation should be written in the appropriate columns of the chart below.

		Phase 1	Phase 2	Phase 3
External Overtravel Stop Setting	0.26 inches + 0.015 inches -0			
Breaker Stroke	12 inches ± 0.26 inches			
Lift Rod Setting (Phase 2)	7.26 inches ± 0.12 inches			
Lift Rod Setting (Phase 1 and 3)	Phase 2 setting dimension ± 0.12 inches			
Lift Rod to Lever Pin Clearance (Minimum)	2.94 inches			
External Toggle Setting	0.88 inches ± 0.04 inches			
Preliminary Closing Buffer Setting	1.05 inches ± 0.04 inches			
Contact Penetration	1.12 inches ± 0.06 inches			
Contact Wipe (Electrical)	0.62 inches ± 0.12 inches			
Contact Stop Clearance	0.88 inches ± 0.06 inches			
Contact Resistance - (Using 100 Ampere Ductor) (All parts cold - 20°C)				
New Contacts - Microhms	250			
Used Contacts - Microhms (Maximum)	450			
Part Contacts in Any One Phase	Within 0.04 inch of each other			
Part Contacts Between Phases	Within 0.26 inch of each other			
Crossbar to Interrupter Minimum Clearance	0.5 inches			
Crossbar to Interrupter Nominal Clearance	0.94 inches			
Opening Spring Compressed Length - Not Less Than	6.62 inches			
Opening Spring Nominal Compressed Length	7.50 inches			

TABLE OF ADJUSTMENTS (Continued)

		Phase 1	Phase 2	Phase 3
Tripping Time (Maximum-Normal Voltage)	3.0 cycles			
Opening Speed from fully closed (1-1/8 inches to 6-1/8 inches) (14.4 through 46 KV Breakers)	10.5 to 12.0 feet per second			
Opening Speed from fully closed (1-1/8 inches to 6-1/8 inches) (69 KV Breakers)	10.5 to 12.0 feet per second			
Closing Speed from fully closed (1-1/8 inches to 2-1/8 inches) (14.4 through 69 KV Breakers)	8 to 14 feet per second			
Overtravel (Maximum) On Closing	0.26 inches			
Rebound (Maximum) On Opening	0.62 inches			
Rebound (Maximum) On Closing	0.38 inches			
Closing Time (Maximum)	20 cycles			
Closing Time (Nominal)	10 to 15 cycles			
Reclosing Time (Maximum)	20 cycles			
Minimum Dropout on Reclosing (in Oil)	10 inches			
Nominal Dropout on Reclosing (in Oil)	11 inches			
Lift Rod Clearance in guide block	0.015 inches			

Note: The opening spring cover (24, figure 5) must be in place before operating the breaker.

plus or minus 0.12 inches, in the breaker closed position.

E. The nominal opening spring compression is 1 inch for 14.4 through 34.5 KV breakers and 1.5 inches for 46 and 69 KV breakers. The compressed length of the opening spring should not be less than 6.62 inches.

F. The contact wipe, which is the insertion of the contact rod into the contact segments, is 1.12 inches plus or minus 0.06 inches.

G. The contact stop clearance should measure 0.88 inches plus or minus 0.06 inches.

H. The minimum clearance between the crossbar and the interrupter is 0.5 inches. The nominal clearance is 0.94 inches. This is measured in the breaker closed position.

J. The breaker stroke should be 12 inches plus or minus 0.26 inches.

K. The lift rod should hang in an approximately vertical position with a clearance of approximately 0.015 inches minimum between the guide block and the side of the rod in both directions.

L. The lift rod to lever pin clearance should be a minimum of 2.94 inches with the breaker closed. Measure on phase 3 only.

With the tank in place and filled with oil:

A. Contact opening speed, 8.5 to 9.5 feet per second for 14.4 through 46 KV breakers and 10.5 to 12 feet per second for 69 KV breakers.

B. Overtravel, 0.26 inches maximum.

C. Rebound, not more than 0.62 inches.

D. Contact closing speed, 8 to 14 feet per second for 14.4 through 69 KV breakers.

FINAL INSPECTION

1. See that the breaker is properly set up and leveled on its foundation.

2. See that all nuts, washers, bolts, cotter pins, lock rings, and terminal connections are in place and tightened. The gland nuts on all valves and oil gauges should be checked to see that they are sufficiently tight to prevent leakage. In tightening gland nuts, precautions should be taken to prevent damaging the packing through excessive pressure.

3. Inspect all insulated wiring to see that no damage has resulted during installation, and test for possible grounds or short circuits.

4. See that all bearing surfaces of the operating mechanism and breaker linkage have been lubricated.

5. Make certain that the dashpots are filled to the proper level.

6. Make certain that the tank is filled to the proper level.

7. Make certain that the installation adjustments and operating adjustments have been thoroughly checked.

8. See that all covers and bolted connections are securely tightened and that all pipe plugs for inspection openings are properly installed and tightened to prevent the entrance of moisture.

9. See that any point where the surface of the paint has been damaged during installation is repainted immediately.

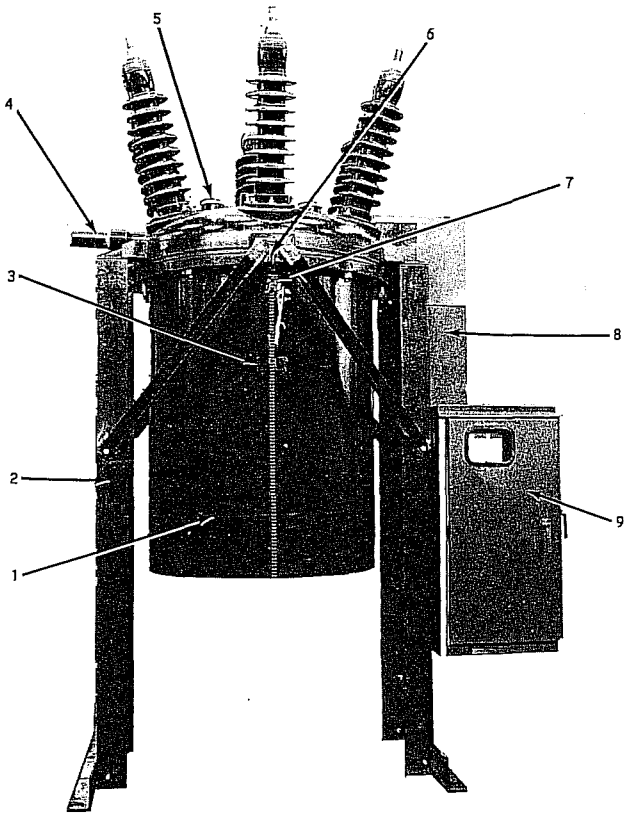

(H4476)

1. Breaker Oil Tank
2. Breaker Framework
3. Tank Lug
4. Opening Spring Cover
5. Closing Buffer
6. Tank Lifter Support Bracket
7. Tank Lifter
8. Vertical Operating Rod and BCT Lead Cover Box
9. Operating Mechanism House

Figure 13 Type FKP Breaker - Tank in Place

OPERATION

The mechanical operating mechanism provides the energy for all operations of the breaker. Control voltage and pressure ranges where applicable for proper operation are given on the operating mechanism nameplate.

These mechanisms are designed for rapid closing, opening, and trip-free operations and (when requested) reclosing operation. During the closing operation, the operating mechanism moves the vertical operating rod (2, figure 5) in a downward direction. This motion is transmitted through the breaker linkage to the vertical lift rods (16), closing the breaker.

The opening operation is the reverse of the closing operation.

When the breaker opens under load, the contacts part, drawing arcs between the tips of the contact rods and the arcing tips of the stationary contacts. The pressure generated by the arcs forces fresh oil past the arcing area, at the same time forcing the arcs between the baffles in the direction of the port openings, as shown in figure 3, carrying the arc products away from the contacts and out of the interrupter. Thus, rapidly lengthening and cooling the arc, its resistance is increased and at an early current zero the arc cannot re-establish itself, and interruption occurs.

MAINTENANCE

To maintain dependable service and safety of power equipment, it is recommended that a definite schedule be set up and followed, as serious shutdowns can be avoided by locating potential sources of trouble in an early stage. A periodic lubrication of parts subject to wear is also vitally important for the successful operation of the breaker and operating mechanism.

WARNING

BEFORE ANY MAINTENANCE WORK IS PERFORMED, MAKE CERTAIN THAT ALL CONTROL CIRCUITS ARE DE-ENERGIZED AND THAT THE BREAKER PRIMARY CIRCUITS ARE OPEN AND EFFECTIVELY GROUNDED. DO NOT WORK ON THE BREAKER OR MECHANISM WHILE IN THE CLOSED POSITION UNLESS THE PROP AND TRIP LATCH HAVE BEEN SECURELY WIRED OR BLOCKED TO PREVENT ACCIDENTAL TRIPPING.

PRECAUTIONS

1. Be sure the breaker is disconnected from all electric power, both high voltage and operating, before inspecting or repairing.

2. After the breaker has been disconnected from the power lines, grounding leads should be properly attached before coming in contact with any of the breaker parts.

3. Be sure the breaker tanks and frame are well grounded.

4. Use the maintenance closing device to assist in making adjustments. This is the primary purpose of the device because it permits slow closing.

5. After making any adjustments, operate the apparatus manually before attempting electrical operation.

PERIODIC INSPECTION

The frequency of periodic inspection should be determined by each operating company on the basis of the number of operations (including switching), the magnitude of currents interrupted, and any unusual operations which occasionally occur. Operating experience will soon establish a maintenance schedule which will give assurance of proper breaker condition. On installations where a combination of fault duty and repetitive operation is encountered, an inspection is recommended after any severe fault operation.

The contacts and baffles must be replaced after the breaker has interrupted a total of five times the rated interrupting current of the breaker. This is known as "integrated amperes" and is the sum of all currents, normal switching current as well as full rated fault current, interrupted by the breaker contacts.

1. The condition of the contacts should be checked. See that they are aligned, and that the contact surfaces bear with firm, uniform pressure.

2. The quality of the oil should be checked. Oil in service should be tested at frequent intervals; three month periods are recommended.

   If the dielectric strength of the oil tests less than 22,000 volts, it should be filtered.

   When sampling oil, the sample container should be a large-mouthed glass bottle. The bottle should be cleaned and dried with benzine and free from moisture before it is used. A dry cork stopper should be used. The sample of the oil should be at least one pint. Test samples should be taken only after the oil has settled for some time.

   Samples should be taken from the valve at the bottom of the tank and sufficient oil should first be drawn off to make sure the sample represents oil from the tank proper and not that stored in the drain pipe. A glass receptacle is desirable so that if water is present it may be readily observed. If water is found, an investigation of the cause should be made and a remedy applied. Excessive water is indicative of leakage somewhere in the breaker structure.

3. All insulation parts should be thoroughly cleaned to remove all traces of carbon which may remain after the oil has been drained from the tank. It is recommended that the oil be removed and the tank cleaned at regular intervals because filtering the oil alone does not remove the carbon which adheres to the inside of the tank.

4. The breaker linkage lubrication should be thoroughly checked. All bearing surfaces should be lubricated with BEACON 325.

5. The opening dashpot oil level should be checked. The opening dashpot level is correct when the oil will just run out of the hole left by removing the small pipe plug in the side of the cylinder. With the dashpot plunger in the up position, oil may be added at this point. The dashpots use GE #10-C breaker oil. The dashpots should be examined to see that the piston works freely and that there is no sludge present.

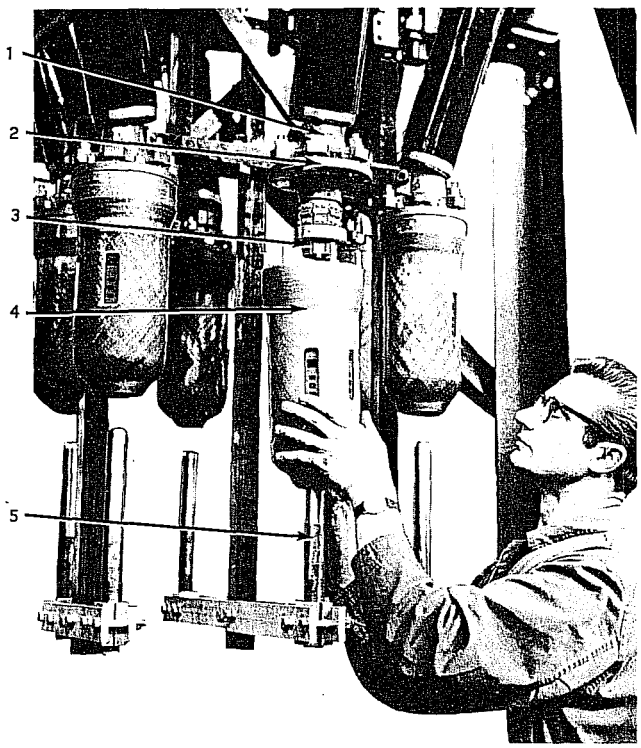

(H7282A)

1. Upper Adapter and Clamp
2. Lower Adapter
3. Stationary Contact Fingers
4. Interrupter Unit
5. Contact Rod

Figure 14 Lowering the Interrupter for Inspection

6. All bolts, nuts, washers, cotter pins, lock rings, and terminal connections should be in place and properly tightened. The gland nuts on the valve should be checked to see that they are sufficiently tight to prevent leakage. In tightening a gland nut, precautions should be taken to prevent damaging the packing through excessive pressure.

7. Inspect the bushing supports, as the vibration due to the operation of the breaker may cause the bushings to move slightly and result in misalignment of the contacts.

8. Clean the bushing porcelains at regular intervals, especially where abnormal conditions prevail, such as salt deposits, cement dust, or acid fumes, to avoid flashover as a result of accumulation of foreign substances on their surfaces.

   If a water solution under pressure is used to clean the bushing porcelains, care must be taken that the stream of solution is not directed at the breather (1, figure 6) located on top of the buffer housing. An excessive stream of solution directed up at the breather might permit some of the solution to enter the breather and damage the insulation. The breather may be removed and a pipe plug installed properly during a washing operation of this type. Make certain the breather is installed properly after the washing operation.

9. Check all adjustments of the breaker linkage and contacts as explained in the section INSTALLATION ADJUSTMENTS.

10. Consult the operating mechanism instruction book for maintenance recommendations on the operating mechanism.

11. See that the oil is at the proper level in the tank.

12. Check the electrical operation and speed adjustments as explained under INSTALLATION ADJUSTMENTS.

REPAIR AND REPLACEMENT

INTERRUPTER AND CONTACTS

With the oil tank removed, and the breaker in the open position, the interrupters can be lowered for inspection or repair by removing the six assembly nuts (6, figure 15) on the studs which pass through the lower adapter into the interrupter tube.

The contact finger assembly is now accessible and can be examined for excessive burning, pitting or wear. Since the adapter (7) has not been disturbed, the reassembly will not require a realignment of the interrupter. If it is necessary to change any contact fingers (16), first mark the position of the finger containing the extended arcing tip (17) on the contact stop (12). Remove the flexible connectors (11) from the fingers. This permits removal of the contact finger assembly.

Before contact fingers can be changed, the spring retaining ring (6, figure 18), which is mounted around them, must be removed. This ring can be pried loose with a screwdriver after removing the cotter pins. To change the arcing fingers and the current transfer fingers, special tools are used to compress all the contact springs at the same time. See figure 18 and proceed as follows using tool 216A7445G1.

1. Set the contact fingers (3 and 8) in the alignment block (4) with the contact ends down. The arcing contact fingers (3), having the Elkonite extension, will fit into the slot of the alignment block.

2. Place the spring guide (5) in position and insert the springs (7) through the holes in the guide into the retaining holes in the contact fingers.

3. Place the brass retaining rings (2 and 6) into the untapered end of the cylinder (1). These are identical rings, one being used as a spacer tool and the other as a part of the contact finger assembly.

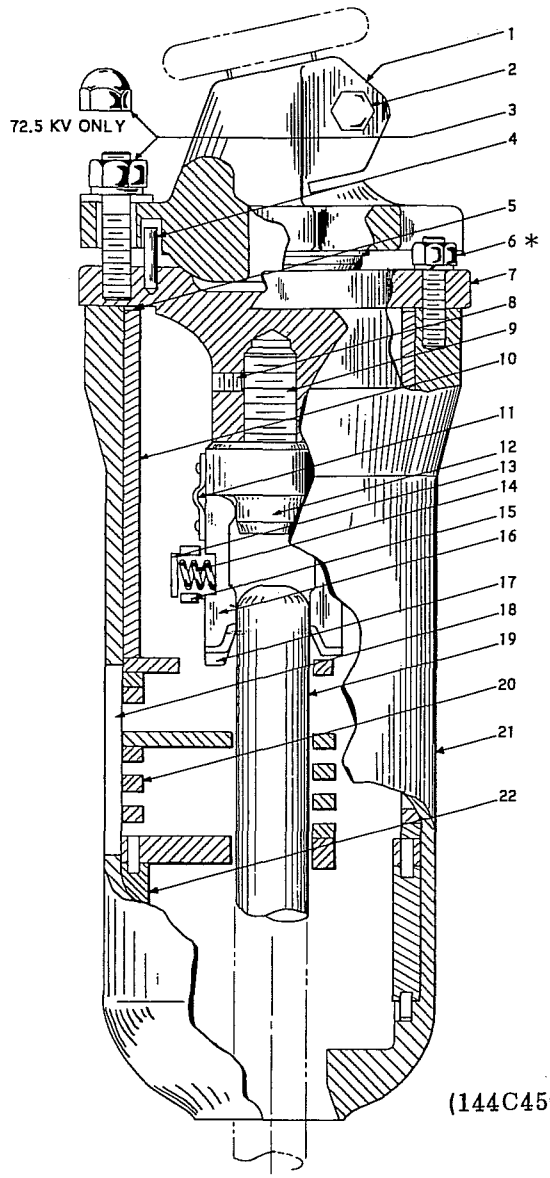

1. Upper Adapter
2. Adapter Locking Bolt
3. Locking Nut
4. Locating Pin
5. Insulating Shim
6. Assembly Nut
7. Lower Adapter
8. Set Screw
9. Contact Assembly Support
10. Upper Insulating Spacer
11. Flexible Connector
12. Contact Stop
13. Spring Retainer
14. Contact Spring
15. Spring Cage
16. Contact Finger
17. Arcing Tip
18. Exhaust Port Opening
19. Contact Rod
20. Baffle Stack
21. Interrupter Tube
22. Lower Insulating Spacer

* Torque to 200 to 250 in.-lb.

Figure 15 Standard Interrupter - Cross Section View

4. Place the cylinder, tapered end down, over the clustered fingers.

5. Turn the entire assembly upside down and press the entire length of the cylinder downward, as shown in figure 18.

6. Remove the cylinder, alignment block, and one retaining ring.

7. The assembly is now drilled and fastened with three cotter pins, spaced midway between fingers on the horizontal centerline of the retaining ring.

The contact assembly is now ready for installation in the interrupter. Using the alignment block (4) to insure equal pressure on all fingers, push the finger cluster onto the end of the mounting stud in the interrupter being certain the location of the arcing contact finger lines up with the mark which was put on the adapter.

If this tool is not available, a large hose clamp which utilizes the screw or worm type of tightener can be used to compress the spring a sufficient amount to force the spring (14, figure 15) into the spring retainer (13) by using a small screwdriver as a lever. The spring retainer must be clamped by the hose clamp at the same time as the springs are clamped by having the edge of the spring retainer just against the springs.

If further disassembly of the interrupter is required, the upper spacer (10), the baffle stack (20) and lower spacer (22) can be lifted out. When reassembling, make certain that the exhaust slots in the baffles (20) face the exhaust ports (18) of the body tube.

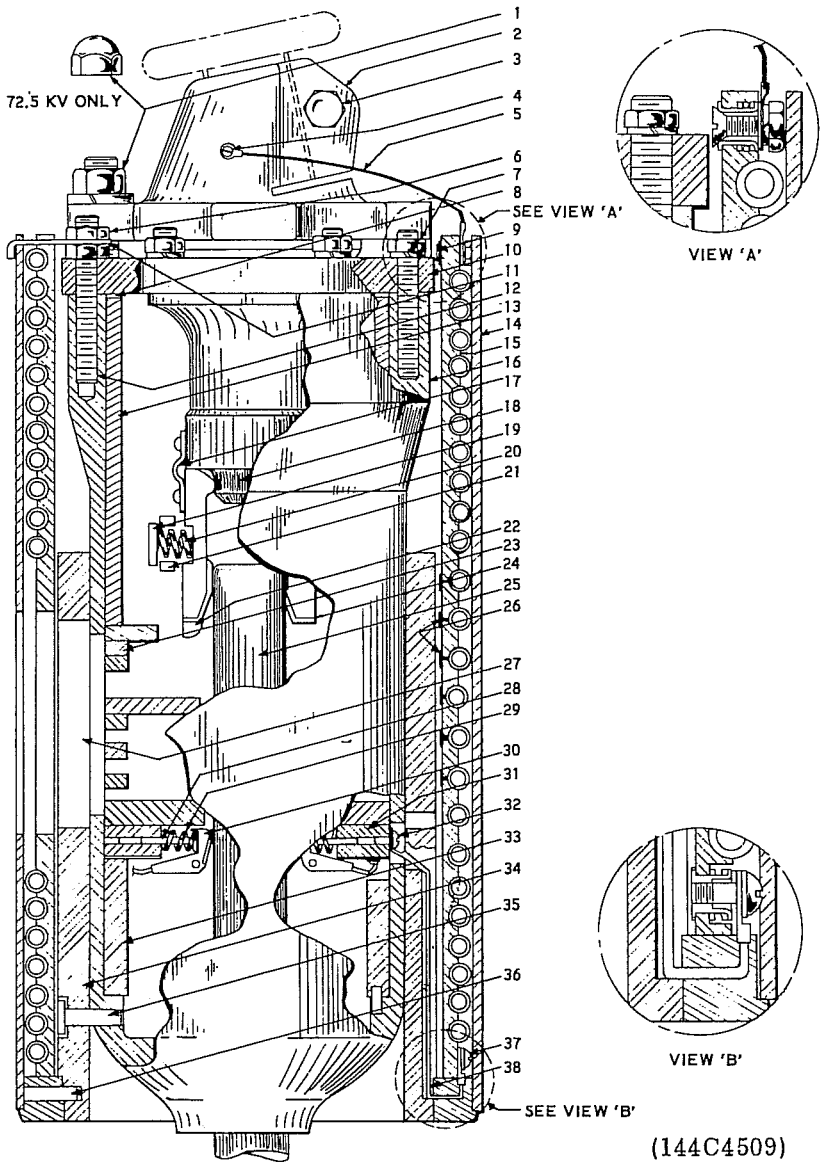

1. Adjusting Nut
2. Upper Adapter
3. Clamping Bolt
4. Resistor Lead Screw
5. Resistor Lead
6. Locking Nut
7. Assembly Nut
8. Insulating Shim
9. Resistor Terminal Screw
10. Lower Adapter

11. Locating Clip
12. Interrupter Stud
13. Upper Insulating Spacer
14. Resistor Cover
15. Resistor Support
16. Interrupter Tube
17. Flexible Connector
18. Contact Stop
19. Spring Retainer
20. Contact Spring

21. Contact Spring Cage
22. Arcing Tip
23. Baffle Stack
24. Contact Finger
25. Contact Rod
26. Cotter Pins
27. Exhaust Port Opening
28. Pin
29. Contact Finger Spring
30. Contact Finger

31. Resistor Finger Support
32. Resistor Lead Screw
33. Lower Insulating Spacer
34. Resistor Support Spacer
35. Spacer Pin
36. Resistor Support Pin
37. Resistor Terminal Screw
38. Resistor Lead

Figure 16 Capacitor Switching Interrupter - Cross Section View

When reassembling the interrupter, care must be taken that locating pins in the insulating spacers and baffles are properly installed in their respective locating holes. This will insure that the exhaust port of the baffle stack is located at the exhaust port opening of the interrupter tube.

The upper insulating spacer (10) should extend 0.015 inches to 0.06 inches above the interrupter tube (21). This protrusion makes certain that the baffle stack (20) and spacers (10 and 22) are held in place tightly when the interrupter is completely assembled. The 0.015 inch to 0.06 inch dimension is adjusted by the insulating shims (5). When the items which go into the interrupter tube are installed, put the interrupter in place on the lower adapter (7), making certain the arcing tip (17) lines up with the slot in the baffle.

After assembly, check to see if the baffle stack exhaust ports can be seen while looking into the interrupter through the exhaust port opening in the interrupter. If it can not be seen the interrupter is incorrectly assembled.

When remounting the interrupter and adapter to the bushing, a spirit level should be used to insure vertical alignment. Furthermore, upon completion of maintenance work it will be necessary to review all contact adjustments as explained in the section on INSTALLATION ADJUSTMENTS.

BUSHINGS

Little or no maintenance is required of the bushings other than a periodic cleaning of the porcelains. In locations where abnormal conditions prevail, such as

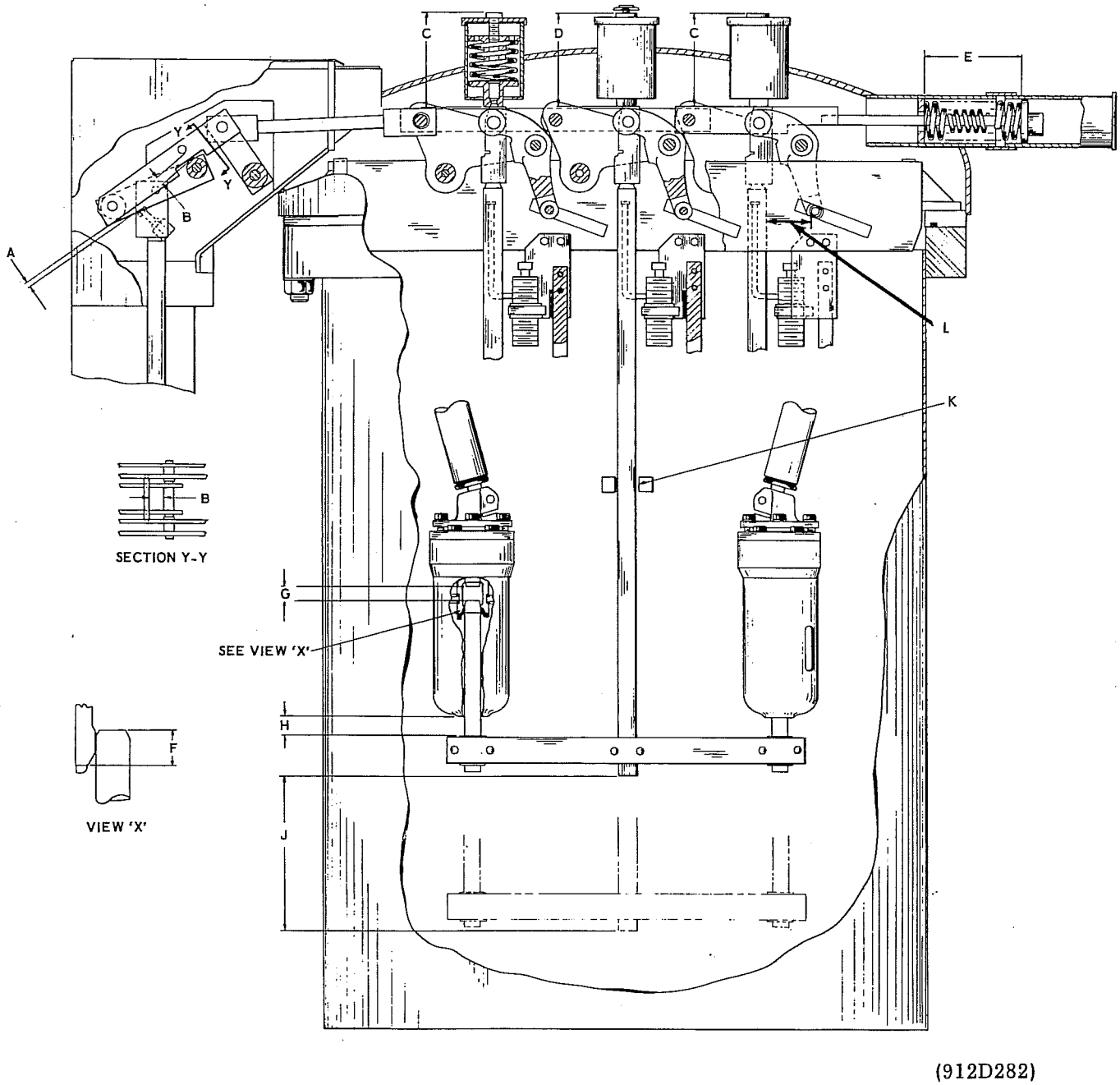

Figure 17 Breaker Adjustments and Check Points

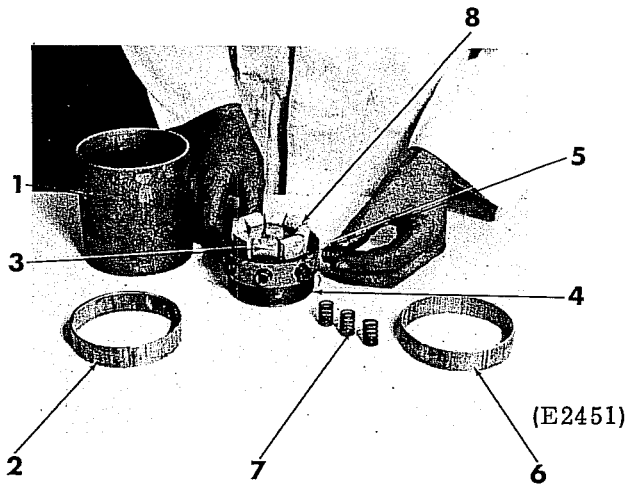

1. Tapered Cylinder
2. Retaining Ring
3. Arcing Contact Finger
4. Contact Alignment Block
5. Spring Guide
6. Retaining Ring
7. Contact Springs
8. Main Contact Fingers

Step 1

(E2450)

Step 2

(E2449)

Step 3

(E2448)

Step 4

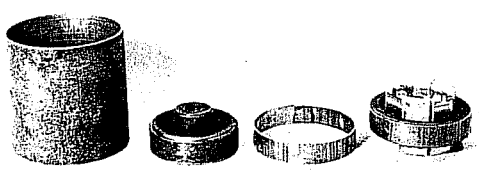

(E2452)

Step 5

Figure 18 Assembling Contact Fingers

salt deposits, cement dust, etc., it should be recognized that a special hazard exists and the bushings should be cleaned regularly to avoid accumulations on the external surfaces that might cause a flashover.

If removal of a bushing is required, it will first be necessary to remove the interrupter. The bushing can be removed and installed from the top of the breaker. When reinstalling the bushing, make certain that the gasket between the top frame and the mounting flange of the bushing is in good condition. The mounting bolts should be tightened gradually and evenly, and all interrupter adjustments should be checked.

BUSHING CURRENT TRANSFORMERS

Transformers should be connected in accordance with instructions 296 to be sure of proper polarity and correct connections. If it should be necessary to replace a transformer, care must be taken to see that the end of the transformer carrying a white mark is placed upwards.

Bushing current transformers are mounted in the top frame, as shown in figure 2. To remove the bushing current transformer, first disconnect the transformer lead wires. Loosen the adapter clamp (6, figure 8) and remove the interrupter unit. Remove the three assembly nuts (8, figure 1) permitting the supporting plate (7) and the current transformer (4) to be lowered.

Bushing current transformers may be installed either before or after the bushings are in place. Insulation washers above and below the transformer protect it from injury. It must be properly centered to prevent it from becoming damaged when the bushing is installed.

RENEWAL PARTS

It is recommended that sufficient renewal parts be carried in stock to enable prompt replacement of worn, damaged or broken parts. A stock of such parts minimizes the service interruptions caused by breakdowns, and saves time and expense. When continuous operation is a primary consideration, more renewal parts should be carried, the amount depending upon the severity of the service and the time required to secure replacements.

Renewal parts may not always be identical to the original parts, since improvements are made from time to time. The parts which are furnished, however, will be interchangeable.

When ordering renewal parts, address the nearest Sales Office of Canadian General Electric Company Limited giving the complete data shown on the breaker nameplate, such as the serial number, type and rating of the breaker. The breaker nameplate is mounted on the outside of the front door of the operating mechanism compartment. Also furnish a complete description of each part, the quantity required, and, if possible, the number of the requisition on which the breaker was originally furnished.

OIL-BLAST CIRCUIT BREAKERS

FKP 15.5-8,900 FKP 15.5-18,000 FKP 25.8-11,000

WITH ML-10 MECHANISM

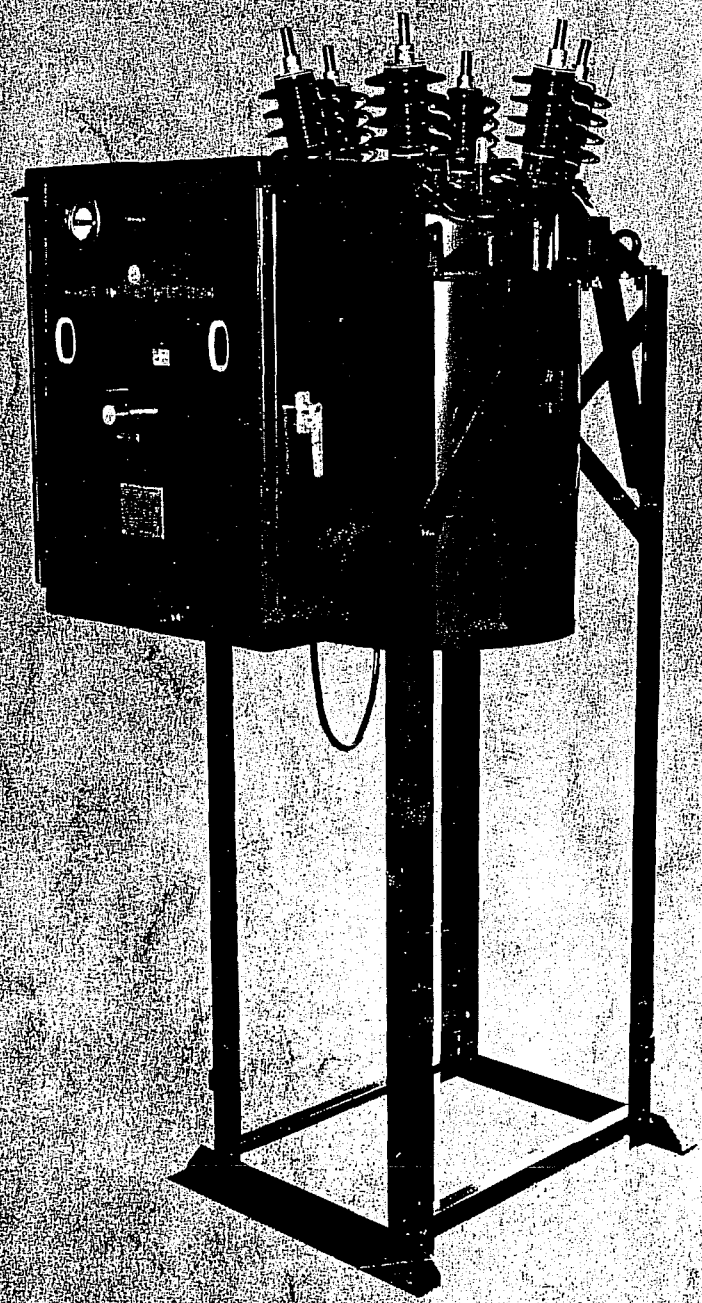

These instructions do not purport to cover all details or variations in equipment nor to provide for every possible contingency to be met in connection with installation, operation or maintenance. Should further information be desired or should particular problems arise which are not covered sufficiently for the purchaser's purposes, the matter should be referred to the nearest office of Canadian General Electric Company Limited.

TABLE OF CONTENTS

PART	TITLE	PAGE
1	HANDLING AND STORAGE	
	RECEIVING INSPECTION	1
	STORAGE	1
	UNPACKING AND HANDLING	1
2	DESCRIPTION	
	GENERAL	2
	BUSHINGS	2
	BUSHING CURRENT TRANSFORMERS	2
	TANKLIFTER	4
	SPECIAL TOOLS	4
3	INSTALLATION	
	GENERAL	5
	LOCATION	5
	MOUNTING	5
	CONNECTIONS	5
	Primary Connections	5
	Control and Secondary Wiring	5
	Ground Connections	6
	ADJUSTMENTS	6
	Breaker	6
	Mechanism	8
	Charging and Discharging the Spring	8
	OIL	11
	Filling the Tank	11
	Testing the Oil	11
	Tank Heaters	11
	SUMMARY OF ADJUSTMENTS	11
	BUSHINGS	13
	Bushing Current Transformers	13
	FINAL INSPECTION	13
4	OPERATION	
	SPRING OPERATED MECHANISM	14
	Closing	14
	Recharging the Spring	14
	Tripping	14
	Trip-free Operation	14
	Reclosing	15
	Anti-pump	15
	BREAKER LINKAGE AND INTERRUPTERS	16
	Closing	16
	Tripping	16
	SPEED MEASUREMENT	16
5	MAINTENANCE	
	GENERAL	16
	PRECAUTIONS	17

TABLE OF CONTENTS (Cont'd)

PART	TITLE	PAGE
5 (cont'd)	PERIODIC INSPECTION	17
	Current Transformers	17
	Interrupters	18
	Gaskets	21
6	RENEWAL PARTS	23

INTRODUCTION

The type FKP-15.5 oil-blast circuit breaker is a triple pole outdoor breaker designed for service at a normal circuit voltage of 14,400 volts, in current ratings of 600 or 1200 amperes and with interrupting ratings up to 18,000 amperes, as indicated on the breaker nameplate. The FKP-25.8 oil-blast circuit breaker is a similar type designed for service at a normal circuit voltage of 23,000 volts, in current ratings of 600 or 1200 amperes and with interrupting ratings up to 11,000 amperes, as indicated on its nameplate.

These breakers are of the most modern design, incorporating the oil-blast principle of arc interruption. The fast breaker interrupting time means less system disturbance because of quicker clearing of the fault. The short arc lengths mean lower maintenance because of reduced contact burning and deterioration.

An oil circuit breaker is a very important unit in the modern transmission system, being depended upon for protection and flexibility of control. It should not be installed in places where it will be called upon to operate at voltages or currents greater than those given on the nameplate. The short circuit conditions to be imposed on the breaker must not exceed the breaker rating.

Proper installation and maintenance are necessary to insure continued satisfactory operation of the breaker. USA Standard C37.010 and the NEMA Switchgear Standards SG-4 published by the National Electrical Manufacturer's Association, in addition to these instructions, are recommended for reference on the installation and care of oil circuit breakers.

PART 1

HANDLING AND STORAGE

RECEIVING INSPECTION

Each shipment should be visually inspected upon arrival. Any evidence of damage should be reported promptly to the carrier and to the nearest office of Canadian General Electric Company Limited.

STORAGE

All breakers are assembled and tested at the factory. They are shipped assembled in as complete a fashion as handling and transportation facilities will permit. Each breaker is carefully inspected and packed by workmen experienced in the proper handling and packing of electrical equipment. Immediately upon receipt of a breaker, an examination should be made for any damage sustained during shipment. If injury or rough handling is evident, a damage claim should be filed at once with the transportation company, and the nearest Canadian General Electric Sales Office notified promptly.

Use a nail puller to open crates. Exercise caution when unpacking to ensure that neither crates nor bushings are struck by tools.

Check all parts against the packing list as they are unpacked and identified. The crate in which the packing list is enclosed is noted on the memorandum of shipping. When unpacking, check the packing material for loose hardware. Parts which have been removed from the breaker for shipment are identified with the serial number of the breaker and must be installed on the correct breaker.

All breakers are assembled and tested at the factory. In most cases, bushings, interrupters, current transformers, breaker mechanisms and moving contact members are shipped in place.

The total weight of the breaker with oil is given on the outline drawing and on the nameplate. This information will serve as a guide to the strength of the lifting means required for handling the breaker. It may be lifted by hooking into the framework. When cable slings are used, the slings must not strike the bushings, as any undue strain may cause them to crack or break. For detailed information on the handling of bushings, refer to GGEI 769, obtainable from any sales office of Canadian General Electric Company Limited.

UNPACKING AND HANDLING

When the breaker can be set up immediately in its permanent location and filled with oil, it is advisable to do so, even if it will not be placed in service for some time. The oil tank should be cleaned and dried before it is filled with oil. If the tank must be stored in some location other than the permanent one, the tank should be filled with oil to protect the lift rods and guides.

The interrupters, if removed, should be stored in a dry room. If they must be left outdoors for a short time, they should be thoroughly covered to protect them from the weather. Under extreme conditions of humidity, or if the only indoor storage space is damp, they should be kept in containers filled with GE No. 10C oil.

Renewal parts, especially lift rods, guides, and other parts made of insulating material, which may accompany the breaker shipment, should be stored in a dry room.

The space heater in the operating mechanism housing should be energized as soon as possible in order to prevent corrosion due to moisture condensation inside the housing.

CAUTION

Do not energize the tank heaters until the tanks have been filled with oil.

For instruction on bushing storage see Instruction Book GGEI 769.

PART 2

DESCRIPTION

GENERAL

The FKP oil blast circuit breaker is shown on the front cover and consists of a three pole breaker unit and an operating mechanism. The three pole breaker unit (see figure 1) consists of three single pole units mounted in a common dome and connected through an operating linkage to the mechanism.

Oil blast interrupters are mounted on the lower ends of the oil-filled bushings and contain the stationary contacts. The breaker linkage carries insulated operating rods which carry the moving contacts. The contacts meet inside the interrupting chamber. The contacts open and close (essentially) simultaneously. When the contacts open inside the interrupters, which are under oil, circuit interruption occurs.

The trip-free operating mechanism is a motor-charged, spring-operated device. The action of a closing cam driven by a torsion spring causes closing of the breaker contacts. In closing, energy is stored in compression springs. Release of this energy by operation of the mechanism trip latch causes opening of the breaker contacts.

A float type oil gauge is installed in the top of the dome. This indicates the oil level indirectly through the action of a float, the position of which corresponds to the true oil level. The float is fastened to a red pointer rod which is visible in a tube on the top of the breaker. The correct oil level at normal temperature (20 C), as indicated on the breaker outline drawing, is 1-3/16 inches above the bottom of the visible portion of the gauge glass. This corresponds to the amount of oil necessary to keep the portion of the bushing below the ground sleeve immersed in oil.

The tank is held by eight studs against the top frame and a rubber gasket located in a groove on the underside of the top frame. The bolts must be tight to prevent oil leakage around the tank gasket during circuit interruption. This arrangement permits easy removal of the tank for maintenance of the contacts. A drain valve is attached to the drain pipe at the bottom of the tank so that all the oil may be drained. The valve should be plugged when not in use to prevent any possible leakage.

BUSHINGS

The bushings (see figure 2) are of the oil-filled, center clamped design. The bushing is made with *Herkolite insulation around the bushing core. The ground sleeve and flange are pressed on to the *Herkolite. The bushings are completely sealed with gaskets under pressure of a spring washer at the top of the porcelain. This construction lends itself to easy assembly and disassembly. The porcelain at the top of the bushing is under an axial compressive load which is sufficient to allow some cantilever loading of the bushing. The construction of the bushing flange provides a swivel joint to aid in alignment. A rubber "O" ring seal is provided between the bushing mounting flange and the dome.

BUSHING CURRENT TRANSFORMERS

Bushing current transformers, Type BR are used on these breakers to provide a source of current supply for operating breaker trip coils and protective relays. Relaying transformers are of the multi-ratio type having leads which provide a wide range of ratios. Ratio and accuracy classification for standard transformers are in accordance with NEMA SG-4 specifications.

High accuracy single tap metering type current transformers can also be furnished. These have compensation applied for specified loadings and cannot be used on other loadings without affecting their accuracy. Ratio and accuracy classification for standard transformers of this type are also in accordance with NEMA SG-4 specifications.

Performance data in the form of ratio curves is available for standard transformers of standard ratios. These are supplied with the order or can be secured from the Industrial Apparatus Department by giving the proper references.

Bushing current transformers are mounted inside the top frame. They are installed from underneath the top frame and they can be slipped over the lower end of the bushing, although the interrupters must be removed first. A supporting ring bolted to the top frame holds the transformer in place. Insulation washers above and below the transformer protect it from injury. It must be properly centered in the housing to prevent damage when the bushing is installed.

Leads from each transformer are carried on the inside of the top frame to the operating mechanism housing. These pass through a hole in the back plate of the housing and through an oil seal inside the housing.

*Registered Trade Mark of General Electric Company

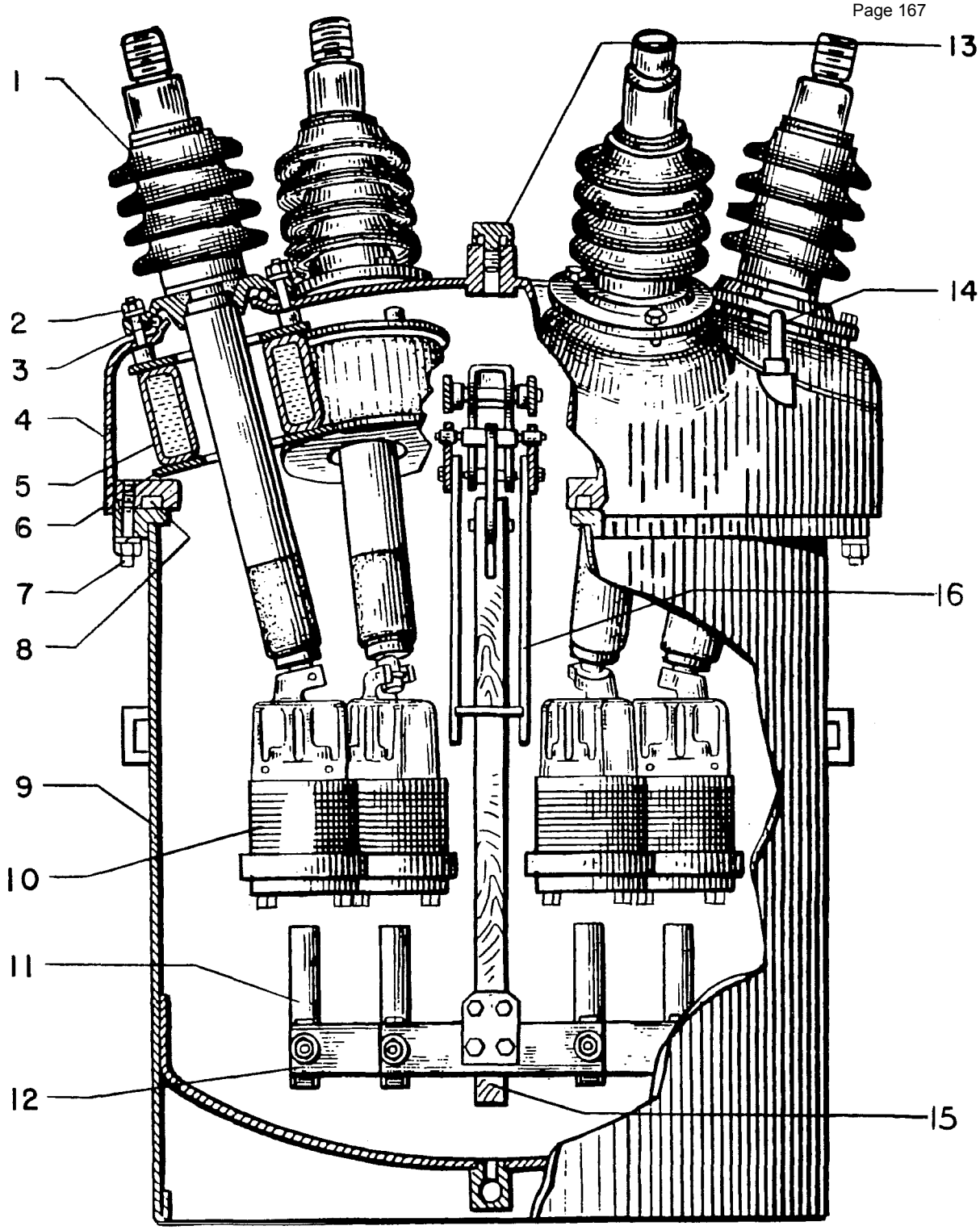

1. Bushing
2. Assembly Nut
3. "O" Ring Gasket
4. Dome
5. Bushing Current Transformer
6. B.C.T. Support Plate
7. Tank Nut
8. Tank Gasket
9. Tank
10. Interrupter
11. Contact Rod
12. Crossarm
13. Cap
14. Oil Gauge
15. Lift Rod
16. Lift Rod Guide

Figure 1 Breaker Unit

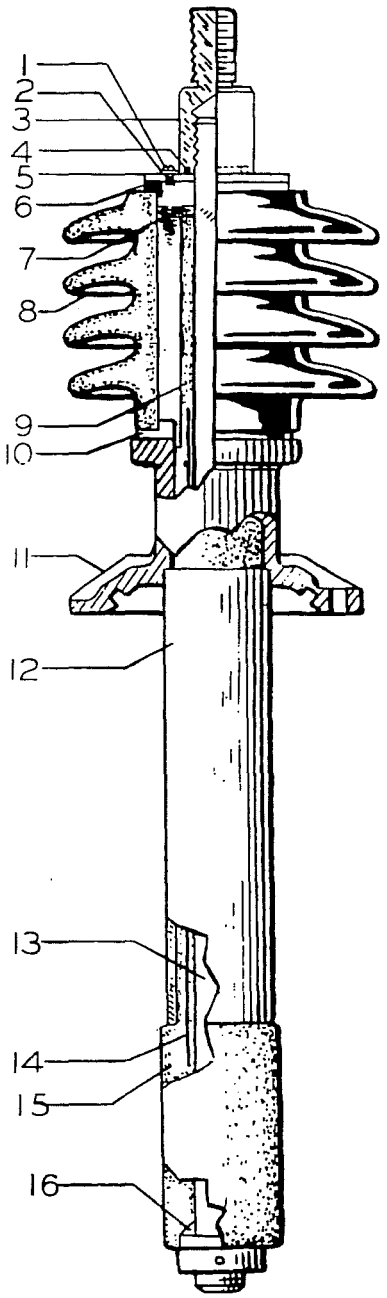

1. Oil Fill Screw
2. Gasket
3. Cap
4. Gasket
5. Belleville Washer
6. Gasket
7. Oil Level
8. Porcelain
9. Oil
10. Gasket
11. Support
12. Ground Sleeve
13. Stud
14. Equalizer
15. Herkolite* Insulation
16. Gasket

Figure 2 Oil Filled Bushing

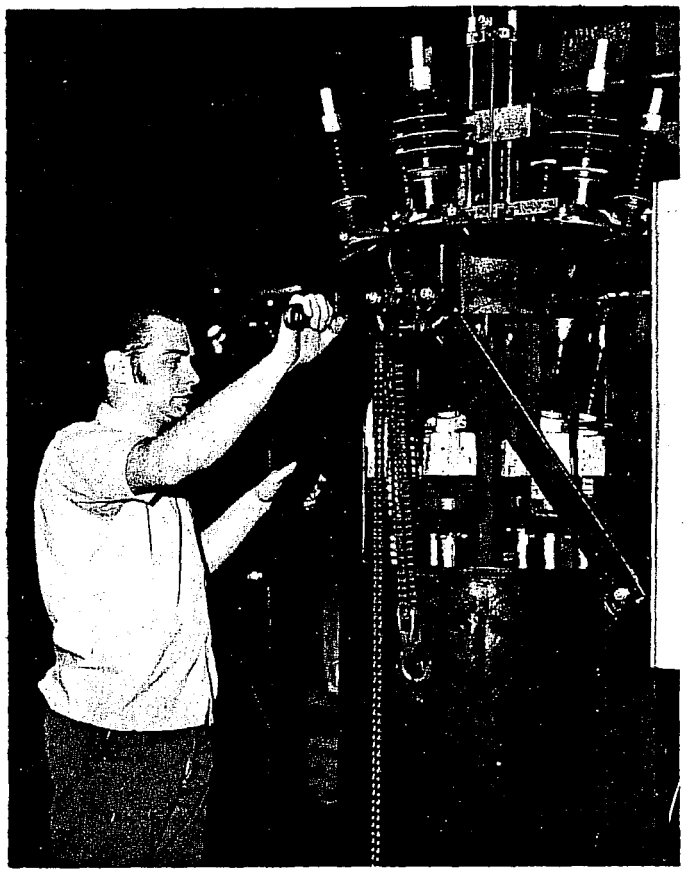

Figure 3 Tank Lifter

TANKLIFTER

The hand operated tanklifter for these breakers consists of two portable hoists of either the chain or cable type. They are hooked into slots in opposite sides of the breaker frame. The operation of the tanklifters is shown in figure 3. The hoists being light and portable are easily carried by the maintenance crew.

SPECIAL TOOLS

A maintenance closing bolt which may be inserted in the front of the mechanism coupling, through the small access hole in the front sheet of the mechanism housing, is available.

A "T" wrench which may be used to manually wind the main spring is available.

These tools are normally furnished on the basis of one set for each breaker. The tools, when furnished, can be stored in the bottom of the mechanism house.

PART 3

INSTALLATION

GENERAL

The installation of the breaker will be facilitated by a study of these instructions and a review of the approved drawings which supplement these instructions. The drawings show the general arrangement, dimensions, location of foundation bolts, provisions for conduit connections, electrical connections and other information necessary for the proper installation of the breaker. The approved drawings include the requisition summary, outline of the breaker with its operating mechanism and housing, and the connection diagrams. The breakers are shipped in the closed position. The manual trip linkage and the manual closing release handle are wired to prevent accidental operation. These wires must be removed before operating the breaker.

This mechanism is designed only for electrical operation. Mechanical interlocks prevent closing the breaker if there is too little spring force available or inserting the maintenance bolt without tripping the latch.

CAUTION

Never attempt to close the breaker under load with the maintenance closing bolt. Under emergency conditions the breaker may be closed against load by manually operating the closing release device after the spring has been charged.

LOCATION

The breaker should be located so that it will be readily accessible for cleaning and inspection. Sufficient space must be provided for the operation of the maintenance closing device and tanklifter and for easy removal of the oil tank. Where flood conditions exist, the mechanism housing should be above high water level.

MOUNTING

The total weight of the breaker with oil is given on the outline drawing and on the nameplate. This information will serve as a guide to the strength of the lifting means required for handling the breaker. It may be lifted by hooking into the holes in the ears at the top of the breaker framework. Do not allow cable slings to stroke the bushings as any strain may cause them to crack or break.

As the breakers are shipped assembled on their frameworks, it is only necessary to correctly locate and fasten the frame in position on its foundation (after attaching the framework extension, if used). Bolts of 3/4 inch diameter are recommended for foundation bolts. The foundation bolts should be left loose to permit the frame to be properly plumbed and leveled by inserting shims under the feet of the frame where necessary. After this has been done, the foundation bolts should be tightened and the frame fastened securely to its foundation.

CONNECTIONS

After the breaker has been located, electrical connections can be made. Before making these, every precaution must be taken to see that all leads to be connected to the breaker are not energized.

PRIMARY CONNECTIONS

Leads should be brought down from above if possible. Ample electrical clearance must be provided between these leads and parts of the station, such as walls, channels and framework. Leads should be properly supported so that the breaker bushings are not subjected to unnecessary strains. To avoid overheating, the connecting leads must be of a current-carrying capacity at least equal to the maximum operating current of the circuit which should not exceed the breaker rating.

Connections to the breaker are made by bolted connectors fastened to the ends of the bushings. The bolts on the terminal connectors must be securely tightened to obtain good contact. All joints must be clean, bright and free from dents or burrs.

CONTROL AND SECONDARY WIRING

All control wires should be run in conduit insofar as it is practicable. Control wires must be run separately and remote from high tension leads. Control wiring of adequate size should be used so that with full operating current flowing to the operating mechanism, the voltage across the terminals of the mechanism will be within the limits specified as standard for the range of control voltage. It is recommended that all conduits entering the mechanism housing be sealed off at their entrance to the housing.

Control and bushing current transformer connections are made inside the operating mechanism housing where suitable terminal boards are provided. Connection diagrams are supplied for each breaker showing the proper connections for the operating

mechanism and the bushing current transformers. All bushing current transformer terminal boards are shipped shorted and grounded. These connections should be changed upon setting the bushing current transformer ratio.

GROUND CONNECTIONS

The framework of each breaker should be permanently grounded. The usual practice is to connect a heavy cable between the framework and the station ground. A bolted connector is provided on a leg of the framework to which this cable can be attached. The cable should be able to carry 25 per cent of the current rating of the breaker but should not be smaller than #4/0.

WARNING

A GOOD, PERMANENT, LOW RESISTANCE GROUND IS ESSENTIAL FOR ADEQUATE PROTECTION. A POOR GROUND MAY BE WORSE THAN NO GROUND AT ALL, SINCE IT GIVES A FALSE FEELING OF SAFETY TO THOSE WORKING AROUND THE EQUIPMENT AND MAY RESULT IN ULTIMATE LOSS OF LIFE OR DAMAGE TO THE APPARATUS.

ADJUSTMENTS

BREAKER

Although the breaker has been set up, adjusted and tested at the factory, it is advisable to review all adjustments to see that no change has occurred during shipment and installation. Manual operation should be used for all preliminary inspections. The breaker should be slowly operated by hand (maintenance bolt) to see that it moves smoothly throughout the closing and opening of the breaker, that no binding occurs, and that no excessive play is noticeable between parts. The opening dashpot in the mechanism is self-contained so that the breaker may be operated electrically in air. Electrical operation should only be attempted after it is certain that all adjustments are made correctly. Details of these adjustments are given in the following paragraphs.

The breaker is shipped in the closed position with the main spring partly discharged. Any maintenance closing may be done with the maintenance closing bolt which is described below.

Slow Closing

The breaker may be closed slowly by means of the maintenance device. This is a jacking bolt which screws into the front of the breaker operating rod coupling (3, figure 4) and pulls the operating rod forward toward the closed position. The bolt should be well greased to reduce its resistance to turning. Since the bolt pulls directly on the operating rod, the trip latch is ineffective to trip the breaker.

In jacking from the open to the closed position, the cam follower roller (14, figure 4) must pass around the nose to the top of the cam. Normally, this action is blocked by the trip latch, however, introduction of the maintenance bolt with the breaker open causes rotation of the trip latch during most of the closing stroke. Near the closed position, the trip latch is released by the interlock, but held by the mechanism linkage until the closed position is reached. The breaker may be left in the closed position and the maintenance bolt withdrawn and, conversely, the maintenance bolt may be inserted with the breaker in the closed position without tripping the breaker. The breaker may be opened slowly by operating the manual trip and then unscrewing the maintenance bolt.

The closed position is established by proceeding forward until the trip latch drops in place and then backing off until the load of the interrupters is taken by the mechanism linkage. The maintenance bolt has a 3/4-10 thread. The torque required to raise the contacts to the point of meeting is small, but the torque required to complete closing is about 50 ft-lbs.

The breaker may be checked for correct adjustment by first establishing that the linkage is in the correct relation to the other parts. The linkage reference dimension (breaker closed) is 3-5/16 inches plus or minus 1/8 inch, measured from the top of the coupling in the center phase to the top of the lip of the boss in the center of the dome. This measurement is not of a critical dimension.

The stroke of the breaker contacts is 5 inches plus or minus 1/8 inch no load. The open position is determined by equalling the weight of the contacts and the force of the slightly compressed opening springs with a relatively high gradient balancing spring (15, figure 4) located around the breaker operating rod in the mechanism. In the open position, the balancing spring is compressed approximately 1/4 inch and the opening springs are compressed to 5-1/4 inches. This corresponds to 1-1/8 inches from the outside of the spring washer to the end of the housing. Adjustment of either the balancing spring or the opening spring will affect the stroke and the other spring, the balancing spring moving about one third of the change of the opening spring.

Alignment

The alignment of the interrupters and contact rods is made by rocking the bushings and interrupter about the ball joint under the bushing flange. The contact rod should enter the interrupter centrally and should not bind throughout its stroke. Be sure that the bushing flange nuts are equally tight after adjustment has been made.

A slight horizontal adjustment has been provided at the lower end of the contact rod by using a larger hole in the rod at the point where it attaches to the crossarm.

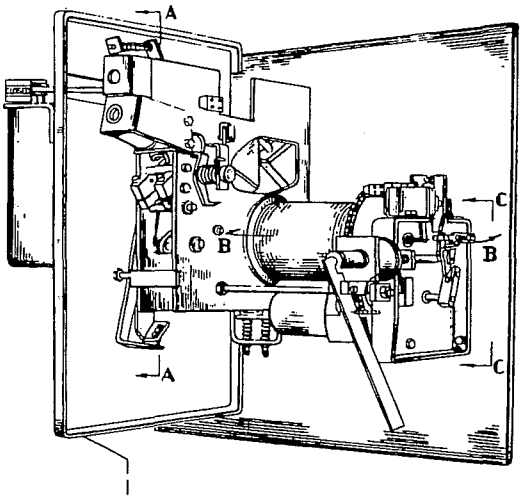

FRONT OBLIQUE VIEW

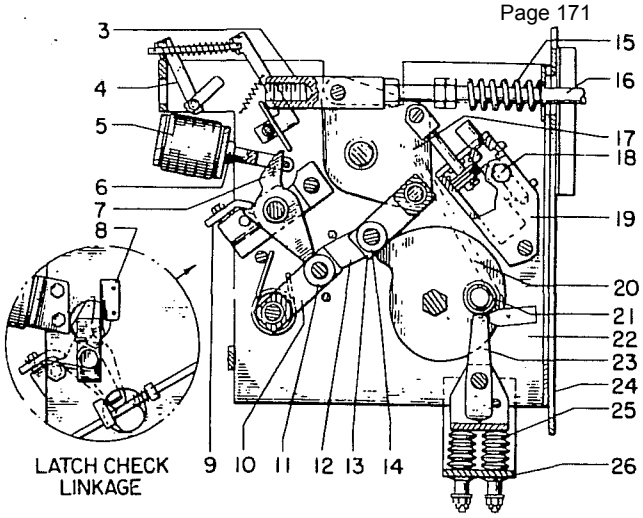

SECTION A-A (BKR. CLOSED)

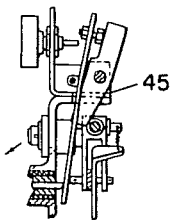

PRECHARGED POSITION

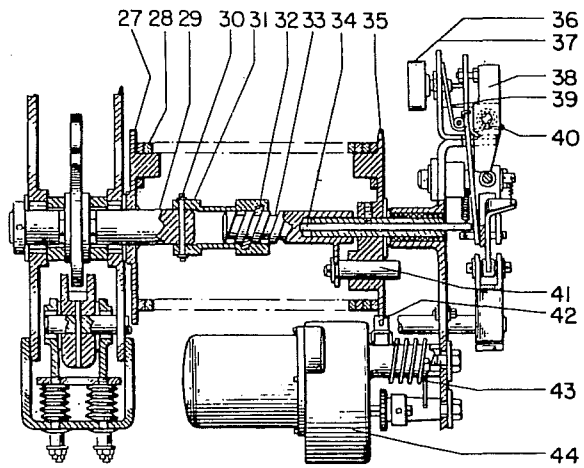

SECTION B-B

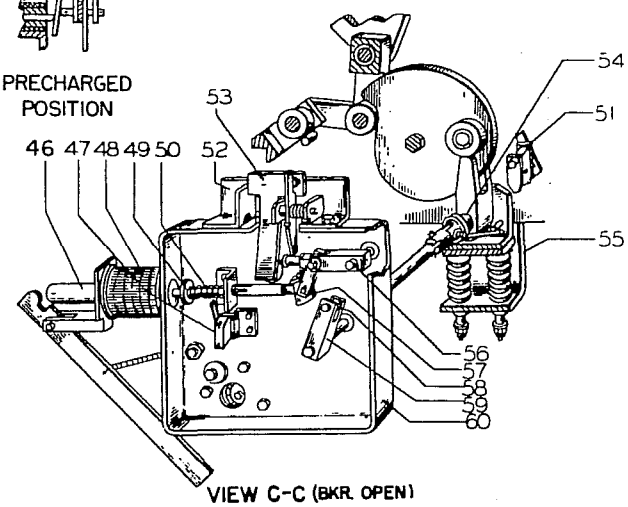

VIEW C-C (BKR. OPEN)

1. Control Panel
2. Not Used
3. Coupling
4. Maintenance Bolt Interlock
5. Trip Coil 52/TC
6. Trip Coil Armature
7. Trip Latch
8. Latch Checking Switch
9. Latch Stop Plate
10. Trip-free Link
11. Trip Latch Roller
12. Intermediate Link
13. Toggle Link
14. Cam Follower Roller
15. Balancing Spring
16. Breaker Operating Rod
17. Output Crank
18. Dashpot Fill Plug
19. Dashpot
20. Cam
21. Cam Prop Roller
22. Mechanism Frame
23. Cam Prop
24. Back Plate
25. Spring Washers
26. Belleville Washers
27. Spring Plate
28. Spring
29. Shaft
30. Pin
31. Coupling } Differential Indicator
32. Key } Differential Indicator
33. Jack Screw } Differential Indicator
34. Control Plunger
35. Sprocket Wheel
36. Spring Cut-out Switch-Front 52/SCO
37. Motor Governor Switch-Rear 44/
38. Latch
39. Paddle Spring
40. Latch Spring
41. Stop Pin
42. Ratchet Pawl
43. Ratchet Spring
44. Motor
45. Manual Spring Cut-out Interlock
46. Closing Release Coil Armature
47. Switch 52/LC(C)
48. Closing Release Coil 52/CC
49. Closing Release Coil Plunger
50. Return Spring
51. Prop Interlock
52. Switch Bracket
53. Paddle
54. Cam Prop Return Spring
55. Buffer
56. Lever
57. Closing Release Pawl
58. Roller
59. Cam Prop Lever
60. Motor Support Bracket

Figure 4 Type ML-10 Mechanism

Contact Wipe
The wipe of the contacts is 3/8 inch plus 0, minus 1/16 inch. This may be adjusted by raising or lowering the contact rods with respect to the crossarm. The lower part of the contact rod and the inner surface of the end of the crossarm is serrated horizontally. This allows vertical adjustment in 1/16 inch steps.

The six contact rods may be adjusted to produce the same contact wipe. In addition to this, they should touch the contact fingers at the same time. Practically, some differences will exist between phases, but it should be possible to adjust them to touch within 1/8 inch of each other.

MECHANISM
Cam Prop And Buffer
The cam prop (23, figure 4) is supported by a spring buffer. The buffer consists of forty spring washers inside the "U" bracket and sixteen Belleville washers outside the "U" bracket. The forty washers are arranged in four stacks. Each stack contains five series sets of two washers in parallel. The individual washer is saddle shaped and, when it is properly paired to obtain minimum height, the distance between the inner surfaces at the hole is 3/32 inch. The normal stack height under compression is 15/16 inch.

The Belleville washers outside the "U" bracket are stacked as saucers are stacked and thus are in parallel. The castellated nuts are adjusted so that the cam prop roller (21, figure 4) bears on the cam prop (23) with central bearing (front view) and with a wipe on the centerline of the prop of plus or minus 1/16 inch (side view). A small hole in the side mechanism frame permits a view of the prop wipe. The castellated nuts are wired in pairs to prevent loosening during operation. The buffer adjustment is made at the factory and normally need not be changed.

The bolts holding the buffer bracket to the mechanism frame are equipped with locking plates and the bolt threads are coated with #1201 red *Glyptal.

Cam Prop Interlock
The cam prop interlock (51) which is actuated by the output crank (17) locks the cam prop (23) in position. The clearance between the cam prop and the cam prop interlock should be 1/32 inch plus 1/32 inch minus 0.

Trip Latch
The wipe of the trip latch (7, figure 4) is adjustable by moving the position of the latch plate (9). The wipe should be 1/4 inch plus or minus 1/16 inch.

The trip latch clearance should be 0.008 inch to 0.020 inch in the open position. This is adjustable by a change in the shims which held the yoke in turn holding the trip latch. After adjustment of the latch clearance, the latch wipe should be rechecked.

There should be about 1/16 inch clearance between the trip latch plunger extension pin and the face of the latch arm with the trip coil de-energized.

Latch Checking Switch
The latch checking switch should operate when the latch resets in order to indicate latch position. The checking switch should have 1/16 inch to 1/8 inch wipe when the latch is reset.

CHARGING AND DISCHARGING THE SPRING
The "T" wrench may be used to charge and discharge the closing spring. It is stored in the bottom of the mechanism house.

The torsion closing spring is suspended between two plates. On the mechanism frame end of the spring, the spring plate (27) supports it and on the motor support end it is supported by the sprocket wheel. The spring is fastened to the two plates as shown in figure 6. The sprocket wheel also acts as a ratchet wheel through the action of its ratchet. The "T" wrench fits the square end of the motor shaft which is accessible through a hole in the motor support bracket (60). Clockwise rotation of the wrench charges the spring. Overwinding of the spring is prevented by a stop pin (41) which extends through the sprocket wheel and engages a bolt extension of the motor support bracket. This stop pin is driven by the differential indicator device (31, 32, 32, figure 4) which acts as a jacking screw to extend the stop pin a distance proportional to the number of turns of the

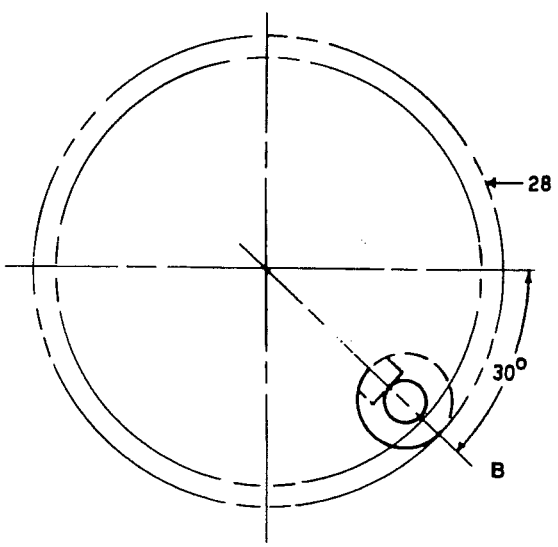

Figure 5 Closing Spring from Motor Support Bracket End - Spring Completely Discharged

spring. With the spring slightly past the fully wound position, the stop pin should interfere axially approximately 1/4 inch with the stop bolt. The fully wound position is indicated by a stop clearance of 3/4 inch plus 1/4 inch manually. Electrically, the motor drift will close the stop clearance to about 1/2 inch plus or minus 1/4 inch.

In order to discharge the spring from any wound position, it is necessary to gradually relieve the force of the spring. Turn the "T" wrench slightly clockwise and raise the ratchet (42) by depressing the small handle. Allow the spring to unwind gradually until its force is completely relieved.

CAUTION

Be sure that the motor circuit is de-energized before attempting manual winding.

Do not allow the spring to reverse wind without restraining its motion with the "T" wrench since damage to the differential indicator (31, 32 and 33, figure 4) may result.

The motor governor switch (37), the spring cut-out switch (36) and the latch for the manual spring cut-out switch (38) are attached to a bracket mounted on the motor support bracket (60). They are all actuated by the differential indicator (parts 31 and 33) through the plunger and paddle. The motion of the plunger is parallel and equal to that of the stop pin advancing to the right with rising spring pressure.

The motor governor switch which is normally closed and the spring cut-out switch which is normally open are individually adjustable by means of the small jam nuts holding them in place. The motor governor switch should be adjusted to open its contacts on rising spring pressure when the main torsion spring is wound 2.07 turns or 747 degrees.

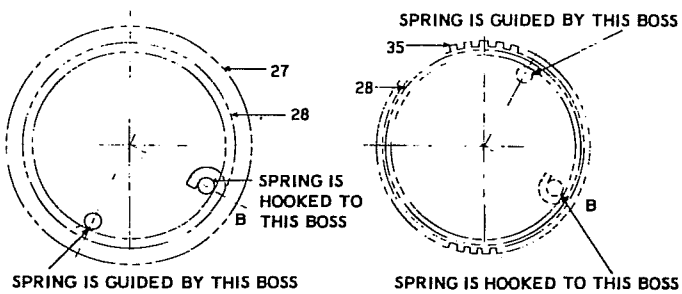

Figure 6 Fastening of Closing Spring

The position as given above is indicated by a stop clearance of 3/4 inch plus or minus 1/4 inch manually. For convenience, the line painted on the spring is parallel to the axis of the spring when the spring is fully wound to the 2.07 turns. This spring, when it is completely discharged as it would be laying on a bench, would have the ends opposite each other (see figure 5). When it is put in the mechanism with the cam rollers (21) on the prop (23), and still completely discharged, it will continue to look like figure 5 with the ends in line and 30 degrees below the horizontal. When the spring is fully charged for the first time, the sprocket wheel (35) will turn two complete revolutions plus approximately 4 teeth. Since there are 54 teeth in the sprocket wheel, the spring will have turned 747 degrees (approximately) and will stop in position (A) as shown in figure 7.

When the spring is discharged, the spring plate (27) at the mechanism end rotates 360 degrees and returns to position B as shown in figure 7. From now on, when the spring is charged, it will rotate only 360 degrees on the sprocket wheel (35) end and always stop in position A (figure 7). In other words, the spring discharges one turn on the spring plate (27) end and charges one turn on the sprocket wheel (35) end each time the breaker is closed.

Control Switches

The settings of the various control switches are all referenced on the closing spring (28). Figure 8 shows the sequence in which they operate during a 360 degree charging operation. First, the stop pin (41) shown in position D is withdrawn when the breaker is closed to set up the mechanism for the spring-charging operation. The spring is charged by turning the sprocket wheel one turn clockwise, starting at point A. When the end of the spring reaches point F

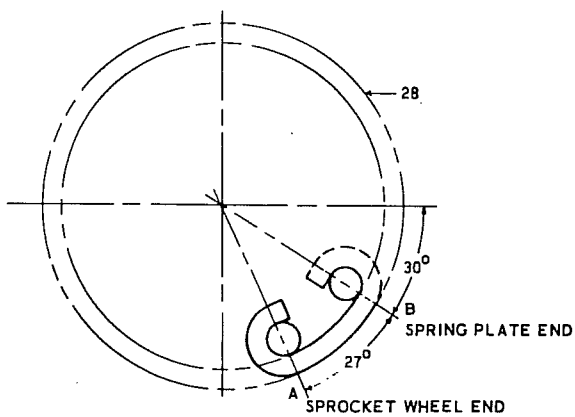

Figure 7 Closing Spring - Fully Charged Position

the manual spring cutout interlock (45) engages, and when it reaches point E, the contacts (36) make. When the spring end reaches point C, the power supply to the motor is disconnected by the motor governor switch (37) and the mechanism drifts about 18 degrees to stop at point A, having traveled 360 degrees. If the sprocket wheel should travel beyond this point for any reason, it would be stopped after moving about 20 degrees by the stop pin (41) at point D.

The closing release coil auxiliary contact switch (CCX) is located on the motor support bracket. This switch should be set to open its contacts when the gap between the closing release coil armature and its pole piece is 0.075 inch for DC and 0.100 for AC.

Auxiliary Switch

The auxiliary switch mounted on the mechanism panel provides non-overlapping "a" and "b" switches. The trip circuit contains two "a" switches which break the trip coil current (refer to the wiring diagram furnished with the instruction book). For electrical trip-free operation, these switches should make before the main breaker contacts make and are set to close their contacts approximately one inch before the fully closed position.

Opening Dashpot

The opening dashpot located in the rear of the mechanism house is filled with D50H27 oil (Univis #J-43). The fill plug is located in the right side of the dashpot, being exposed by a hole in the right side of the mechanism frame when facing the mechanism. The proper oil level is even with the bottom of the fill hole with the breaker in the closed position.

It is most important that the dashpot be filled with the breaker in the closed position, i.e. with the dashpot stem withdrawn. In this position, the oil level should be even with the lower edge of the tapped hole for the fill plug on the accessible side of the dashpot. The best way to check this is to start to open the contacts with the maintenance bolt and to observe whether the inserted portion of the stem causes the oil level to rise immediately above the lower edge, causing overflow of the oil. The dashpot can be assumed to be properly filled if this overflow occurs within the first 1/4 inch of downward travel of the stem (the 1/4 inch travel is equivalent to two complete turns of the maintenance bolt). If it has been determined that the dashpot is properly filled, the stem should again be withdrawn to the fully closed position and the "lost" oil refilled through the oil fill hole before the plug is replaced and tightened.

If, however, the dashpot is found to be low on oil, oil should be added with an oil can until it starts overflowing. After approximately 20 to 30 seconds, more oil should be added into the dashpot and this procedure must be repeated until the dashpot will not accept any more oil. Sufficient time must be allowed between refills to permit the oil to pass through the restrictive orifices. If the oil level was very low, this procedure might be lengthy and require some patience.

An adjusting coupling is provided at the top of the dashpot rod. The dashpot is adjusted at the factory for proper operation and should not normally require field adjustment. Changing the engagement of the

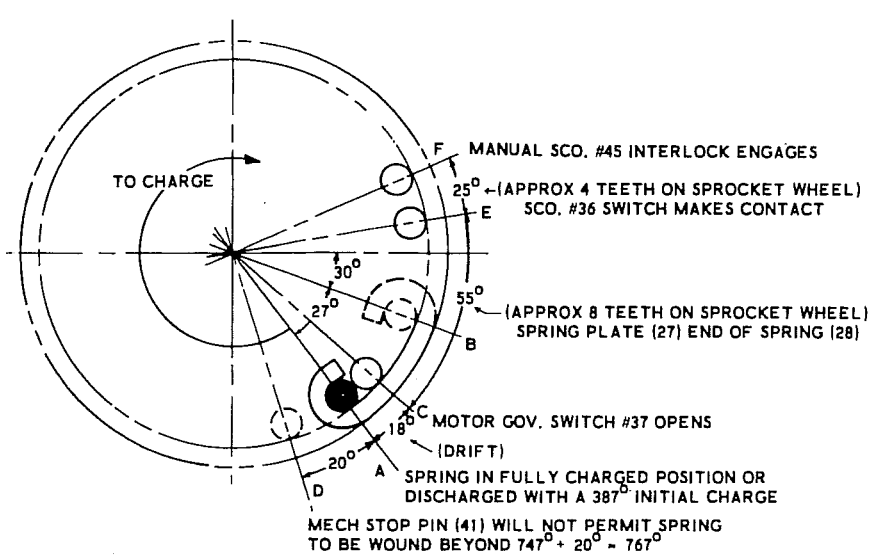

Figure 8 Closing Spring - Sequence of Switch Operation

dashpot rod in the adjusting coupling will change the point on the opening curve at which the dashpotting is effective.

OIL

The specified high-speed performance of the modern oil blast breaker is dependent upon the use in the breaker of oil having the proper characteristics. It is recommended that GE #10-C oil be used in these breakers since its characteristics, particularly at low temperatures, make it especially suited for use in oil blast breakers.

Before final adjustments are made, the oil tank should be filled with GE #10-C oil. Precautions must be taken to be sure of absolute dryness and cleanliness of the apparatus before filling and to prevent the entrance of water and dirt during the transfer of oil to the apparatus. For more detailed information on equipment and procedure for filtering GE #10-C oil, obtain Bulletin GEA-4937 from the nearest Canadian General Electric Sales Office.

FILLING THE TANK
Before filling with oil, all accessories, such as the drain valve and oil gauge, must be oiltight. The threads should be filled with *Glyptal or equivalent. A plug is furnished for the outlet side of the drain valve and should be used to prevent any leakage if the valve seat becomes damaged from use.

The tank should be filled while in the lowered position and should be filled to a point 2-1/2 inches from the top rim (see figure 9).

The top of the gauge rod for normal oil level at 20 C is 1-3/16 inches above the lowest portion of the oil gauge glass. The range between minimum and maximum is represented by the visible portion of the gauge glass and covers a temperature range of 70 C or from plus 40 C (+104 F) to minus 30 C (-22 F). The oil level at any intermediate temperature is represented by a proportionate part of the gauge range. It is important that the oil level never falls below the minimum level so that the lower end of the bushing is always immersed in oil above the end of the ground sleeve.

In filling, care must be taken so that moisture will not be absorbed by the oil during the filling process. When cold drums of oil are brought into a warm place, they should be allowed to stand before opening until there is no condensation on the outside and until they are thoroughly dry. The preparation and filling should be done on a clear, dry day or adequate protection of some kind provided against moisture being absorbed. Metal or oil-proof rubber hose must be used, as oil dissolves the sulphur in ordinary rubber hose. This may cause trouble, as sulphur attacks copper.

TESTING THE OIL
All new oil should be tested before being placed in the breaker. The dielectric strength of the oil when shipped is at least 30,000 volts when tested in a standard gap with one inch disk terminals 0.1 inch apart. New oil of less than standard dielectric strength (30,000 volts) should not be placed in the breaker oil tanks until its insulating value has been brought up to the above standard (by filtering, drying, etc.).

TANK HEATERS
Tank heaters are provided for areas of low ambient temperature. Heaters should be energized when the ambient temperature falls below 0 F.

SUMMARY OF ADJUSTMENTS

The following summary of adjustments is listed against breaker position and spring position as an aid to checking (refer to figure 9).

Breaker open, spring any position, no control power.

BKR. - Mark the breaker open position.

MECH. - The trip latch clearance should be 0.008 inch to 0.020 inch. The trip latch wipe should be 3/16 inch to 5/16 inch.

MECH. - The latch checking switch should have 1/16 inch to 1/8 inch wipe with latch reset.

Breaker closing (using maintenance closing bolt). Spring any position, no control power.

BKR. - The breaker should operate smoothly throughout its stroke.

BKR. - Mark the contact make point.

BKR. - The lift rods should hang in a vertical position with approximately 0.005 to 0.015 inch clearance between the guide and the rod.

BKR. - The contacts should be centrally aligned with the interrupter.

MECH. - The trip circuit "a" auxiliary switch contacts should make approximately 1 inch from fully closed position.

Breaker closed, spring any position, no control power.

BKR. - The linkage reference dimension should be 3-5/16 inches plus or minus 1/8 inch.

BKR. - Mark the closed position. From above, the stroke should be 5 inches plus or minus 1/8 inch and the wipe should be 3/8 inch plus 0, minus 1/16

inch. (Note that the latch is holding the force of the breaker parts, not the maintenance bolt.)

MECH. - The dashpot oil level should be even with the bottom of the fill hole.

Rising spring pressure, spring partially discharged, no control power.

MECH. - The manual spring interlock latch should engage 12 teeth before the motor governor switch opens. Latch clearance 0.002 inch to 0.015 inch.

MECH. - The spring cut-out switch should make its contact eight teeth before the motor governor switch opens.

MECH. - The motor governor switch should open its contacts when the stop clearance is 3/4 inch plus or minus 1/4 inch between the stop pin and the manual stop located on the motor support brackets.

Additional adjustments not dependent on breaker or spring position.

MECH. - The CCX switch should have 1/16 inch to 1/8 inch wipe with closing release coil armature against the pole piece.

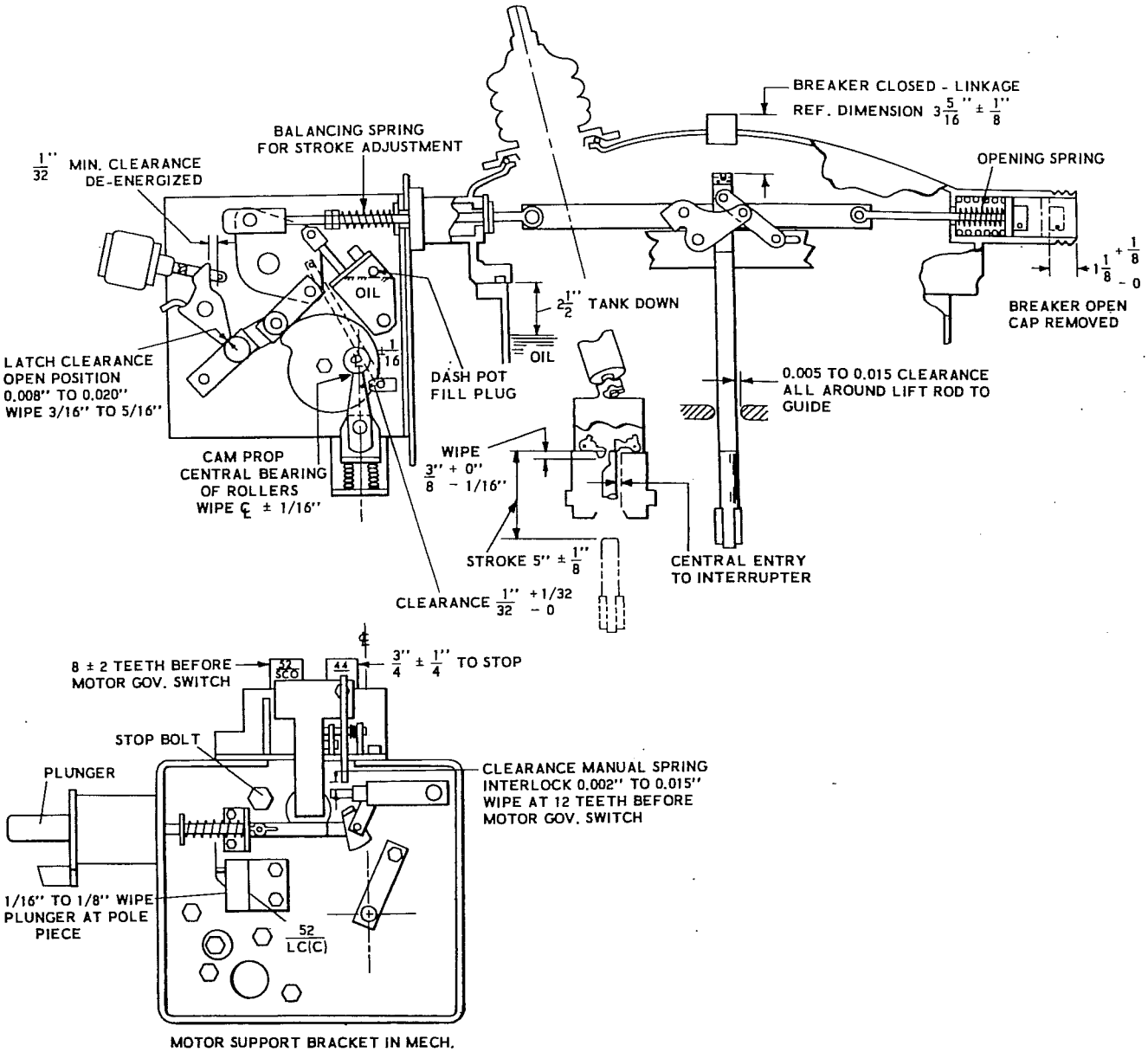

Figure 9 Adjustments for Type FKP Oil Blast Circuit Breaker, 600 and 1200 Ampere.

MECH. - The maintenance bolt interlock should clear the trip latch in its normal position.

MECH. - The trip coil plunger should clear the trip latch by 1/32 inch minimum with the latch reset.

MECH. - The cam prop rollers should have central bearing and rest on the centerline of the cam prop with plus or minus 1/16 inch tolerance.

MECH. - The cam prop interlock should clear the cam prop by 1/32 inch plus 1/32 inch minus 0.

Operation Adjustments. (Discussed under OPERATION, Part 4).

a) The no-load opening speed should be 5.5 feet to 7.5 feet per second in oil.

b) The closing time should be a maximum of fifteen cycles.

c) The reclosing time should be approximately 16 to 20 cycles.

d) The contact parting time should be less than 2.5 cycles except where current tripping devices are used. In this case, the contact parting time will be delayed by the time required by the operation of the current tripping device.

BUSHINGS

The bushings are installed from above the top frame. The gasket is installed between the support flange and the top frame. The interrupters are aligned by adjustment of the bushing on a spherical seat. After this adjustment has been made, be sure that the bushing nuts are tightened evenly.

A bushing can be removed without disturbing the bushing current transformer. To remove the bushing, first remove the four bolts holding the lift rod guide and drop the guide down on top of the crossarm. The interrupter can now be removed by loosening the clamping bolt and unscrewing it from the bushing. Remove the three bushing nuts and the bushing will be free to be removed.

BUSHING CURRENT TRANSFORMERS

The bushing current transformers are mounted on the inside of the top frame and are installed from underneath the top frame. The bushing current transformer leads are brought through an oil seal into the mechanism house. In order to remove a bushing current transformer, it is necessary to remove the interrupter from the bushing. With the leads disconnected and the interrupter removed, the bushing current transformer support plate can be removed and the transformer slipped down over the lower end of the bushing.

FINAL INSPECTION

After the breaker has been installed with all mechanical and electrical connections completed, the following inspections and tests should be made:

1. See that the breaker is properly set up and leveled on its foundation.

2. See that all nuts, washers, bolts, cotter pins and terminal connections are in place and tightened. The gland nuts on all valves and oil gauges should be checked to see that they are sufficiently tight to prevent leakage. In tightening the gland nuts, precautions should be taken to prevent damaging the packing through excessive pressure.

3. Inspect all insulated wiring to see that it has sustained no damage during installation and test it for possible grounds or short circuits.

4. See that all bearing surfaces of the operating and breaker mechanisms have been lubricated.

5. See that the tank is filled with oil to the proper level.

6. Make certain that the dashpot is filled to the proper level.

7. Make certain that the installation adjustments and operating adjustments have been thoroughly checked.

8. See that all covers and bolted connections are securely tightened and that all pipe plugs are properly installed and tightened to prevent the entrance of moisture.

9. Operate the breaker manually to check for binding, excessive play, etc. and electrically for performance.

10. Recheck that dielectric strength of the oil after no-load operations are complete.

11. See that all points where the surface of the paint has been damaged during installation are repainted immediately.

PART 4

OPERATION

SPRING OPERATED MECHANISM

CLOSING

Consider the mechanism with the main spring fully wound and the control power available (see figure 4).

When the closing release coil (48) is energized through the closing control switch, the closing release armature and plunger (46 and 49) push the closing release pawl (57) against a roller extension on the cam prop lever (59). The pawl escapes beyond the cam prop lever after giving it a small angular displacement.

The main torsion spring (28) is retained at the right end by the sprocket wheel (35) and at the left end by the spring plate (27). The spring plate is coupled directly to the cam (20) so that the force of the spring is taken by the cam prop rollers on the cam prop. The cam prop is supported by a spring buffer (55).

The cam prop lever is coupled to the cam prop (23) through a universal type coupling. As the cam prop lever (59), and hence the cam prop, receives the momentary angular displacement, the cam prop rollers (21) escape from the cam prop (23) under force of the torsion spring (28), rotate with the cam (20) and return to their normal position on top of the cam prop, which has returned to its normal vertical position through the action of the cam prop return spring. The rotation of the main cam is 360 degrees. During this rotation, the cam follower roller is lifted away from the cam center and forces the bottom of the output crank (17) backward, since the trip latch roller (11) is held in position by the trip latch (7). When the bottom of the output crank is forced backward, it pulls forward on the coupling which attaches to the breaker operating rod. This motion is transmitted through the breaker linkage to close the contacts inside the interrupters. The pin attaching the output crank (17) to the coupling (3) carries the levers to operate the SB-1 auxiliary switch, the position indicator and the operation counter. Another pin in the output crank operates the cam prop interlock (51) which prevents the cam prop (23) from moving unless the breaker is in the open position.

The closed position of the breaker is reached when the cam prop rollers rest on top of the cam prop. The additional energy supplied by the spring over and above that required by the breaker is absorbed by the spring buffer. No overtravel of the breaker contacts is required by the mechanism to close since the cam in the closed position serves as a prop.

RECHARGING THE SPRING

Inside the spring (28) is a differential indicating device which relates the angular relation of the main torsion spring. The spring is wound 2.07 turns or 747 degrees when fully wound. In closing, the spring discharges 360 degrees down to 387 degrees or 1.07 turns. This is the precharged position. The action of the differential indicator device and the motor governor switch is to restore the spring to its fully wound position. In this fully wound position, the mechanical stop (41) projects through the sprocket wheel (35) and prevents overwinding of the main torsion springs.

In parallel with the stop pin (41), the control plunger (34) extends through the sprocket shaft and actuates the motor governor switch (37) and the spring cutout switch (36). When the main cam rotates to close the breaker, the coupling (31) turns with it, withdrawing the jack screw (33) which withdraws the stop pin and allows the control plunger to be withdrawn through the action of the intermediate lever return spring. When the control plunger (34) is withdrawn, the motor switch contacts close and the motor winds the sprocket (and spring) in the same direction in which the cam turned. As the sprocket turns, the coupling is held and the jack screw extends itself until the control plunger actuates the motor governor switch, at which point the spring is again fully wound.

This control feature allows the spring to be fully wound from its completely discharged position by applying the proper motor voltage.

TRIPPING

The energy stored in the contact finger springs and the opening springs during each closing operation is used to accelerate the parts on opening. When the trip coil is energized through a protective device, the trip latch rotates counterclockwise and allows the linkage to collapse. The cam follower roller slips around the front of the cam and the holding force on the breaker operating rod is released. This allows movement toward the open position and tripping is accomplished.

TRIP-FREE OPERATION

The spring-charged mechanism linkage is both mechanically and electrically trip-free.

RECLOSING

A breaker is normally operated in the closed position. From this position, one high speed reclosing operation is possible since the spring contains sufficient energy for one closing operation. Subsequent reclosing operations depend upon the spring winding time, which is 3 to 5 seconds depending upon the available control voltage at the time. Following tripping, the latch checking switch indicates that the linkage is recoupled and thus controls the release of the closing mechanism. Normal high speed reclosing time is 15 to 20 cycles.

ANTI-PUMP

This mechanism is provided with anti-pump protection by the use of a seal-in resistor. The seal-in resistor is inserted by the operation of the closing release coil switch (CCX) which will remain in the operative position as long as an operator holds the control switch. Under this condition the closing release coil cannot be de-energized and, therefore, cannot be re-energized to cause pumping.

CAUTION

The seal-in circuit is not designed for continuous service. Operation of the seal-in circuit for periods in excess of five minutes may result in damage to the closing release coil and the seal-in resistor.

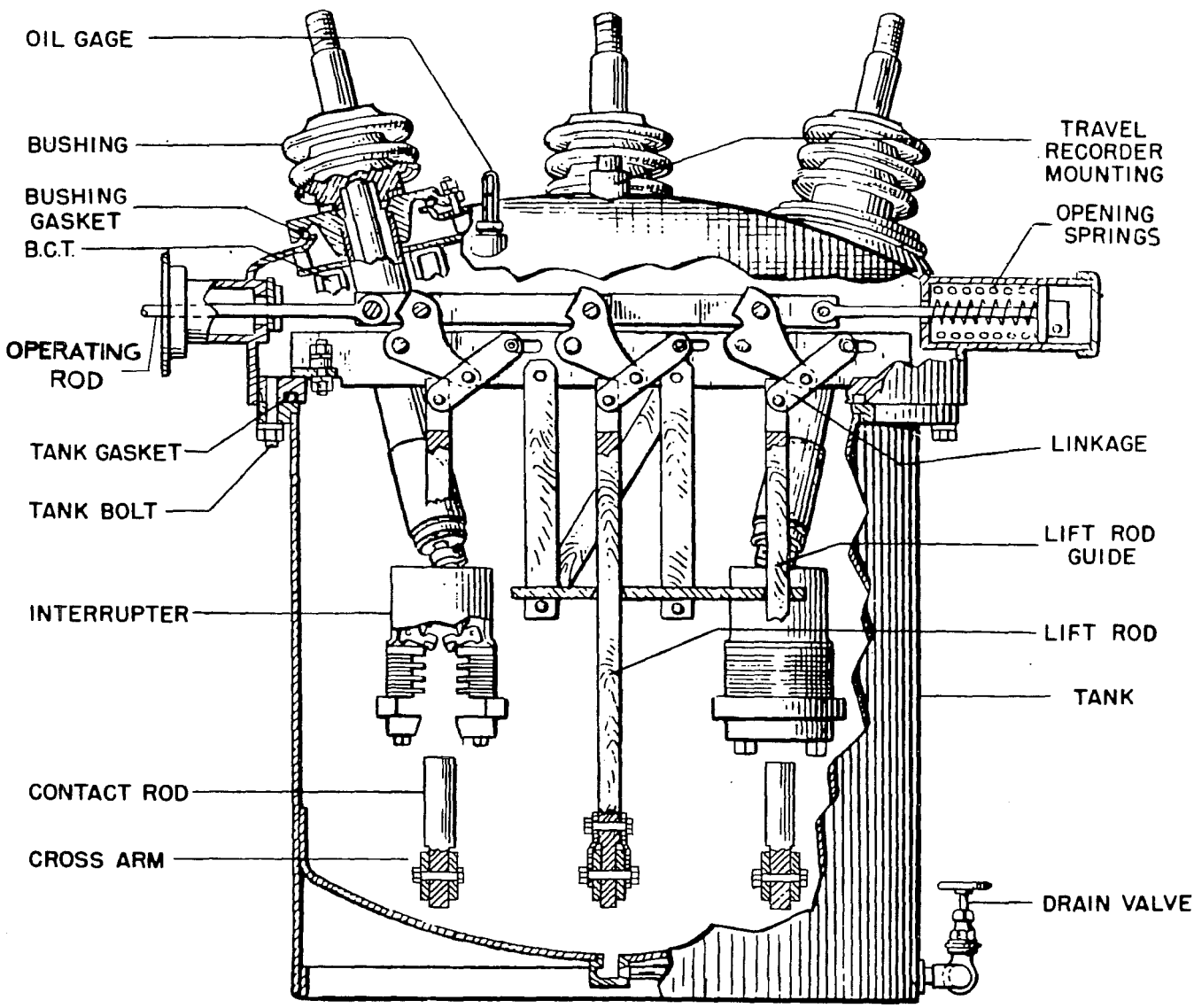

Figure 10 Linkage and Contacts.

BREAKER LINKAGE AND INTERRUPTERS

CLOSING

The breaker contacts consist of a set of stationary fingers and a moving contact. The breaker linkage raises and lowers the moving contacts in a straight (vertical) line. The moving contacts are raised to the closed position by the operating mechanism and held there by the prop and latches in the mechanism. When the latch is released in the mechanism, the contact finger springs accelerate the moving contact downward toward the open position. The amount of travel, 5 inches plus or minus 1/8 inch, is known as the stroke.

The motion of the parts is as follows (refer to figure 10). To close the breaker, the operating rod is pulled to the left. This rotates the breaker linkage and lifts the operating rods. The insulated rod carries the crossarm which carries the moving contact rods. The moving contacts enter the interrupter chamber (the chamber is oriented with the vertical centerline of the breaker and the contacts are adjusted for central entry) and raise the contact fingers 3/8 inch, stopping in this position, which is referred to as the closed position. In raising the contact fingers the 3/8 inch (wipe), the contact finger springs are compressed. These springs decelerate the moving contacts at the end of the closing stroke.

TRIPPING

When the breaker opens under load, the contacts part, drawing arcs between the tip of the contact fingers and the moving contact. The pressure generated by the arc forces oil through the port openings in the baffle stack. The flow of oil, coupled with the configuration of the baffle stack, produces interruption. The opening dashpot in the operating mechanism limits the opening speed of the breaker contacts and absorbs the energy at the end of the breaker stroke.

The opening dashpot is so designed that additional opening distance is available to decelerate the higher speeds associated with interrupting high currents. This travel will be in excess of the 5 inches set dimension but the final open position should be 5 inches. No-load operation will not produce more than 1/4 inch overtravel on opening.

SPEED MEASUREMENT

After completing the preceding installation, adjustments and inspection, the breaker may be operated electrically to check the no-load performance. A travel analyzer may be used to obtain this information. A #10-32 tapped hole is located in the center of the block on top of the lift rod of phase No. 2. Access to the tapped hole is through the hole in the center of the dome.

The opening speed is determined by drawing a straight line through two points on the travel curve (see figure 12). One point is located on the opening curve 3/8 inch from fully closed. This is the point at which the contacts part. The second point is located on the opening curve 2-3/8 inch from the fully closed position (measured vertically). The slope of the line is an indication of the opening speed, which should be 6 to 8 feet per second in air. If curves are taken in oil, speeds should be 5.5 to 7.5 feet per second.

If it is found that the opening speed is not within the specified limits, recheck the contact wipe. The contact finger springs accelerate the contact rods on opening and a variation in the amount of wipe would affect the no-load speed.

The closing speed is determined by the mechanism and is not adjustable.

PART 5

MAINTENANCE

GENERAL

The safe and successful functioning of connected apparatus depends upon proper and reliable operation of the oil circuit breaker. For greater reliability, the oil circuit breaker must have regular systematic inspections during which every part is inspected carefully. The frequency of the inspections should be determined by each operating company on the basis of the number of operations (including switching), the magnitude of the current interrupted and any unusual operations which might occur. Operating experience will establish a maintenance schedule which will give an assurance of proper breaker condition. The

following paragraphs list the main points to be included in an inspection and a number of general recommendations.

PRECAUTIONS

1. Be sure the breaker and its mechanism are disconnected from all electric power, both high voltage and operating, before inspecting or repairing. After the breaker has been disconnected from power lines, grounding leads should be properly attached before coming in contact with any of the breaker parts.

2. Be sure the breaker framework is well grounded.

3. Use the maintenance closing device to assist in making adjustments. This is the primary purpose of the device because it permits slow closing and opening. It must not be used for closing the breaker on load.

PERIODIC INSPECTION

1. The contacts should be checked. See that they are aligned and that contact surfaces bear with firm uniform pressure. Replace badly pitted or burned contacts before they are turned away sufficiently to cause damage to other parts of the apparatus. If the silver alloy contact surfaces are only roughened, they may be smoothed down with a fine file.

2. The oil should be checked. Oil in service should be tested at frequent intervals. Three month periods are recommended. If the dielectric strength of the oil tests less than 16,500 volts it should be filtered.

   When sampling oil, the sample container should be a large-mouthed glass bottle. The bottle should be cleaned and dried with benzine and should be free from moisture before it is used. The sample of oil should be at least one pint. Test samples should be taken only after the oil has settled for some time. Samples should be taken from the valves at the bottom of the tank and sufficient oil should be drawn off to make sure the sample represents oil from the tank proper and not that stored in the drain pipe. A glass receptacle is desirable so that if water is present it may be readily observed. If water is found, an investigation of the cause should be made and a remedy applied. Excessive water is indicative of leakage somewhere in the breaker structure.

3. All insulating parts should be thoroughly cleaned to remove all traces of carbon which may remain after the oil has been drained from the tank. It is recommended that the oil be removed and the tank cleaned at regular intervals because filtering of the oil does not remove the carbon which adheres to the sides of the tank.

4. The operating and breaker mechanisms should be thoroughly checked. All bearing surfaces should be lubricated.

5. The dashpot piston should be examined to see that it works freely so that the dashpot functions properly.

6. All bolts, nuts, washers, cotter pins and terminal connections should be in place and properly tightened. The gland nuts on all valves and oil gauges should be checked to see that they are sufficiently tight to prevent leakage. In tightening the gland nuts, precautions should be taken to prevent damaging the packing through excessive pressure.

7. Operate the breaker slowly by hand (maintenance device) and check the points listed under SUMMARY OF ADJUSTMENTS.

8. Operate the breaker electrically and check the points listed under SUMMARY OF ADJUSTMENTS.

9. Inspect the bushing supports, as the vibration due to the operation of the breaker may cause the bushing to move slightly and result in misalignment of contacts.

10. Clean the bushings at regular intervals where abnormal conditions prevail such as salt deposits, cement dust or acid fumes, to avoid flashover as a result of accumulation of foreign substances on their surfaces.

11. The oil in the bushings may be checked for level. Remove the plug in the oil fill hole on the bushing cap and stick a "dip stick" in the hole until it bottoms. It should now show approximately 3/8 inch of oil when the bushing is in a vertical position.

12. See that the oil is at the proper level in the tank.

13. After making any adjustments, operate the apparatus by hand before attempting electrical operation.

14. Installation and maintenance will generally result in damage to the surface of the paint and corrosion will result at these points. All such places should be repainted immediately.

CURRENT TRANSFORMERS

If it should be necessary to replace a bushing current transformer, care must be taken to see that the end of the transformer carrying a white polarity mark is placed upwards. Performance data in the form of excitation and ratio curves are available for all transformers on the standard ratios. These are supplied with the order or can be secured by giving the proper references. For more detailed information refer to instruction book 296.

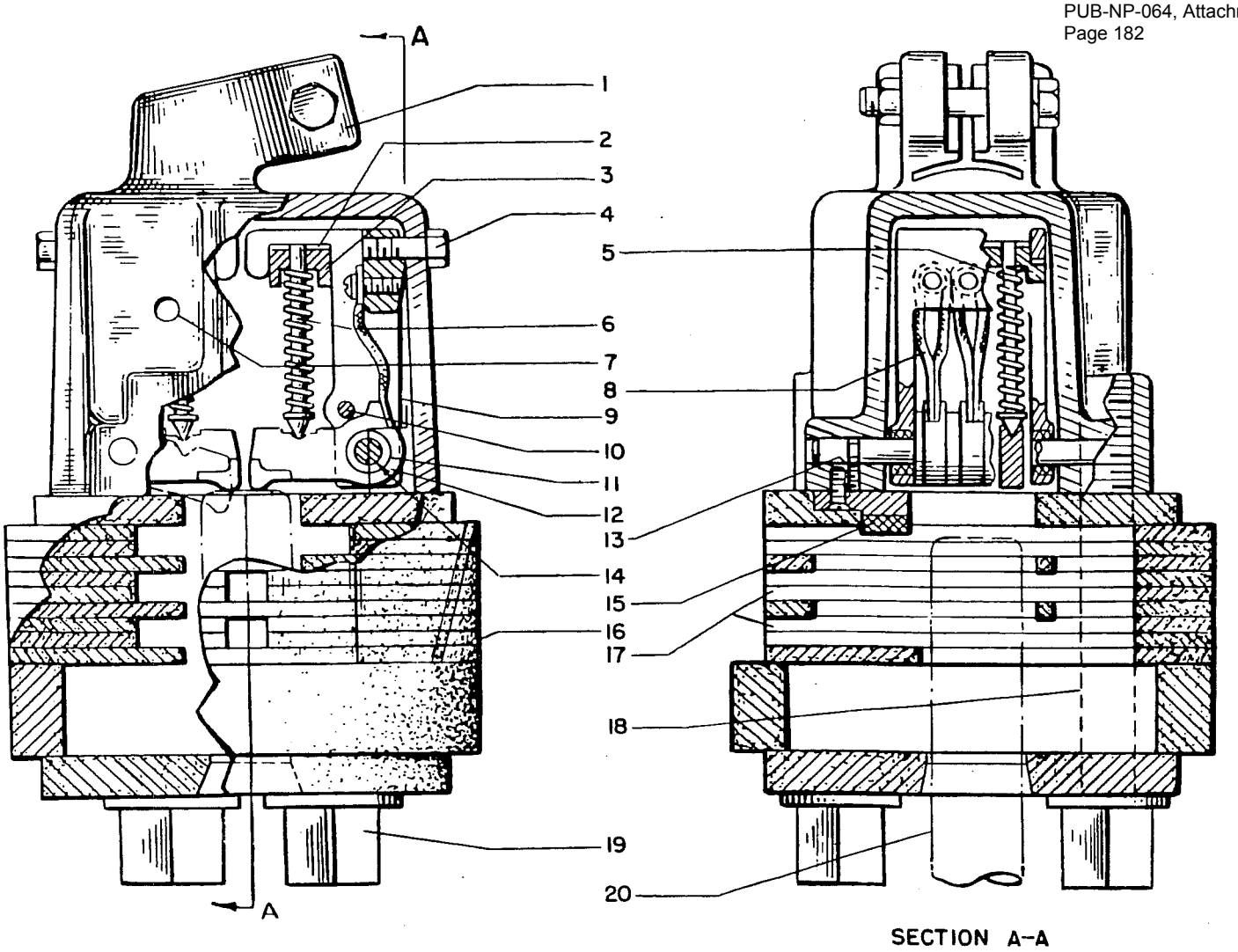

1. Adapter
2. Insulation
3. Guide Block
4. Screw
5. Spring
6. Spring Guide
7. Vent Hole
8. Contact Finger Braid
9. Yoke
10. Stop Pin
11. Sleeve
12. Contact Finger
13. Set Screw
14. Hinge Pin
15. Arcing Plate
16. Baffle Stack
17. Port Baffles
18. Insulated Stud
19. Insulated Nut
20. Contact Rod

Figure 11 Oil Blast Interrupter

INTERRUPTERS

The surfaces of the moving contacts are plainly visible with the breaker open and the tank lowered. The condition of the moving contacts is a good indication of the condition of the contact fingers. Refer to figure 11. By removing the four insulated bolts and lowering the baffle stack, the contact fingers may be seen. Each baffle stack is marked by a painted "V" so that proper relation of the baffles may be maintained during assembly.

If it is found by inspection that the fingers are badly eroded, they should be replaced.

To disassemble the fingers:

1. Remove the baffle stack (see figure 14).
2. Remove the two 3/8 inch bolts in the ends of the adapter (attached to the bushing) (see figure 15).
3. Remove one No. 8 set screw from below each hinge pin.
4. Remove the hinge pin. The finger assembly is free to be removed (see figure 16).

To remove the fingers from the finger assembly:

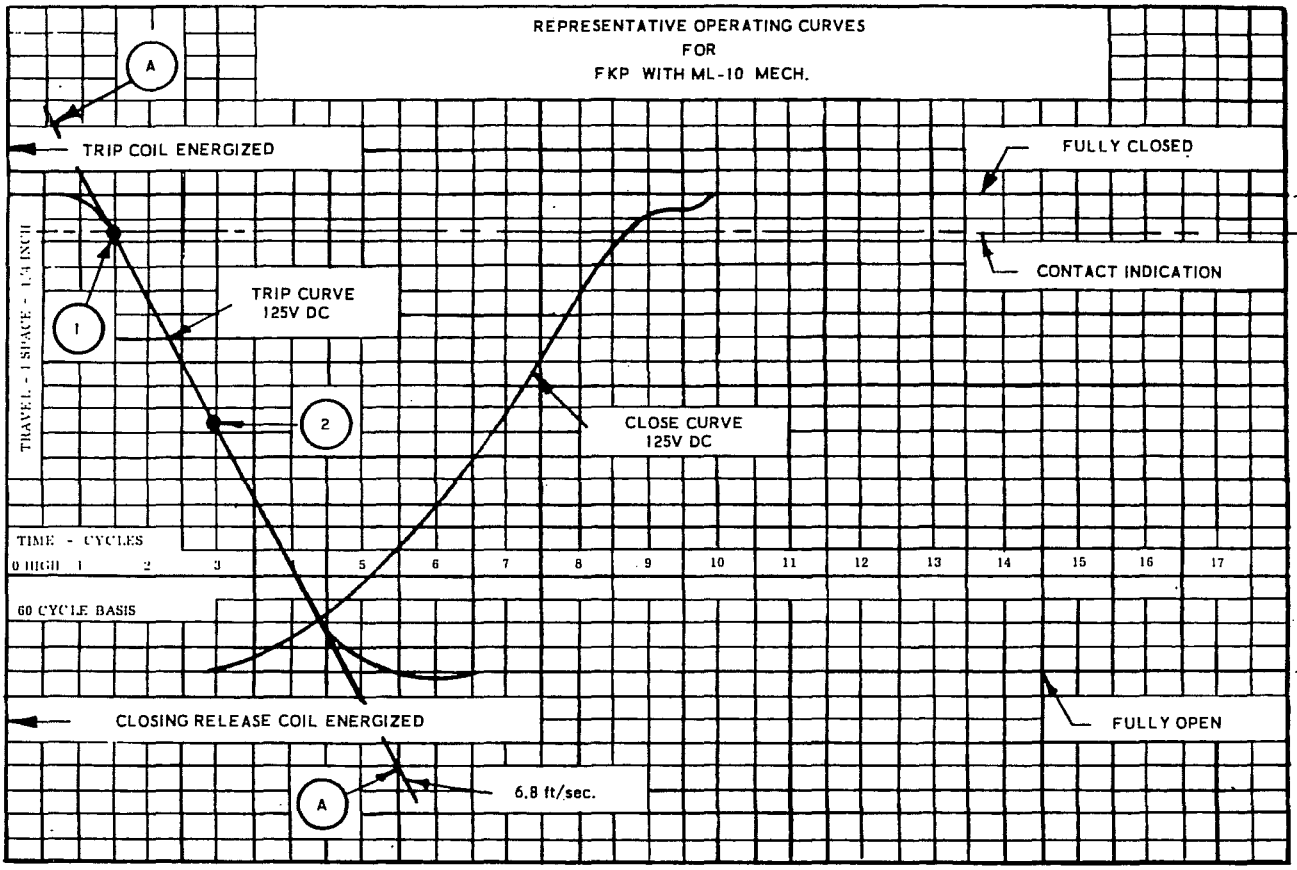

Operating Speed Range in Air
(Line drawn through points 1 and 2)
1 - On Curve 3/8" from fully closed
2 - On Curve 2-3/8" from fully closed

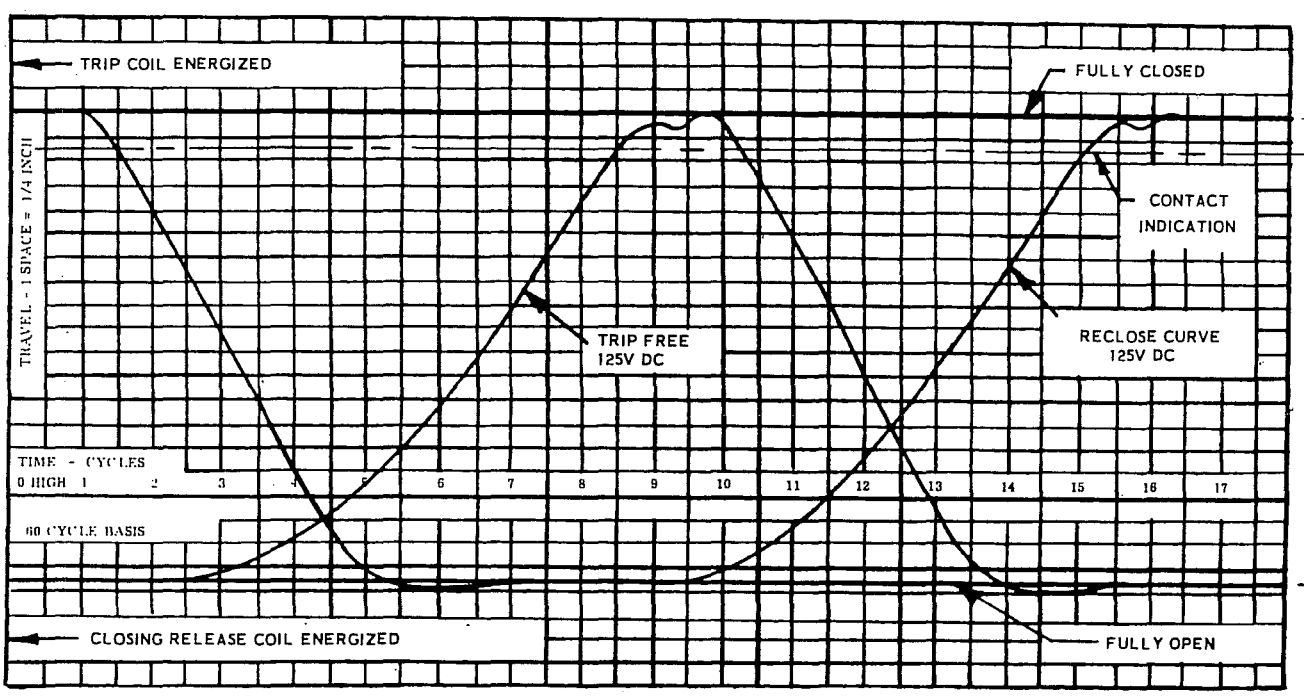

Figure 12 Representative Travel Curves.

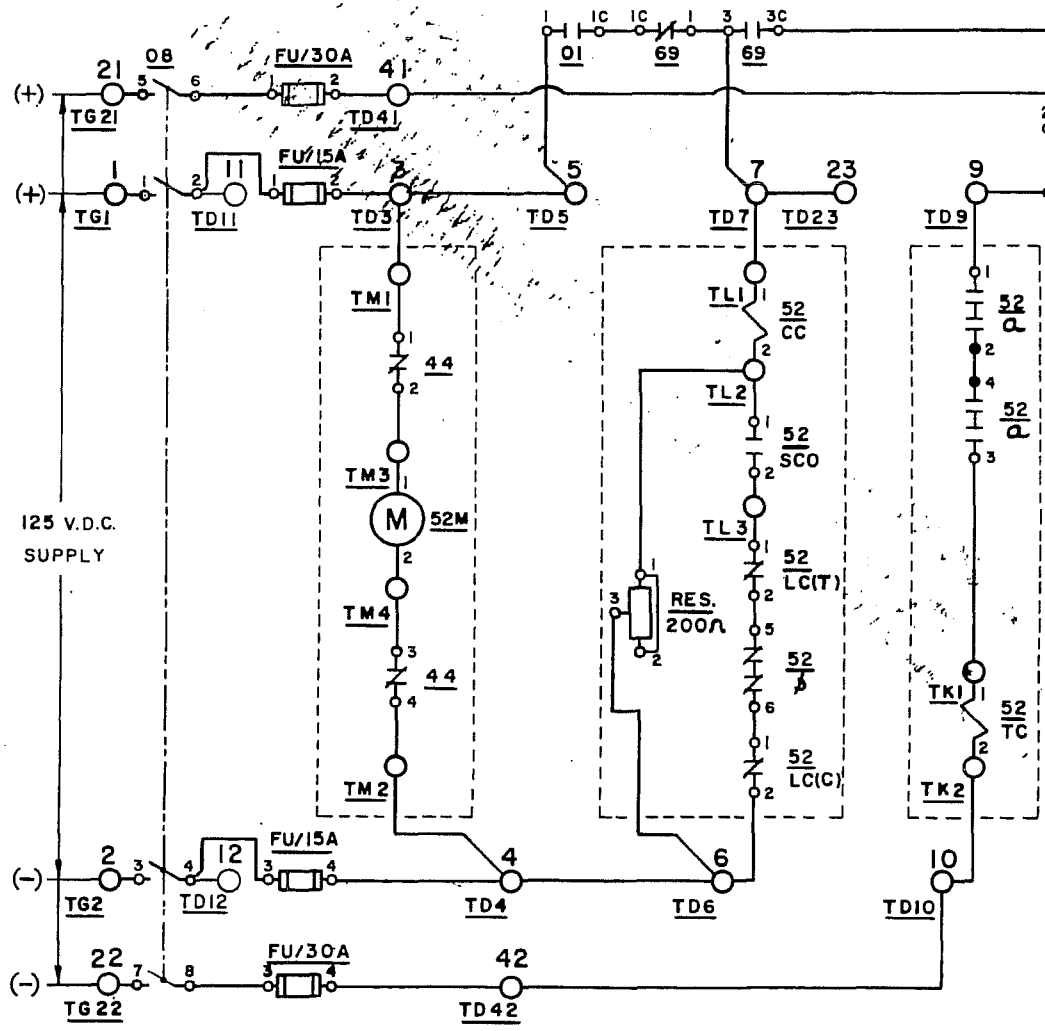

NOMENCLATURE			
NO.	DEVICE	FUNCTION	VALUE
08	KNIFE SWITCH	CONTROL POWER ISOLATION	
44	MOTOR GOVERNOR SWITCH	OPERATED BY CLOSING SPRING(OPEN WHEN SPRING CHARGED)M'T'R.STARTING	
52/a	AUXILIARY SW.	CLOSED WHEN BREAKER CLOSED	
52/b	AUXILIARY SW.	CLOSED WHEN BREAKER OPEN	
52/CC	CLOSE COIL	FOR CIRCUIT BREAKER CLOSING	10 AMP
52/TC	TRIP COIL	FOR CIRCUIT BREAKER TRIPING	10 AMP
52M	MOTOR	FOR CHARGING CLOSING SPRING	F.LOAD 3 A
52 LC(T)	TRIP LATCH CHECK SWITCH	CLOSES WHEN TRIP LATCH RESETS	
52 LC(C)	CLOSE LATCH CHECK SWITCH	CLOSES WHEN CLOSE LATCH RESETS	
52 SCO	CLOSING SPRING CUT-OFF SWITCH	PREVENTS CLOSING UNTIL CLOSING SPRING RECHARGED	
FU/15A	FUSE	PROTECTION	15 AMP
FU/30A	FUSE	PROTECTION	30AMP
RES/200	RESISTOR	ANTI-PUMP HOLDING RESISTOR	200 OHMS
01	SWITCH	CONTROL (CLOSE & TRIP)	
69	SWITCH	REMOTE LOCAL SELECTOR	
TE 100	TERMINAL	CONNECTION FOR REMOTE CLOSE	
TE 102	TERMINAL	CONNECTION FOR REMOTE TRIP	
TERMINAL BOARDS REQUIRED		,TD,TE, ,TG,TK,TL,TM	

69 CONTACT ARRANGEMENT			
CONTACTS HANDLE END		POSITIONS REMOTE	LOCAL
1 2	1		X
	2		X
3 4	3	X	
	4	X	

"X" DENOTES CONTACTS CLOSED (REAR VIEW)

01 CONTACT ARRANGEMENT				
CONTACTS HANDLE END		POSITIONS CLOSE	NORM	TRIP
1 2	1	X		
	2			X
3 4	3	X		X
	4	X		

"X" DENOTES CONTACTS CLOSED (REAR VIEW) SPRING RETURN

NOTE-FOR CUSTOMER'S INCOMING CONNECTIONS REFER TO C.E.M.A. STANDARDS 69-1

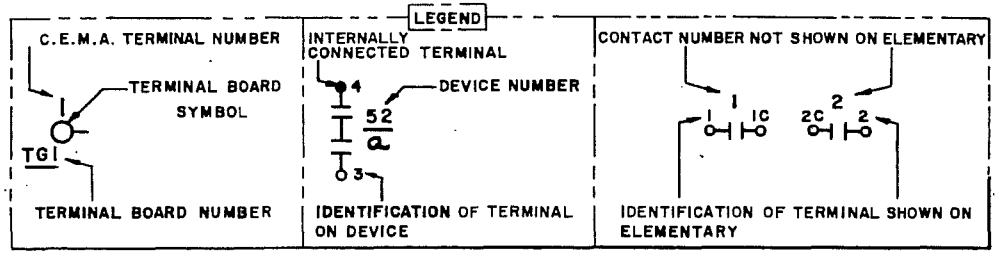

Figure 13 Typical Control Elementary

5. Compress the fingers slightly in a vise and remove the 3/16 inch diameter stop pin.

6. Release the vise.

7. Snap out the springs and spring guide from the fingers.

8. Remove the sleeve. Note that the 1/8 inch washers are between the fingers and the 3/32 inch washers are beside the fingers (see figures 17 and 18).

9. Unscrew the fingers and replace. Be sure the braid is pulled down so that the screw is in the center of the eye.

10. Reassemble in the reverse order. Make sure the fingers work freely.

11. A torque of from 8 to 12 ft-lbs should be applied to the insulating bolts to prevent cracking at assembly.

12. In replacing the two 3/8 inch bolts in the adapter, tighten slightly more than snug. Avoid over-tightening.

In addition to the fingers, each interrupter employs an arcing plate which aids in transferring the arc to the port opening. These arcing plates may be used until the arc resistant material is eroded about 75 per cent. When replacing the arcing plate, be sure to prick punch the material at the slot of the counter-sunk screw to prevent loosening.

GASKETS

Prepare gaskets and gasket surfaces (for cork, vellumoid and similar material) as follows:

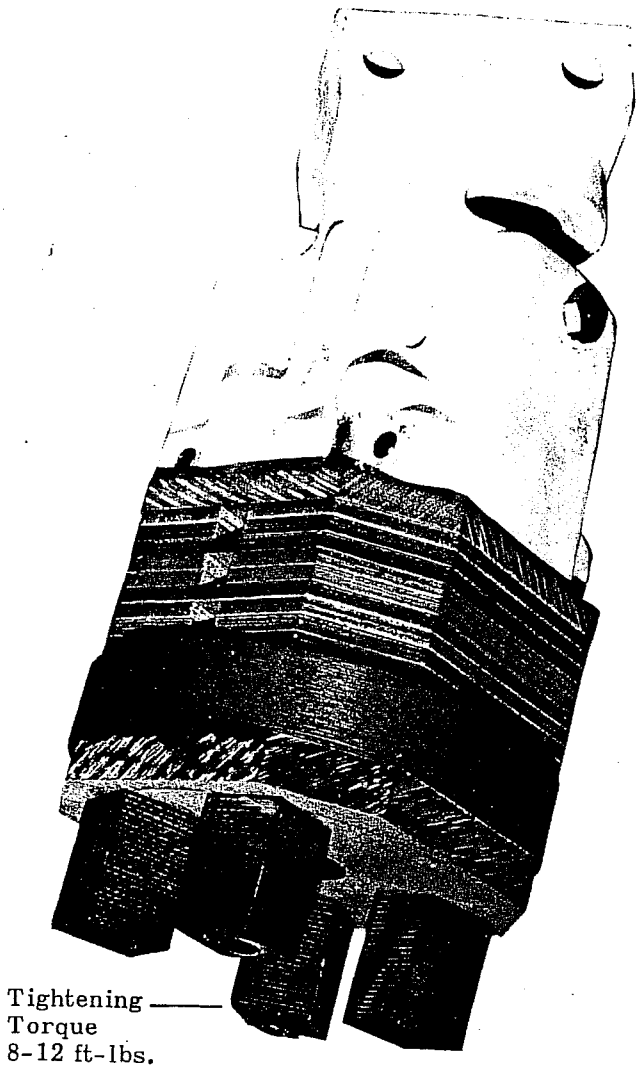

(a)

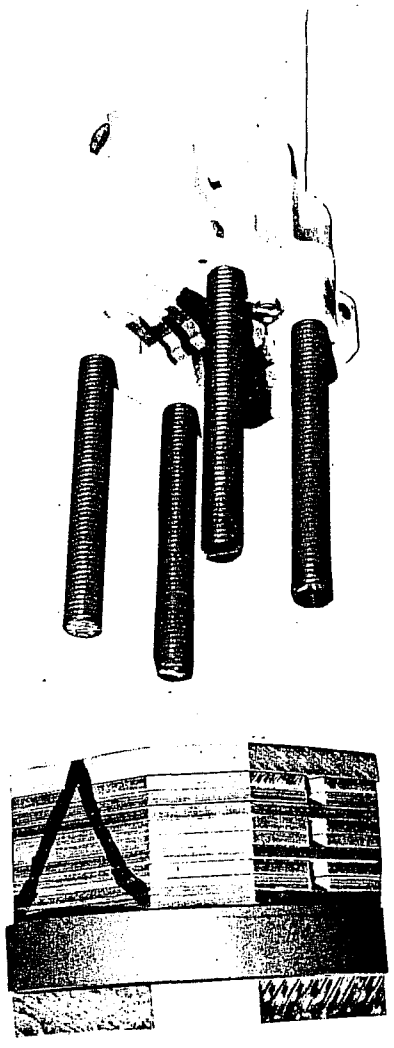

(b)

Figure 14 Removal of Baffle Stack

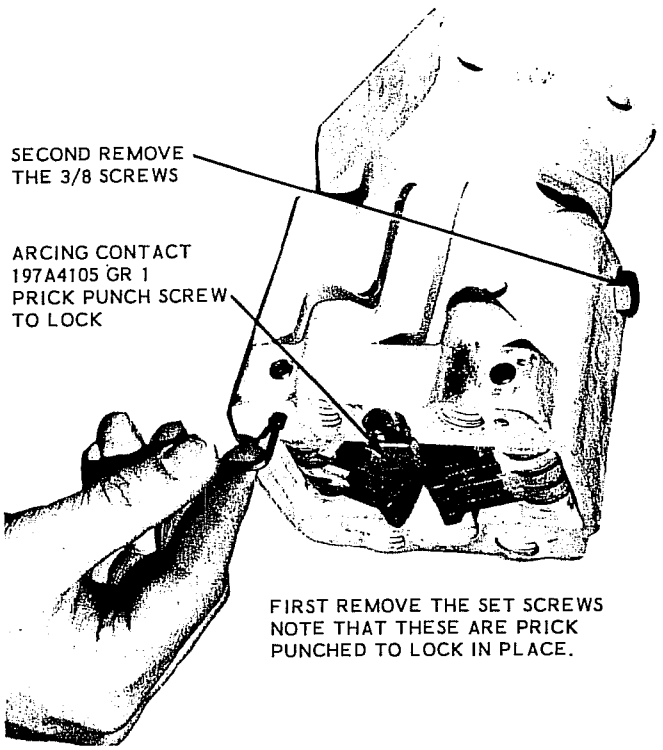

Figure 15 Contact Replacement

Figure 16 Removal of the Hinge Pins

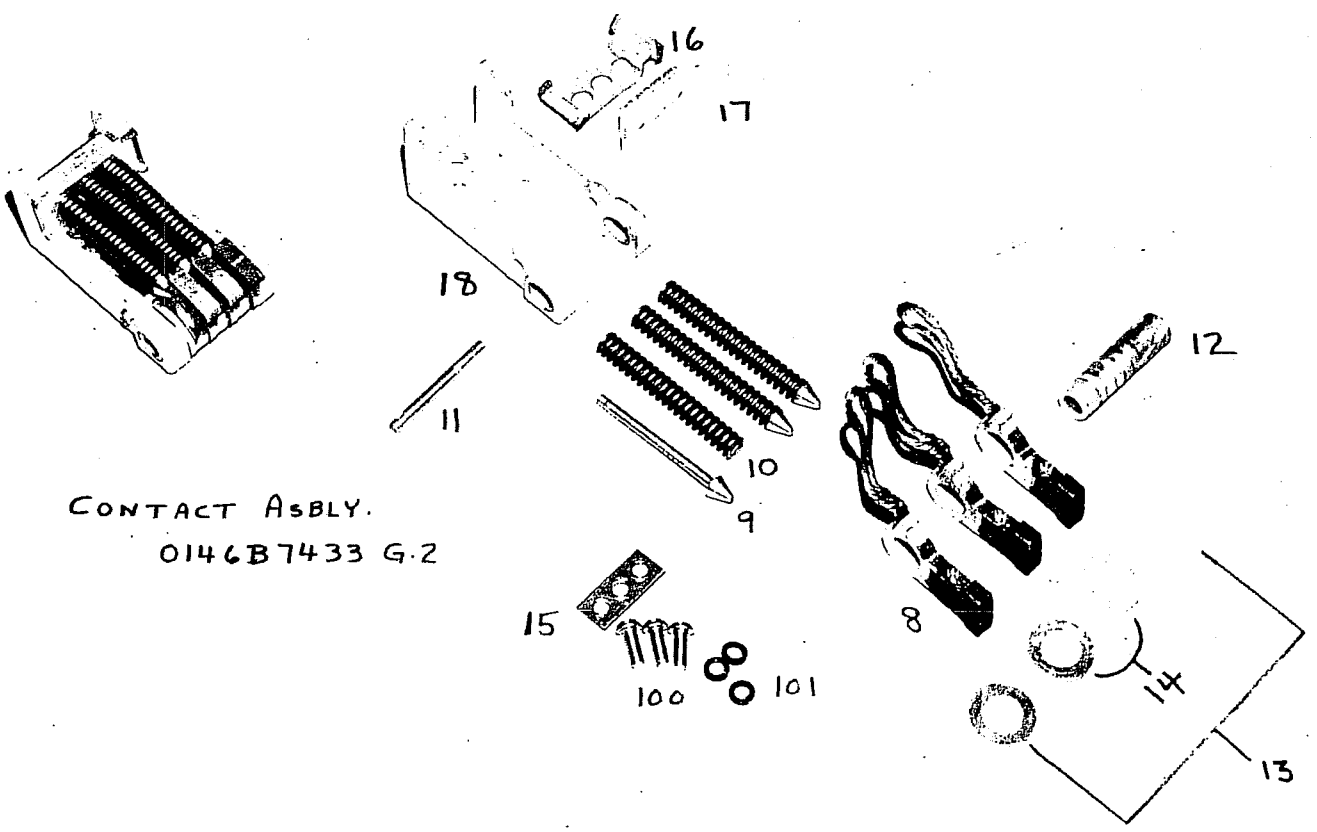

Figure 17 Identification Part Numbers - Contact Assembly

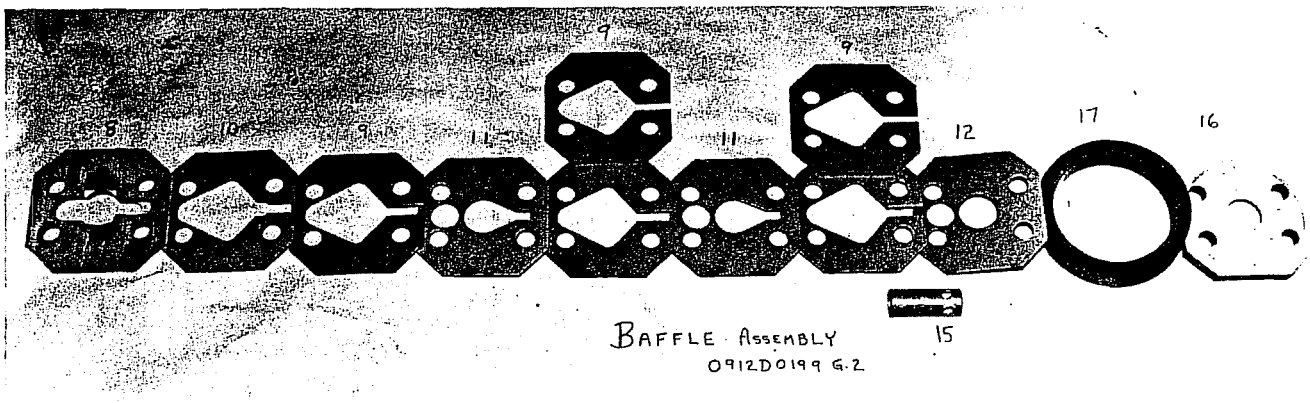

Figure 18 Identification Part Numbers - Baffle Assembly

All gasket surfaces shall be thoroughly cleaned to remove all oil, grease, or foreign material which will prevent proper adhesion of the gaskets, or sealing of the joints. They shall be allowed to become thoroughly dry before proceeding with treatment.

All surfaces to which gaskets are to be permanently assembled shall be given a full unbroken coat of GE #1201 compound. All gaskets (except rubber gaskets) for such joints shall be given a similar coat. This shall be done at such time in the assembly cycle that the compound will be allowed to dry at least one half hour before final assembly. A longer time, up to 24 hours, is not detrimental. In making up permanent joints, both the gaskets and gasket surfaces are again coated with GE #1201 compound and the parts bolted before the compound sets.

For joints such as covers, manholes, or places where the joint has to be opened, do not coat the gasket surface of the removable part or install this part until the compound on the gasket is perfectly dry. The side of the gasket to be assembled against the uncoated surfaces can be greased to prevent sticking.

PART 6

RENEWAL PARTS

It is recommended that sufficient renewal parts be carried in stock to enable prompt replacement of worn, damaged or broken parts. A stock of such parts minimizes the service interruptions caused by breakdowns, and saves time and expense. When continuous operation is a primary consideration, more renewal parts should be carried, the amount depending upon the severity of the service and the time required to secure replacements.

Renewal parts may not always be identical to the original parts, since improvements are made from time to time. The parts which are furnished, however, will be interchangeable.

When ordering renewal parts, address the nearest Sales Office of Canadian General Electric Company Limited giving the complete data shown on the breaker nameplate, such as the serial number, type and rating of the breaker. The breaker nameplate is mounted on the inside of the front door of the operating mechanism compartment. Also furnish a complete description of each part, the quantity required, and, if possible, the number of the requisition on which the breaker was originally furnished

PHR PLANT COPY.

FEDERAL PIONEER LIMITED

Instructions

FEDERAL PIONEER

INSTRUCTIONS

ONE - 5 KV INDOOR METALCLAD SWITCHGEAR

PETTY HARBOUR PLANT

NEWFOUNDLAND LIGHT & POWER CO. LTD.
P.O. #66768

FEDERAL PIONEER LIMITED #61-00-55947

CONTENTS

SECTION 100: TABLE OF CONTENTS

SECTION 200: GENERAL EQUIPMENT DESCRIPTIONS

1. #200 Station Operation
2. #201 Control Equipment Material List
   Drawing #W5239-A-6243 Sheet 3 of 3
3. #202 Power Equipment Material List

SECTION 300: INSTALLATION MAINTENANCE INSTRUCTIONS

1. C-3-620 Installation and Operation - Switchgear
2. C-3-443 Modifications to C-3-443
   DST - 2 Magnetic Air Circuit Breakers
   Type AEMG Stored Energy Mechanism
3. C-3-621 Instructions For Fitting Moulded Boots to Busbar Joints Sheet 1 of 2
   Instructions For Taping Bus-Joints Sheet 2 of 2

FEDERAL PIONEER INSTRUCTIONS

CONTENTS

SECTION 400: INSTRUMENT BULLETINS

C.G.E.	Type SB-1	Control and Instrument Switches
F.P.E.	DST-2	Table of Spare Parts
F.P.E.	NJL631200FDJ	Field Discharge Breaker
Westinghouse	Type CPL	Station Arresters
Westinghouse	Type DV	Surge Capacitors
Westinghouse	Type AV	Relay - Loss-Offield

SECTION 500: DRAWINGS

W5239-A-6243	Rev. 1	Drawing List Sheet 1 of 3
W5239-A-6243	Rev. 0	Wiring Devices & Notes Sheet 2 of 3
W5380-D-0144	Rev. 1	Front Elevation Sheet 1 of 3
W5380-D-0144	Rev. 2	Cross Section Sheet 2 of 3
W5380-D-0144	Rev. 0	Floor Plan Sheet 3 of 3
W5239-D-6243	Rev. 3	Power Schematic
W5239-C-6244	Rev. 1	Control Schematic
W5239-C-6245	Rev. 3	Control Schematic
W5239-C-6246	Rev. 1	Single Line Diagram
W5239-D-6285	Rev. 1	Wiring Diagram Cell 1
W5239-D-6286	Rev. 0	Wiring Diagram Cells 2, 4 & 5
W5239-C-6287	Rev. 0	Wiring Diagram Cell 3
W5239-C-6288	Rev. 1	Wiring Diagram Cell 6
W5239-B-2580	Rev. 4	Standard Wiring Diagram - PT Drawers
W5239-A-2762	Rev. 0	Description of Closing Circuit of DST2 Breakers
W5239-B-5752	Rev. 3	Wiring Diagram for DST2 Circuit Breake

FEDERAL PIONEER

FEDERAL PIONEER LIMITED

101 ROCKMAN ST·WINNIPEG·MANITOBA·R3T 0L7·PHONE (204) 452-7446
TELEX 07-57739

SECTION 200: #200

Newfoundland Light & Power Company Limited
P.O. #66768
Federal Pioneer Limited #61-00-55947

One - Indoor Metalclad Switchgear 5KV 250 MVA.

This equipment is located at PETTY HARBOUR, NEWFOUNDLAND.

The equipment has the following cell arrangement:

TOTAL OF 6 CELLS

3 - Generator Breaker Cells.

1 - Feeder Breaker Cell.

1 - Auxiliary cell containing Station Service Transformer, Bus P.T.'s, and Surge Protection.

1 - Auxiliary cell containing Field Discharge, Breakers and Associated Devices.

The Circuit Breaker Control involves auxiliary supplies as follows:

125 V DC For Closing
125 V DC For Tripping
125 V DC For Spring Charging Motor

5 KV SWITCHGEAR
CUSTOMER: NEWFOUNDLAND LIGHT & POWER.

SECTION 201

DEVICE	LINE No.	QTY	LOCATION	DESCRIPTION & CAT. No
AS	25	3	CELL-1	AMMETER SHUNT 200A 5KV. WESTINGHOUSE #SS850
E.R	35	1	CELL-1	EXCITER RESISTOR. CGE - 165A - 0.07 OHMS.
	40	1	"	" " " 165A - 0.14 OHMS.
	45	1	"	" " " 165A - 0.10 OHMS.
FDR	20	3	"	FIELD DISCHARGE RESISTOR. 165A. 1.12 Ω
FDC 41	15	3	"	FIELD DISCHARGE C/B FPE. TYPE NJL c/w MOTOR OPERATOR AND 125 V DC SHUNT TRIP. #NJL631200FDJ-RJ2-ASJ-1SJJ-2
41a	15	3	"	AUX CONTACT FOR FPE NJL C/B No. ASJ-1
41X	100	3	CELL-1	AUX RELAY. C.G.E. HFA 1142H SURFACE MOUNTED FRONT CONNECTED 125 V DC.
33	105	4	CELL-2,3,4,5	CELL SWITCH - C.G.E. SB1 - TO FPE W5239 A 1016
40	030	3	CELL-1	FIELD LOSS RELAY WESTINGHOUSE TYPE "AV"

(FOR FPE. SHOP USE ONLY)

FPE JOB NO./CONTRAT NO. 61-00-5-5947

MAT.
FIN.
SCALE/ CHELLE
DRAWN/ DESS. BAS DATE MAY-3-78
CHECKED CONTROLE DATE
APP. DATE
TOL. UNLESS OTHERWISE SPECIFIED. TOL. SI NON SPECIFIEES

TITLE/TITRE: BILL OF MATERIAL (INSTRUMENTATION ONLY)

DWG. NO./DESSIN NO. W5239A 6243 REV. 2
SHEET 3 OF 3

FEDERAL PIONEER
LOCATION OF ORIGIN L'ENDROIT D'ORIGINE WINNIPEG

REPRODUCIBLES AT						
E	G	Q	T	M	O	W
B	S	A	V	N	D	

FEDERAL PIONEER

FEDERAL PIONEER LIMITED

101 ROCKMAN ST•WINNIPEG•MANITOBA•R3T 0L7•PHONE (204) 452-7446
TELEX 07-57739

SECTION 200: #202

POWER EQUIPMENT MATERIAL LIST

Newfoundland Light & Power Company Limited
P.O. #66768
Federal PIoneer Limited #61-00-55947

BILL OF MATERIAL:

REF.	QTY.	DESCRIPTION
1	4	C/B - DST2-5KV/250MVA/2000A
2	4	F.P.E. - P/T Cradle
3	8	F.P.E. - P/T 2400-120Y
4	12	C.G.E. - EJ1-B Fuse 4.8KV 2E
5	1	F.P.E. - Fuse Cradle
6	3	C.G.E. - EJ1-D Fuse 2.4KV 40E
7	3	Whse. - Lightning Arrester CPL 3KV
8	1	Whse. - Surge Capacitor 3Ph.
9	2	Hammond Transformer 1 Ph. 37.5 KVA
10	1	F.P.E. - NEJ - 3 Pole 200A MCCB
11	3	C.O.B. Bushing R.S. 2000A 8.7 KV
12	9	Burndy - Cable Lug- NA39-2N
13	3	Stud Connector Type FD68T12-3-3
14	6	Cable Connector T&B Cat. #10469

CIRCUIT BREAKER:

Spring Charging Motor - 125 V DC
Spring Release Coil - 125 V DC
Shunt Trip Coil - 125 V DC

ADDITIONAL EQUIPMENT:

Racking Handle - 1
Winding Handle - 2
Slow Close Lever - 1
F.P.E. -- C/T 1800-5A 10L200 Shipped Loose - 9

ESTIMATED WEIGHTS:

Cell #1	1,000 lbs.
Cell #2, 4 & 5 without C/B @1,700 lbs. ea.	5,100 lbs.
Cell #3 without C/B @1,500 lbs. ea.	1,500 lbs.
Cell #6	1,850 lbs.
Bus Duct	950 lbs.
TOTAL	10,400 lbs.

PAINT:

Interior - ASA 61 Grey
Exterior - ASA 61 Grey

CURRENT TRANSFORMERS:

Cell #2, 4 & 5: Position "A"
Ratio 600-5A
Accuracy 2.5L200
Primary ½" x 1½" Cu. Bar
Quantity 9

Cell #3: Position "A"
Ratio 1800-5A
Accuracy 2.5L200
Primary 2½" x 2½" Cu. Bar
Quantity 3

Cell #2, 4 & 5: Position "B"
Ratio 600-5A
Accuracy 2.5L200
Primary ½" x 1½" Cu. Bar
Quantity 3

NOTES:

1. Main Bus Epoxy insulated: $\frac{1}{2}$" x 4" Cu. Bar - 2000 Amp.
2. Risers Epoxy insulated: 2 - 3/8" x 3" Cu. Bars - 2000 Amp.
3. Ground Bus $\frac{1}{4}$" x 2" Cu. Bar, bolted to Bosses, welded to Frame throughout Switchgear.
4. Insulated Barriers between cubicles made of Cast Epoxy.
5. Unit will be numbered from left to right.
6. Unit will be extendable at both ends.

CONSTRUCTION:

1. All Panels, Covers & Doors to be 11 GA. M.S.
2. Switchgear is built to Metalclad design as per C.E.M.A. Spec.
3. All Cable Terminations to be taped on site. Material supplied by Federal Pioneer Limited.

FEDERAL PIONEER | INSTRUCTIONS | C-3-620

June 1, 1976

INSTALLATION AND OPERATION – SWITCHGEAR

SHIPMENT

The switchgear is assembled, wired, adjusted and given complete tests at the factory, after which it is inspected and packed for shipment. The air circuit breakers are not shipped in the switchgear compartments, but are packed in separate crates. Each crate is identified, and a complete list of its contents is included in the shipping papers. All instruments and relays are suitably blocked to prevent damage to bearings and movements.

REMOVAL FROM CARRIER AND INSPECTION FOR DAMAGE

Immediately upon receipt of the shipment, identify all component parts and check them against the shipping list. Make a thorough examination to detect any damage which may have been incurred during transit. If any damage is discovered, file a claim immediately with the carrier, and send notice of the extent of the damage to the Federal Pioneer Limited plant from which shipment was made, giving complete identification, carrier's name and railroad car number if the shipment was made by rail. The information will enable the company to supply necessary information in support of claim.

MOVING AND LIFTING SWITCHGEAR

1. The importance cannot be overstressed regarding the care in handling, rigging, hoisting, rolling or moving assembled switchgear into place. Metal-clad switchgear is designed to be handled only in an upright position and should never be handled in any other way without first consulting with switchgear headquarters design section.

2. Each shipping section of indoor switchgear is bolted to shipping channels which should remain with the gear when it is moved into final location. Each section of outdoor gear is supplied with heavy lifting lugs bolted to switchgear base.

3. When lifting shipping units with a crane, it is preferable to use two hooks simultaneously, one on each end. Each pair of lifting hooks should be equipped with a spanner bar to prevent excessive distortion. If only a single hook crane is available, arrange spanner to lifting rig as shown on typical switchgear drawing, in the instructions.

4. When cranes are not available, equipment can be rolled into place on shipping channels provided with each shipping section. Pushing or pulling forces should be applied to the skid and not the switchgear.

5. Switchgear is split either longitudinally or laterally, and all parts will be marked for easy reassembly.

STORAGE BEFORE INSTALLATION

Protection against loss of equipment is an important precaution. Trouble and delay will be avoided by having good storage facilities arranged so that the apparatus will be accessible only to authorized persons and so that it can be quickly located when required in the erection program.

Switchgear equipment, regardless of whether it is to be installed immediately or stored for a while before being erected, should be kept in a dry, clean place. Conditions such as dampness caused by rain or change in temperature, cement dust, etc., should be carefully guarded against. Covering the equipment with a temporary shelter or tarpaulin is frequently necessary both during storage and erection. The longer the period of storage, the greater must be the care taken for protection of the equipment. It is advisable to place electric strip heaters or lamps within enclosures to raise temperature approximately 10 degrees above outside temperature at all times.

Crated apparatus which is not to be erected immediately will store much better if left crated. It should, however, be inspected to make sure that no damage has been incurred during transit.

When arrangements are made prior to shipment, electric strip heaters circuit can be taken out of crate so that heaters can be energized while switchgear equipment remains in the crates.

ALIGNMENT OF FOUNDATION

Federal Pioneer metal switchgear is accurately built on true and level bedplates. This care and accuracy insures ease of operation and interchangeability. Equal care in installation should be used.

A true and level floor for this equipment is of utmost importance. A little more than ordinary care in laying out and preparing the foundation will be repaid in reduction of cost and labor of installation.

The steel supporting members used in the floor should be held level until the concrete is set. The surface of the floor under the housing should not project above the supporting member.

INSTALLATION AND OPERATION — SWITCHGEAR

The floor in front of the housing should not vary more than ⅛" in any square yard and must not project above the level of the supporting members. The better this floor is finished the easier will be the rolling of the removable breaker unit.

When installing metal-clad switchgear on existing floors it will usually be desirable to pour a new finish floor with embedded channels or cut slots for embedding and leveling the supporting channels.

Encircling loops of reinforcing or building steel around single phase conductors should be avoided in the areas marked for main cables — when these circuits are rated at 600 amperes or above.

GETTING READY FOR SERVICE

Careful reference should be made to each component instruction leaflet before attempting to place the switchgear in service. If dry-type or oil or silicone-filled power transformers are furnished as part of the switchgear equipment, consult their instruction books or leaflets, particularly regarding absorption of moisture, and effects of dust and sand, etc.

Any indication of moisture will require that equipment be dried out before placing in service. Care should be exercised in drying-out operations to be certain that the maximum temperature during the drying period does not exceed 70 to 75 degrees centigrade on switchgear. In the event it is desired to give the equipment a high potential test before placing in service, this test should only be made after the equipment is thoroughly dry, allowing approximately 10 days drying time. The value of test voltage should correspond to the voltages listed below.

DIELECTRIC TESTS

The following dielectric tests shall be made to determine the adequacy of insulation. Devices used as part of switchgear assemblies shall be capable of meeting the following dielectric tests.

Exception: there is certain apparatus such as potential transformers, auto transformers, motor starting reactors, and motor-operated devices the standards for which call for lower test voltage than those given below. When such devices are used, they may be disconnected during these tests.

Alternating-current test voltage shall have a crest value equal to 1.41 times the values specified. A sine wave shape is recommended. The frequency shall not be less than the rated frequency of the apparatus tested. The test voltage shall be applied for one minute.

Direct-current test voltage, if used in lieu of alternating-current test voltage, shall be 1.41 times the specified alternating-current voltage.

A. Equipment Rated 60 Volts and Below

That part of assembled equipment rated 60 volts or less shall withstand an alternating-current voltage test of 500 volts.

B. Equipment Rated 61 to 600 Volts

Alternating-current assembled equipment and alternating-current circuits of equipment of higher rated voltage rated 61 to 600 volts shall withstand an alternating-current voltage test of 1000 volts plus twice rated voltage, with a minimum of 1500 volts. Factory Test. When assembled in field and connected, test voltages should be 75% of factory test value.

C. Equipment Rated 601 to 2399 Volts — Alternating Current

Alternating-current assembled equipment rated 601 to 2399 volts shall withstand an alternating current voltage test of 2000 volts plus 2¼ times rated voltage. When assembled in field and connected, test voltages should be 75% of factory value.

D. Equipment Rated 2400 Volts Alternating-Current and Above

Rated Voltage KV	60 Cycle KV Field Conn.	60 Cycle KV Factory	Standard Full-Wave Impulse (Withstand) Tests KV
2.4	11.25	15	45
4.16	14.25	19	60
7.2	27.0	36	95
12	27.0	36	95
12.47	27.0	36	95
13.8	27.0	36	95
23	45	60	125
34.5	60.0	80	150

FEDERAL PIONEER

INSTRUCTIONS

June 1, 1976

TALLATION AND OPERATION – SWITCHGEAR

quipment should be checked to be certain no or any other equipment have been left in the igear. When connections are to be made to or on Electric Utility, public or privately owned, ılt their representatives very early in the con- rion period, as many of them have very strict rements which must be met before service con- ons will be made.

RATIONAL TESTING

n completion of installation, and inspection of circuit breakers and other components, together ı installation of any incoming and outgoing con- connections, it is time to start operational test- . Outgoing feeder cables should not be connect- at start of test.

ıt is a Power Center with Power Transformer and gh-voltage disconnect or interrupter switch ahead the switchgear, lock the switch in the open posi- ın in order to protect the test operator.

milarly if it is a generating station, the generator 'eaker should be locked open.

there are low voltage manual breakers, they may e checked in "test" and "operate" positions. Ex- reme care should be taken that all contacts and ıousing switches (if any) align properly.

When the switchgear has electrically operated cir- cuit breakers, they are operated in some installa- tions from local battery or auxiliary control supply, and in other installations are operated from the switchgear bus, or a connection ahead of the incom- ing master circuit breaker. In the event the primary source of power is locked open, it will be necessary to use an auxiliary source of power to operate the circuit breakers, lamps, bell-alarm switch, under- voltage devices, rectifiers, capacitor shunt trips, etc. Check circuit breakers in "test" and "operate" po- sitions, paying particular attention to good contact between movable and stationary secondary contacts in both positions. Key interlocks should be operated manually to make sure that protection is complete. Remove spare keys to supervisory office.

Each relay and trip device or other component should be operated manually to be certain its con- tacts perform their required function. Remove any material that was installed at the factory to block relay contacts during the shipment. Preliminary set tings for test purposes should be applied to relays The various operational functions are indicated o the schematic and wiring diagrams of the switch gear equipment.

After completion of all operational tests, all rela should be set. All trip indicators on the relays shou be checked to see that they function properly.

Upon completion of device settings and tests, t main incoming and feeder cables should be prope phased out and connected to the switchgear. coming and outgoing cables should be braced so to take mechanical strain off studs of circuit bre ers and porcelain supports of various types.

The entire switchgear structure should be caref vacuum cleaned (preferred) or blown out, and rear and side plates that have been removed sh be rebolted in place. All secondary and power nections should be tested for grounds with high tential tester or merger. Megger readings of megohm per thousand volts is acceptable. If r ings are lower, equipment should be dried out insulation resistance values improve to one me per thousand volts. Preferable readings are:

Operating Voltage KV	1.2	2.5	5.0	8.66
Insulation Resistance Megohm at 25° ...	12	25	50	150

FEDERAL PIONEER

FEDERAL PIONEER LIMITED

101 ROCKMAN ST·WINNIPEG·MANITOBA·R3T 0L7·PHONE (204) 452-7446
TELEX 07-57739

MODIFICATIONS TO C-3-443
DST - 2 MAGNETIC AIR CIRCUIT BREAKERS
5 KV AND 15 KV

1. Page 4, Section 1-3, Line 3:

"cell" should read "wheels".

2. Page 8, Section 6.1-3:

Requires the following Modification:

(i) 6.1.3 (d) should be removed and replaced with the following:

(d) Adjust the moving arcing contacts, making sure that all 3 poles close simultaneously. The gap between the fixed and moving main contacts when the arcing contacts first touch should be as follows:--

8mm (.315 inch) for DST 2 5/250

11mm (.433 inch) for DST 2 15/500
(Pages 22 and 23)
6mm (.236 inch) for DST 2 5/350 and 15/750
(Page 23)
Contacts may be slowly closed using the appropriate manual closing device as described on pages 24, 25 and 26.

Tollerance on dimensions are +1 -0.5mm.

(ii) 6.1.3 (e) should be removed and replaced with the following:

(e) Close the circuit breaker and adjust the length of springs to dimensions shown in Fig. 4c
11mm (.433 inch) for DST 2 15/500
14.5mm (.570 inch) for DST 2 5/250 ; 5/350 & 15/750

Tollerance on dimensions are +1 -0.5mm.

...2

FEDERAL PIONEER LIMITED

3. Page 8, Section 6.1.4:

Requires the following modifications:

Dimensions or Figure 4c should be modified to show
11mm for 15/500
14.5mm for 5/250 5/350 and 15/750

Tollerance on dimensions +1 -0.5mm.

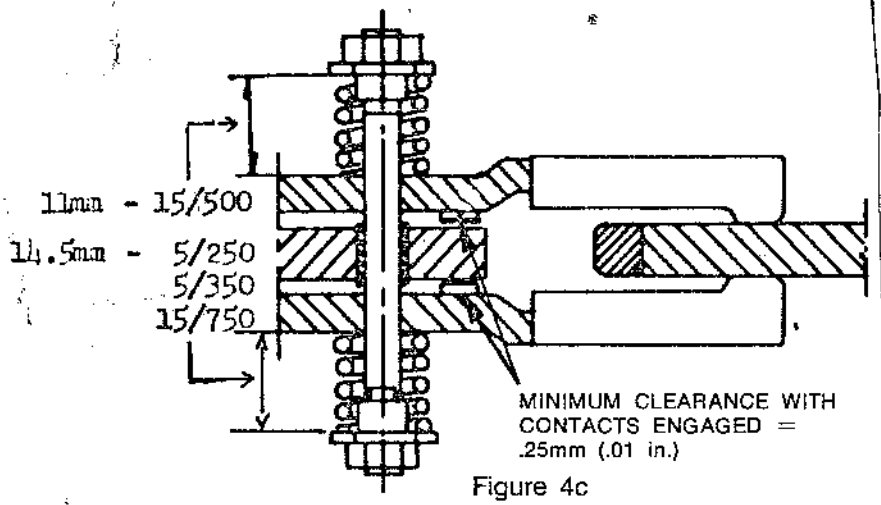

Figure 4c

4. Page 8, Section 6.1.5:

Pharagraph C should be revised as follows:

(c) Adjust the main contact springs so that the length is 10mm (.40 inch) when the contacts are closed.

Tollerance on dimensions are ±0.5mm.

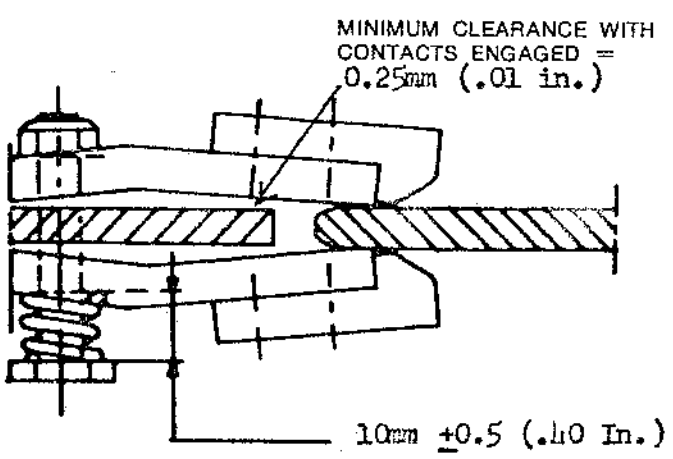

Figure 5a

...3

FEDERAL PIONEER LIMITED

5. Page 10, Figure 7:

Should be modified as follows:

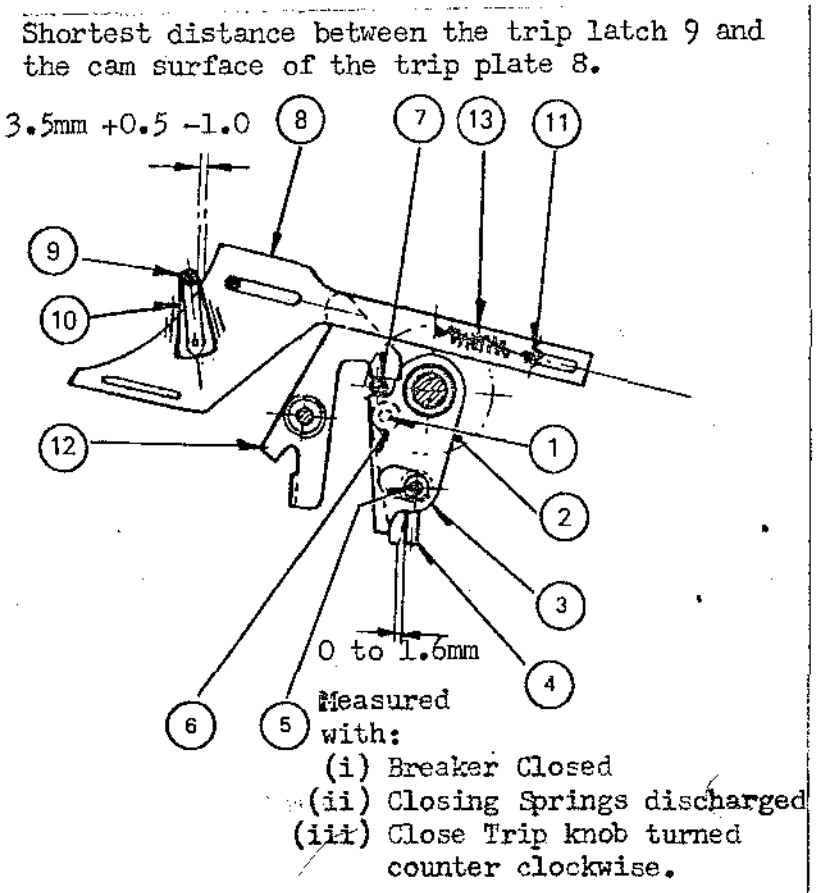

Figure 7.

6. Section 1.3.1 (a) should read:

Looseness at the eccentric (6) fig. 7, Page 10 - adjust as instructed in 1.4.1

7. Section 1.4.1 pharagraph (a) and (b) should be replaced

Pharagraph (a) and (b) should be replaced with the following:

(a) Loosen screw (1) slightly.

(b) Turn knob (2) counterclockwise until the clearance between the lever (3) and the pin (4) of trip bar (5) is between 0 and 1.6mm.

:DERAL PIONEER LIMITED

...4

8. Section 1.4.2:

Pharagraph 1 should be replaced with the following:

1.4.2 Checking the Trip Bar (8) for Opening the Breaker (Fig. 7) (Page 10)

When the breaker is closed, the clearance between the pin (9) of the trace trip lever L10) and the trip rod (8) actuated by the knob (2) is to be between 2.5 and 4.0mm. Should this clearance be shorter, the pin (9) would hit the trip bar (8) thus tripping the breaker.

9. Page 23, Figure 12:

The "C" dimension for DST 2 5/250 reads 11mm and should read "8mm".

The "A" dimension should read:

98mm	+3 - 1mm	for DST 2 5/250
106mm	+2 - 6mm	for DST 2 5/350
150mm	+2 - 6mm	for DST 2 15/500(3000) and DST 2 15/750

The "B" dimension should read:

8mm	$\pm$1mm	for DST 2 5/250
20mm	$\pm$2mm	for DST 2 5/350
30mm	$\pm$2mm	for DST 2 15/500 (3000) and DST 2 15/750

10. Page 17:

The Test Cabinet Assembly Drawing No. W5281-B-0935 is now W5281-P-1450-A-E

FPE	DST - 2 MAGNETIC AIR CIRCUIT BREAKERS 5 KV and 15 KV	C-3-443
		JANUARY 1972

INSTRUCTION MANUAL

FPE-PIONEER ELECTRIC LIMITED
PIONEER ELECTRIC DIVISION

TABLE OF CONTENTS

PART I — GENERAL INFORMATION

1. Introduction . . . 3
1.1 Foreword . . . 3
1.2 General Description . . . 4
1.3 Construction . . . 4
1.4 Features . . . 4
2. Shipping . . . 4
3. Inspection . . . 5
4. Storage Prior to Installation . . . 5
5. Installation . . . 5
5.1 Preliminary Operations . . . 5
5.2 Safety Precautions . . . 5
5.3 Mechanical Checking . . . 5
5.4 Installation . . . 5
5.4.1 Lifting . . . 5
5.4.2 Arc-chute Fitting . . . 5
5.5 Racking Operations . . . 6
5.6 Manual Checking of Operating Mechanism . . . 6
5.7 Electrical Checking of Operating Mechanism . . . 6
5.8 Connections . . . 6
5.8.1 Copper Connections . . . 6
5.8.2 Aluminum Connections . . . 6
6. General Maintenance . . . 7
6.1 Periodical Inspection . . . 7
6.1.1. Arc-chute Inspection . . . 7
6.1.2 Arcing Contact Inspection . . . 7
6.1.3 Replacement and Adjustment of Arcing Contacts . . . 7
6.1.4 Main Contact Inspection . . . 8
6.1.5 Main Contact Replacement . . . 8
6.2 Operating Mechanism Maintenance . . . 8

PART II — DETAILED MAINTENANCE PROCEDURES

1. Operating Mechanism . . . 9
1.1 Characteristics . . . 9
1.2 Principles of Operation . . . 9-11
1.3 Trouble Shooting . . . 11
1.3.1 The Breaker Cannot be Closed . . . 11-12
1.3.2 Troubles in the Spring Charging Motor or the Pitch Chain . . . 12
1.3.3 The Breaker Cannot be Opened . . . 12
1.4 Checks and Adjustments . . . 12
1.4.1 Adjustment of the Closing Spring Mechanical Lock . . . 12
1.4.2 Checking the Trip Bar for Breaker Opening . . . 12
1.4.3 Checking the Closing Release for Closing the Breaker . . . 12
1.4.4 Adjustment of the Clearance between the Ratchet Pawl and the Sprocket Wheel to Prevent Overstressing the Pitch Chain . . . 12

PART III — APPENDIX

1. Schedule of Maintenance . . . 13
2. Fitting the Operating Mechanism to the Breaker . . . 13
3. Fitting, Replacement and Adjustment of the Trace . . . 14
4. Replacement of the Closing Spring . . . 14
5. Control Power Requirements . . . 15
6. Accessories . . . 16-17
7. Spare Parts . . . 18-20
8. Contact Settings . . . 22-23
9. Manual Close Lever Fitting . . . 24-26
10. Secondary Disconnects . . . 27-29

PART 1 – GENERAL INFORMATION

1 INTRODUCTION

1.1 FOREWORD

Pioneer Electric Company apparatus is built to the highest standard of quality to insure continuous reliable service with a minimum of maintenance. Such routine preventative maintenance is, however, required on semi- or bi-annual basis in accordance with the various uses of the product. It is suggested that, due to the precision craftsmanship involved in the construction of this apparatus, no attempts (with the exception of few minor adjustments) should be made by the customer to fix or adjust clearances.

Should the need occur, the Field Service Department of Pioneer Electric is equipped to assist you with any maintenance or repair which may occur throughout the anticipated long life of this equipment.

For further information regarding service, please contact your local Pioneer sales office or Winnipeg plant.

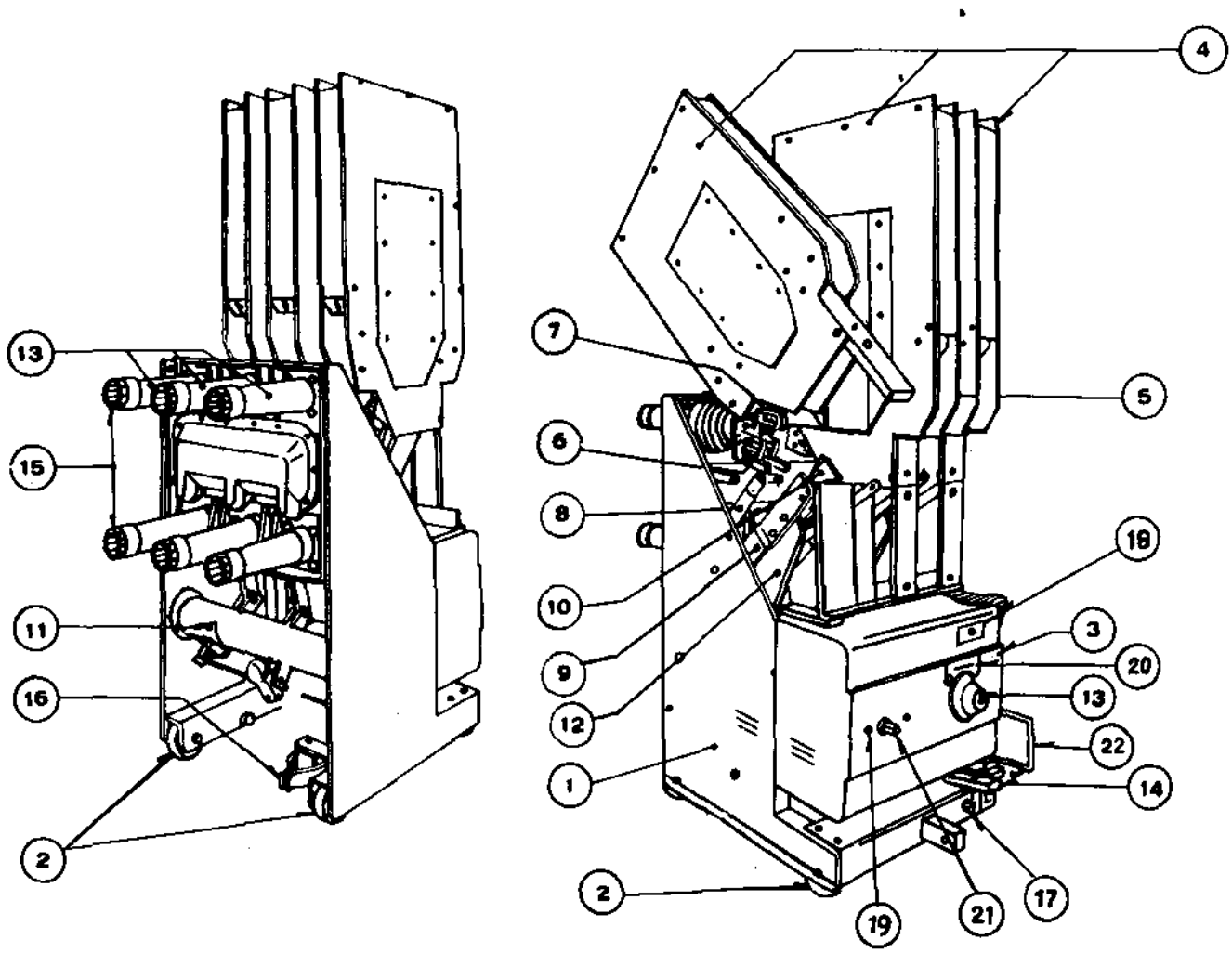

Figure 1

1.2 GENERAL DESCRIPTION *(Figure 1, Page 3)*

The DST 2 Magnetic Air Circuit Breaker is electrically operated, horizontal drawout for indoor and outdoor metal-clad switchgear.

It is composed of three separate poles supported by a welded steel frame (1) and provided with wheels (2) so it can be easily moved in and out of its cell.

Each pole consists of two separate parts: (Figure 1, Page 3)

(a) Arc-chute (4) — is a chamber filled with ceramic baffles. It has a magnetic structure that forces the arc into constrictions provided by the baffling. The magnetic field is generated by electro-magnetic coils within the arc chute (5) (Fig. 1). Cooling and elongation of the arc within the baffle structure forces quick extinction of the arc.

(b) Contact unit — is made up of the main contacts, fixed (6) and moving (9) and by the arcing contacts, fixed (7) and moving (10).

The main contacts of silver plated copper, carry the normal service current. They are not affected by the interruption since they open before separation of the arcing contacts occur.

The fixed and moving arcing contacts are made with tungsten-copper arc resistant inlays and are capable of withstanding the high short circuit current without damage.

The puffer nozzles (8) are located under the fixed contacts.

The moving contact group is operated by the shaft (11), through the insulated material linkage (12). The metal frame is grounded through the ground contacts (16).

A welded sheet steel front barrier is grounded thus assuring safety to operating personnel (1) (Fig. 2, Page 5). The contact structures are separated with insulated interphase barriers.

The breaker can be either manually operated by means of a knob (13) or remotely operated.

The detachable spring closing mechanism is designed for medium voltage breakers. This is a motor charged spring mechanism. The mechanism is completely enclosed for safety during the closing operation and during the normal maintenance (3) (Fig. 1). This enclosure also excludes dirt and dust.

1.3 CONSTRUCTION

The DST-2 is a drawout type breaker. It is built to allow ease in maintenance and operation. The breaker is available complete with cell suitable for inserting into a metal-clad breaker cell. The breaker can be positioned as follows:

1. "Connected" position — where main and secondary contacts are automatically connected.
2. "Test"-position ("Isolated" position) — where main contacts are disconnected and secondary contacts can be manually connected or disconnected.
3. "Disconnect" position where main contacts and secondary contacts are automatically disconnected. (See Pages 27-29.)
4. Removed from the cell, by operating the "racking in" lever. It is also provided with a pedal operated interlocking device (14) (Fig. 1, Pg. 3).

The breaker is connected to the stationary portion by means of movable primary disconnects (15) (Fig. 1) coupling with the stationary primary disconnect embodied in the insulated bushings fitted to the stationary cell.

When the breaker is in "Test Position" or drawn out of the cell, the cell shutter, operated by racking action of the breaker, covers the live parts giving adequate protection to personnel.

1.4 DST-2 FEATURES

All breakers are equipped with the following parts and provisions.

(1) Arc-chutes (4) (Fig. 1) (Page 3)
(2) Barrier (1) (Fig. 2) (Page 5)
(3) 6 Unit auxiliary switch with contacts (a) and (b)
(4) lockout switch. (Blocks closing and motor circuits) (17) (Fig. 1) (Page 3)
(5) latch check switch (b) (Fig. 5) (Page 8)
(6) 1 Mechanical operation counter (counts close operations) (18) (Fig. 1) (Page 3)
(7) "X-Y" relay (c) (Fig. 5) (Page 8)
(8) TC trip solenoid (d) (Fig. 5) (Page 8)
(9) Charging motor (e) (Fig. 5) (Page 8)
(10) Electrical indication of "Charge" and "Discharge" and "Open" or "Closed".
(11) Mechanical indication of "Open" and "Closed" (20) (Fig. 1) (Page 3)
(12) Mechanical indication of "Charged" and "Discharged" (19) (Fig. 1) (Page 3)
(13) Mechanical drawout interlock (prevents movement of breaker in or out of cell with contacts closed) (14) (Fig. 1) (Page 3)
(14) Mechanical interlock (prevents inserting or removing breaker from cell when operating spring is charged.
(15) Padlock provision. (Lock breaker tripped with pedal down or lock to prevent racking in or out with pedal up) (14) (Fig. 1) (Page 3)
(16) Provision for manual charging of springs (21) (Fig. 1) (Page 3)
(17) Manual trip — close control knob (13) (Fig. 1) (Page 3)
(18) Automatic secondary contacts in "Operating" position side Mtd (Page 29)
(19) Automatic secondary contacts in "Operating" and "Test" positions Front Mtd (Page 28)

2 SHIPPING

All circuit breakers are assembled and tested for optimum performance in the factory before shipment. Shipment is made in two (2) crates. The basic circuit breaker on its truck with interphase barriers is in one (1) crate. The three (3) arc-chutes are packed in a second crate.

The serial number of each circuit breaker is on its nameplate and also marked on the circuit breaker crate.

A copy of the packing list enclosed in a waterproof envelope is nailed on the outside of the circuit breaker crate. Only one envelope is furnished with orders for more than one circuit breaker shipped to a single destination.

Each circuit breaker, in its crate, is enclosed in a polyethyelene dust-and-moisture-proof envelope.

3 INSPECTION UPON RECEIPT OF SHIPMENT

When a shipment of circuit breakers is received, each circuit breaker should be examined before it is removed from the railroad car or truck. If any damage or indication of rough handling is evident, a description of the condition should be written on the freight bill, a claim should be filed against the carrier immediately, and notice of the extent of damage sent without delay to the company at the address of the company from which shipment was made, giving serial number of the breaker, the carrier's name, and the car number if shipped by rail. This information enables the company to supply needed information to assist the purchaser in support of the claim.

4 STORAGE

A breaker could be safely stored provided that the following instructions are observed:

(a) Handle the breaker with the utmost care, hoist it using a tackle or similar means and attach the sling hooks to the holes on the sides of the breaker.
(b) Upon receipt of the breaker an inspection should be made. Then release the closing springs and if possible, store the breaker and arc-chutes in their cases until actual installation.
(c) Keep the breakers in a dry place, protected against dust and chemical agents.

5 INSTALLATION

5.1 PRELIMINARY OPERATIONS

Before setting a breaker into operation, the following operations should be carried out:

(a) Carefully clean all parts of the breaker with a dry cloth.
(b) Check the condition of contacts and terminals. The main contacts are to be coated with a thin layer of contact lubricant while terminals and arcing contacts are to be cleaned with a solvent.
(c) Tighten all the parts listed in Appendix 1.

5.2 SAFETY PRECAUTIONS

The following checks should be made before installing a breaker in the cell:

(a) Check the contact between the ground contact (16) (Fig. 1) (Page 3) and the grounding blade located on the cell floor.
(b) Check if the contacts and arc-chutes are properly positioned. The moving contacts must separate simultaneously and touch the fixed elements at the same time, when the breaker closes. (See below 6.1.3, 6.1.4, 6.1.5 for contact adjustment procedure) Page 7 & 8)
(c) Check all connections and phase connections, especially in power circuits.
(d) Never rack the breaker into the "operate" position without the arc-chutes and dead front barriers.

5.3 MECHANICAL CHECKING

Each circuit breaker is carefully inspected and operated at the plant before shipment, yet it is advisable to carry out some closing and opening operations before putting a breaker into service. Remove the arc-chutes and dead front barriers and follow the instructions for checking operational performance.

5.4 INSTALLATION

5.4.1 Lifting

Lifting is to be done as described in Section 4 (a). Handle the breaker with the utmost care, lift it using a tackle or similar means and attach the sling hooks to the holes on the sides of the breaker.

5.4.2 Arc-chute Fitting (Fig. 2)

Before fitting the arc-chutes make sure there is no foreign matter inside them. Then:

(a) Remove screws (2) and remove the safety interphase barrier (1).
(b) Keeping the arc-chute (5) inclined toward the bushings, fit the conductor pin (3) to seats (4).
(c) Rotate the arc-chute downwards until plates (6) are fitted to stud (7)
(d) Fix the arc-chute by means of nuts on studs (7), making sure that the connector (8) is outside the arc-chute.

Note: A lifting yoke is provided for the breakers arc-chute to facilitate handling.

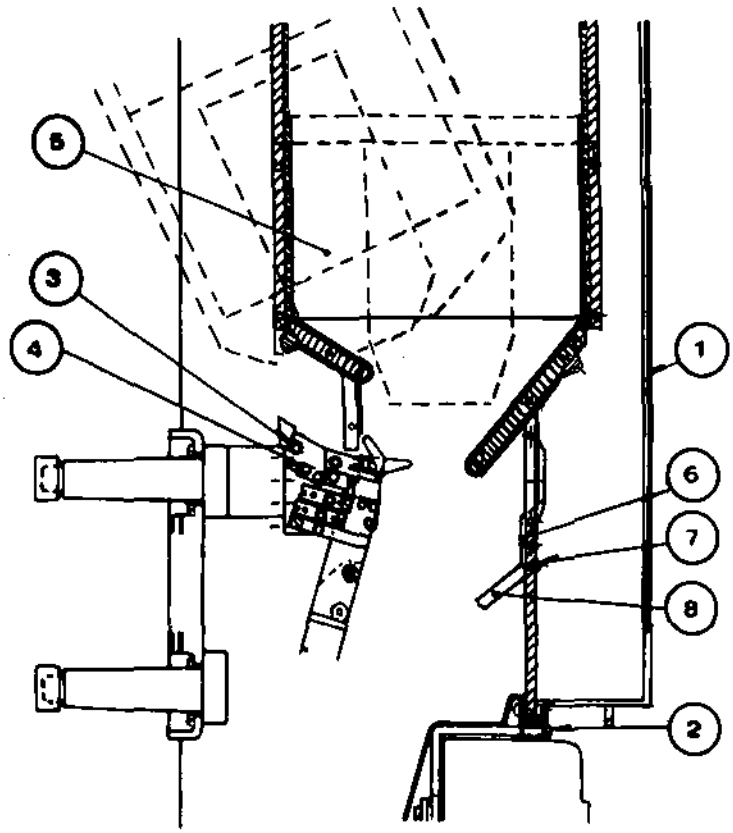

Figure 2

5.5 RACKING OPERATIONS (Fig. 3a, 3b, 3c), (Page 8)

(a) Place the breaker on the rails and make sure that it moves freely.
(b) Move the breaker to the "Test Position" or "Disconnect" position using the racking lever, as shown in Figure 3a. Shift it back and forth until you hear the clicking sound of the lock engaging the draw out interlock rail.
(c) Rack the breaker in; do the same operations as above after releasing the locking device (1) by pressing the pedal (2) (Fig. 3c). Pressing the interlock pedal will trip the breaker if closed. Reset the lockout switch after pressing interlock pedal to permit electrical operation.
(d) Rack the breaker out; place the lever as shown in (Fig. 3b) and perform the same operations as above.

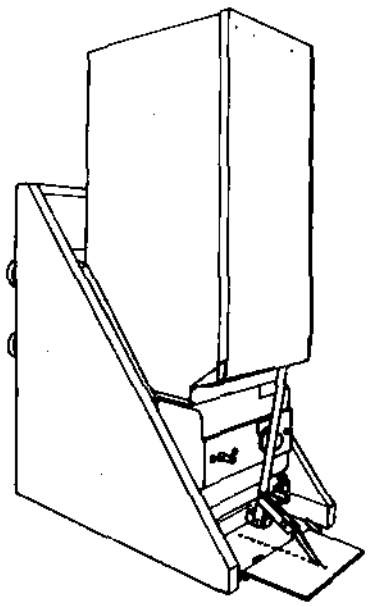

Figure 3a

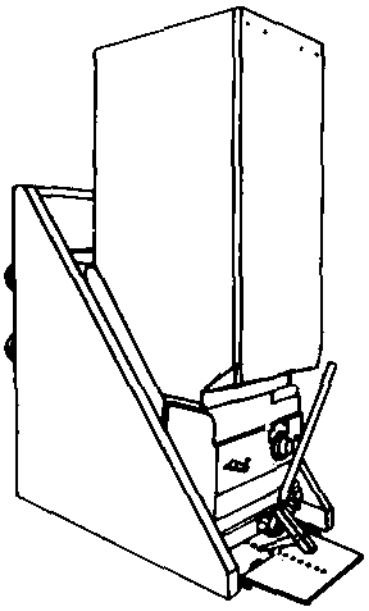

Figure 3b

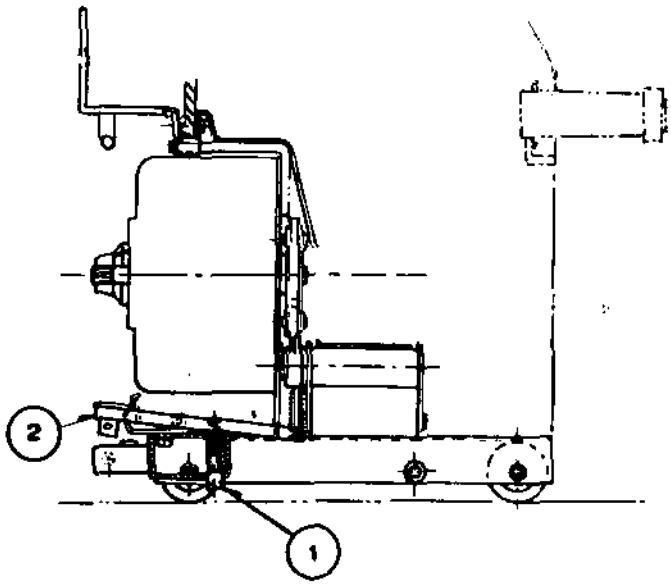

Figure 3c

5.6 MANUAL CHECKING OF OPERATING MECHANISM

Charge the closing springs by means of manual charging handle then close and trip the breaker manually. Check mechanical operating of the mechanism. The breaker should operate smoothly and freely without any indication of binding.

Check that the supply voltage agrees with the breaker nameplate and is between 85 percent and 110 percent of rated voltage.

It is suggested that several mechanical closing and opening operations be performed.

5.7 ELECTRICAL CHECKING OF OPERATING MECHANISM

The circuit breaker may be electrically operated safely in the cell in the "Test" position. Move the breaker into the cell until the interlock bar drops into the first notch. This is the test position. The shutter should remain down isolating the breaker from the high voltage bus. The secondary circuit is completed by manually pushing the secondary contact operating handle (right side of breaker frame) all the way in. Reset the lockout switch by lifting the toggle handle. Close and trip the breaker several times from the control switch. After each closing operation the motor will recharge the operating springs (approximately 10 seconds).

5.8 CONNECTIONS

5.8.1 Copper Connections —

Bus or Cable Connections to Switchgear.

Check the contact surfaces of the bolted connections to insure they are free from burrs or deformation resulting from drilling or handling. Burrs or high spots should be eliminated with a fine file without removing the silver layer from non-dented surface.

Clean the terminal contact surfaces with solvent, to insure a good contact then tighten the bolts.

5.8.2 Aluminum Connections —

Bus or Cable Connection to Switchgear.

Check the contact surfaces of the bolted connections to insure they are free from burrs or deformation from drilling or handling. Remove high spots and burrs with a fine file. Clean with solvent and coat the contact surfaces with non-oxide grease. Tighten the bolts using a Belleville washer.

6 GENERAL MAINTENANCE

6.1 PERIODICAL INSPECTION

A schedule for maintenance of a breaker in service is included in Appendix No. 1. In addition to the listed operation it is necessary to carefully clean the breaker at least every six months.

The contacts and arc-chutes should be frequently and carefully inspected, as instructed in 6.1.1 - 6.1.5, if the breaker has been subjected to frequent operations on short circuits or overload.

The breaker and in particular the operating mechanism should be frequently inspected if the breaker has been subjected to dust, dirt and corrosive industrial atmospheres.

6.1.1 Arc-chute Inspection (Fig. 2) (Page 5)

Draw the breaker out, remove the safety barrier (1) as instructed in No. 5.4.2, loosen the nuts of studs (7), rotate the arc-chutes by rotating around pins (3) then check the conditions of the arc-chute plates.

If any breakages or flaws on arc-chutes or splitter plates or burning on blow-out coils are found, it is advisable to replace the arc-chute. Replacement arc-chutes may be ordered direct from the factory, or parts can be replaced by Pioneer field personnel.

6.1.2 Arcing Contact Inspection

Draw the breaker out, remove the interphase barrier and arc-chutes as described above (6.1.1).

The arcing contacts should be reasonably clean, without pittings and deformations. Small pittings can be filed without modifying the shape of the contacts. In normal use, when currents of approximately the rated value are being interrupted, the arcing contacts might be slightly worn; replacement, however, is unnecessary.

In more severe service conditions, if an appreciable wear is noticed, the arcing contacts should be replaced as described in 6.1.3.

Appendix No. 1 indicates the maximum number of operations the breaker should be expected to perform without replacement of the contacts.

6.1.3 Replacement and Adjustment of Arcing Contacts (Fig. 4) (Page 7)

Draw the breaker out, remove the interphase barrier and arc-chutes (Fig. 2). Replace the arcing contacts as follows:

(a) Open the breaker and discharge the closing springs.

(b) 5KV — Remove nut from contact pivot pin and remove pin. Remove spring pin retainer and spring pin. Remove 2 shunt screws and remove moving arcing contact. Install new contact in reverse procedure.
15KV — Remove 3 studs securing moving arcing contact to the blades. Install new contact making certain that nuts are securely tightened.

(c) Remove stationary arcing contact springs (5) (Fig. 4) by removing adjusting nuts and stud.

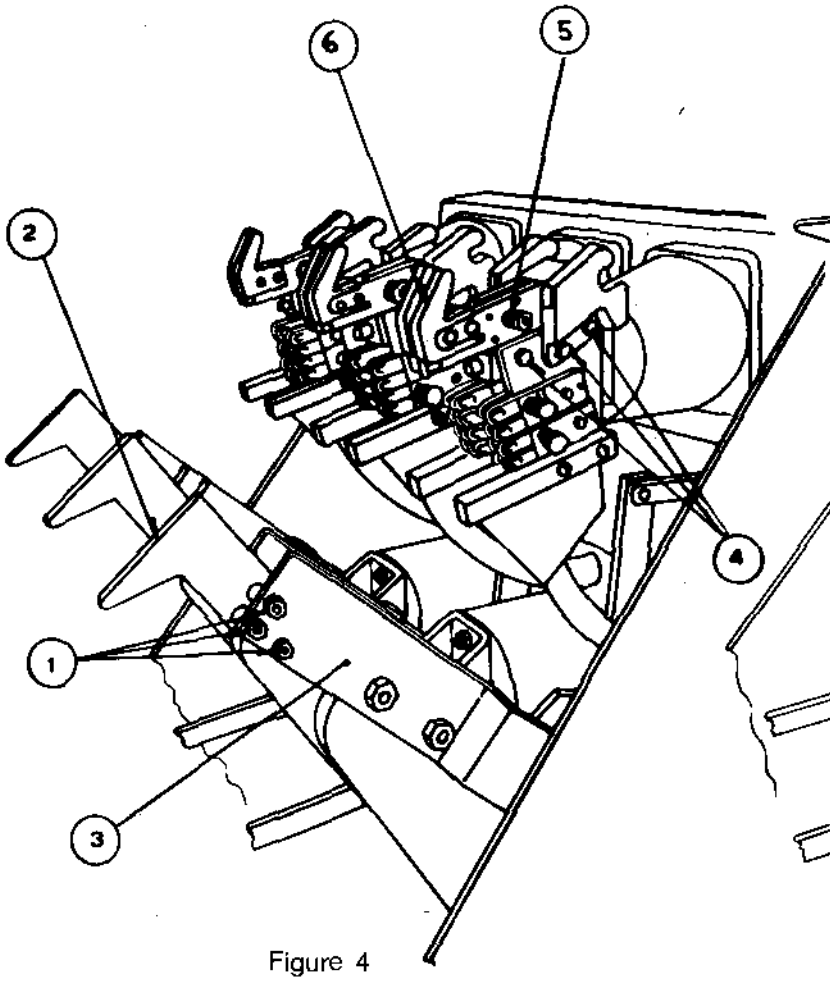

Figure 4

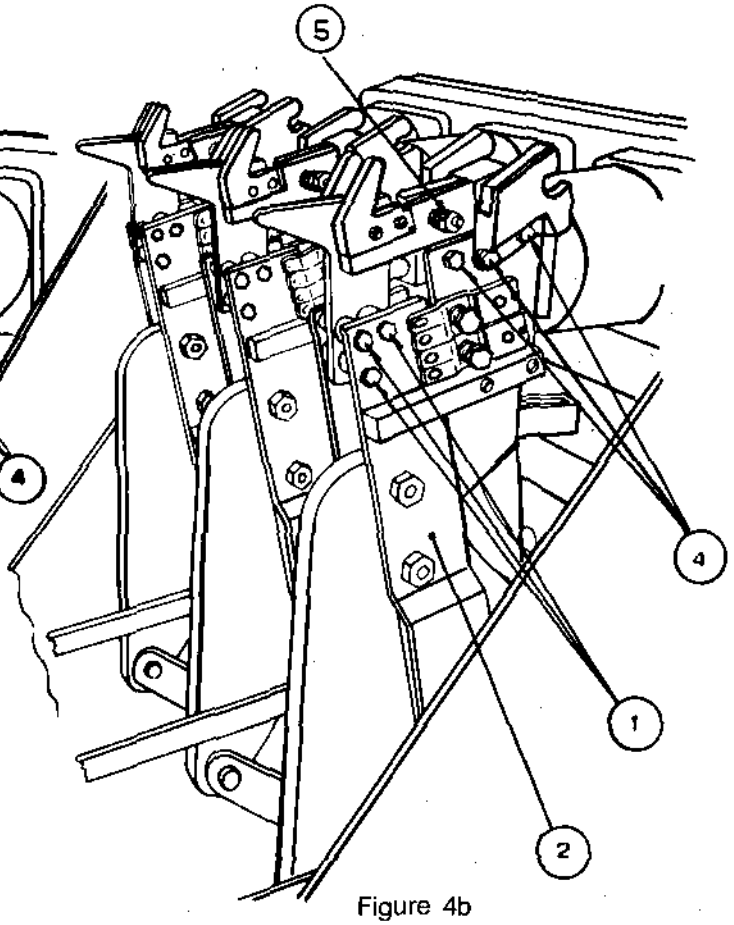

Figure 4b

Remove upper shunt screw. Remove arcing contact assembly, replace shunt onto new arcing contacts and install in reverse procedure.

(d) Adjust the moving arcing contacts, making sure that all 3 poles close simultaneously. The gap between the fixed and moving main contacts when the arcing contacts first touch should be as follows:—
11mm (.433 inch) for DST 2 5/250 and 15/500 (Pages 22 and 23)
6mm (.236 inch) for DST 2 5/350 and 15/750 (Page 23)
Contacts may be slowly closed using the appropriate manual closing device as described on pages 24, 25 and 26.

(e) Close the circuit breaker and adjust the length of springs to dimensions shown in Fig. 4c
11mm (.433 inch) for DST 2 5/250 and 15/500
14.5mm (.570 inch) for DST 2 5/350 and 15/750.

(f) Open and close the breaker several times to check the operational performance.

(g) Refit the arc-chutes and the safety barrier as instructed in 5.4.2.

6.1.4 Main Contact Inspection

Draw the breaker out, remove the interphase barrier, and tilt the arc-chute back. Inspect the main contacts making sure they are in perfect condition and see that the face of the contact is coated with contact lubricant. Since these contacts do not break any current they should not be pitted or burnt.

(See Appendix 1 for the number of operations the main contact can withstand before replacement is necessary).

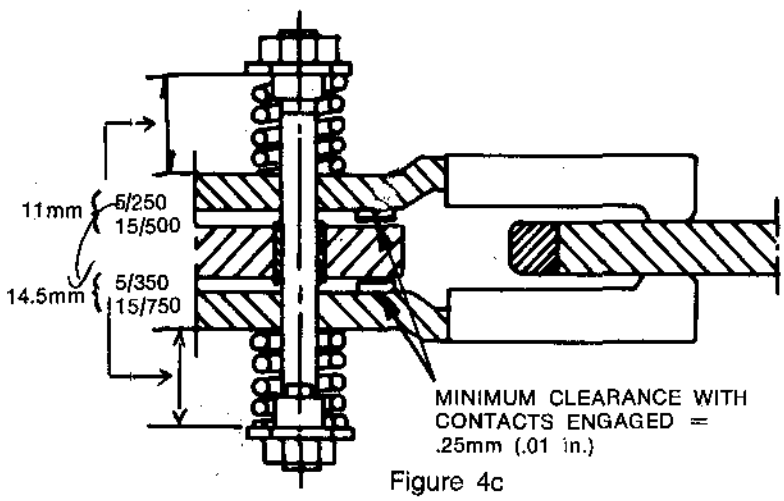

Figure 4c

6.1.5 Main Fixed Contact Replacing

Draw the breaker out, remove the interphase barrier and arc-chutes (Fig. 2). Replace the main contacts as follows:

(a) Open the breaker and discharge the closing springs.

(b) Remove the spring by unscrewing the locknut and removing the adjusting screw. Remove main contact. Install new contacts in reverse procedure. NOTE: New self locking nut should be used.

(c) Adjust the main contact springs so that the length is 10mm ± 0.2 (.40 in.) when the contacts are closed.

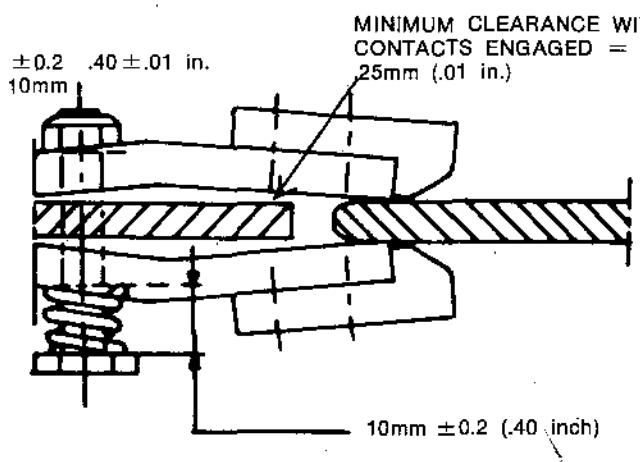

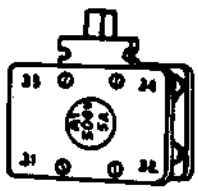

(b) LATCH SWITCH

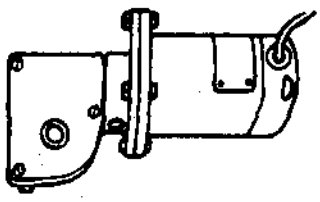

(e) SPRING CHARGING MOTOR

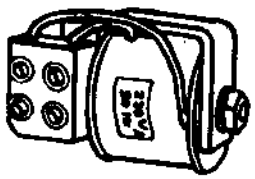

(d) SHUNT TRIP OR CLOSE ASSEMBLY

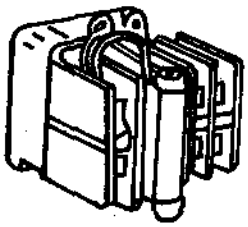

(c) RELAY ASSEMBLY

6.2 OPERATING MECHANISM MAINTENANCE

The operating mechanism is supplied thoroughly lubricated and does not need any special care during its lifetime. It is however, advisable to clean it carefully after every 2000 operations or once a year whichever comes first.

The cleaning should be done by means of a paint brush drenched with solvent with the breaker open and springs discharged.

The links, levers, pins and chain drive mechanism should be lubricated with good quality light grease.

PART II – DETAILED MAINTENANCE PROCEDURE

1 OPERATING MECHANISM

1.1 CHARACTERISTICS

The closing springs of the operating mechanism are charged by the motor. The spring charging time is approximately 10 seconds.

The mechanism performs the following cycles:

(a) Starting with the breaker open and springs charged:
CO → TC → CO → TC → CO
Where: CO means "Close-Open" positions TC means spring charging time

(b) Starting with the breaker closed and springs charged:
O → t → CO → TC → CO
Where: O means "Open", t means reset time.

1.2 PRINCIPLES OF OPERATION

The operating positions of the mechanism are described and shown in the following pages.

1.2.1 Breaker Open — Closing Springs (1) Discharged (Fig. 6a) (Page 9)

The breaker is in this position after each "Close-Open" cycle before recharging. This is a transient position.

1.2.2 Breaker Open — Closing Springs (1) Charged (Fig. 6) (Page 10)

This is the usual operating position of the open breaker. The springs can be charged as follows: (Fig. 6)a)

(a) Manual Charging.

Turn the shaft (3) half a turn clockwise using the crank (2). This corresponds to complete charging of the springs. When the shaft (3) is rotated, it drives the shaft (5) by means of the chain (4). The shaft, being connected to lever (6) through connecting rod (7) and crank (8) causes, in its turn, the charging of the springs. At the end of this motion the pin (9), moving together with lever (6), actuates pin (10) thus causing the rotation of the lever (11) and the quick relatching of the trace mechanism.

BREAKER OPEN: CLOSING SPRINGS DISCHARGED

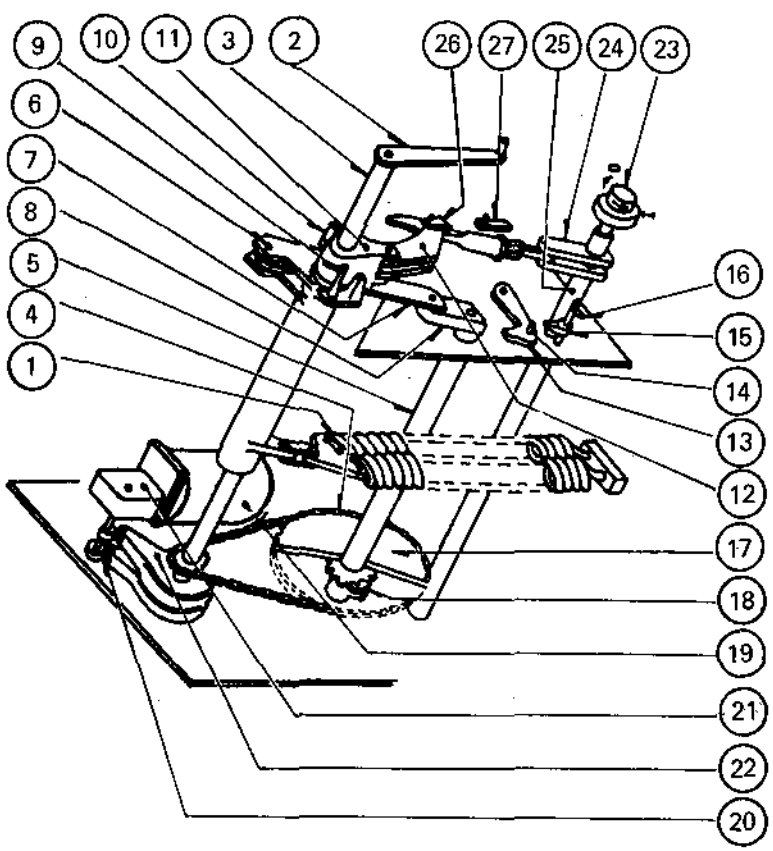

Fig. 6a

BREAKER OPEN: CLOSING SPRINGS CHARGED

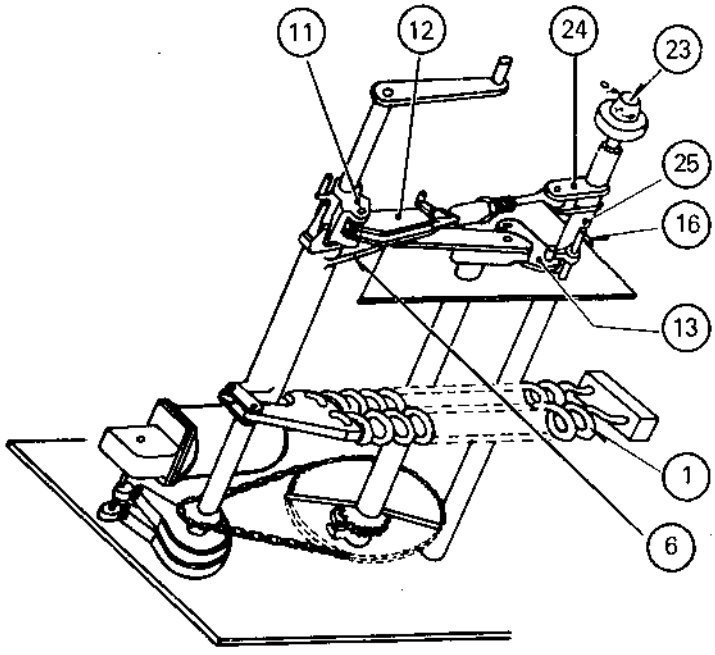

Fig. 6b

BREAKER CLOSED: CLOSING SPRINGS CHARGED

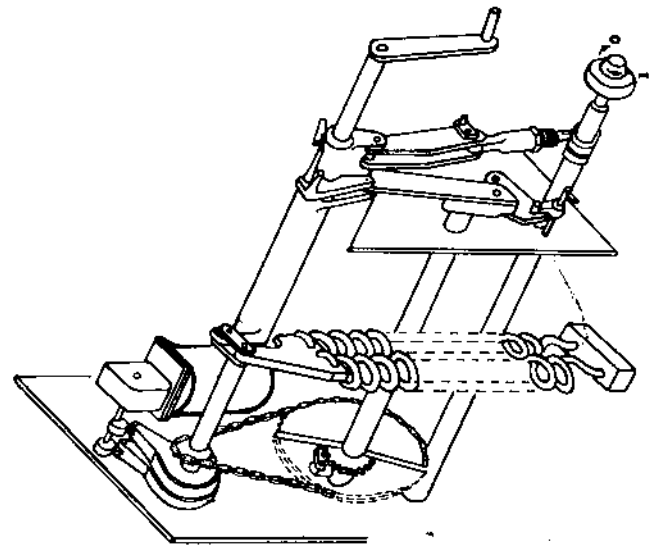

Figure 6

BREAKER CLOSED: CLOSING SPRINGS DISCHARGED

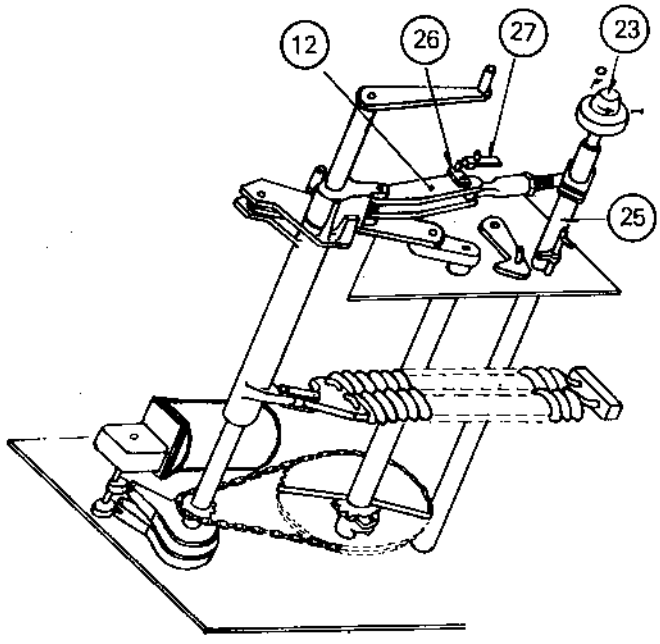

Fig. 6c

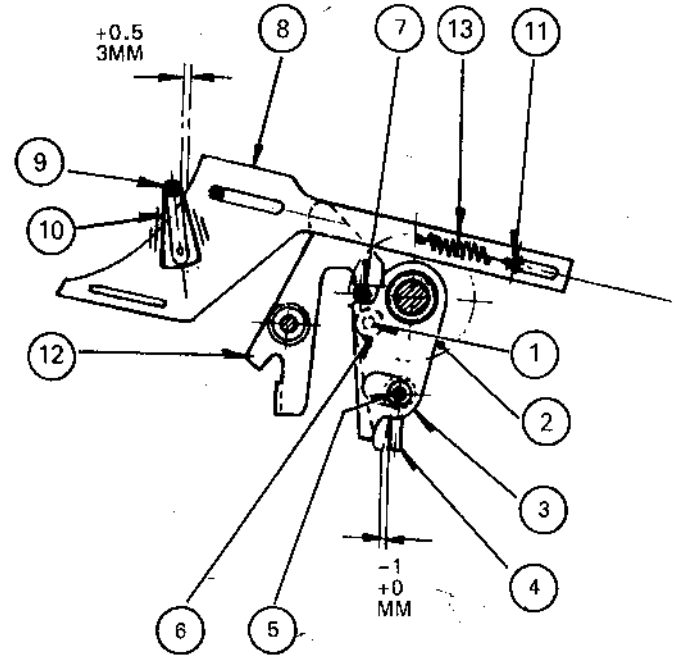

Figure 7

fully charged, the primary closing latch (13) xed by the secondary closing latch (15) on) by means of bearing (14) assuring the re kept charged, while the sprocket wheel (17) n ratchet (18) idles for a short while. If (1) are not completely charged, the breaker close.

ugh the spring charging can be done manually ibed above, the usual procedure is to perform ration by means of a motor.

Motor Charging.

n motor (19) is energized, it rotates camshaft ough the reduction gear (21); the clutches (22) ated in such a way as to charge the springs in ne way it is done manually (see (a).

luring the operation, the voltage supply fails, tor is always in a position to continue charging ne voltage is restored. Charging can of course be ued manually if necessary.

2.3 Breaker Closed with Closing Springs Discharged (Fig. 6c) (Page 10)

his is a transient state for the breaker. It occurs ever the breaker is closed and before the springs echarged.

The breaker mechanism is transferred into this position as follows:

The shaft (16) is rotated either on the electrical close operation or manually through knob (23).

The latch (13) is released and springs (1) are released by rotating the lever (6) anti-clockwise. This rotates the shaft (25) clockwise through lever (11) and lever (24) and closes the breaker.

1.2.4 Breaker Closed with Charged Springs (Fig. 6d) (Page 10)

This is the usual operating position of the closed breaker. The trip operation can be performed as follows:

(a) Manually, by rotating knob (23).

(b) Remote, through the shunt trip.

1.3 TROUBLE SHOOTING

1.3.1 When the Breaker Cannot be Closed

This may be due to the following:

(a) Looseness of the eccentric (6) (Fig. 7) (Pg. 10.) — adjust as instructed in 3.1.

(b) Warpage of the trip rod (8) (Fig. 7) (Pg. 10). — check as instructed in 1.4.2.

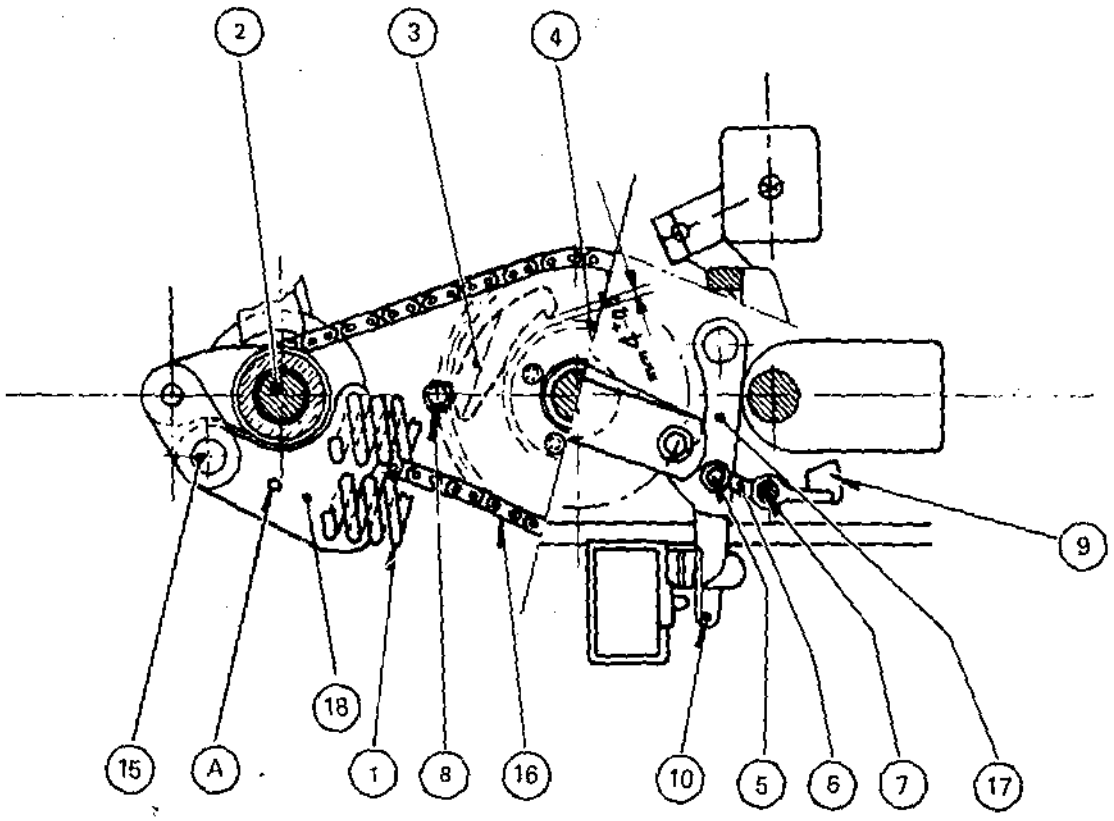

Figure 8

(c) Wear of lever (7) (Fig. 7) (Page 10).
— This trouble is very uncommon and may occur after a number of operations much greater than that recommended. The lever (7) is to be replaced by our plant or the Field Engineer.
(d) Clearance between the ratchet pawl (3) (Fig. 8) (Page 11) and the sprocket wheel (4) (Fig. 8) is different from the prescribed clearance.
— See 1.4.4 for adjustment.

1.3.2 Trouble in the Spring Charging Motor or in the Pitch Chain (16) (Fig. 8)

These happen if the clearance between the ratchet pawl (3) and the sprocket wheel is incorrect. See 1.4.4 for adjustment.

1.3.3 The Breaker Cannot be Opened

This may be due to the auxiliary circuit not being energized. Verify the circuits and their connection to the terminal board.

1.4 CHECKS AND ADJUSTMENT

1.4.1 Adjustment of the Closing Spring Mechanical Lock (Fig. 7) (Page 10)

Since this adjustment is to be made with the breaker closed, the eccentric (6) (Fig. 7) should first be locked by tightening screw (1) in such a way as to position the lobe opposite the pin (7); then, with the breaker closed and springs discharged, perform the following operations:
(a) Loosen screw (1) slightly.
(b) Turn knob (2) counterclockwise until the clearance between the lever (3) and the pin (4) of trip bar (5) is between 0 and .04 inch.
(c) Rotate the eccentric (6) until it is touching pin (7) of knob (2); lock it in this position by tightening the screw (1).

1.4.2 Checking the Trip Bar (8) for Opening the Breaker (Fig. 7) (Page 10)

When the breaker is closed, the clearance between the pin (9) of the trace trip lever (10) and the trip rod (8) actuated by the knob (2) is to be 3mm (≈ .118 inch) approximately. Should this clearance by shorter, the pin (9) would hit the trip bar (8) thus tripping the breaker.

Therefore, it is necessary to check that:
(a) The trip bar (8) is not warped and is not held upward by foreign substances.
(b) That the pins (11) are provided with washers and split rings
(c) That the lever (12) is not warped and moves freely,
(d) That the spring (13) is fastened securely.

1.4.3 Checking the Closing Release (7) for Closing the Breaker (Fig. 8) (Page 11)

With breaker open and springs discharged:
(a) Check the free movement of closing release bar (7) and make sure that when it is in the rest position the right end of lever (6) is stopped by the slot (9) in the dividing plate.
(b) Roller (5) should engage lever (6) with a minimum overlap of 1.5mm (= .059 inch).

1.4.4 Adjustment of the Clearance between the Ratchet Pawl (3) and the sprocket wheel (4) to prevent undue stresses to the Pitch Chain or to the Spring Charging Motor (Fig. 8) (Page 11)

Starting from "Spring Discharged" (1) position, rotate the shaft (2) half a turn clockwise, which corresponds to the full closing spring charging.

The ratchet pawl (3) must clear the sprocket wheel (4) at the instant when the bearing (5) presses against the upper part of lever (6) of closing release bar (7) thus assuring the "Spring Charged" position.

If the ratchet pawl (3) clears the sprocket wheel (4) before the bearing (5) presses on the lever (6), the closing springs (1) are not completely charged and the breaker cannot be closed.

If, on the other hand, the ratchet pawl (3) clears the sprocket wheel (4) after the bearing (5) has pressed on the lever (6), the pitch chain (16) would be subjected to undue stresses and the motor would be excessively overloaded.

Therefore, with the springs in "Charged" position, the clearance between the ratchet pawl (3) and the sprocket wheel (4) must be 4mm ± .5m (.157 ≈ ± .019 inch). This is achieved by adjusting the eccentric (8) fixed to the base plate to get the clearance required.

PART III – APPENDIX

APPENDIX 1

TABLE FOR THE DST-2 TYPE BREAKER MAINTENANCE WITH 20-600 OPERATIONS PER DAY

	OPERATIONS TO BE CARRIED OUT	NUMBER OF OPERATIONS (Normally to 10,000) (3) Every 2000	Every 5000
CHECKINGS	Arc chutes (1)	X	
	Main contacts	X	
	Arcing contacts (2)	X	X
	Main contact lubrication	X	
	Tightening of nuts, screws, etc.	X	
	Tightening of connections, shunt trip	X	
	Pitch chain of operating mechanism	X	X
	Auxiliary contacts on the operating mechanism	X	
	Closing release latch		X

(1) The arc chutes can withstand without being serviced:

Mechanical Operations		Interruptions with 1_n at the rated voltage cos Ø=0.8		Interruptions with the full short-circuit current at rated voltage cos Ø=0.15	
number	with inspection every	number	with inspection every	number replacement	with inspection after
10,000	2,000	5,000	2,000	as required	1 duty cycle

1_n=Rated Current

(2) The lifetime of arcing contacts depend on the nature of operations. Their conditions are to be inspected: replacement is required when their wear is remarkable. Numbers of operations that the arcing contacts can withstand without being replaced are indicated below.

Mechanical Operations	Interruptions with rated current at rated voltage cos Ø=0.8	Interruptions with the full short-circuit current at rated voltage cos Ø=0.15
10,000	5,000	1 duty cycle

APPENDIX 2

Fitting the Operating Mechanism to the Main Breaker.

The DST-2 is shipped as one unit having the operating mechanism mounted on the main breaker. If, however, it becomes necessary to remove the mechanism it should be refitted horizontally as shown in (Fig. 9a), making use of the holes in the frame as indicated in (Fig. 9b).

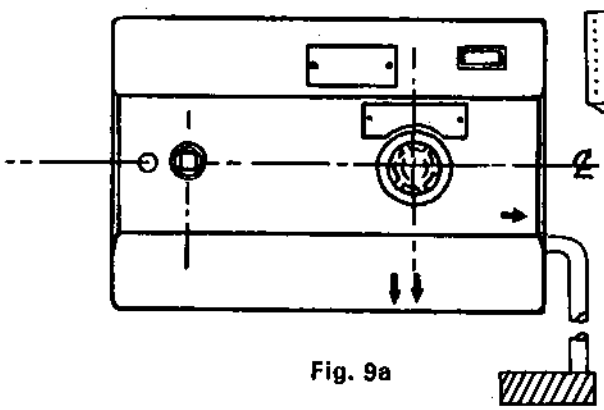

Fig. 9a

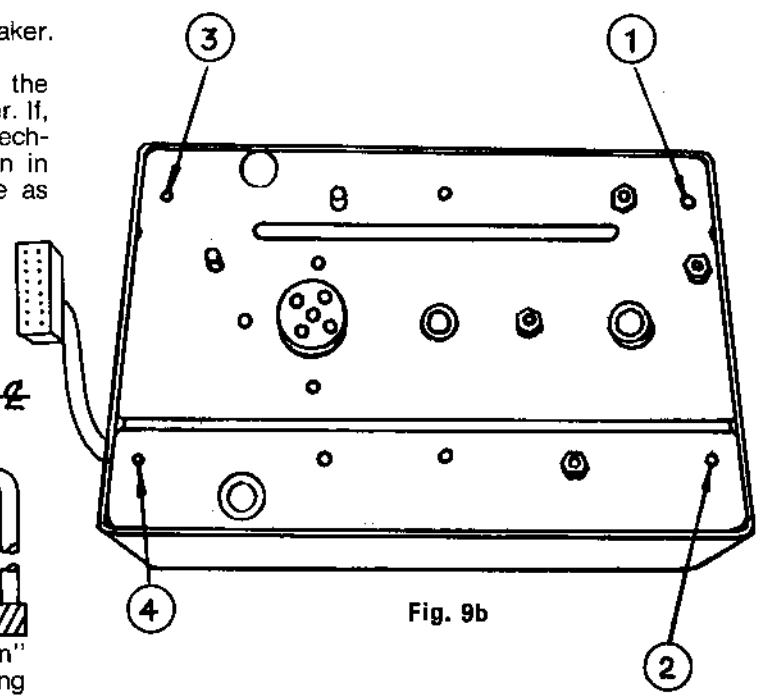

Fig. 9b

NOTE: Mechanism should be assembled in the "Open" position and closing springs "Discharged". Moving contacts should be in the "Fully Open" position.

APPENDIX 3

Fitting, Replacement and Adjustment of The Trace (Fig. 10).

(a) Open the breaker and release the springs.
(b) De-energize the auxiliary circuits.
(c) Charge the closing springs until the trace (1) system, latches in the position shown on Fig. 10.
(d) Remove the split washer (2) and slip out the pin (3).
(e) Lift the lever (4) by operating on pin (5).
(f) Remove the clips and washers from pin (6).
(g) Disengage the trace reset springs (9).
(h) Remove the trace.

Adjustment of length of trace is made by screwing, in or out, of the right part into the left of the trace.

(i) Adjust the new trace length (L) to equal the length of the one removed. Increasing length of trace (L) increases stroke of C/B contacts and decrease in length (L) decreases stroke of C/B contacts.
(j) To reassemble the trace, reverse the above steps.

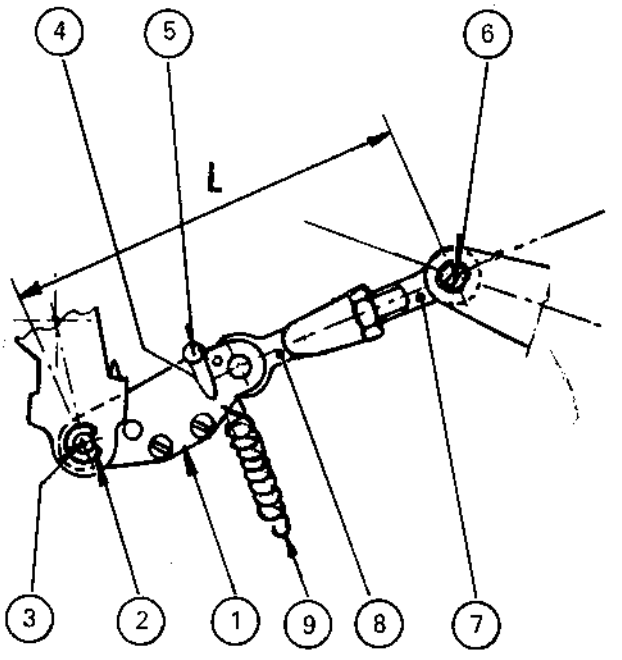

Figure 10

APPENDIX 4

Replacement of Closing Springs (Fig. 8) (Page 11).

The closing springs can be fitted with the help of a hook (Fig. 11) which will be supplied upon request, as follows:

(a) Insert a 5mm. (.197 inch) dia. pin into hold (A) of closing spring support (18).
(b) Fit the hook to the pin and insert the threaded portion of the hook into the hole drilled in the left part of the operating mechanism housing.
(c) By means of the nut supplied with the hook, charge the springs until pin (15) can be fitted.
(d) Remove the hook and check the spring charging operation.

ALL DIMENSIONS IN MM.

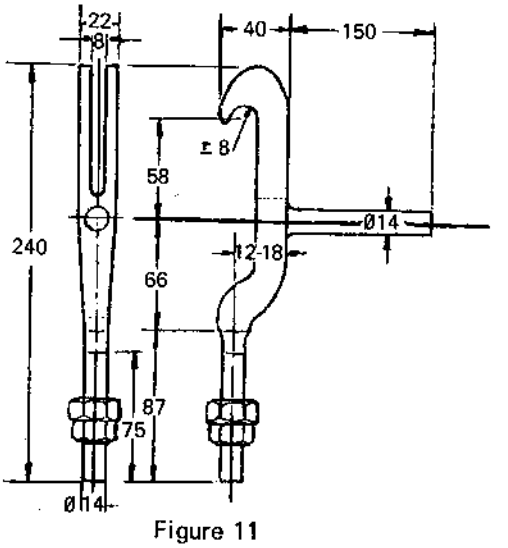

Figure 11

APPENDIX 5

DST-2 AIR CIRCUIT BREAKER CONTROL POWER REQUIREMENTS

APPENDIX 6

AVAILABLE TRIPPING VOLTAGE

Voltage, Nominal	24 VDC	48 VDC	125 VDC	250 VDC	115 VAC	230 VAC
Voltage Range	14 – 30	28 – 60	70 – 140	140 – 280	95 – 125	170 – 250
Current Required (Intermittent) At Nominal Voltage	12.5	6.25	2.4	1.2	4.4	2.2

AVAILABLE SPRING CLOSING MOTOR VOLTAGES

Voltage, Nominal	48 VDC	125 VDC	250 VDC	115 VAC	230 VAC
Voltage Range	35 – 0	90 – 130	180 – 260	95 – 125	190 – 250
Current Required	14	5.3	2.0	4.5	2.3

AVAILABLE CLOSING RELEASE COIL VOLTAGES

Voltage, Nominal	48 VDC	125 VDC	250 VDC	115 VAC	230 VAC
Voltage Range	35 – 0	90 – 130	180 – 260	95 – 125	190 – 250
Current Required At Nominal Voltage	6.25	2.4	1.2	4.4	2.2

STANDARD AND OPTIONAL ACCESSORY LIST

SPRING CHARGING CRANK

1. Attach crank to square shaft at front left of mechanism.
2. Rotate until ratcheting ceases. The closing springs are now charged.

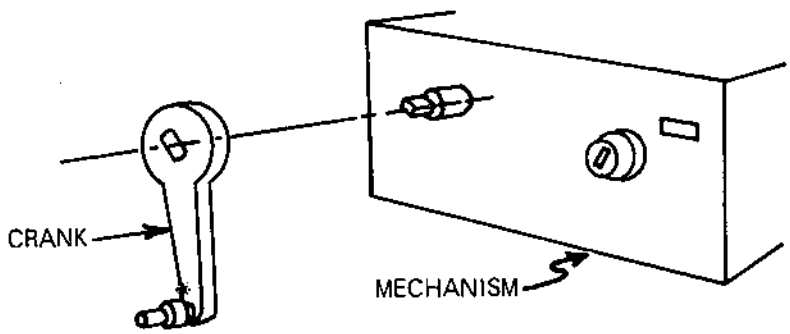

RACKING HANDLE

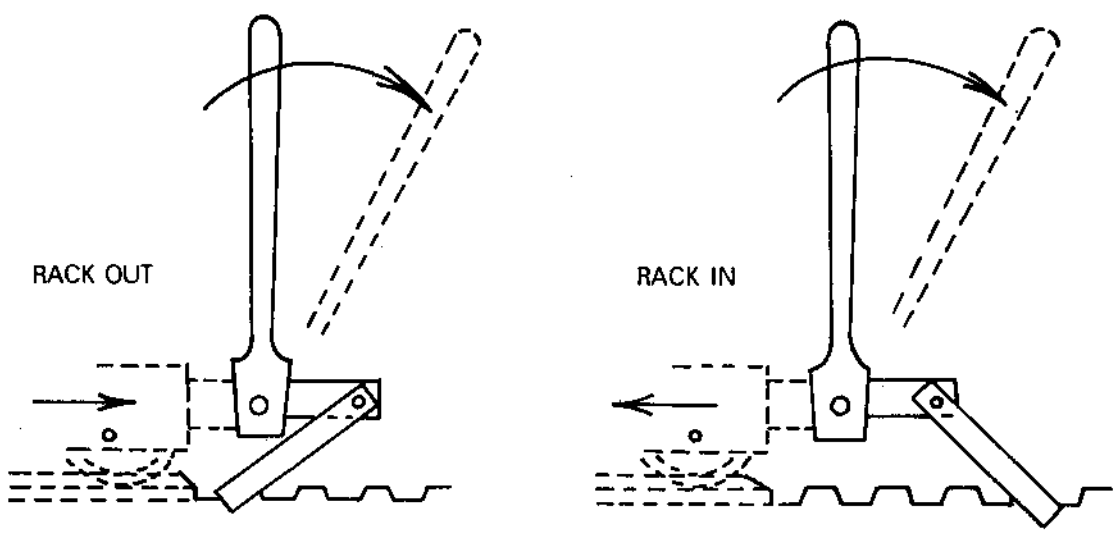

1. With circuit breaker on rails of cell, attach racking handle in accordance with above diagram.
2. If circuit breaker is in either test or operating position, depress pedal and rack. Racking from other positions does not require depressing of the pedal.

HANDLING DOLLY

1. Fix swivel bracket to racking block of C.B.
2. Insert swivel pin on handle assy. into swivel bracket.
3. C.B. can now be moved in any direction.

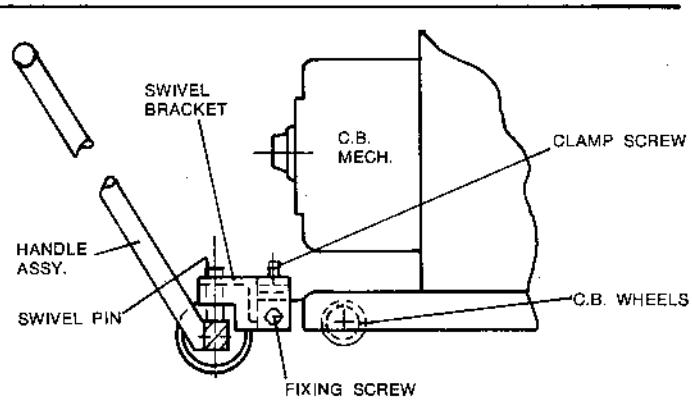

PIONEER ELECTRIC **DST 2 5 KV AND 15 KV CIRCUIT BREAKER INSTRUCTIONS**

5KV ARC-CHUTE LIFTING YOKE
15KV ARC-CHUTE LIFTING YOKE

1. Attach arc chute lifting yoke and tighten clamping screws securely.
2. Lift by means of lifting hook or sling at point "A" arc chute will swing at proper angle for removing or assembling on to circuit breaker.

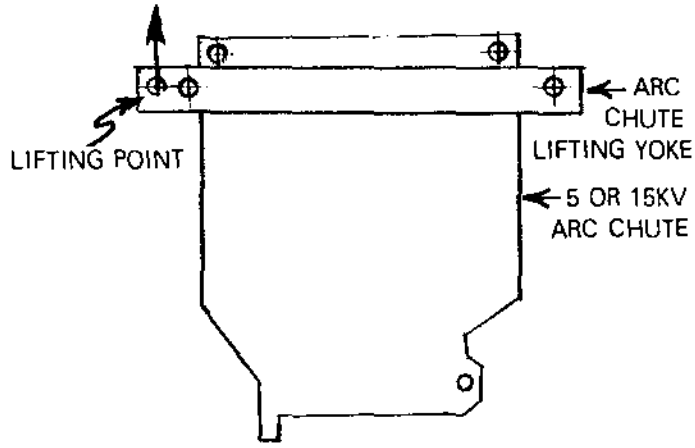

TEST JUMPER DWG. NO. W5281-D-1267
(For Front Mtd. Sec'y. Disconnects)

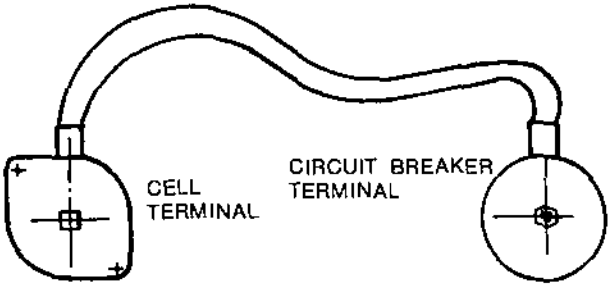

1. With C/B near cell insert one end of the jumper to the C/B sec'y. disconnect terminal.
2. Insert the other end to cell sec'y. disconnect terminal. C/B could now be tested from remote control.

TEST JUMPER, DWG. NO. W5281-B0941 For side mtd. Sec'y. disconnects

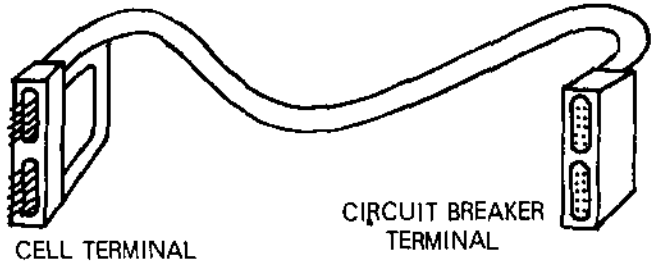

1. With circuit breaker near the cell, insert one end of the jumper to the circuit breaker secondary disconnect terminal.
2. Insert the other end to the cell secondary disconnect terminal. The circuit breaker could now be tested electrically from remote control.

TEST CABINET ASS'Y DWG NO W 5281-B-0935

1. With the circuit breaker near the test cabinet, insert one end of the test jumper to the circuit breaker.
2. Insert the other end to the cell secondary disconnect terminal, the circuit breaker could now be tested electrically from the test cabinet.

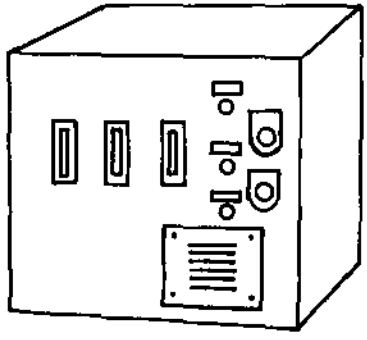

TABLE OF SPARE PARTS FOR BREAKER SERIES DST-2

No.	Sketch	Description	Quantity for 1 Breaker	Part No.	Type of Breaker
1	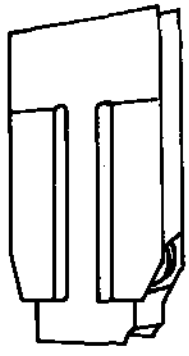	Arc Chute	3	W5281-D-0906	5KV
				W5281-D-1000	15KV
2	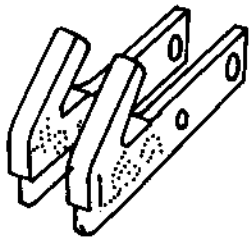	Fixed Arcing Contact	3 Couples	126928GR1 126928GR2	5KV 15KV
3	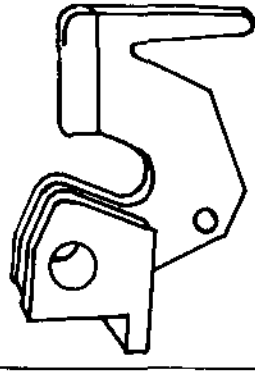	Moving Arcing Contact	3	125631	5KV
4	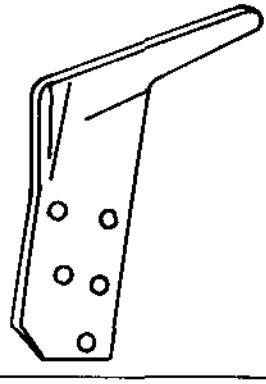	Moving Arcing Contact	3	123836	15KV
5		Main Fixed Contact	24	126770	15KV 1200A
			48	126770	5KV 1200A
			48	126770	15KV 2000A
			48	126770	5KV 2000A

TABLE OF SPARE PARTS FOR BREAKER SERIES DST-2

No.	Sketch	Description	Quantity for 1 Breaker	Part No.	Type of Breaker
6	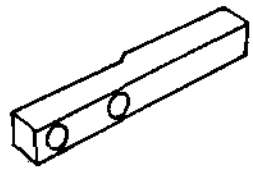	Leading Finger for Moving Contact	6	121047 124701	5KV 1200A 2000A
7		Fixed Arcing Contact Spring	6	121042	15KV
				123663	5KV
8	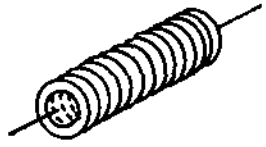	Rotating Moving Arcing Contact Spring	3	123631	5KV
9		Spring for Main Fixed Contact	12 24 24 24	123659	15KV 1200A 15KV 2000 5KV 1200 5KV 2000
10	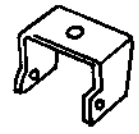	Flexible Connection for Fixed Arcing Contact	3	124162	5 & 15KV
	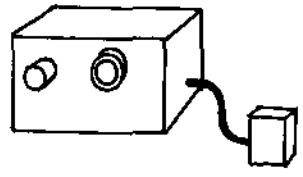	Type AEMS Mechanism	1		5KV
					15KV

TABLE OF SPARE PARTS FOR BREAKER SERIES DST-2

No.	Sketch	Description	Quantity for 1 Breaker	Part No.	Applied Voltage
11	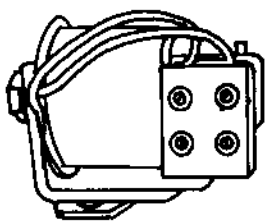	Shunt Close Assembly	1	119003/2 Specify Voltage	48VDC 125VDC 250VDC 115VAC 230VAC
12	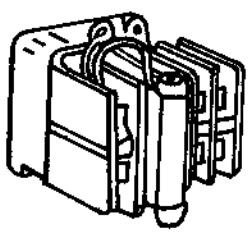	Y Relay Assembly	1	119835/1 Specify Voltage	48VDC 125VDC 250VDC 115VAC 230VAC
13	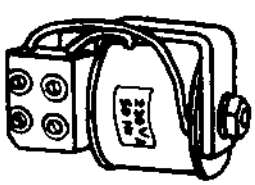	Shunt Trip Assembly	1	119003/3 Specify Voltage	24VDC 48VDC 125VDC 250VDC 115VAC 230VAC
14	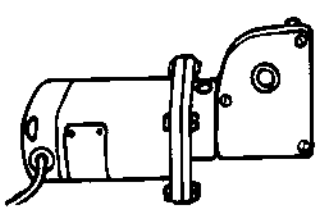	SPRING CHARGING MOTOR WITH GEAR BOX	1	119975B/4 Specify Voltage	48VDC 125VDC 250VDC 115VDC 230VDC

TABLE OF SPARE PARTS FOR BREAKER SERIES DST-2

16	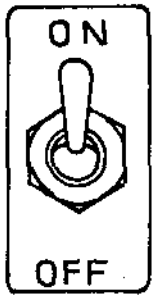	*Lockout Switch* Basic breaker is equipped with 2 pole lockout switch used for internal control. It is not necessary to specify this switch on breaker order.		1551-5558	5 & 15KV
		Lockout switch with one extra spare contact.		1552-5558	5 & 15KV
17	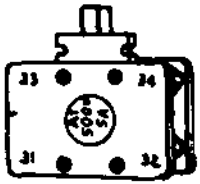	Latch Switch			5 & 15KV

DST 2 — 15/500
CONTACT SETTINGS

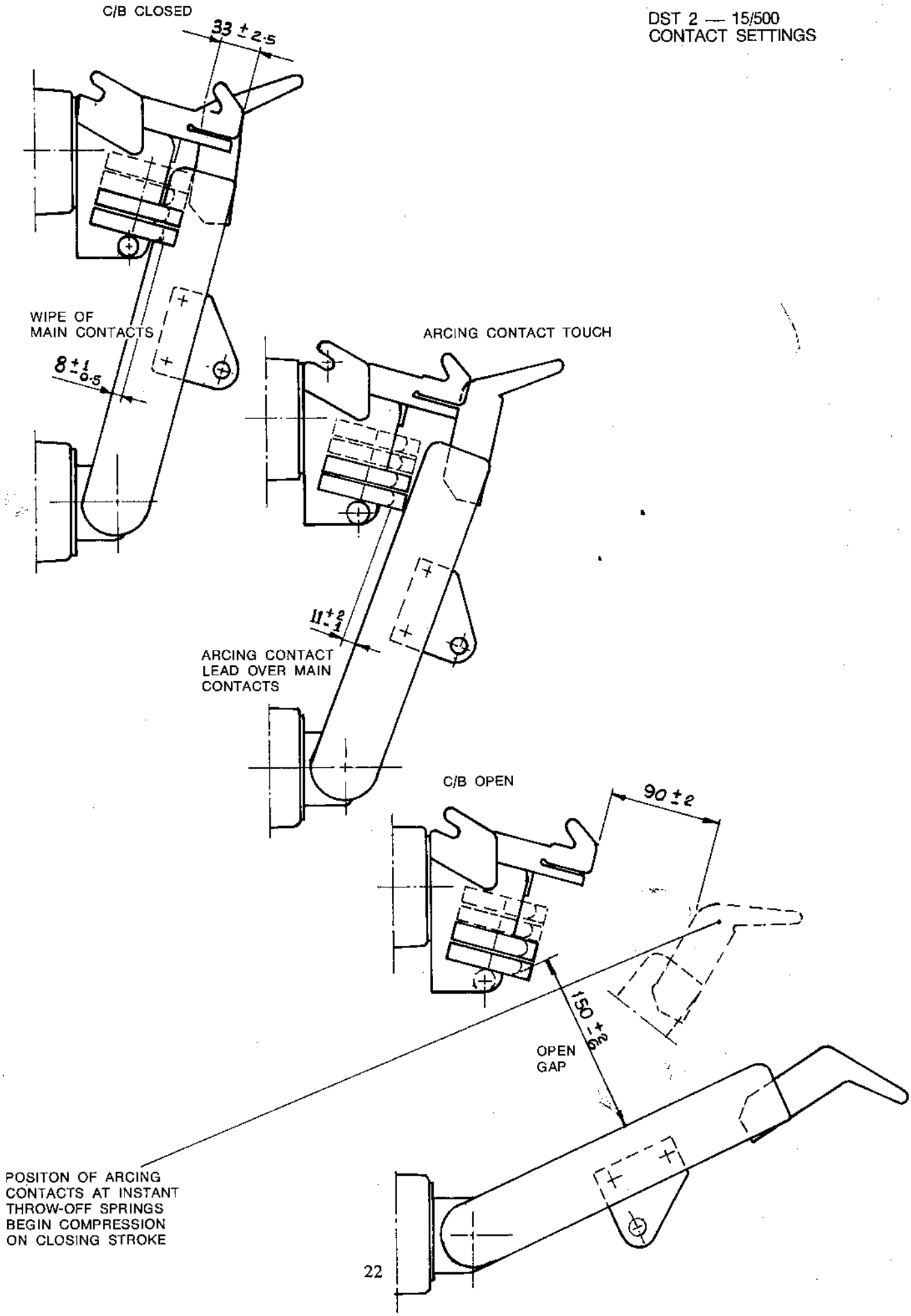

C/B CLOSED

DST 2 — 15/750 and 5/350 and 5/250
CONTACT SETTINGS

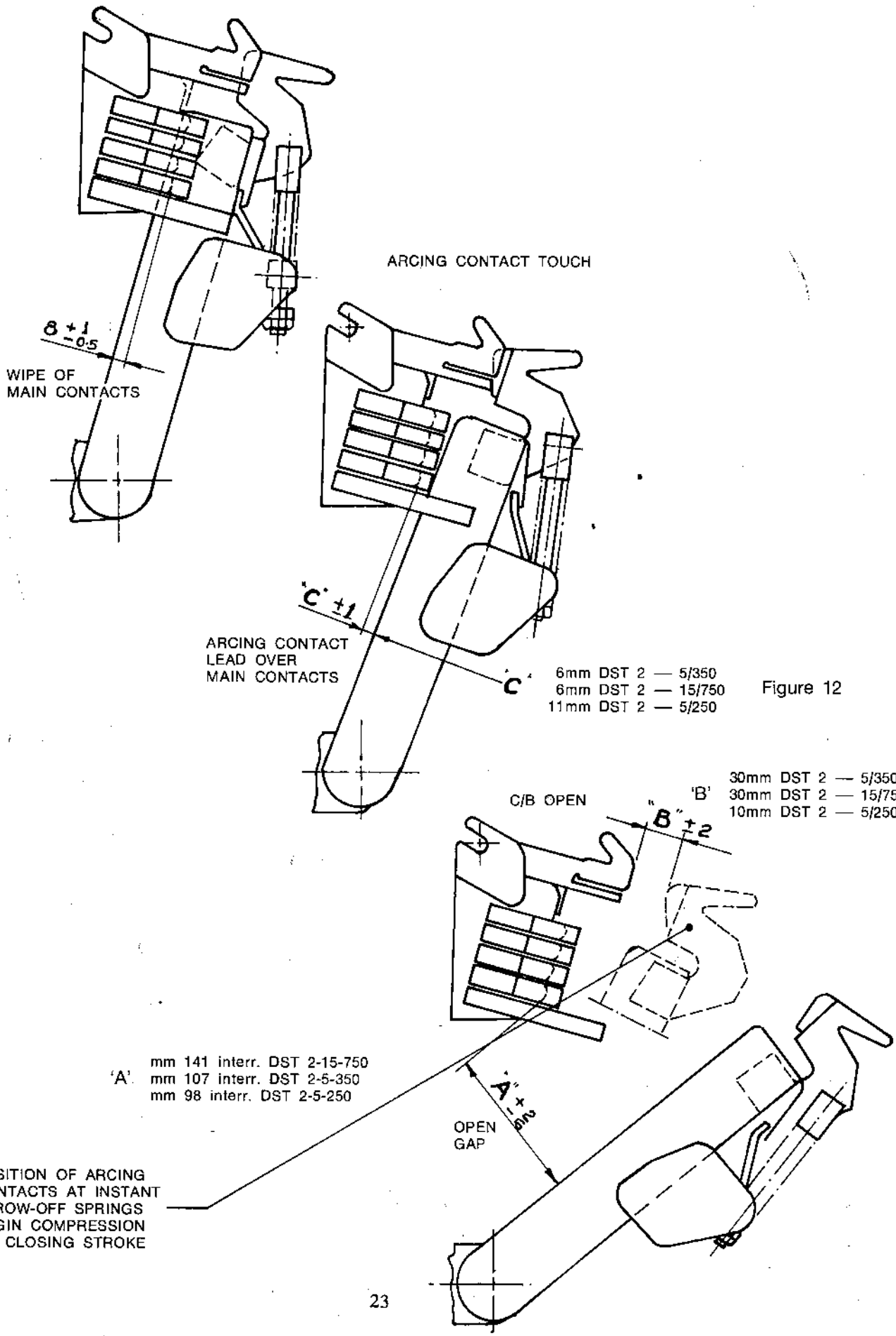

Figure 12

– 2 15/500
) WITH SIDE MOUNTED
IARY DISCONNECTS

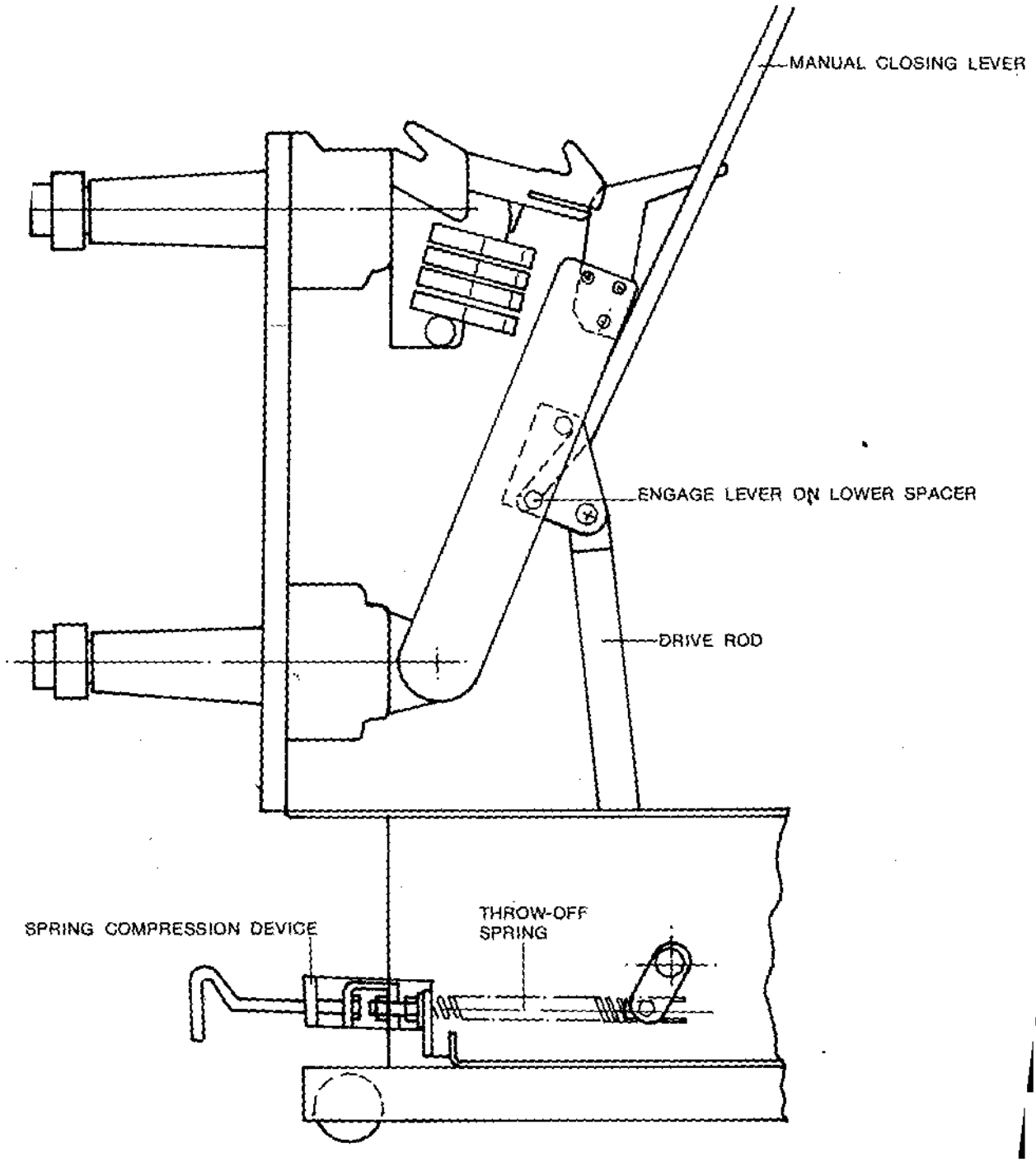

1. Attach spring compression device and fully compress throw-off spring.
2. Engage manual closing lever taking care to locate notch on lower spacer as shown, push forw
touch position and inspect contact sequence.

DST — 2 5/350 and 15/500
FITTED WITH FRONT MOUNTED
AUXILIARY DISCONNECTS

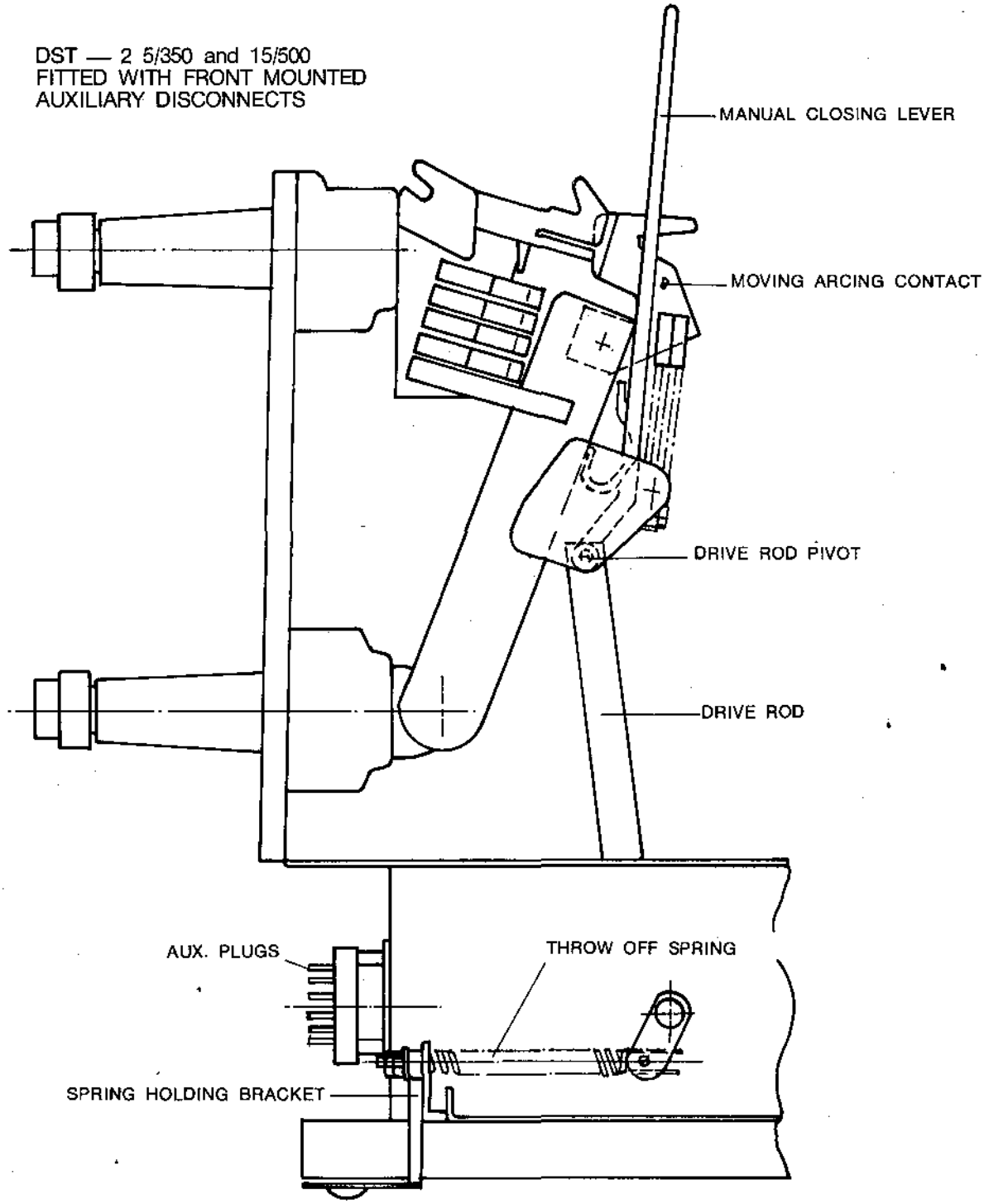

Figure 11

MAINTENANCE CLOSE DWG. NO. W5285-P-0284/B

1. Charge springs and close C.B.
2. Fit holding bracket on end of throw off spring guide and trip C.B.
3. Insert manual closing lever at side of moving arcing contact with notch seated on drive rod pivot spacer, push forward to contact touch position and inspect contact sequence.

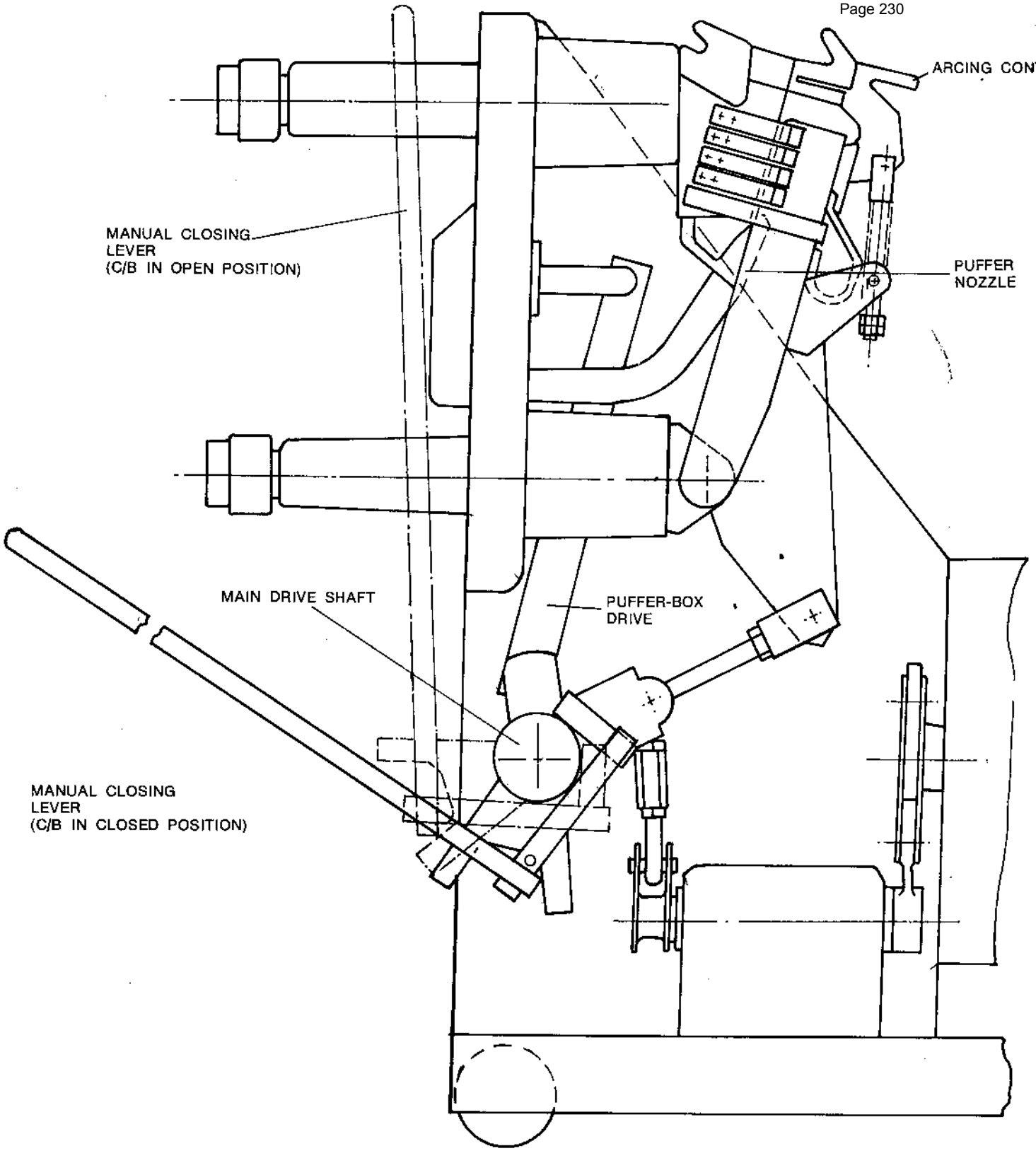

DST 2 — 5/250 CIRCUIT BREAKER
MAINTENANCE CLOSE HANDLE W5285-P-0267
1. Attach handle to main shaft as shown.
2. Push downwards to contact touch position and inspect contact sequence.

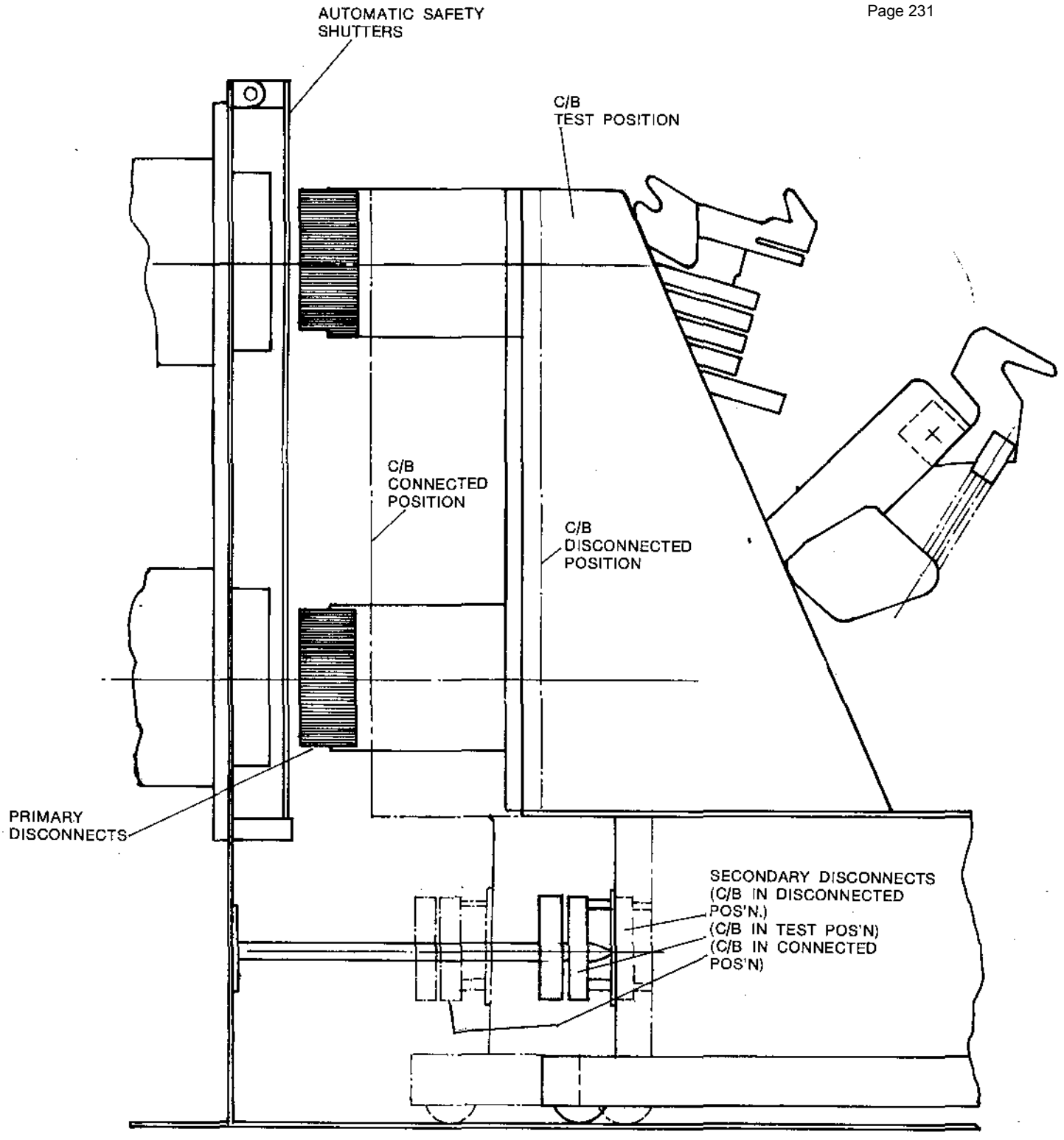

DST 2 CIRCUIT BREAKER (3000 AMP)
WITH FRONT MOUNTED AUXILIARY DISCONNECTS

Secondary disconnects are automatically connected in "test" and "connected" positions of C/B. They are automatically disconnected in "disconnected" position of C/B.

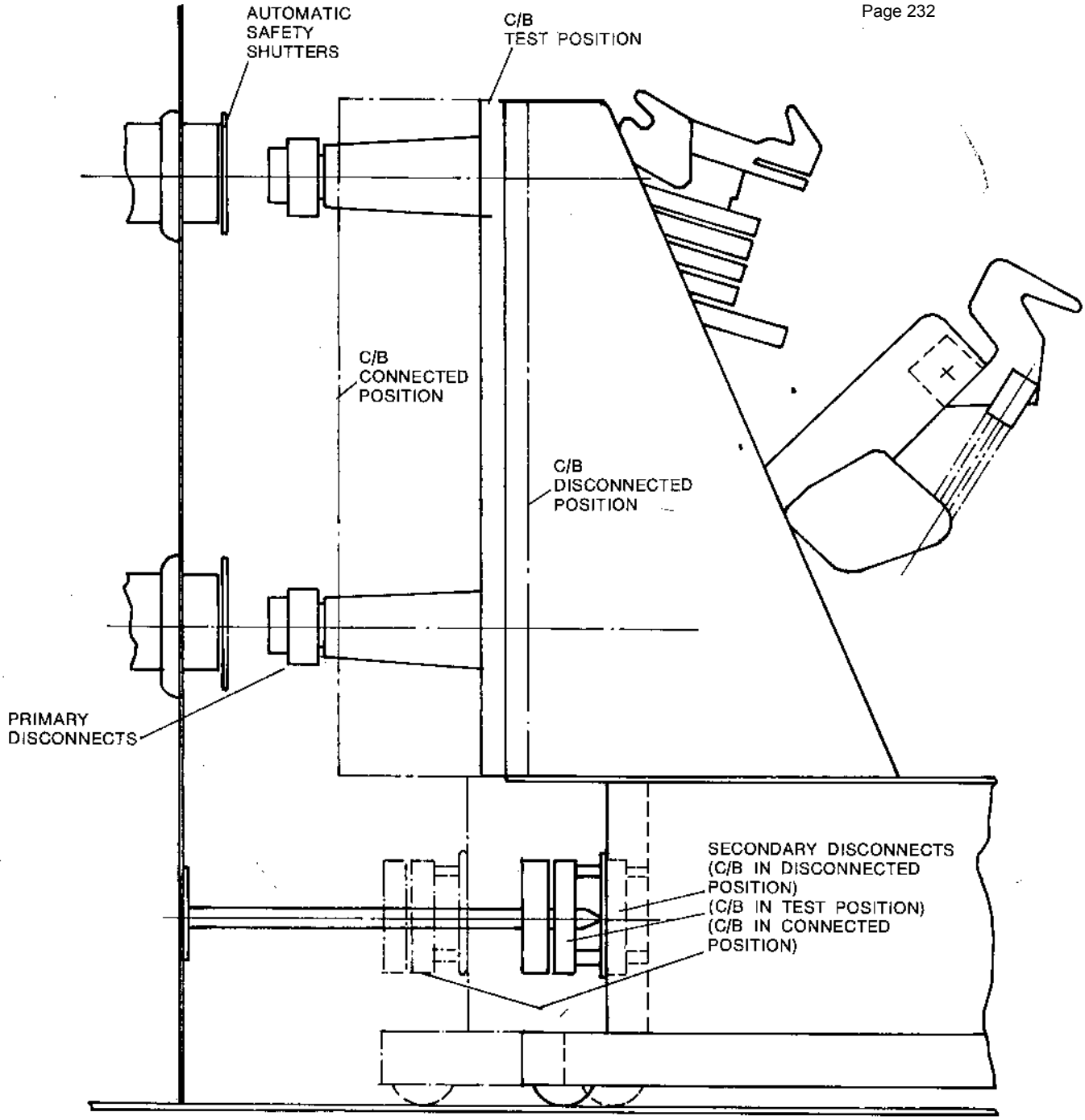

DST — 2 CIRCUIT BREAKER (1200 and 2000 AMP)
WITH FRONT MOUNTED AUXILIARY DISCONNECTS

Secondary disconnects are automatically connected in "test" and "connected" positions of C/B. They are automatically disconnected in "disconnected" position of C/B.

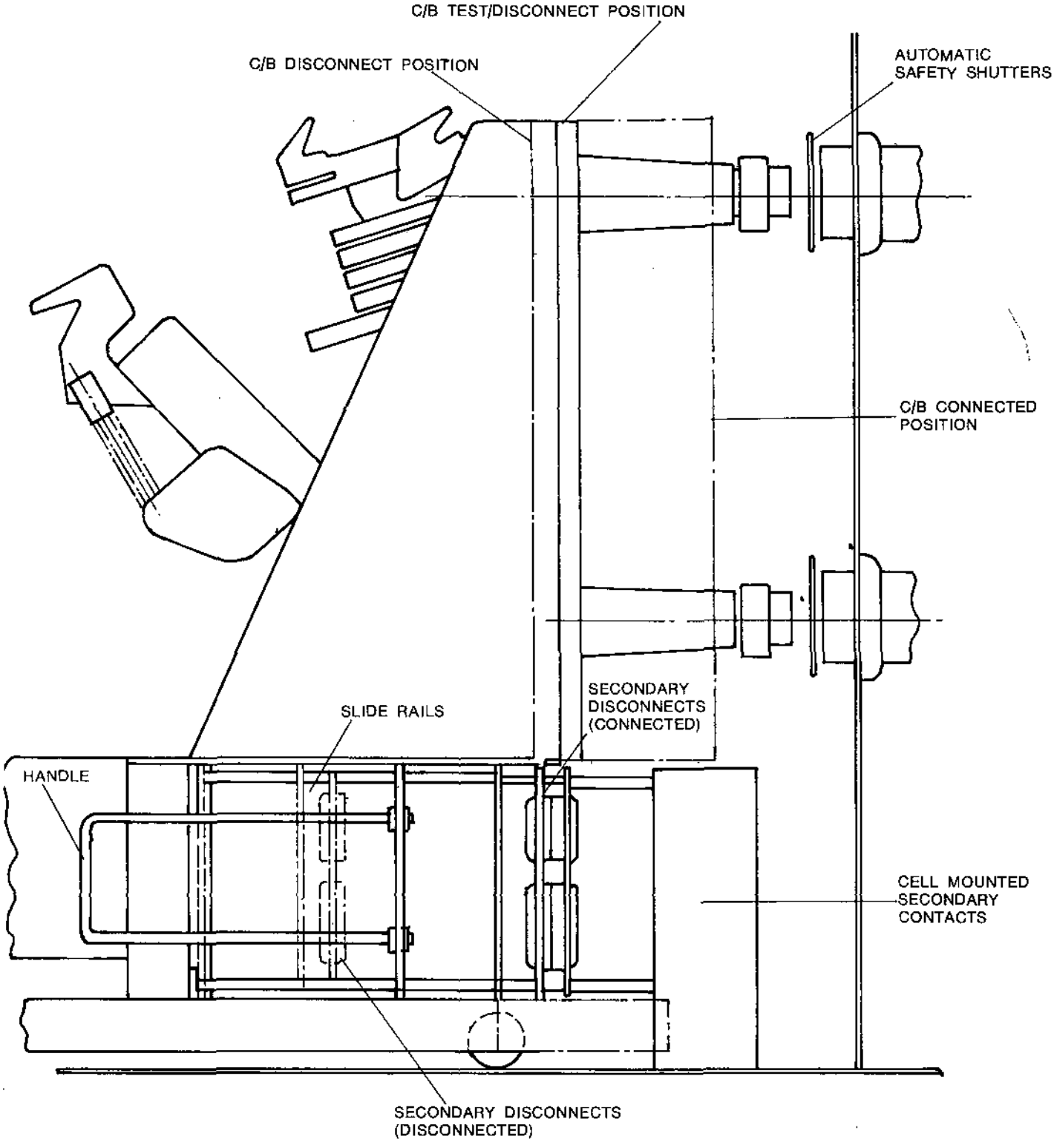

Secondary disconnects are connected in "test" and "connected" positions of circuit breaker. They may be disconnected in "test" position by pulling handle backwards to stop. Automatically disconnected in "disconnect" position of C/B.

TYPE AEMG STORED ENERGY MECHANISM

PART	DESCRIPTION	QUANTITY PER MECHANISM	DRAWING OR REFERENCE NUMBER
1	Main Drive Shaft	1	121779/1
2	Main Drive Shaft - Front Bearing	1	121777/1
3	Main Drive Shaft - Split Bearing Bush (R.H.)	1	121776/1
4	Main Drive Shaft - Split Bearing Bush (L.H.)	1	121776/2
5	C/B Open/Closed Mechanical Indicator	1	118948/2
6	Trip/Close Knob	1	118946GR.R.
7	Trip/Close Knob Washer	1	121778/1
8	Trip/Close Knob Circlip	1	8MM UNI3653
9	Trip/Close Knob Return Spring	1	118975/1
10	Spring Charging Lever & Clutch Assembly	2	118930GR.1
11	Spring Charging Lever Return Spring	2	120580/1
12	Return Spring Anchor Pin	1	125900/1
13	Anchor Pin Nut - Hexagon	1	6MM UNI5588-65
14	Lockwasher	1	6MM UNI 1751
15	Spring Charging Shaft	1	118909/1
16	Spring Charging Shaft - Front Bearing	1	Type EL 20x42x8MM
17	Spring Charging Shaft - Rear Bearing	1	118968/1
18	Washer	1	17MM UNI 1733
19	Cotter	1	4x25MM UNI 1336
20	Springs Charged/Discharged Indicator	1	119150GR.1
21	Indicator Bearing Bush	1	500116/7
22	Indicator Return Spring	1	119170/1

TYPE AEMG STORED ENERGY MECHANISM

PART	DESCRIPTION	QUANTITY PER MECHANISM	DRAWING OR REFERENCE NUMBER
23	Indicator Retaining Circlip	1	20MM UNI3653
24	Intermediate Drive Lever	1	127642/1
25	Needle Bearing	2	Type MAF 20x35x 17MM
26	Washer	1	500214/40
27	Retaining Circlip	1	35MM UNI2654
28	Crank Shaft Link Pin	1	126745/1
29	Indicator Drive Pin	1	123241/1
30	Self Locking Nut	1	B/10/208/MA
31	Spring Drive Link Pin	1	127640/1
32	Washer	1	500214/63
33	Cotter	1	3x18MM UNI1336
34	Support Bearing	1	123242/1
35	Support Bearing Screw	2	8x20MM UNI191
36	Hex Nut for Item 35	2	8MM UNI5589-65
37	Locking Plate	2	123243/1
38	Locking Plate	1	124322/1
39	Crank Shaft Assembly	1	124316GR.1
40	Crank Shaft Front Bearing	1	Durkopp type 310-3410
41	Crank Shaft Front Bearing Housing	1	Torring Ton. type TRA 1625
42	Crank Shaft Rear Bearing	1	123238/1
43	Shim Washer	1	126757/1
44	Retaining Circlip	2	25MM UNI3653
45	Eccentric Pin	1	119071/1

TYPE AEMG STORED ENERGY MECHANISM

PART	DESCRIPTION	QUANTITY PER MECHANISM	DRAWING OR REFERENCE NUMBER
46	Hex Nut	1	8MM UNI5589-65
47	Lockwasher	1	8MM UNI1751
48	Ratchet Pawl	1	119067/1
49	Ratchet Pawl - Return Spring	1	119070/1
50	Ratchet Pawl - Pivot Pin	1	119069/1
51	Pivot Pin Locknut	1	8MM UNI5588-65
52	Lockwasher	1	8MM UNI1751
53	Chain Wheel	1	119065GR.1
54	Chain	1	118969/1
55	Sprocket	1	127639/1
56	Washer	1	121770/1
57	Drive Lever	1	124283/1
58	Drive Lever Spacer	1	121768/1
59	Drive Lever Shim Washer	1	121770/1
60	Spring Latch Prop.	1	123259/1
61	Spring Latch Prop. - Return Spring	1	124332/1
62	Spring Latch Prop. - Shim Washer	1	500214/41
63	Spring Latch Lever	1	126751/1
64	Roller Bearing	1	Type RNAF 6x13x8MM
65	Roller Bearing Circlip	1	Type 5 500331
66	Latch Lever Circlip	1	15MM UNI3653
67	Tripping Toggle & Latch Assembly	1	124306GR.1
68	Tripping Toggle Reset Springs	2	130074GR.1

C-3-443
June 1972

TYPE AEMG STORED ENERGY MECHANISM

PART		QUANTITY PER MECHANISM	DRAWING OR REFERENCE NUMBER
69	Spring Anchor Pin	1	124334
70	Spring Anchor Pin Nut	1	6MM UNI5589-65
71	Lockwasher	1	6MM UNI1751
72	Link Pin	1	500589/2
73	Cotter	2	3x18MM UNI1336
74	Washer	2	500214/64
75	Pivot Pin	1	123397/1
76	Pivot Pin Circlip	1	Type 7 500331
77	Latch Check Switch Mounting Bracket	1	ST248939GR.1
78	Latch Striking Lever	1	122848/1
79	Switch Operator	1	122849GR.1
80	Circlip	1	Type 5 500331
81	Adjusting Screw	1	8x15MM UNI191
82	Hex Nut For Item 81	1	8MM UNI5588-65-A
83	Lockwasher	1	Type AZ-8
84	Switch Operator Return Spring	1	122851/1
85	Switch Element	1	122103GR.4
86	Insulation Plate	1	122850/1
87	Screws	2	3x18MM UNI191
88	Locking Plate	1	500548/8
89	Mounting Operated Trip Shaft	2	8MM UNI5588-65-A
90	Locking Plate	1	500548/15
91	Pedal Operated Trip Shaft	1	123257/1
92	Front Bearing Bush	1	500116/9

TYPE AEMG STORED ENERGY MECHANISM

PART	DESCRIPTION	QUANTITY PER MECHANISM	DRAWING OR REFERENCE NUMBER
93	Rear Bearing Bush	1	500116/10
94	Retaining Circlip	1	Type 11 500331
95	Limit Switch Frame	1	122860/1
96	Limit Switch Support	1	122855GR.1
97	Pin	1	126582/1
98	Cotter	2	1.5x8MM UNI1336
99	Adjusting Screw	1	122861/1
100	Adjusting Screw - Lockwashers	2	Type AZ-5
101	Adjusting Screw - Lock Nut	1	5MA SNEP NUT H130-R60
102	Switch Element	2	122103GR.4
103	Insulation Plates	3	122857/1
104	Switch Fixing Screws	2	3x40MM UNI240
105	Spacers	4	500113/26
106	Locknuts for Item 104	2	3MA SNEP NUT H130-R60
107	Spring	1	126744/1
108	Spring Guide	1	122858/1
109	Spring Guide Support Bracket	1	124142/1
110	Fixing Screws for Item 96	2	4x10MM UNI191
111	Lockwashers	2	4MM SHAKE PRUFE
112	Fixing Screw for Item 109	1	6x10MM UNI191
113	Locking Plate	1	500549/6
114	Close Lever	1	118944/1
115	Trip Lever	1	124304GR.1

TYPE AEMG STORED ENERGY MECHANISM

PART	DESCRIPTION	QUANTITY PER MECHANISM	DRAWING OR REFERENCE NUMBER
116	Retaining Circlip for Item 115	1	Type 7 500331
117	Trip Paddle	1	125106GR.1
118	Trip Paddle - Return Spring	1	124284/1
119	Washers	3	5.3MM UNI1733
120	Circlips	3	Type 5 500331
121	Drive Lever Stop	1	124293/1
122	Shock Absorber Pad for Item 121	1	126755/1
123	Shock Absorber Washer For Item 121	1	124295/1
124	Plain Washers For Item 121	2	8.4MM UNI1733
125	Selok Pin For Item 121	1	3x20MM Type S[illegible]
126	Spring Discharge Shock Absorber Striker Plate	1	124315/1
127	Spring Discharge Shock Absorber Pad	1	124314/1
128	Packers For Item 127	2	124329/1
129	Locating Screw for Item 126	1	124331/1
130	Hex Nut For Item 129	1	4MM UNI5588-65
131	Lockwasher	1	4MM UNI1751
132	Mechanical Plate Fixing Screws	10	122929/1
133	Hex Nut For Item 132	8	8MM UNI5588-65
134	Lockwasher	8	8MM UNI1751
135	Mechanical Cover Fixing Screws	2	8x10MM UNI240
136	Lockwasher	2	8MM UNI1751
137	Spring Discharge Lever	1	125802/1
138	Spring Discharge Lever - Return Spring	1	118542/1
139	Plain Washers	2	5.3MM UNI1733

TYPE AEMG STORED ENERGY MECHANISM

PART	DESCRIPTION	QUANTITY PER MECHANISM	DRAWING OR REFERENCE NUMBER
140	Circlips	2	Type 5 500331
141	Closing Springs Assembly	1	128076/1
142	Link	1	123246/1
143	Link Pin	1	126749/1
144	Washers	2	500214/63
145	Cotter	1	3x18MM UNI1336
146	Mechanical Front Plate	1	124300GR.1

C-3-443
JUNE 1972
FIG. 1

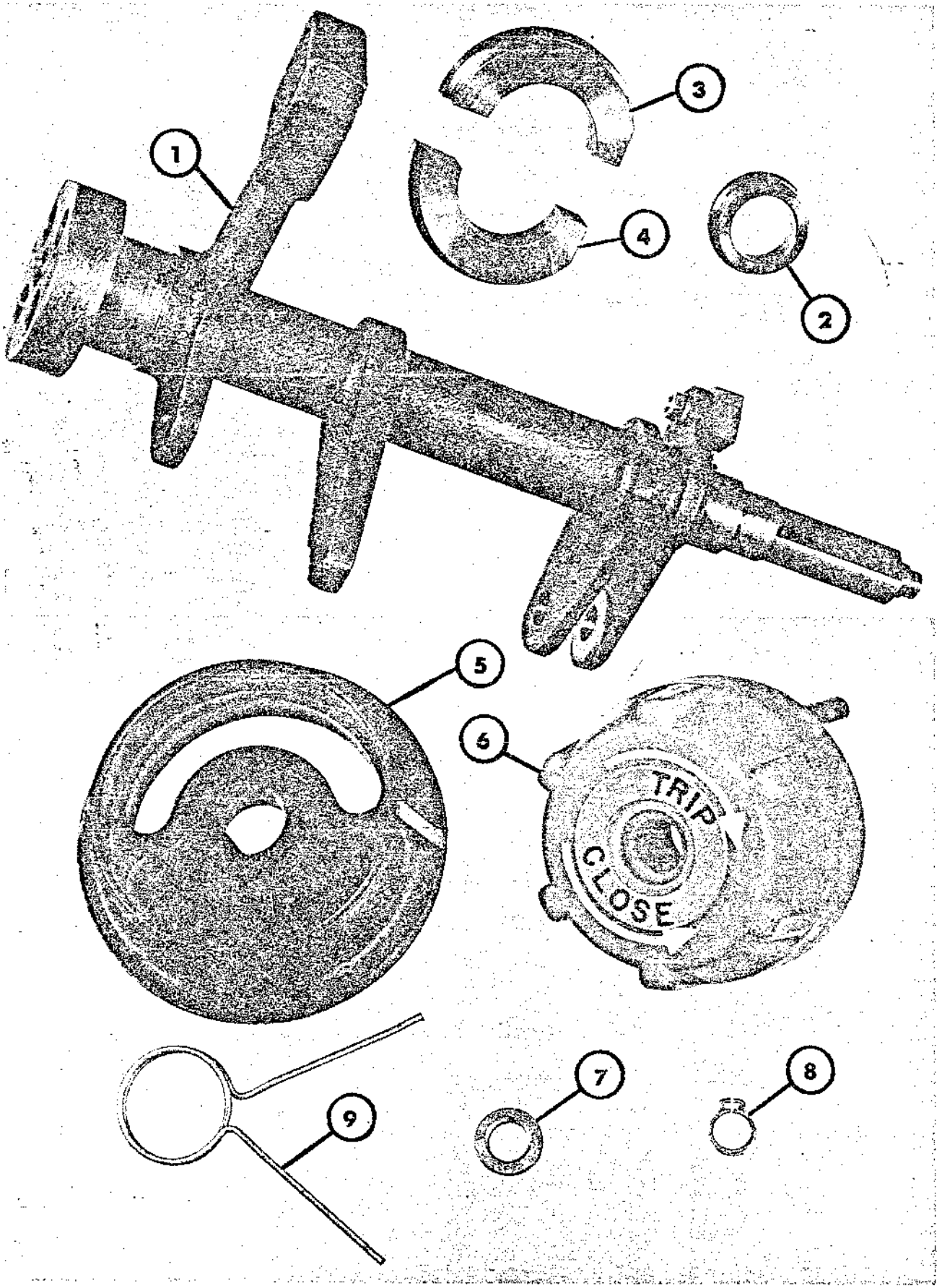

C-3-443
JUNE 1972
FIG. 2

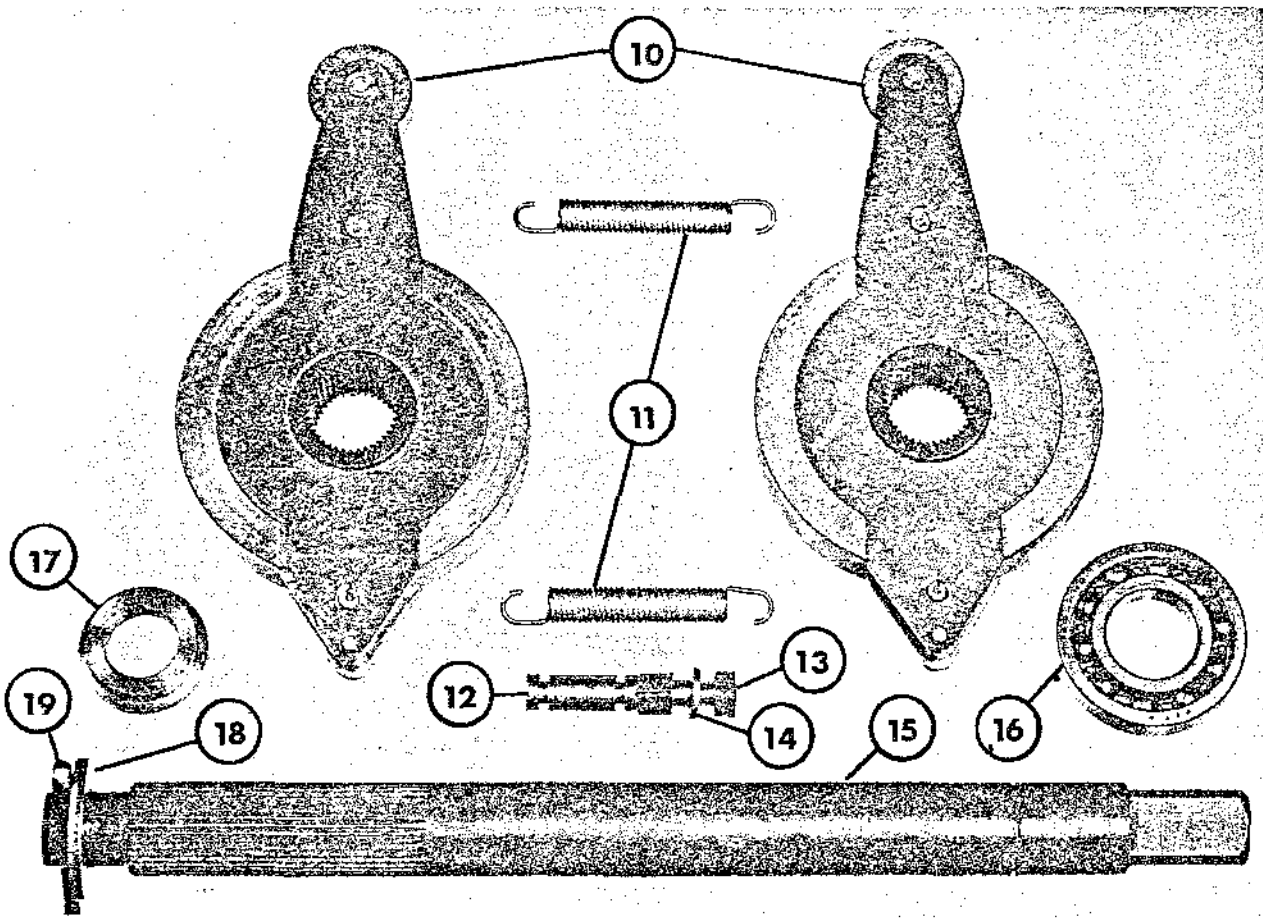

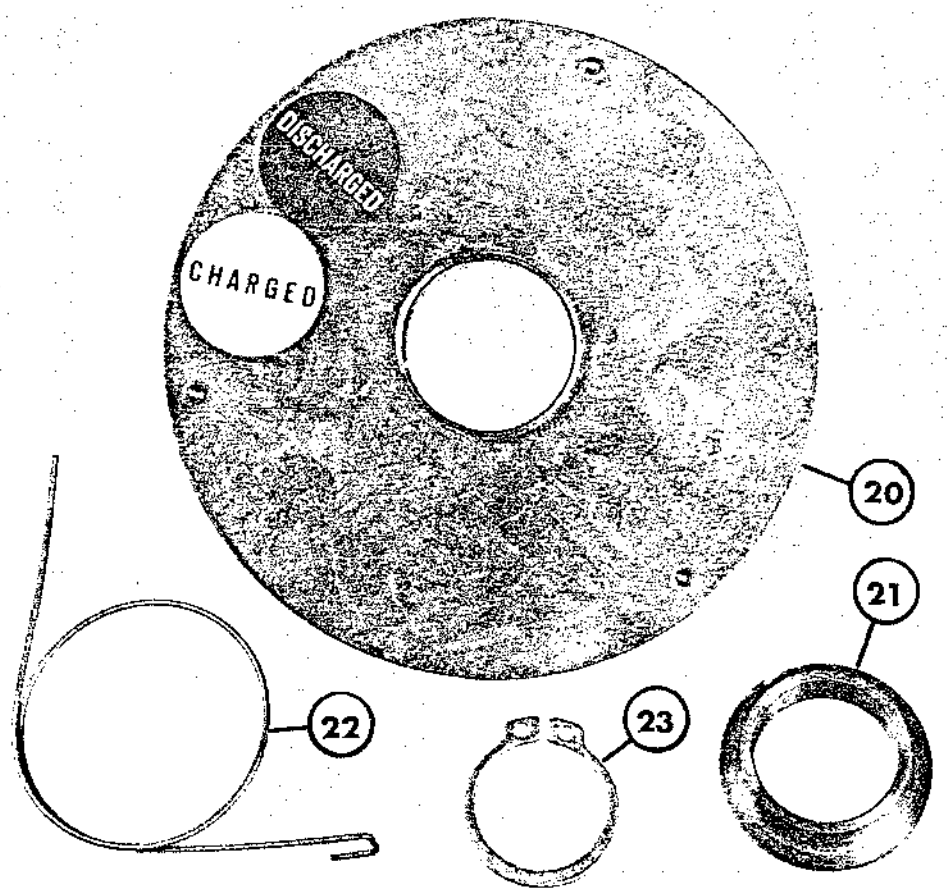

C-3-443
JUNE 1972
FIG. 3

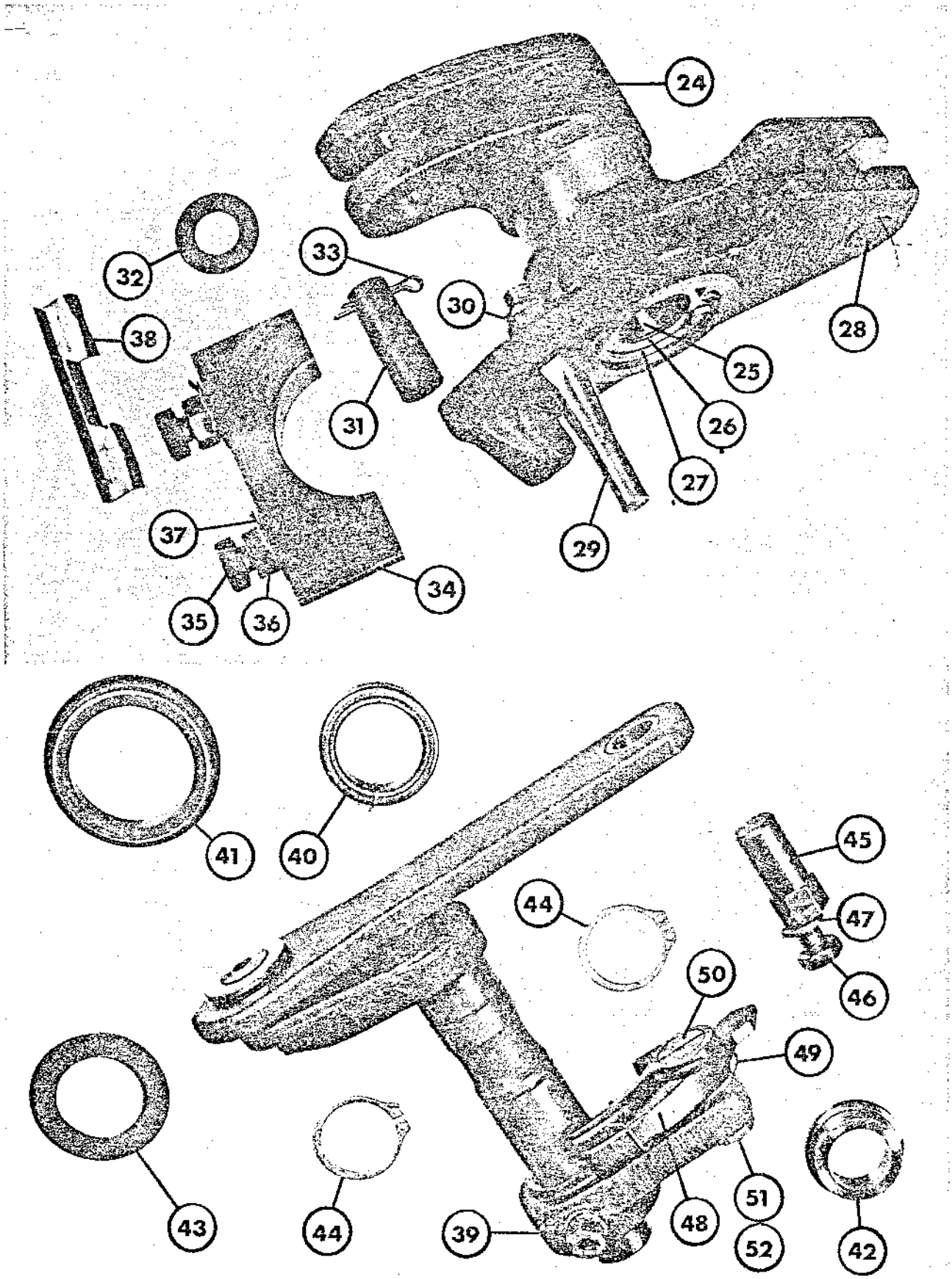

C-3-443
JUNE 1972
FIG. 4

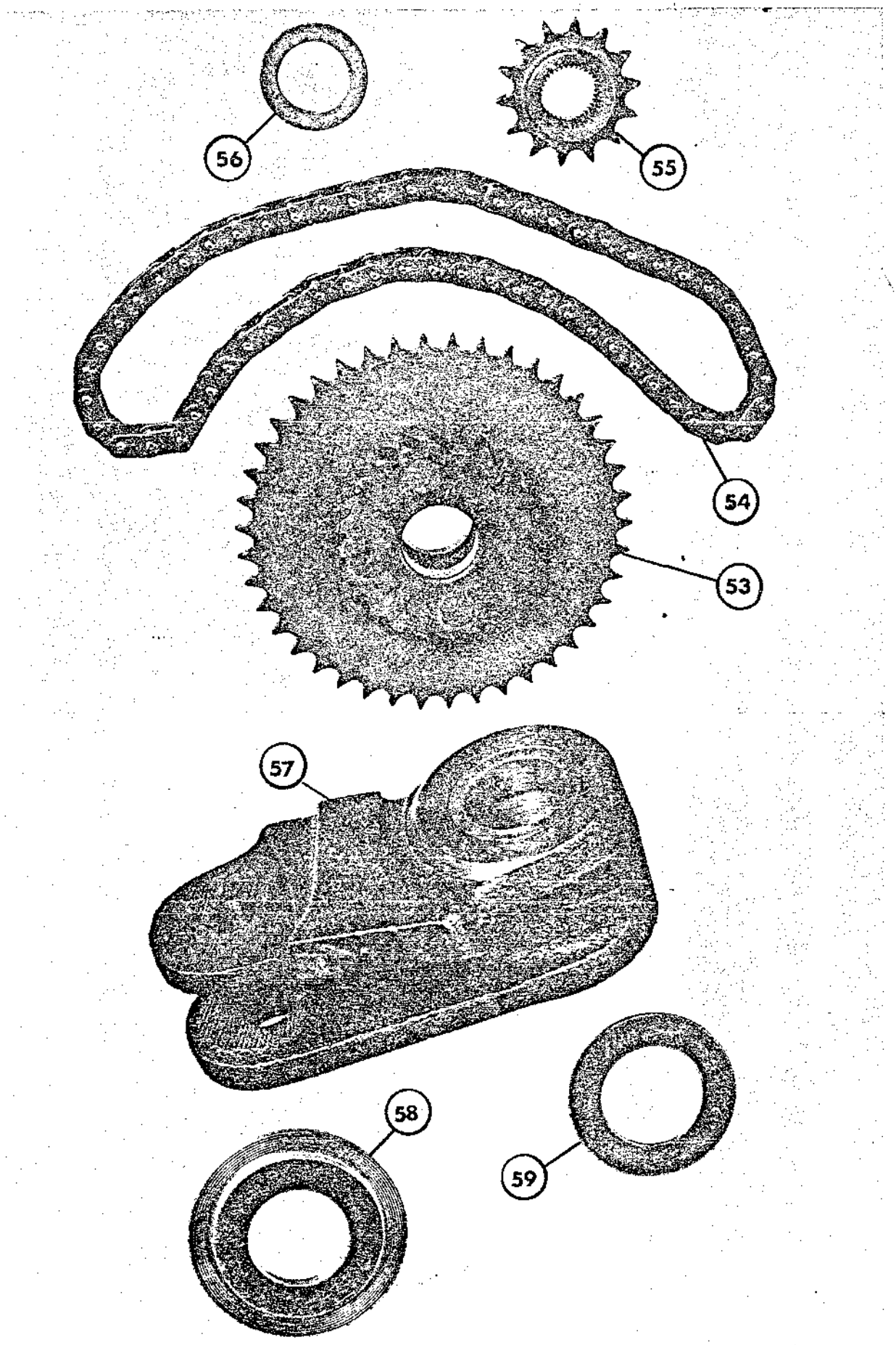

C-3-443
JUNE 1972
FIG. 5

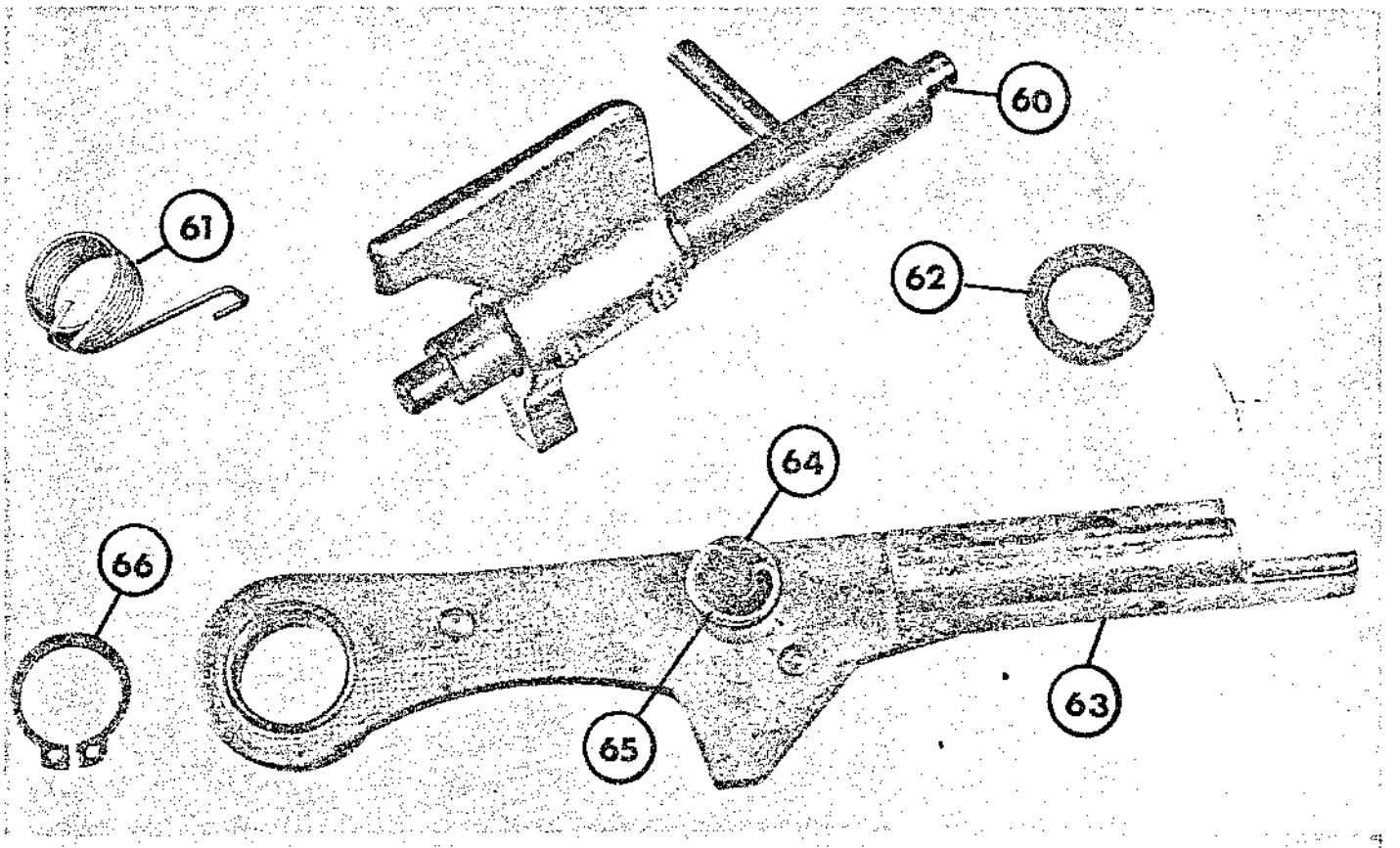

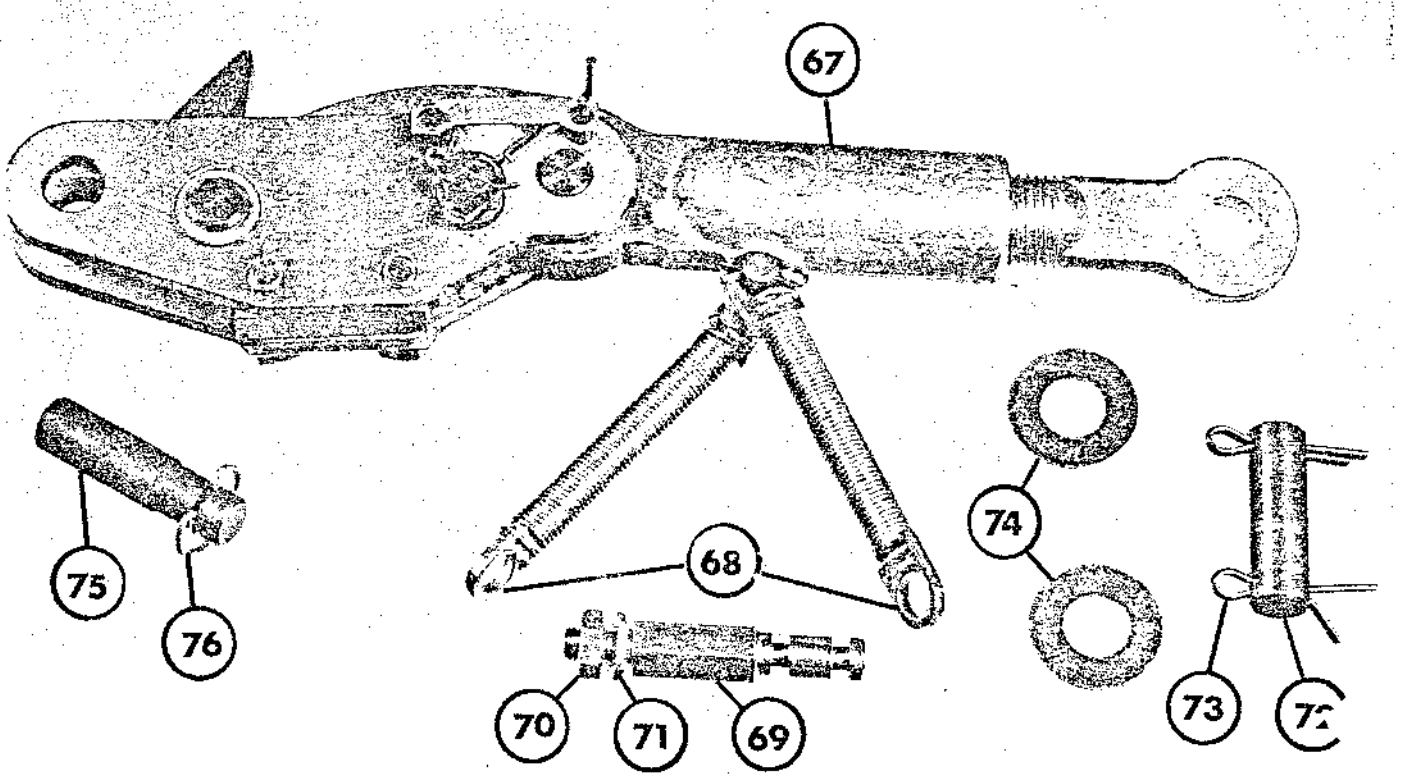

C-3-443
UNE 1972
FIG. 6

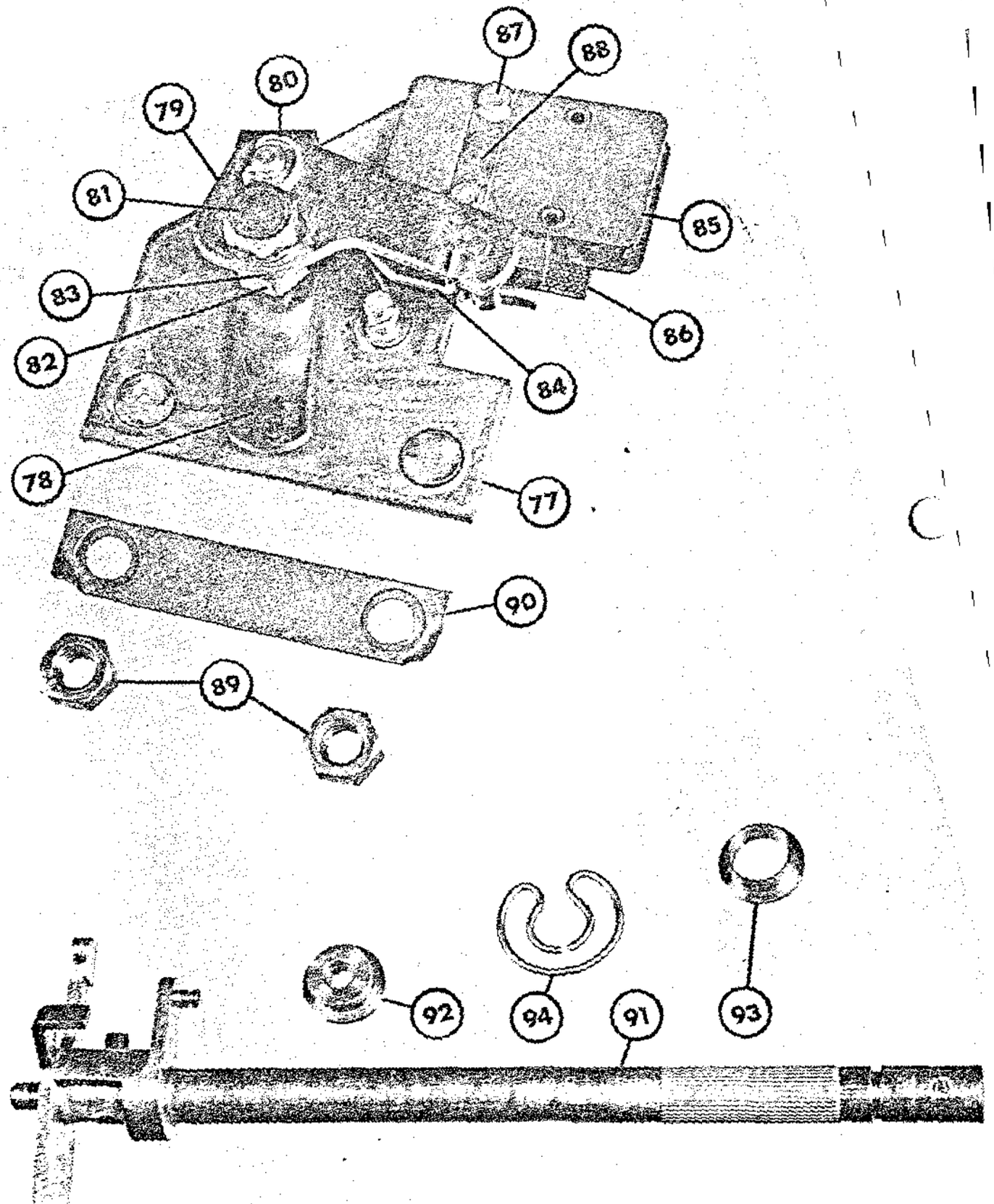

C-3-443
JUNE 197
FIG.

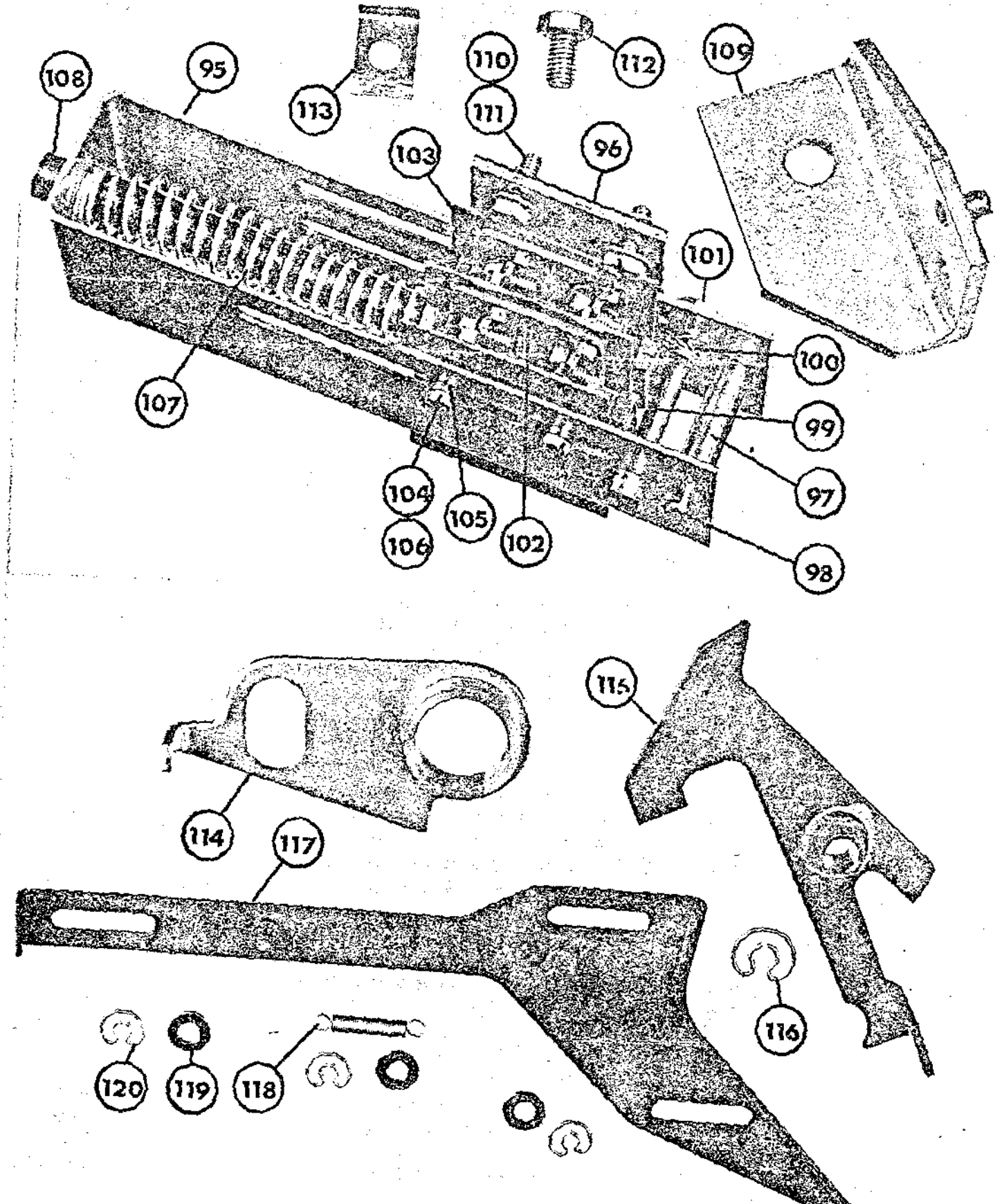

C-3-443
UNE 1972
IG. 6

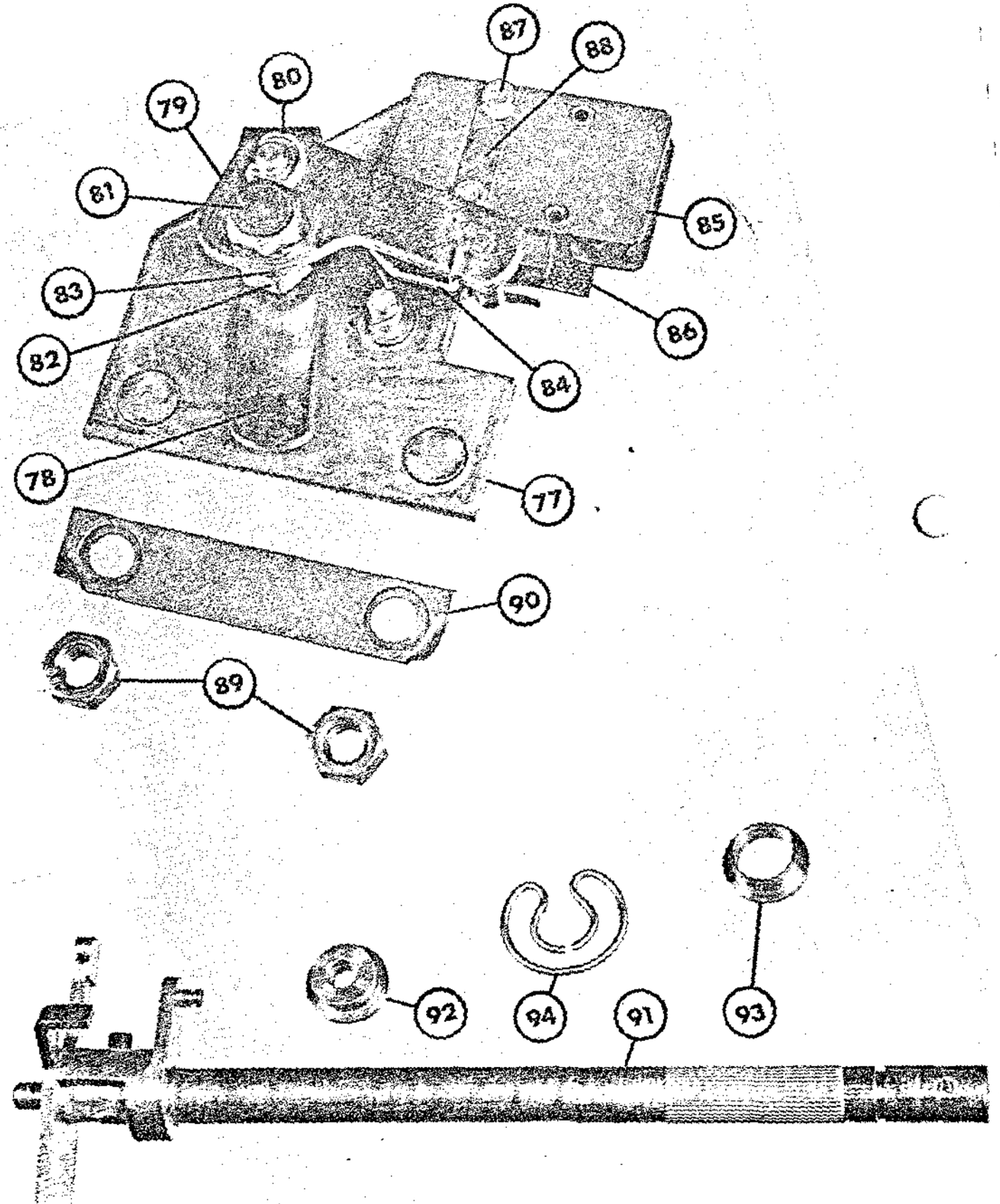

C-3-

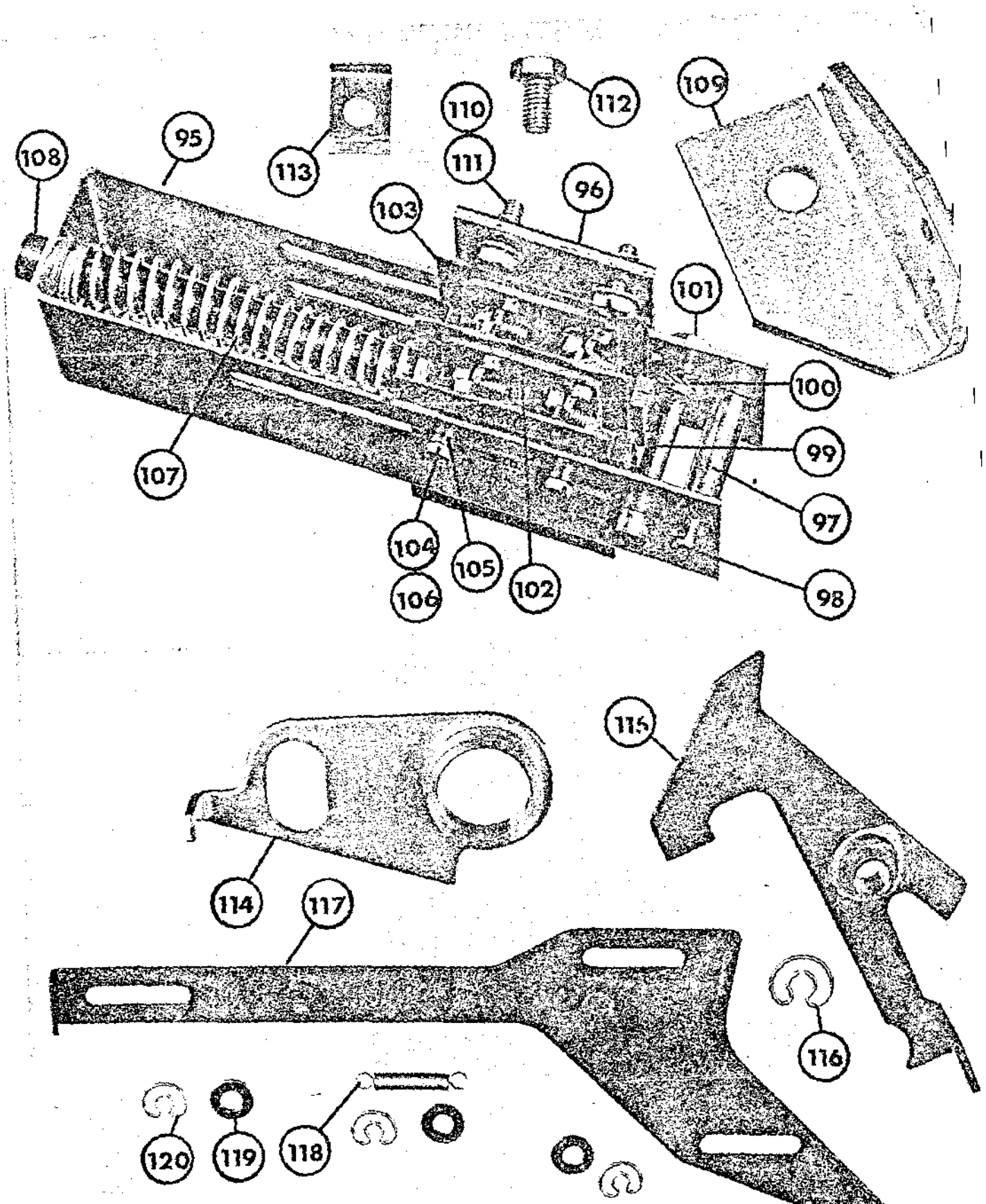
108
95
113
110
111
112
109
96
103
101
100
99
97
107
104
105
102
106
98
115
114
117
116
120
119
118

C-3-443
JUNE 1972
FIG. 8

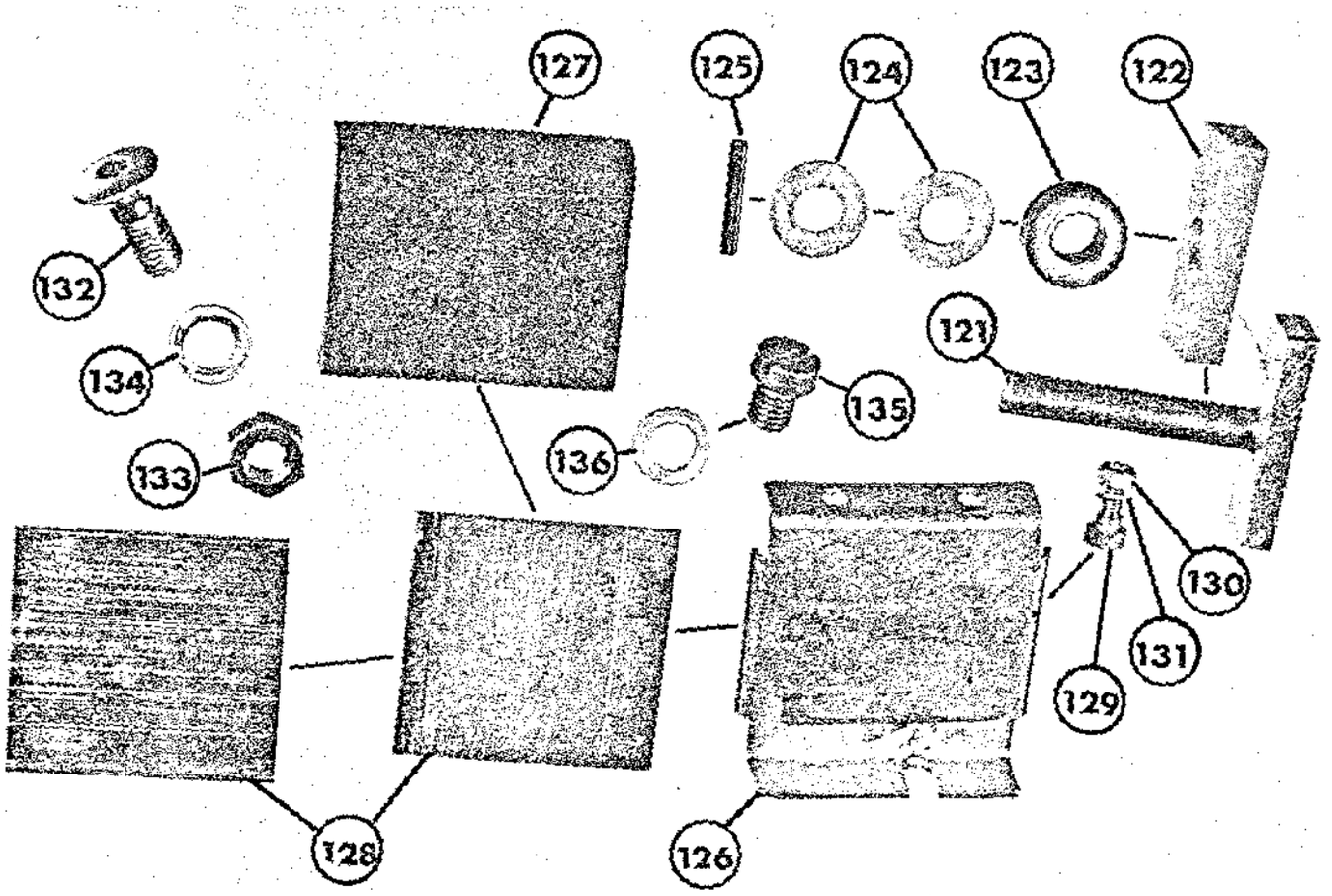

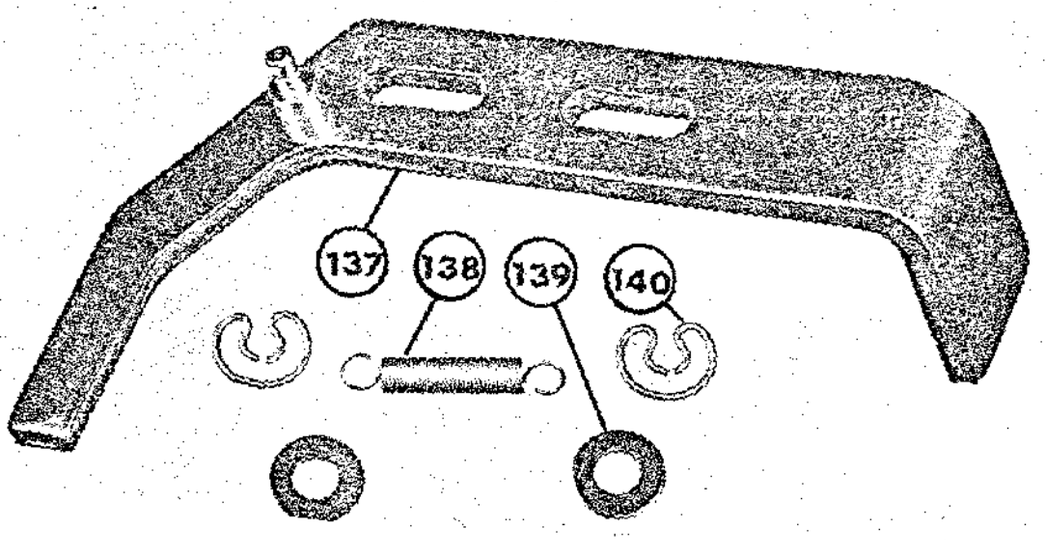

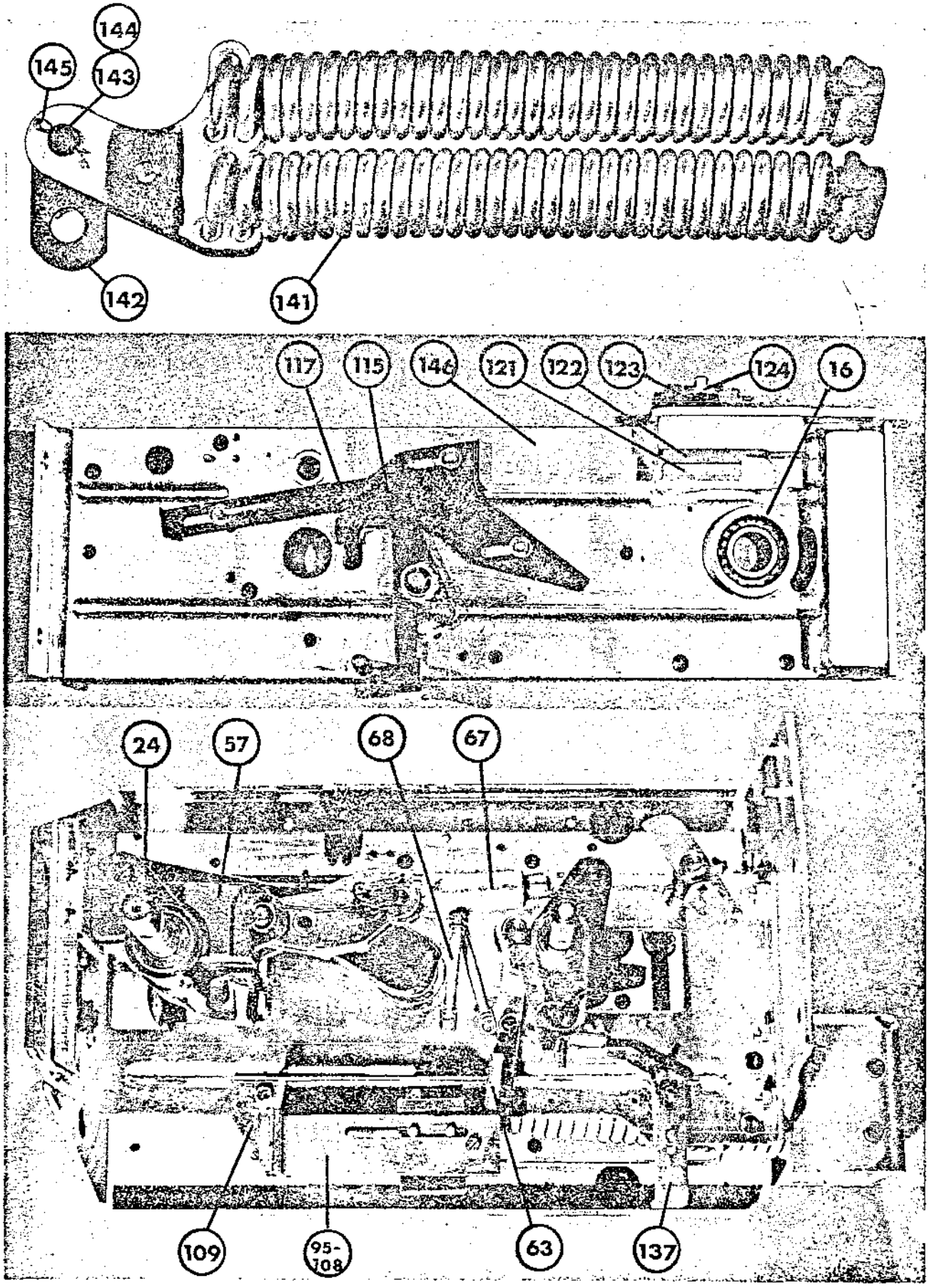
144
145
143
142
141
117
115
146
121
122
123
124
16
24
57
68
67
109
95-108
63
137

C-3-443

JUNE 1972
FIG. 10

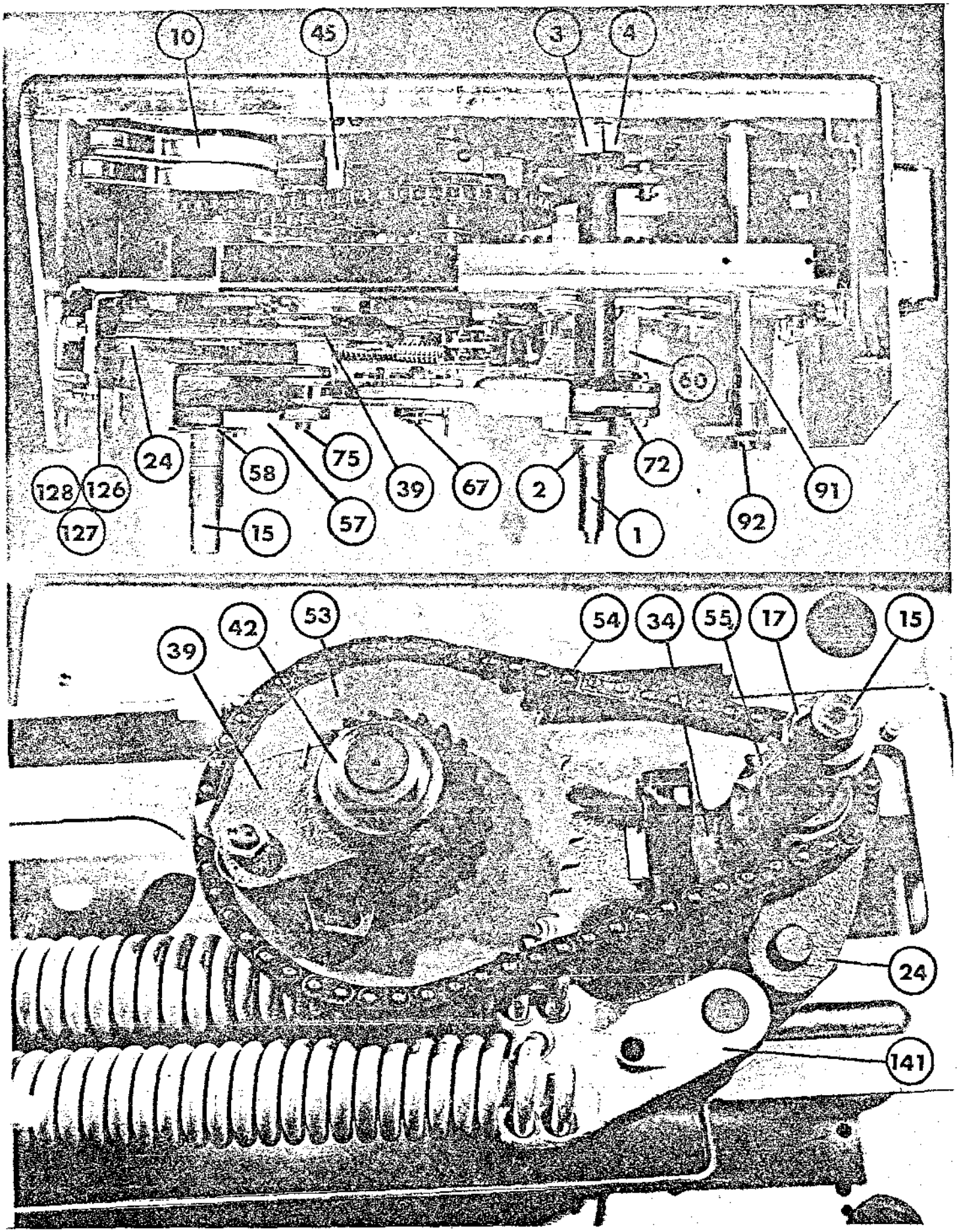

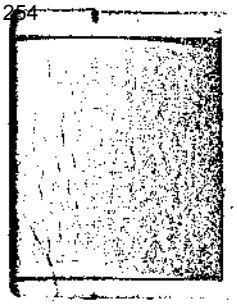

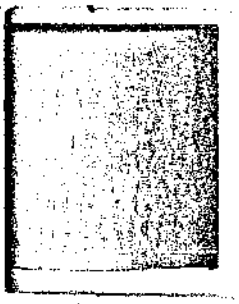

INSTRUCTIONS FOR FITTING MOULDED BOOTS TO BUSBAR JOINTS

The busbar joints in Federal Pioneer switchgear are covered with epoxy boots. In general the main busbar run uses boots which are held in position by nylon screws. Other boots are held in position by nylon straps.

To fit boots to the main busbar runs at the joining sections of the switchgear it is necessary to spring the boot open to pass over the joint bolts, etc. Care should be taken that these boots are opened to a minimum.

In cold weather, it is advisable to warm the boot before applying, to save breakage. In extremely cold weather it is also advisable to warm the joint if trouble is experienced.

When switchgear is split for shipment, spare boots will be supplied.

On other joints where the nylon straps are fitted, the two halves of the boot should be fitted in position and the straps pulled tight and twisted with a pair of pliers. The excess strap can then be cut off.

Some straps are fitted with a nylon catch. The strap is pulled tight through the eyelet provided, then folded back under the catch. Excess strap can then be cut off.

Bolts in busbar joints made in the field must be torqued to the figures given before the joint boot is fitted.

Bolt	Foot-Lb. Torque
3/8"	15 - 28
7/16"	20 - 50
1/2"	30 - 60

Class of bolt used in Federal Pioneer switchgear GRD 5 minimum.

FEDERAL PIONEER

INSTRUCTIONS

C-3-621

June 1, 1976

INSTRUCTIONS FOR TAPING BUS-JOINTS

Pack duxseal around the joints to make them smooth. Wind 10 mil thick, ¾" wide varnished cambric tape half lap, making sure to overlap the Epoxy bar insulation for at least 2". Pull tape snug.

For 5KV switchgear use 5 layers wound half lap.

For 15KV switchgear use 10 layers wound half lap.

Cover V.C. tape with one layer of cotton tape wound half lap. Leave the ends of V.C. tape visible.

Paint the finished joint with red Glyptal to complete.

INSTRUCTIONS

CONTROL AND INSTRUMENT SWITCHES

TYPES SB-1, SB-9 AND SB-10

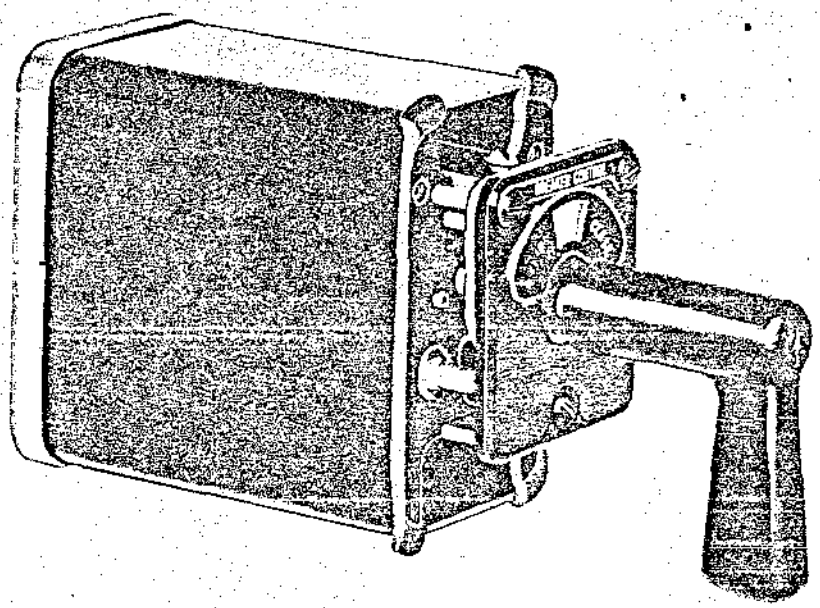

These instructions do not purport to cover all details or variations in equipment nor to provide for every possible contingency to be met in connection with installation, operation or maintenance. Should further information be desired or should particular problems arise which are not covered sufficiently for the purchaser's purposes, the matter should be referred to the nearest office of Canadian General Electric Company Limited.

CONTENTS

PAGE

INTRODUCTION 5
APPLICATION 5
RATING 5

RECEIVING AND STORAGE 5
RECEIVING 5
STORAGE 5

DESCRIPTION 6
CONSTRUCTION 6
CONTACT IDENTIFICATION 6
ENCLOSURES AND MOUNTING 6

INSTALLATION 6

OPERATION 7

MAINTENANCE 8
REPAIR AND REPLACEMENT 8
Movable Contacts 8
Fixed Contacts 9
Cams, Barriers, Moving-Contact Supports, Etc. 9
Switch Dis-Assembly 9
Switch Assembly 9
Shaft Change 10

RENEWAL PARTS 10

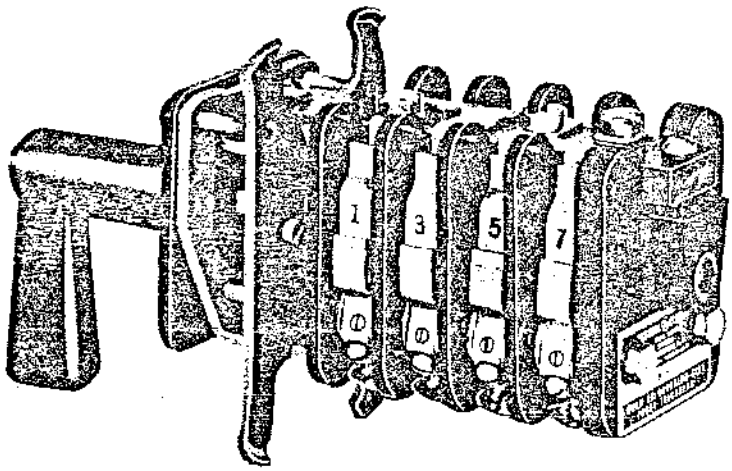

Fig. 1 Type SB-1 Switch without Cover

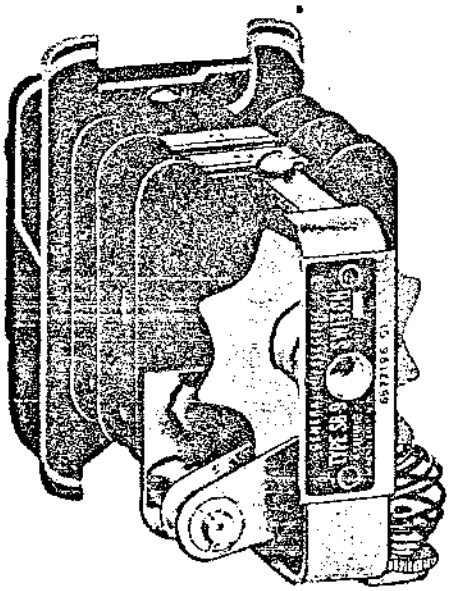

Fig. 2 Type SB-9 Switch without Cover

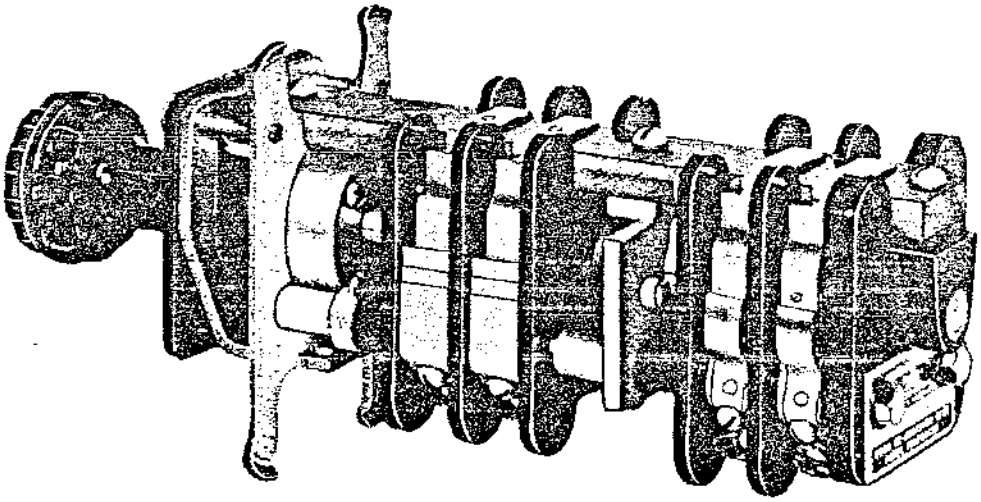

Fig. 3 Type SB-10 Switch without Cover

CONTROL AND INSTRUMENT SWITCHES
TYPES SB-1, SB-9, AND SB-10

INTRODUCTION

The Type SB-1 switches (see cover illustration and Fig. 1) are multi-pole rotary switches with cam-operated contacts. They have their positioning device or return spring located between the front support and first barrier while the Type SB-9 (see Fig. 2) has the positioning device or return spring located at the rear of the switch. The Type SB-9 also has better insulation to ground, more substantial bearings, and long life cams.

The Type SB-10 switches (See Fig. 3) combine contacts operated by rotation of the shaft, as in the SB-1 and 9 switches, with contacts operated by a lateral motion (push or pull) of the shaft. Only two lateral positions of the shaft are possible. Interlocks are usually provided so the push-pull contacts can be operated only in specific rotary positions of the switch, and also so the rotary contacts can be operated in only one lateral position of the shaft--either push or pull.

NOTE: Instructions for Type SB-1 switches also apply to superseded Type SB-7 switches.

APPLICATION

The Type SB-1, SB-9 and SB-10 switches are primarily intended for the control of electrically operated circuit breakers, small motors, magnetic switches and similar devices, and for the transfer of meters, instruments and relays. The Type SB-1 switch is suitable for most applications, but where the switch is subject to abnormally frequent operation (approximately 100 operations or more per hour), more durable cams are required, in which case the Type SB-9 switch should be ordered.

RATINGS

The switch rating is 300 volts, 20 amperes continuous, and 250 amperes for 3 seconds. A special 600 volt rating is available.

The interrupting rating depends on several factors; namely, voltage, current, and inductance of the circuit. It is often necessary to connect several contacts in series to secure sufficient interrupting capacity. The interrupting ratings in Table 1 are based on the inductance of the average trip coil

TABLE 1

CIRCUIT VOLTS	INTERRUPTING RATINGS - AMPERES					
	NON-INDUCTIVE CIRCUIT			INDUCTIVE CIRCUIT		
	NUMBER OF CONTACTS					
	1	2 in Series	4 in Series	1	2 in Series	4 in Series
24 d-c	6.0	30.0		4.0	20.0	30.0
48 d-c	5.0	25.0	40.0	3.0	15.0	25.0
125 d-c	2.7	11.0	25.0	2.0	6.25	9.5
250 d-c	0.75	2.0	8.0	0.7	1.75	6.5
600 d-c	0.25	0.45	1.35	0.15	0.35	1.25
115 a-c	40.0	75.0		24.0	50.0	
220 a-c	25.0	50.0		12.0	25.0	40.0
440 a-c	12.0	25.0		5.0	12.0	20.0
550 a-c	6.0	12.0		4.0	10.0	15.0

RECEIVING AND STORAGE

RECEIVING

Immediately upon receipt of a switch, examine it for any damage sustained in transit. If injury or rough handling is evident, file a damage claim at once with the transportation company and promptly notify the nearest Canadian General Electric Apparatus Sales Office.

The switches are completely assembled and packed in individual cartons before shipment.

STORAGE

If the switches are for stock purposes or not for immediate installation, they should be left in the shipping carton and stored in a clean dry location.

DESCRIPTION

CONSTRUCTION

All types of these switches are built up of a series of individual stages, each nested into the other, plus a common fixed contact support, operating shaft, front support and rear support (see Fig. 5). The complete stack is tied together with two tie bolts threaded into the front support. Each rotary stage consists of an insulating barrier carrying one or two moving contacts, and two or three cams on the shaft which operates the moving contacts. A push-pull stage is similar to the rotary stage except only one cam is used. Each moving contact and its associated fixed contact on the fixed contact support constitute a complete switch contact.

CONTACT IDENTIFICATION

The movable contacts are marked for identification following a standard system. Starting with the stage next to the panel, the contacts on the right side--looking toward the rear--are given odd numbers beginning with "1" (see Fig. 1), and the contacts on the left side even numbers beginning with "2". Occasionally, a contact is omitted from a stage. If so, the corresponding number is also omitted.

ENCLOSURES AND MOUNTING

The basic switch design is for panel mounting and includes a molded cover as shown on the front cover. When requested, switches are furnished assembled in various enclosures, such as the fabricated-metal enclosure for wall mounting, the watertight enclosure, and the explosion-proof enclosure. When conditions require the switch to be operated immersed in oil, it is furnished mounted in an enclosure similar to the watertight enclosure except that the lower removable portion is filled with oil.

Switches for panel mounting are furnished with shafts and mounting screws suitable for mounting on panels 1/8 inch to 3/16 inches thick. When requested, shafts and mounting screws are furnished for 1, 1 1/2, or 2 inch panels. For intermediate thicknesses of panels, spacers are furnished to fill the excess space between the front support and the panel.

INSTALLATION

For panel-mounted switches, holes should be provided in the panel as shown in Fig. 4. The shaft hole is shown with a 1 1/8 inch diameter. This is done to provide one panel hole for all switches. The removable handle and lock handle switches require the 1 1/8 inch diameter hole, while a 1/2 inch diameter hole suffices for all other switches. For switches furnished in metal enclosures, mounting dimensions should be obtained from the approved outline drawings, or from the switches themselves.

To mount a fixed-handle switch on a panel, first remove the handle and escutcheon, including where provided, the position-indicating pointer and curved spring washer (saddle spring). Next, hold the switch in place on the back of the panel and insert the mounting screws through the escutcheon and panel into the switch front support, but do not tighten the mounting screws. Attach the pointer, saddle spring and handle. Align the escutcheon on the panel. Insert the mounting screws through the escutcheon and panel and place the spacers (if used) on the screws before putting the switch in place.

When mounting removable-handle switches be certain that the shaft of the switch is properly positioned, so the handle is easily removed, before the mounting screws are tightened.

Switches with a key lock in the handle have the dle attached to the escutcheon so the two parts are removed or installed as a unit. The shaft and handle are joined by a slotted coupling on the back of the escutcheon and these parts should be lined up before inserting the mounting screws.

When a back-of-board locking mechanism and separate (Yale) lock are furnished with a switch, the panel drilling shown in Fig. 4 is required. The lock should be installed first. Turn the key until the lever at the back of the lock is entirely within the barrel diameter, and remove the two knurled rings. Insert the barrel through the panel, from the front, with the spacing ring (where used) at the front of the lock and fasten it in place by tightening the knurled rings on the barrel behind the panel. With the cylinder in the locked position the lever on the back of the barrel should extend on the vertical center line towards the switch shaft. Turn the switch shaft to a locked position and mount the switch on the panel as directed in a previous paragraph, being careful to put the pin on the lock lever into the slot in the locking bolt of the mechanism. Operate the switch and check to see that the locking

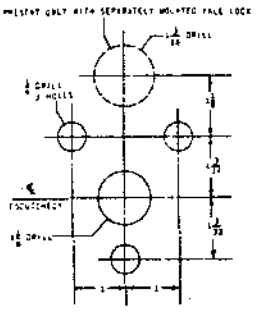

Fig. 4 Panel Drilling - Front View

bolt will easily enter each slot in the locking wheel. It may be necessary to loosen the lock and shift its position slightly to secure satisfactory operation of the locking mechanism. When the mechanism operates correctly, the lock must be re-tightened on the panel.

OPERATION

Type SB-1 and SB-9 switches are rotary cam-operated switches. Rotation of the switch shaft causes contacts to close or open according to the shape and setting of the cams in the various stages. Each stage has one or two contacts with two or three cams. On drawings these cams are designated A, B and C. (see Fig. 5). Cam (A) is the one nearest the panel and is the closing cam for the even numbered contacts. The (B) cam is next and is the opening cam for both contacts; cam (C) is farthest from the panel and is the closing cam for the odd numbered contacts. When a contact is omitted, its corresponding closing cam is omitted and a spacer substituted.

When the total rotation of the switch is more than 150 degrees, there is, due to the common opening cam (B), a certain limitation to the opening and closing of the contacts (see Fig. 6). If the No. 2 contact is closed at zero degree, then after the shaft has been rotated 180 degrees, the notch in the cam (B), which allows the contact to close, will be opposite the No. 1 contact and there will be nothing to hold the No. 1 contact open. Therefore, the No. 1 contact must be closed at this point or it must be omitted from the switch. In other words, whatever happens to one contact at any point in the periphery of the switch rotation must happen to its companion contact in the same stage when the switch is rotated 180 degrees from that point.

Generally, it is possible to design the switch so those contacts that close 180 degrees opposite

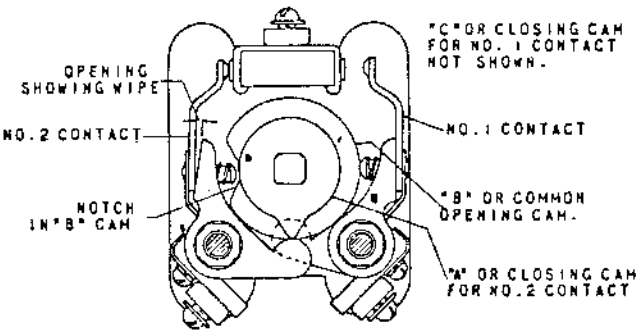

Fig. 6 Typical Section Showing Operation of Cams - Front View

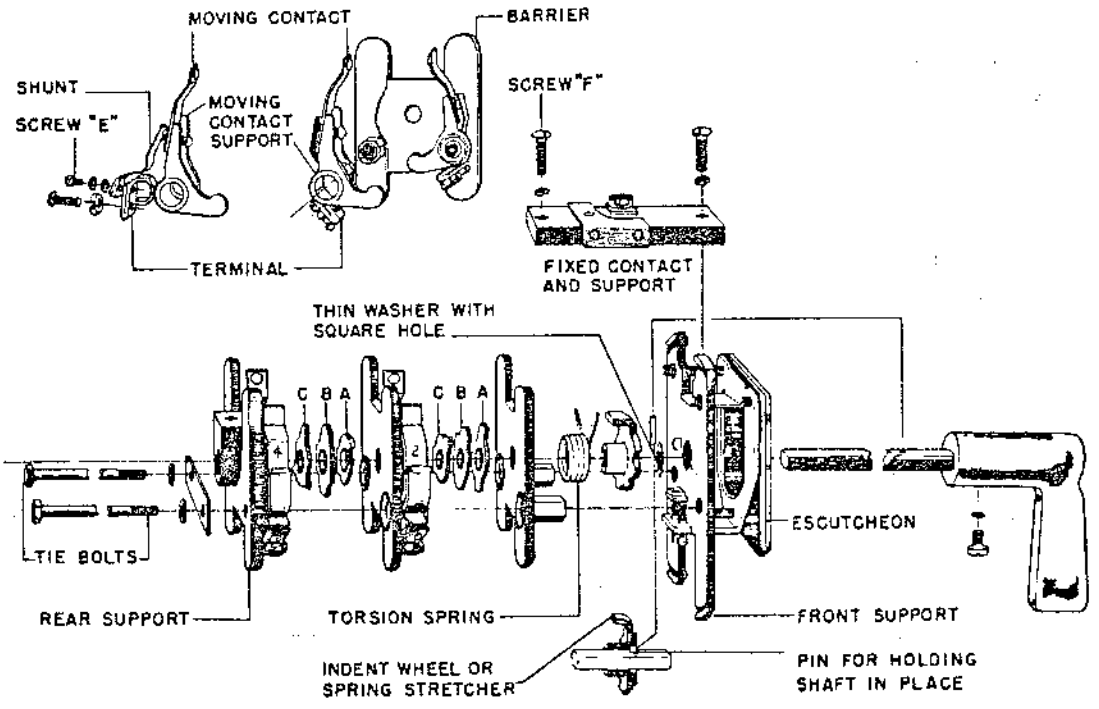

Fig. 5 Exploded View of Type SB-1 Switch

each other are in the same stage, but sometimes it is necessary to design the switch with only one contact per stage.

Some applications, particularly of momentary contact switches, which have a torsion spring to return the switch to a central-neutral position, require a contact action which lags behind the switch motion (lost motion or slip contacts). Such contacts use cams with a special loose fit on the shaft. When the shaft has turned far enough to close or open these contacts, it can be rotated 45 degrees in the reverse direction without moving the cams, but beyond this point, the cam moves with the shaft, and the contacts either open or close as the case may be.

Momentary contact switches have a torsion spring that returns the switch to a central or neutral position when the handle is released after operation to a side position or positions. This torsion spring is designed for a maximum of 90 degrees operation to each side of the central position. The torsion spring may have one end cut off or tied back in such a manner as to be effective on one side of the central position only. That is, the switch may have momentary contact to one side of the central position and maintaining contacts to the other side. Switches may also be furnished that are spring return from the extreme-end positions to a position in between the end position or positions and the central position.

In some momentary contact (spring return) switches, a locking device is provided by which the shaft may be held against the action of the torsion spring by pulling out the handle when the switch is turned to one of the side positions.

Type SB-10 switches, in addition to rotary contacts using SB-1 cams, have contacts operated by pulling out or pushing in the switch handle. The push-pull contacts are located at the front of the switch, with closing action provided by leaf springs and opening action by a cylindrical cam which slides over the shaft to the rotary contacts.

MAINTENANCE

At regular intervals, switches should be inspected for burning of the contacts, for broken shunts on the moving contacts and for contact wipe.

If contacts are slightly pitted, or coated with sulphide, scrape them gently with a sharp knife or dress with a fine file, such as a #00 dental file.

If the shunts are broken or the contacts badly pitted, they should be replaced as directed under "Repair and Replacement".

Contacts have sufficient wipe as long as there is an appreciable opening, with the contact closed, between the moving contact and the moving contact support (see Fig. 6) If there is no opening, it indicates that the parts of the moving contact support that bears on the cam or the cam itself has become worn and needs replacing as directed under "Repair and Replacement". Sometimes it is possible to secure a temporary repair by bending the moving contact so it has a smaller separation from the fixed contact when in the open position.

REPAIR AND REPLACEMENT

MOVABLE CONTACTS

If a movable contact is burned, or has a broken shunt, replace the entire contact assembly. To do this, position the switch so the contact to be replaced is open. Remove screw (E, Fig. 5) and its clamping washer. Press in on the top of the contact to release the tongue at the lower end and pull the assembly upward and off (see Fig. 7).

To replace the new contact assembly, slide it downward with its shoe (1, Fig. 8) on the inside of the support (3, Fig. 8), until the tongue (2, Fig. 8) at the lower end of the contact drops into the holding notch (4, Fig. 8) on the support. Bring the loose end of the shunt (3, Fig. 7) down to the terminal and fasten it in place with the clamping washer and

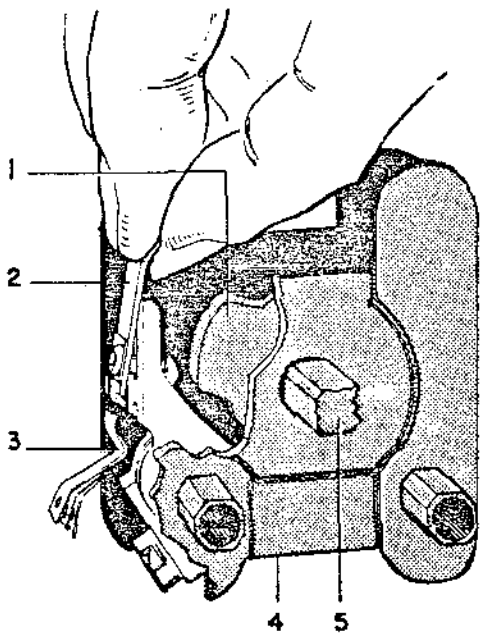

1. Cam
2. Movable Contact
3. Shunt
4. Barrier
5. Operating Shaft

Fig. 7 Removing Contact Finger

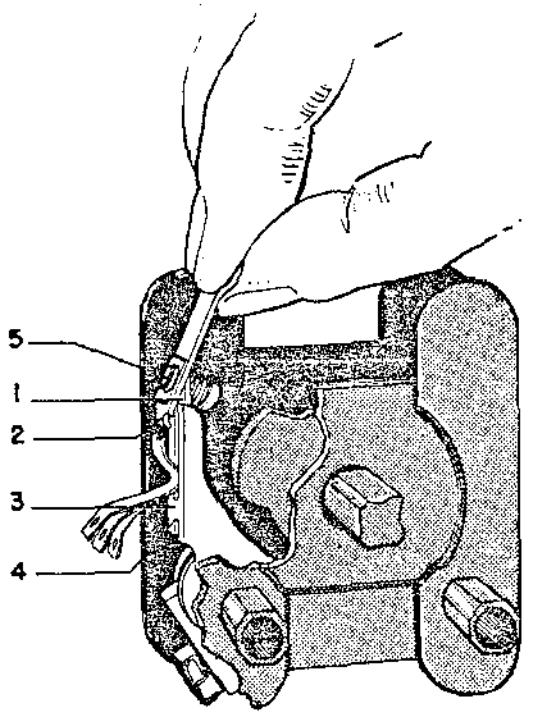

1. Shoe
2. Tongue
3. Support
4. Holding Notch
5. Movable contact assembly

Fig. 8 Installing New Contact Finger

screw (E). Avoid creasing or kinking the thin metal strips of the shunt. Operate the switch and observe whether the contacts meet squarely and simultaneously. The contacts can be adjusted by bending slightly with smooth-faced pliers. After adjustment there should be an appreciable opening, with the contacts closed, between the moving contact and the moving contact support.

FIXED CONTACTS

Damage to a fixed contact requires replacement of the complete assembly of fixed contacts and support. Remove screws (F, Fig. 5), change assemblies and replace the screws. Operate the switch and check the contact alignment.

On some switches the ball and spring of the positioning device are carried in the fixed-contact support. Care must be exercised to prevent losing the ball and spring when removing the fixed-contact support. The ball and spring are replaced best, after the new fixed-contact support has been assembled on the switch, by removing the spring retainer on the top of the fixed-contact support, inserting the ball and spring, and replacing the retainer.

CAMS, BARRIERS, MOVING-CONTACT SUPPORTS, ETC.

When cams, barriers, moving-contact supports, etc., need to be replaced or changed, the switch should be removed from the panel and disassembled on a bench and re-assembled with replacement parts. The moving-contact support and terminal are tightly assembled on the barrier in the factory. It is practically impossible to remove them from the barrier without damage to the parts or the barrier. If any of the parts require replacement it is best to secure a complete assembled replacement unit, including the barrier, moving contact support, and terminal, from the factory.

SWITCH DIS-ASSEMBLY

Before dis-assembling the switch, secure a drawing showing the cam arrangement in all the stages of the switch. Turn the switch shaft to the switch position corresponding to the cam arrangement. This is a twelve-o'clock position unless otherwise noted on the drawing. Remove the handle and fixed-contact support. Unscrew the tie bolts from the switch support, but leave them in the switch. Stand the switch on the bench, resting on the rear support, and slip the front support off the shaft being careful to hold the shaft in the switch so as not to pull it out of the cams in the rear stage. Do not lose the ball from the positioning device. Slide the shaft out just enough to remove the pin, through the shaft, which seats in the counterbore in the indent wheel or spring-stretcher (refer to Fig. 5). Do not slide the shaft out of the cams in the rear stage. Push the shaft back into the switch and slip off the indent wheel and thin washer that is assembled between the indent wheel and front support. Remove the first barrier to expose the cams for contacts No. "1-2".

Check these cams against the cam arrangement drawing. Be sure the cam arrangement drawing is fully understood before disturbing the cams.

On the drawing, the cams for each stage are usually shown in horizontal rows of three cams, or two cams and a spacer. Beside each horizontal row are the numbers of the contacts, such as "1-2", with which the cams are used. The vertical rows are lettered "A", "B", and "C". Cam (A) is the one removed first, working from the front end of the switch, cam (B) next, and cam (C) last (see Fig. 5). Unless otherwise stated, the position of the cams on the drawing are for the twelve-o'clock switch position.

Remove the cams from the first stage, and after making sure there are no jumpers holding the barriers together, remove the barriers. Continue removing cams and barriers until the damaged part is reached.

SWITCH ASSEMBLY

To assemble the switch, place the rear support on the bench, with the rear side down, and with the

bolt heads against the bench, so they are retained in the rear support, with the threaded ends extending vertically. Place the end of the shaft in the rear support so the shaft stands vertically. Turn the shaft to the twelve-o'clock position, or to the switch postion that agrees with the cam arrangement as stated on the drawing. The cams for the rear stage may now be assembled in the exact position shown on the drawing, cam (C) first, cam (B) second, and cam (A) last. The remaining barriers and corresponding cams are similarly assembled. When the front barrier, which carries no contacts, is in place, assemble the indent wheel (or spring stretcher and torsion spring) with the counterbored end toward the front of the support. Pull the shaft out just enough to permit the locking pin to be inserted through the shaft. Push the shaft back into the switch and slide the thin washer over the shaft. Slide the front support into place. Hold the stack of barriers together and turn the switch to a horizontal position with the moving contacts pointed up.

If it is a maintaining-contact switch with a large indent wheel, that is, with the ball and spring in the fixed-contact support, or if it is a spring-return switch, the tie bolts may now be screwed into the front support. Before tightening the tie bolts be sure the barriers are all properly nested.

If the switch is a maintaining-contact switch with a small indent wheel, slide the front support forward enough so the ball may be placed into the socket in the front support and line up a notch in the indent wheel with the ball in the front support. Then the front support may be slid back into place against the front barrier. Make sure the barriers are all properly nested before tightening the tie bolts.

The fixed contacts and support may now be assembled on the switch. If the switch has a position where all the contacts are open, turn it to this position to assemble the fixed contacts and support.

SHAFT CHANGE

When it is necessary to change the switch shaft, that is, install a longer or shorter shaft, the switch may be dis-assembled as directed, or the new shaft may be used to push out the old shaft as follows:

If there is room enough behind the panel to work on the switch, it is not necessary to remove the switch. Otherwise the switch must be removed to a bench vise where the front support can be supported firmly, with the fixed contact at the top.

Remove the fixed-contacts and support. Remove the rear support, being careful to leave the rear cams on the shaft. Slide the complete stack, including the indent wheel or spring stretcher, back on the shaft just enough to remove the locking pin that seats in the counterbore in the front end of the indent wheel. This leaves the shaft free to move through the switch.

First, check and make sure the tapped hole in the new shaft for the handle-holding screw aligns correctly with the hole in the old shaft. Then insert the new shaft into the rear end of the switch, and at the same time withdraw the old shaft from the front of the switch. The front end of the new shaft should touch the rear end of the old shaft at all times so that all the cams are on one shaft or the other and never loose within the switch.

Replace the locking pin. If the positioning ball has become dislodged, replace it in the manner previously described. Replace the rear support, tie bolts, and fixed contacts and support. Check for proper operation of the switch using the new shaft.

RENEWAL PARTS

When ordering renewal parts make references to the figures of this bulletin and specify the quantity required, describe the part and give the complete data from the nameplate at the rear of the switch.

Following is a list of parts which are most subject to wear or breakage and which are recommended for stocking. The number stocked will vary depending on severity of service and time required to secure replacement.

PART	FIG.
1. Movable Contact Assembly	8 (5)
2. Fixed Contact and Support	5

RECOMMENDED STOCK		
5 STAGES	10 STAGES	20 STAGES
5	8	18

One per switch unless there are several switches with the same model number, then one assembly for every three switches is sufficient.

DST-2 5KV and 15KV Breaker Table of Spare Parts

C-3-600-1
March, 1978

Supercedes
C-3-600-1—Dec. 74
(Page 1)

FEDERAL PIONEER

ALWAYS PROVIDE SERIAL NUMBER OF BREAKER WHEN ORDERING.
Prices Subject to Change Without Notice.

Sketch	Description	Qty. per Breaker	Part Number	Type of Breaker KV-MVA	Ampere Rating	Stock Number	Net Price Each
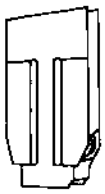	Arc Chute	3	W5281-D-0906-A	5-250	1200, 2000	528109063A	$ 800.00
			W5281-D-1133-A	5-350	1200, 2000, 3000	528111335A	800.00
			W5281-D-1000-A	15-250, 15-500	1200, 2000	528110002A	1125.00
			W5281-D-1000-B	15-750	1200, 2000, 3000	528110002B	1125.00
	Fixed Arcing Contact	3 pairs	LH 126928GR3	5-250	1200, 2000	525023702	35.00
			RH 126928GR4			525023907	
			LH 124050GR1	5-350	1200, 2000, 3000	525016706	
			RH 124050GR2			525016900	
			LH 126928GR1	15-500, 15-750	1200, 2000	525023303	
			RH 126928GR2			525023508	
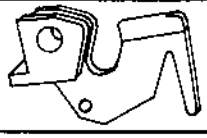	Moving Arcing Contact	3	125631	5-250	1200, 2000, 3000	525022102	98.00
			124060	5-350	1200, 2000, 3000	525017508	
			126927	15-750	1200, 2000, 3000	525023605	
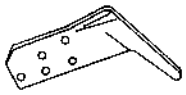	Moving Arcing Contact	3	123836	15-500	1200, 2000	525016501	51.00
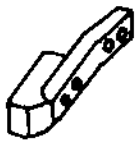	Main Fixed Contact	48	126770GR1	5-250	1200	525022501	8.00
		48	126770GR2	5-250	2000	525022706	
		24	126770GR3	15-500	1200	525022900	
		48	126770GR3	5-350, 15-750	1200	525022900	
		48	126770GR4	15-500, 15-750	2000	525023109	
		48	126770GR4	5-350	2000, 3000	525023109	
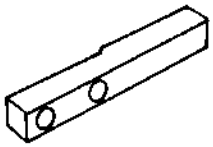	Leading Finger for Moving Contact	3 pairs	128442/1	5-250	1200	525024105	5.50
			128442/2			525024309	
		6	121047/1	5-350, 15-750	1200	525013707	
		6	124701/1	5-250 5-350, 15-750	2000	525020703	
		6	124701/2	5-350	3000	525020908	
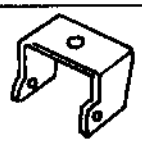	Flexible Connection for Fixed Arcing Contact	3	124162	5-250	1200, 2000	525017907	5.00
				15-500, 15-750	1200, 2000, 3000	525017907	
			124053	5-350	1200, 2000, 3000	525017109	
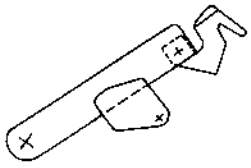	Moving Contact (Complete)	3	123623GR1	5-250	1200	525015300	195.00
			125594GR1	5-250	2000	525021904	330.00
			124055GR1	5-350	1200	525017303	215.00
			124561GR1	5-350	2000, 3000	525019705	395.00
			124055GR2	15-750	1200	525021157	320.00
			124561GR2	15-750	2000	525021203	450.00
			125135GR2	15-750	3000	525021408	500.00
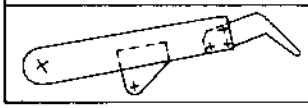	Moving Contact (Complete)	3	125136GR1	15-500	1200	525021106	153.00
			125138GR1	15-500	2000	525021300	190.00

Form 1048A

Prices are F.O.B. Winnipeg, with freight allowed to destination. All sales taxes are extra.
Minimum order $50.00 TNIP. Refer to part number when ordering.

DST-2 5KV and 15KV Breaker Table of Spare Parts

C-3-600-1
March, 1978

Supercedes
C-3-600-1—Dec. 74
(Page 2)

FEDERAL PIONEER

ALWAYS PROVIDE SERIAL NUMBER OF BREAKER WHEN ORDERING.

Prices Subject to Change Without Notice.

Sketch	Description	Qty. per Breaker	Part Number	Type of Breaker KV-MVA	Ampere Rating	Stock Number	Net Price Each
	Fixed Arcing Contact Spring	6	121042	15-500	1200, 2000	525012905	$ 1.75
			123663	5-250	1200, 2000	525016307	
				5-350, 15-750	1200, 2000, 3000	525016307	
	Rotating Moving Arcing Contact Spring	3	123631	5-250, 5-350 15-750	1200, 2000, 3000	525015505	2.00
	Main Fixed Contact Spring	12	123659	15-500	1200	525016102	1.75
		24	123659	5-250, 5-350	1200, 2000, 3000	525016102	
				15-500	2000	525016102	
				15-750	1200, 2000, 3000	525016102	
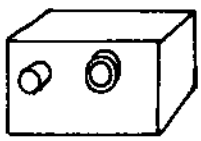	Type AEM Mechanism (specify mechanism type and circuit breaker reference)	1	AEMS	5-250, 15-500	1200, 2000	525032859	1100.00
			AEMG	5-350	1200, 2000, 3000	525032906	1200.00
				15-750	3000	525032957	
				15-750	1200, 2000	525032957	
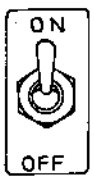	Lockout Switch 2 pole lockout switch for internal control	1	1551B5598	ALL	ALL	525026108	14.00
	Lockout switch with one extra spare contact	1	1552B5598	ALL	ALL	525025909	16.00
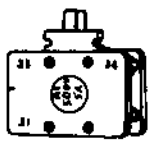	Latch Check Switch	1	122103GR4	ALL	ALL	525014109	12.00
	Spring Limit Switch	2					
				Applied Voltage			
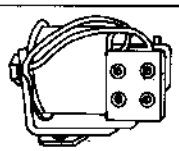	Shunt Close Assembly	1	119003/2 (Specify Voltage)	48V DC		528114997A	30.00
				115V AC		528114997B	
				125V DC		528114997C	
				250V DC		528114997D	
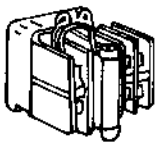	Y Relay Assembly (Anti Pumping Device)	1	K-M DIL 00L (Specify Voltage)	48V DC		200750101	48.00
				120V AC		200750209	
				125V DC		200750306	
				250V DC		200750403	
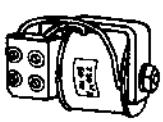	Shunt Trip Assembly	1	119003/3 (Specify Voltage)	24V DC		528114989D	29.00
				48V DC		528114989A	
				125V DC		528114989B	
				250V DC		528114989C	
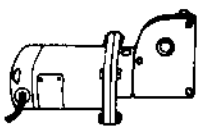	Universal Spring Charging Motor (with gear box)	1	119975B/4 (Specify Voltage)	48V AC/DC		525007901	275.00
				120V AC/DC		525008109	320.00
				240V DC		525008304	320.00

Prices are F.O.B. Winnipeg, with freight allowed to destination. All sales taxes are extra.
Minimum order $50.00 TNIP. Refer to part number when ordering.

262 (C.)

5594-1

INSTRUCTIONS FOR MOTOR OPERATOR FOR USE WITH CIRCUIT BREAKERS TYPES NF, HF, NFJ, HFJ, NJL HJL, NM & HM

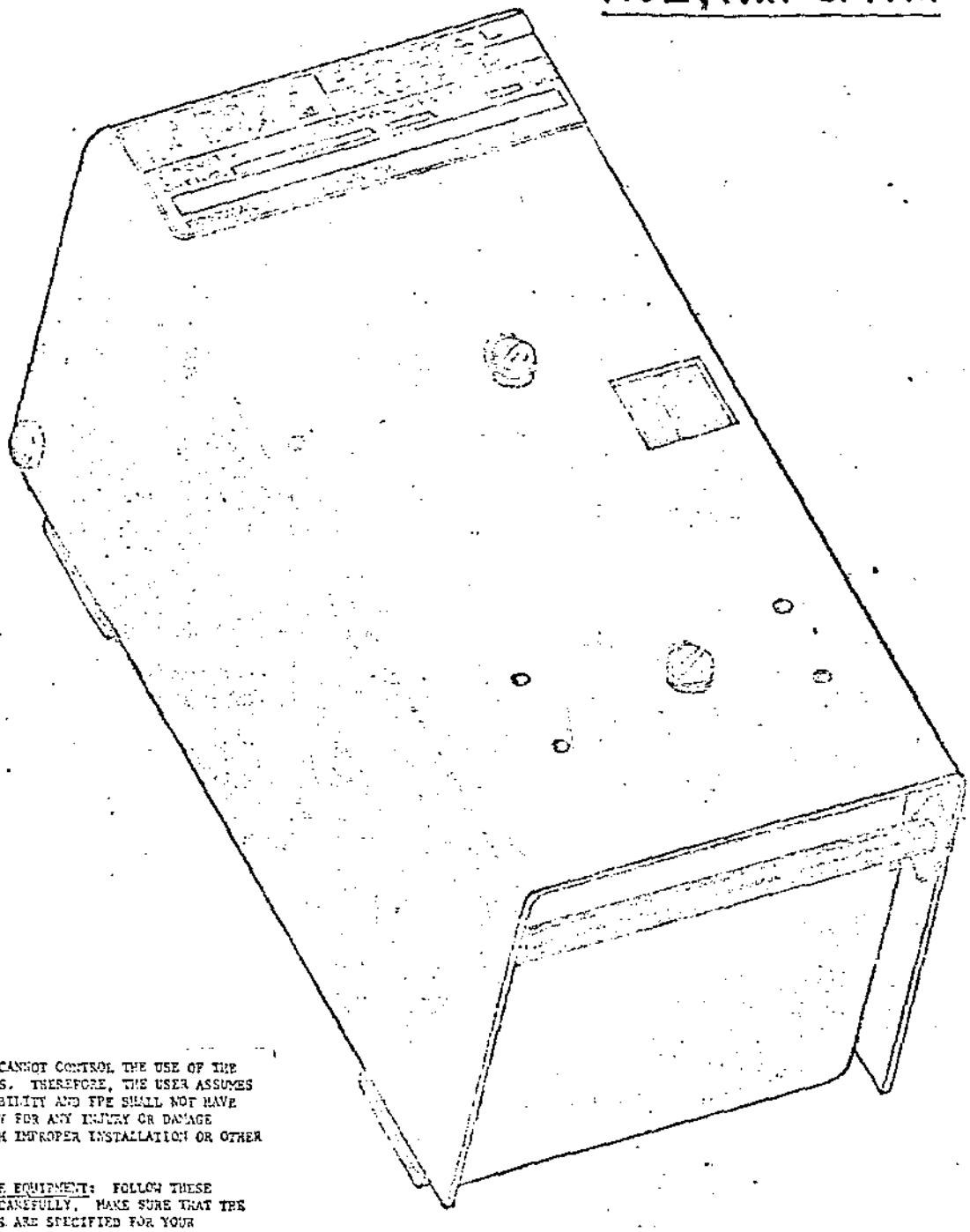

NOTICE: FPE CANNOT CONTROL THE USE OF THE ENCLOSED ITEMS. THEREFORE, THE USER ASSUMES FULL RESPONSIBILITY AND FPE SHALL NOT HAVE RESPONSIBILITY FOR ANY INJURY OR DAMAGE RESULTING FROM IMPROPER INSTALLATION OR OTHER MISUSE.

DEENERGIZE THE EQUIPMENT: FOLLOW THESE INSTRUCTIONS CAREFULLY. MAKE SURE THAT THE SUPPLIED ITEMS ARE SPECIFIED FOR YOUR APPLICATION. IF IN DOUBT, CONTACT YOUR LOCAL FPE REPRESENTATIVE OR WRITE TO:

FEDERAL PACIFIC ELEC. CO.
250 AVENUE L
NEWARK, N. J., 07101

FPE

DESCRIPTION

A motor-operated mechanism is designed to open, close and reset a circuit breaker by remote control. The motor-operated mechanism accessory kit consists of a motor, motor frame, actuator, cover, ball-nut and screw assembly, limit switch, a terminal board, and mounting plate. The kit is supplied as a unit with mounting hardware.

In an operating installation, the customer must supply normally open ON and OFF push buttons, external wiring, a control power source, and any control circuitry.

OPERATION

With the breaker and operating mechanism in OFF position, press the ON button to energize the motor. The motor turns the screw moving the ballnut to engage the actuator which moves the circuit breaker handle to ON. When the handle reaches the ON position, the control circuit is disconnected by the limit switch. (The limit switch is activated by a switch actuator on the side plate of the operating mechanism actuator.)

When the OFF button is pressed, the motor is again energized. The actuator then operates in reverse direction until the breaker handle reaches the OFF position and the limit switch de-energizes the control circuit.

When the circuit breaker trips automatically, there is no external trip indication, unless a separate bell alarm accessory is provided to actuate a warning device. It is necessary to press the OFF button to reset the breaker.

AUTOMATIC RESET

With automatic reset, the breaker can be reclosed after tripping with the ON button only; it is not necessary to press the OFF button first. An auxiliary

switch, to return the breaker to RESET-OFF position after it has tripped on a fault, is available as an accessory. The switch is mounted inside the breaker and wired in parallel with the OFF button. When the breaker trips, the switch closes to actuate the mechanism to move the breaker handle to the OFF-RESET position. When the motor-operated mechanism has reset the breaker, the limit switch again opens the circuit. To use automatic reset the ON pushbutton must be SPDT type and wired as in Fig. 3.

MANUAL OPERATION

Press the cover release toward the underside of the cover, and lift the cover to disengage the handle. The position of the operating mechanism does not affect manual operation. To return to electrical operation, press the appropriate button to move the mechanism to the breaker handle position. If the cover does not close easily, or the actuator does not engage the handle properly, follow the instructions on the endwall of the mechanism, for proper alignment.

INSTALLATION

CAUTION: The circuit breaker should be in OFF position and de-energized before accessories are installed. If the power supply cannot be de-energized, use all possible safety precautions including insulated handle tools, rubber gloves, and rubber floor mat. Circuit Breakers and components should be handled, inspected installed and removed only by qualified personnel in accordance with accepted safety precautions.

PLEASE OBSERVE THE MOUNTING PROCEDURE FOR THE SPECIFIC BREAKER TYPE. BE SURE WIRE HARNESS IS INSTALLED TO PREVENT CRUSHING WIRE LEADS IN HINGE. (Fig. 1)

NJI.-HJL

MOUNTING THE BREAKER

1. MOUNT THE BREAKER USING THE TWO 1/4 - 20 x 1 1/2" FILLISTER HEAD MACHINES SCREWS AND TWO NO. 250 LOCKWASHERS IN "LINE" END OF BREAKER AND THE TWO 1/4 - 20 x 3 5/8" MOUNTING STUDS IN THE "LOAD" END OF THE BREAKER.

2. REMOVE THE TWO "LINE" END COVER SCREWS.

MOUNTING THE OPERATOR

1. OPEN THE OPERATOR'S COVER BY PULLING UP ON THE RELEASE BAR ON THE END OF THE OPERATOR. THIS WILL EXPOSE THE OPERATOR'S BASE PLATE.

2. WITH THE OPERATOR'S COVER OPEN, ALIGN THE OPERATOR'S BASE PLATE ON THE BREAKER WITH THE COVER HINGES TOWARD "LINE" END OF BREAKER AND THE HOLES IN THE BASE PLATE ALIGNED WITH HOLES IN THE "LOAD" END MOUNTING STUDS AND THE "LINE" END COVER HOLES.

3. SECURE OPERATOR'S BASE PLATE TO BREAKER WITH THE TWO 8/32 x 1 3/4" PAN HEAD SCREWS, TWO NO. 8 LOCKWASHERS, AND TWO NO. 8 FLATWASHERS ON THE "LINE" END AND THE TWO 1/4 - 20 x 2 1/2" ROUND HEAD SCREWS, TWO NO. 250 LOCKWASHERS, AND TWO NO. 250 FLATWASHERS ON "LOAD" END.

4. IF OPERATOR HAS BEEN WIRED EXTERNALLY, THE COVER SHOULD NOT BE CLOSED UNTIL THE WIRING STRAP AND INSULATING SLEEVES HAVE BEEN INSTALLED. SEE FIGURE 1.

5. TO CLOSE THE OPERATOR'S COVER, THE BREAKER HANDLE MUST BE ENGAGED BETWEEN THE ROLLERS ON THE ACTUATOR. IF THE MOTOR COVER DOES NOT CLOSE EASILY OR THE ROLLERS DO NOT ENGAGE THE BREAKER HANDLE PROPERLY, FOLLOW THE INSTRUCTION ON THE ENDWALL OF THE OPERATOR'S BASE PLATE FOR PROPER ALIGNMENT. NOTE: WHEN THE BREAKER IS "TRIPPED" APPROXIMATELY 30 LBS. OF FORCE IS REQUIRED TO CLOSE THE OPERATOR'S COVER BECAUSE THE OPERATOR MECHANISM IS BEING FORCED TO RESET THE BREAKER.

FACTORY-MOUNTED MECHANISMS

If the motor-operated mechanism is provided as a factory-mounted accessory, the mechanism must be removed before the circuit breaker can be wired and mounted. Follow instructions given for mounting the mechanism, in reverse order.

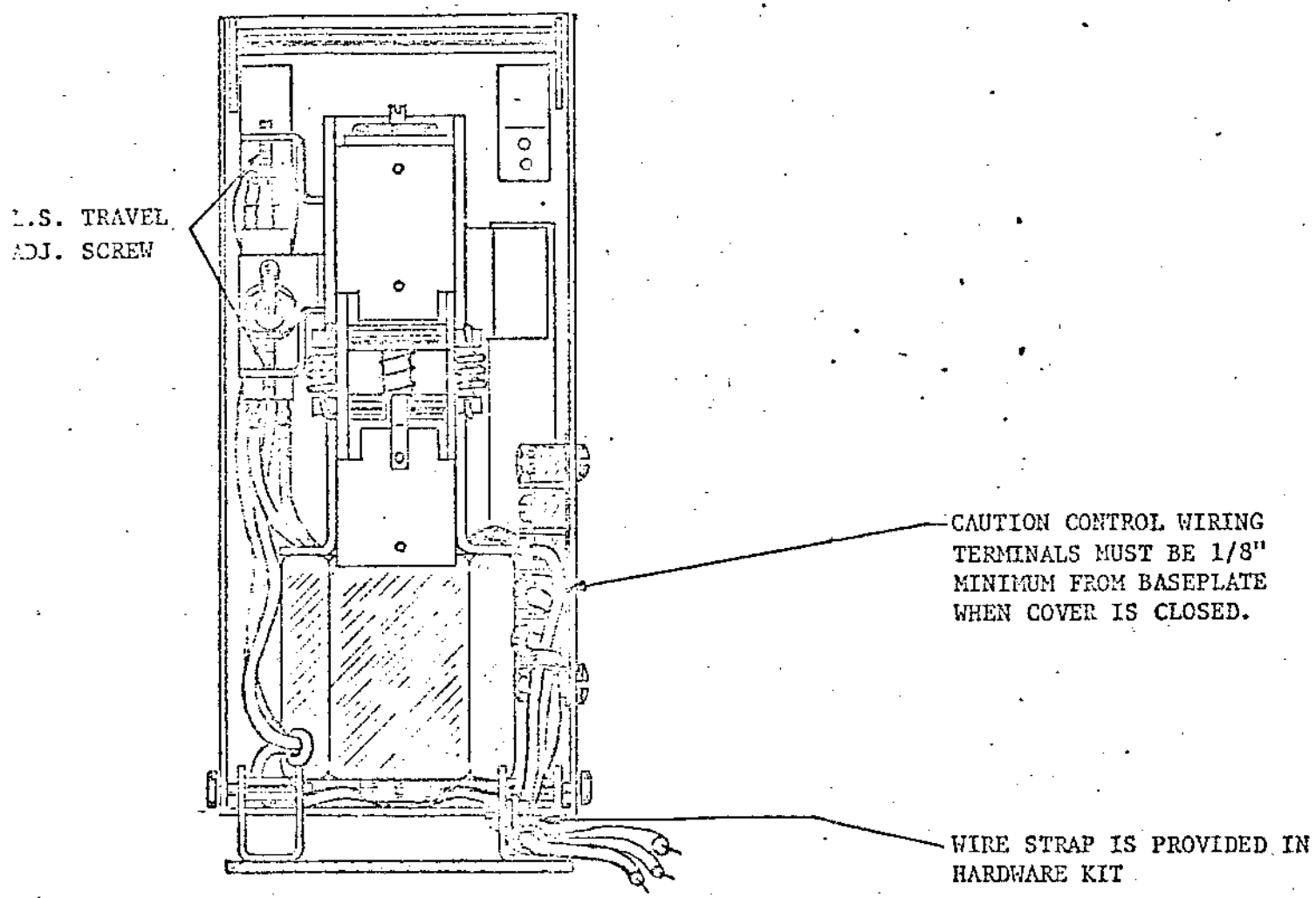

FIG. 1

MOTOR-OPERATED MECHANISM ACCESSORY KITS

Kit Cat. No.	Voltage	Max. Control Circuit Inrush Current, Amps	Average Inrush 1st 2 Half-Cycles Amps R.M.S.	Amps R.M.S. Running Current	Opening Time Seconds	Closing Time Seconds
RF-3	120v AC	10.6 (peak)	5.0	3.2	1/6	1/5
	125v DC	8.7	...	2.4	1/6	1/5
RF-2	240v AC	5.4 (peak)	3.6	2.2	1/6	1/5
	250v DC	4.7	...	1.4	1/6	1/5
RF-8	24v DC	18	...	1.1	1/4	1/3
RF-9	48v DC	12	...	1.1	1/5	1/
RJ-3	120v AC	10.6 (peak)	5.9	3.5	1/4	1/3
	125v DC	8.7	...	2.9	1/5	1/5
RJ-2	240v AC	5.4 (peak)	4.1	2.8	1/4	1/3
	250v DC	4.7	...	1.7	1/5	1/5
RJ-8	24v DC	18	...	1.4	1/4	1/3
RJ-9	48v DC	12	...	1.4	1/5	1/4
RM-3	120v AC	10.6 (peak)	6.5	3.5	1/4	1/3
	125v DC	8.7	...	2.9	1/4	1/4
RM-2	240v AC	5.4 (peak)	4.7	2.8	1/4	1/3
	250v DC	4.7	...	1.7	1/4	1/4
RM-8	24v DC	18	...	1.4	1/4	1/3
RM-9	48v DC	12	...	1.4	1/5	1/4

WIRING DIAGRAM RF, RJ, RM MOTOR OPERATED MECHANISM

ALL SWITCH CONTACTS SHOWN WITH CIRCUIT BREAKER IN THE "ON" POSITION

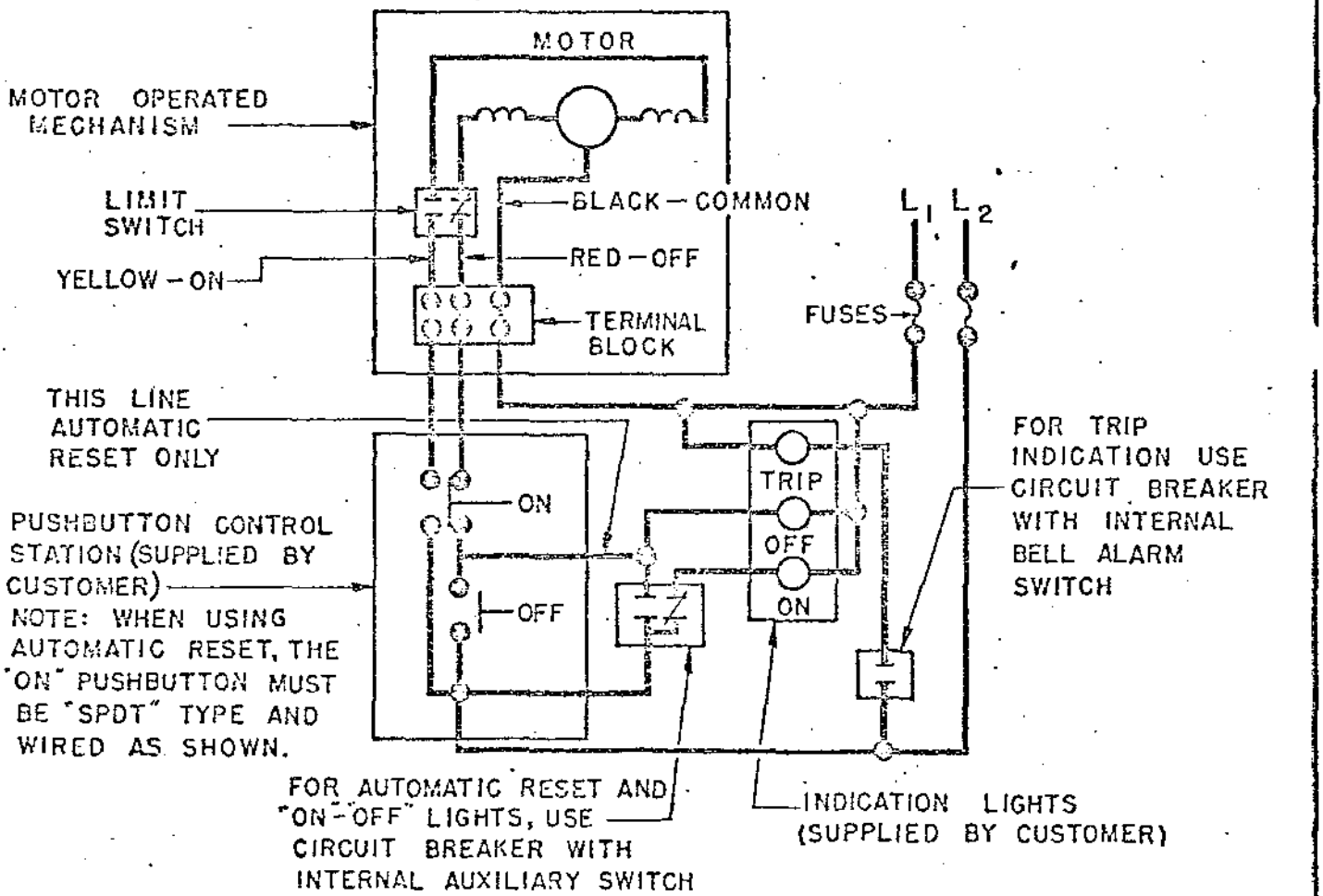

FIG. 2

Operating mechanism should be grounded to conform to local requirements.

Recommended fusing for operating mechanism motor circuit:
120V AC 125V DC.....9/10 amp time delay
240V AC 250V DC.....4/10 amp time delay

These instructions do not purport to cover all details or variations in equipment nor to provide for every possible contingency to be met in connection with installation, operation or maintenance. Should further information be desired or should particular problems arise which are not covered sufficiently for the purchaser's purposes, the matter should be referred to Federal Pacific Electric Company.

Westinghouse Electric Corporation
Distribution Apparatus Division
Bloomington, Indiana 47401

December, 1975
New Information and Supersedes P.D. 38-136, pages 1-2, dated November 1974 and P.D. 38-126, pages 1-2 dated December 1973
E. D. C./1931-PL

Indoor-Outdoor
Altitude 0-10,000 feet
3-468 KV

Station Arrester Type CPL Controlled Protective Level

CPL Station Arresters

CPL arresters assure lower discharge voltages and lower impulse and switching surge sparkover voltages which permit selection of transformers with multi-step reduced BIL's saving users thousands of dollars.

The performance characteristics of the CPL arrester are demonstrated by tests conducted in accordance with ANSI C62.1.

Table I – Electrical Protective Characteristics

Arrester Rating KV Rms Maximum Valve-Off or Maximum Reseal Rating ①	Maximum Circuit Voltage Phase-to-Phase KV Rms		Maximum Front-of-Wave Impulse Sparkover	Maximum 100% Impulse Sparkover 1.2 x 50 Wave	Maximum Switching Surge Sparkover	Minimum 60 Hz Sparkover	Maximum Discharge Voltage with Discharge Current, 8 x 20 Wave					
	Ungrounded Neutral 100% Arrester ②	Effectively Grounded Neutral 80% Arrester ②					1.5 KA	3 KA	5 KA	10 KA	20 KA	40 KA
			KV Crest ③	KV Crest ④	KV Crest ⑤⑥	KV Rms ⑦	KV Crest					
3	3	3.75	10	10	10	4.5	4.7	5.3	6	6.7	7.7	8.9
4.5	4.5	5.63	16	15	14	6.8	7	8	8.9	10.1	11.5	13.3
6	6	7.5	19	18	18	9	9.3	10.6	11.9	13.4	15.3	17.7
7.5	7.5	9.38	24	22	24	11.3	11.6	13.3	14.8	16.7	19.1	22.1
9	9	11.25	28.5	25	28	13.5	13.9	16	17.8	20.1	22.9	26.5
12	12	15	36	32	35	18	18.5	21.3	23.7	26.7	30.1	35.3
15	15	18.75	45	40	43	22.5	23.1	26.6	29.6	33.4	38.2	44.1
16	18	22.5	52	47	51	27	27.7	31.9	35.5	40.1	45.8	52.9
21	21	26.25	63	56	59	31.5	32.3	37.2	41.4	46.8	53.4	61.7
24	24	30	71	62	65	36	36.9	42.5	47.3	53.4	61	70.5
27	27	33.75	80	72	73	40.5	41.5	47.8	53.3	60.2	68.7	79.3
30	30	37.5	89	80	81	45	46.1	53.1	59.2	66.9	76.3	88.1
36	36	45	107	96	95	54	55.3	63.7	71	80.1	91.5	105.7
39	39	48.75	115	104	101	58.5	60	69	76.9	86.8	99.1	114.5
45	45	56.25	134	119	116	67.5	69.2	79.6	88.7	100.2	114.4	132.1
48	48	60	143	128	124	72	73.8	84.9	94.7	106.8	122	140.9
60	60	75	170	144	136	81	102	110	118	132	150	168
72	72	90	204	173	163	97	122	132	141	159	180	202
90	90	112.5	255	216	203	122	153	166	176	199	225	252
96	96	120	272	231	218	130	163	177	188	212	240	269
108	108	135	305	260	245	146	183	199	212	238	270	303
120	120	150	339	289	272	162	204	221	235	265	300	336
132	132	165	373	317	299	178	224	243	259	291	330	370
144	144	180	407	346	326	194	244	265	282	318	360	404
168	168	210	475	404	381	227	285	309	329	371	420	471
180	180	225	509	430	400	243	305	331	353	397	450	505
192	192	240	543	460	426	259	326	353	376	424	480	538
204	204	255	577	490	453	276	346	375	400	450	510	572
216	216	270	611	519	479	292	367	397	424	478	545	605
228	228	285	640	547	506	308	387	419	446	503	570	639
240	240	300	679	577	533	324	407	441	470	530	605	673
258	258	322.5	893	620	573	348	438	474	505	569	650	723
264	264	330	709	635	586	356	448	485	517	582	665	740
276	276	345	742	664	612	373	468	507	540	609	690	773
288	288	360	774	692	640	389	489	529	564	635	725	807
300	300	375	806	721	666	405	509	551	588	662	755	841
312	312	390	838	750	693	421	530	574	611	688	780	874
396	396	495	1064	950	868	535	672	726	734	871	990	1109
420	420	525	1128	1005	921	567	713	770	826	924	1050	1176
444	444	555	1193	1055	973	600	753	814	873	977	1110	1243
468	468	585	1257	1110	1026	632	794	858	921	1030	1170	1310

Notes

① Maximum permissible continuous power frequency voltage across the arrester, line to ground, at which the arrester will perform its duty cycle. 50 or 60 Hz. Reference: For selection of arrester rating: ANSI C62.2 "Guide for Application".

② Grounded and ungrounded neutral systems are defined by EEI Pub. No. R-6 (NEMA Pub. No. 117) Appendix B and ASA Standards C84.1; "Preferred Voltage Rating."
For reference the same information is included in NEMA Pub. No. LA1.

③ These values based on requirements of ANSI C62.1 which require maximum rate of rise be 1200 kv/μs.

④ Highest 1.2 x 50 Wave Impulse Voltage that apparatus insulation is subjected to, since this voltage consistently produces arrester sparkover. (ANSI C62.1).

⑤ The switching surge discharge voltage will not exceed the maximum switching surge sparkover, for transmission line discharge requirements in accordance with Table III page 2.

⑥ Values to be used for 10 microsecond to sparkover in protecting a-c rotating machinery.

⑦ Power-frequency sparkover voltage shall be not less than 1.35 times rated voltage – for station class arresters rated 60 KV and above. (ANSI C62.1)

Arrester Insulation Withstand Test Voltages ANSI C62.1

The assembled insulating members of the CPL arrester or single unit will withstand impulse and power-frequency voltages between line and ground terminals in accordance with Table II.

Table II – Station Arresters

Voltage Rating of Arrester KV rms	Impulse Test 1.2 x 50 Microsecond Full Wave KV Crest① (BIL)	Alternating-Current 60-Hz Test Voltage KV, Rms 1-Minute Dry	10-Second Wet
3	60	21	20
4.5	75	27	24
6	75	27	24
7.5	95	35	30
9	95	35	30
12	110	50	45
15	110	50	45
18	150	70	60
21	150	70	60
24	150	70	60
27	200	95	80
30	200	95	80
36	200	95	80
39	250	120	100
45	250	120	100
48	250	120	100
60	350	175	145
72	350	175	145
90	450	225	190
96	450	225	190
108	550	280	230
120	550	280	230
132	650	335	275
144	650	335	275
156	750	385	315
180	825	465	385
192	900	465	385
204	1050	545	445
216	1050	545	445
228	1050	545	445
240	1050	545	445
264	1175	625	520
288	1300	680	565
276	1300	680	565
288	1300	680	565
300	1300	680	565
312	1300	680	565
336	1980	1020	840
360	2100	1090	890
444	2220	1150	940
468	2350	1210	990

① The values given apply for either positive or negative waves.

Cantilever strength:

The lateral force, such as line lead pull, that may be applied to the top of the arrester is determined by dividing the cantilever strength by the height of the arrester.

Arrester Rating (KV)	Cantilever Strength Inch-Pounds	Foot-Pounds
3-48	70,000	5,800
60-312	200,000	17,000
336-468	300,000	25,000

CPL arresters will withstand winds in excess of 120 mph and a 0.5 g earthquake shock.

Further Information

33-140 P WE A
33-141 D WE A
33-142 F WE A

Thermal Protective Characteristics

CPL arresters have high thermal discharge capabilities that exceed modern system requirements.

Table III tabulates transmission line discharge parameters and values.

Transmission line discharge tests, with 20 unit tests per arrester or prorated section, were made as specified by the industry standard, ANSI C62.1.

Table III – Transmission Line Discharge Performance

Nominal System Line-to-Line Voltage KV rms	Arrester Rating KV	Line Length Miles	Line Surge Impedance ohms	Per Unit Charge Voltage maximum line to ground crest
500 KV	396	250	300	2.5
	420	250	300	2.57
	444	250	300	2.64
	468	250	300	2.72
345	258	200	350	2.8
	264	200	350	2.9
	276	200	350	3.0
	288	200	350	3.1
	300	200	350	3.2
	312	200	350	3.3
230	180	250	400	>3.0
	192	250	400	>3.0
161	144	250	400	>3.0
	168	250	400	>3.0
138	120	250	400	>3.0
	132	250	400	>3.0
	144	250	400	>3.0
115	120	300	450	>3.0
	96	300	450	>3.0

Pressure Relief Protective Characteristics②

The fundamental technique of pressure relief is a Westinghouse "first" that was developed and patented in 1949. The "safe fault current" pressure relief ratings of CPL arresters meet and exceed ANSI C62.1 as shown in Table IV:

Table IV - High Current Test

Arrester Rating (KV)	ANSI C62.1 Standard – Class 1	CPL Rating
3-15	65000 Amperes RMS Sym.	66000 Amperes RMS Sym.
21-48③	40000 Amperes RMS Sym.	44000 Amperes RMS Sym.
60-192	40000 Amperes RMS Sym.	63000 Amperes RMS Sym.
240-294④	25000 Amperes RMS Sym.	63000 Amperes RMS Sym.
300-312	Not Given	63000 Amperes RMS Sym.
396-468	Not Given	63000 Amperes RMS Sym.

Low Current Test

Arrester Rating (KV)	ANSI C62.1 Standard	CPL Rating
3-48	400-600 Amperes RMS Sym.	465 Amperes RMS Sym.
60-294	400-600 Amperes RMS Sym.	530 Amperes RMS Sym.
294-468	Not Given	530 Amperes RMS Sym.

CPL arresters 3-312KV have exhaust ports providing directional venting of the gasses in the unlikely event of an arrester failure.
Directing the ionized gases is extremely important to prevent loss of adjacent apparatus from flashover.

② Pressure relief ratings for porcelain top arresters are not standardized. Above ratings apply to metal top arresters only.
③ 18 kv arrester included with these ratings.
④ Includes 204, 216, and 228 Kv ratings

Printed in U.S.A.

Westinghouse Electric Corporation
Distribution Apparatus Division
Bloomington, Indiana 47401

38-142 F WE A
Dimension Sheet

Page 5

December 1975
New Information and Supersedes 38-132
F WE A, Pages 1-4, dated May 1975, and
DS 38-122, pages 1-2, dated December, 1973
E, D, C/1981/DB

Indoor-Outdoor
Altitude 0-10,000 feet
24-468 KV

Station Arrester Type CPL Controlled Protective Level

Metal Top 396-468 KV

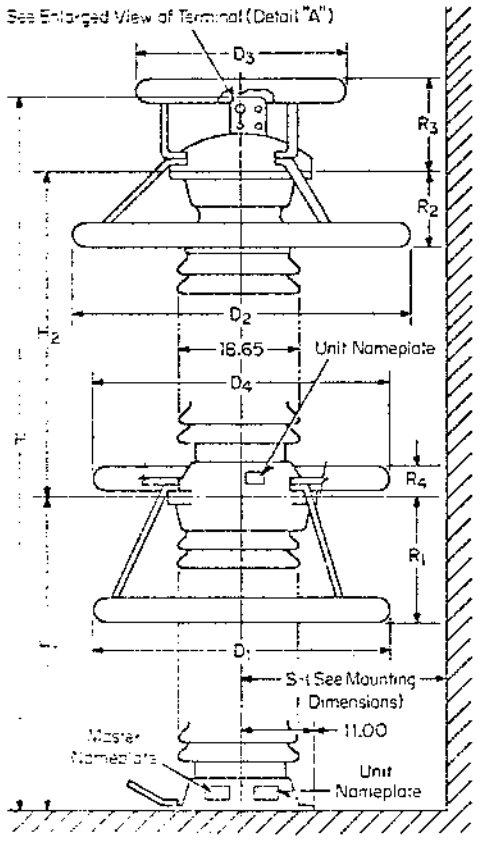

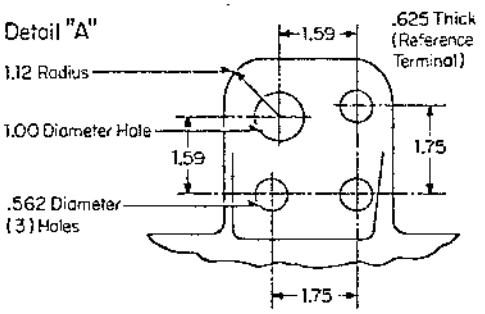

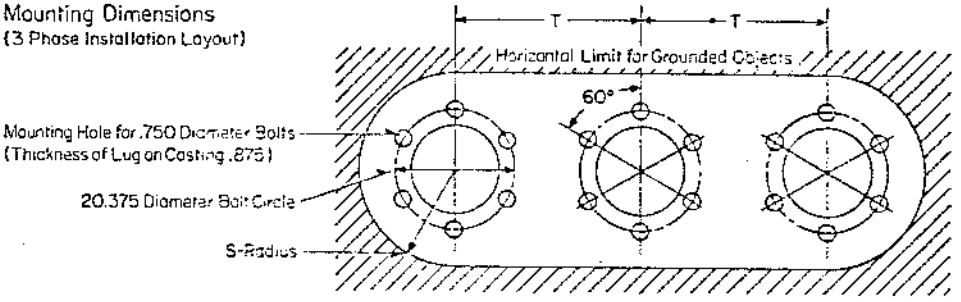

Figure 7 (O.D. 3889A14)

Style	Kv Rating	Dimensions (Inches) Heights H	H1	H2	Grading Rings D1	R1	D2	R2	D3	R3	D4	R4	Clearances S	T	Creep	Weight Lbs.	Figure
3691A39A02	396	204.17	98.43	98.43	50.00	24.88	55.00	11.38	30.75	12.88	50.00	3.00	139.00	166.00	497.52	2500	7
3691A42A02	420	212.67	102.68	102.68	50.00	24.88	55.00	11.38	30.75	12.88	50.00	3.00	147.00	174.00	519.52	2600	7
3691A44A42	444	230.67	111.68	111.68	50.00	24.88	55.00	11.38	30.75	12.88	50.00	3.00	153.00	185.00	576.52	2800	7
3691A46A82	468	230.67	111.68	111.68	50.00	24.88	55.00	11.38	30.75	12.88	50.00	3.00	161.00	188.00	576.52	2800	7

CPL Arrester Insulating Bases and Posts

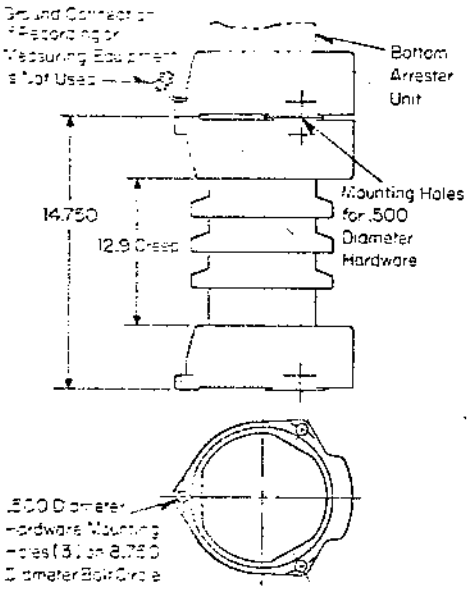

Gray S # 5559A33A01 O.D. 5559A33
Figure 8. Insulating Base (3-48 Kv)

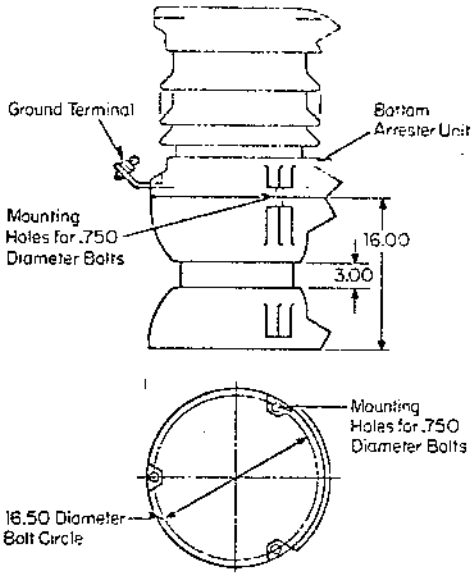

Gray S # 893A945A01 O.D. 898A053
Figure 9. Insulating Base (60-312 Kv)

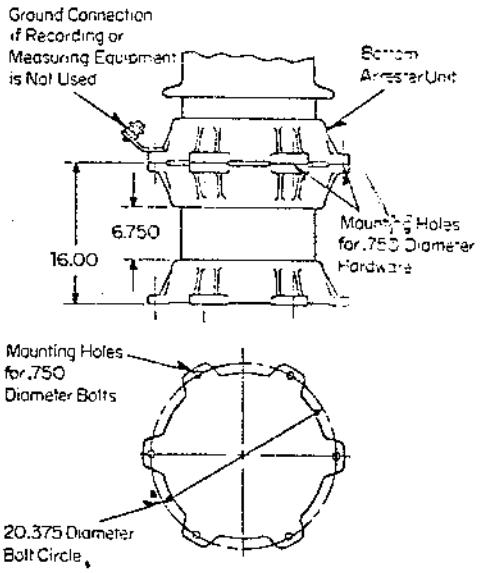

Gray S # 5039A06A01 O.D. 5039A16
Figure 10. Insulating Base (396-468Kv)

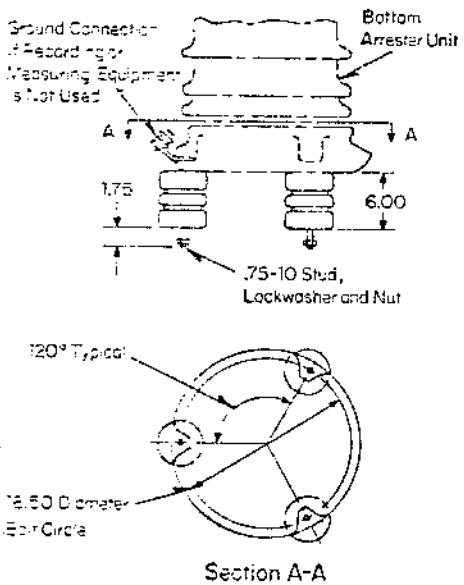

Gray S # 893A935A02 O.D. 5053A97
Figure 11. Insulating Posts (60-312 Kv)

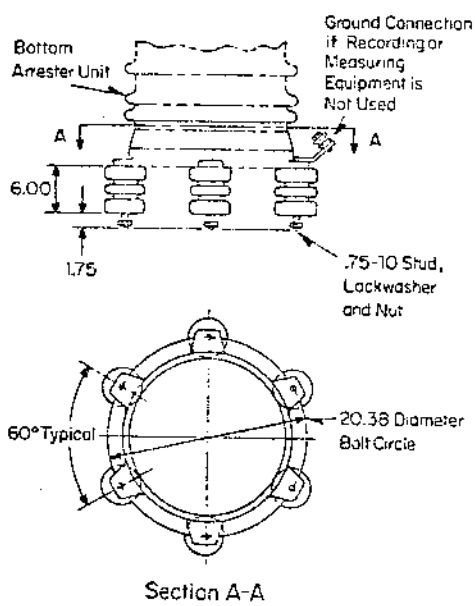

Gray S # 893A935A03 O.D. 5055A03
Figure 12. Insulating Posts (396-468 Kv)

Printed in U.S.A.

Westinghouse Electric Corporation
Distribution Apparatus Division
Bloomington, Indiana 47401

38-142 F WE A
Dimension Sheet

Page 7

December 1975
New Information and Supersedes 38-132 F WE A, Pages 1-4, dated May 1975, and DS 38-122, pages 1-2, dated December, 1973
E, D, C/1981/DB

Indoor-Outdoor
Altitude 0-10,000 feet
24-468 KV

Station Arrester Type CPL Controlled Protective Level

CPL Arrester Accessories and Brackets

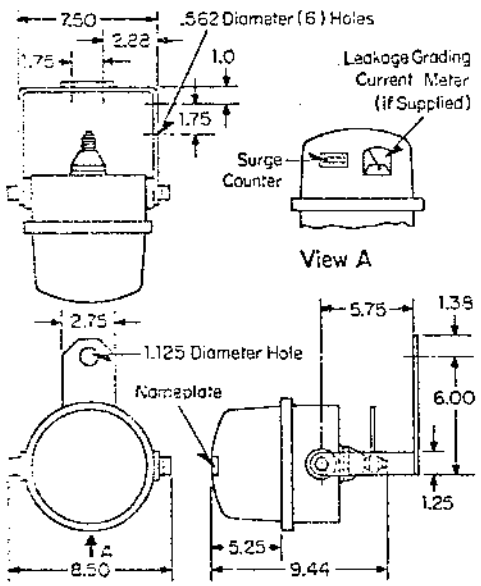

S*633A700A01 w/o Leakage Current Indicator O.D. 3865A30
S*633A797A01 with Leakage Current Indicator O.D. 3865A25
Figure 13. Discharge Counters (3-468 Kv)

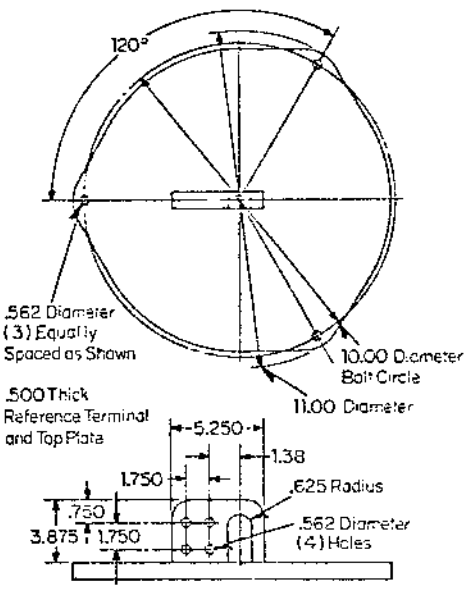

S*634A088A01 O.D. 5570A50
Figure 14. Line Terminal for Suspension Mounting (3-48 Kv)

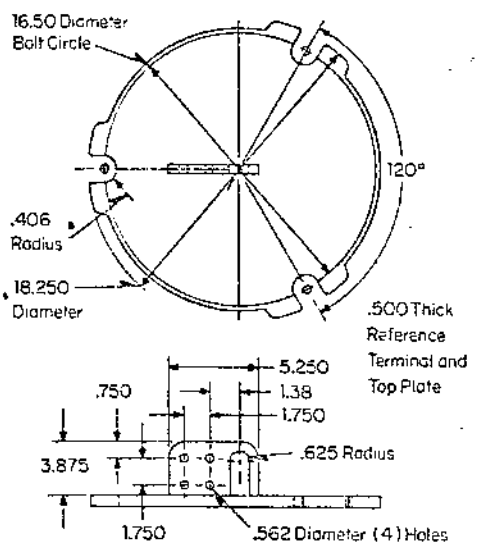

S*6462A99A01 O.D. 5038A94
Figure 15. Line Terminal for Suspension Mounting (60-312 Kv)

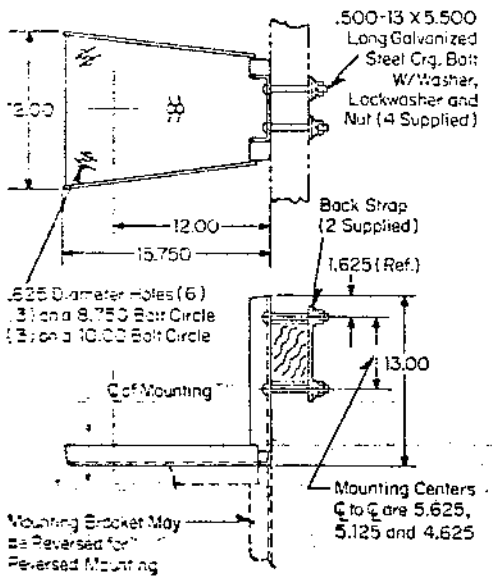

S*279C251A08 O.D. 6463A09
Figure 16. Single Crossarm Reversible Bracket (3-39 Kv)

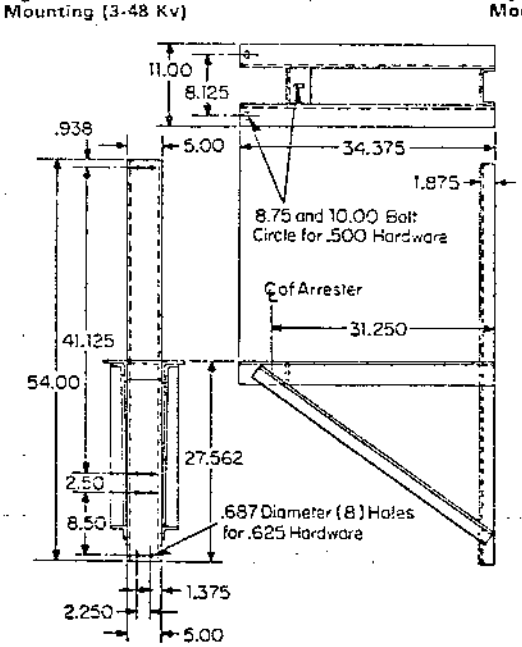

S*279C251A10 O.D. 6463A11
Figure 17. Wall Mounting Bracket (3-48 Kv)

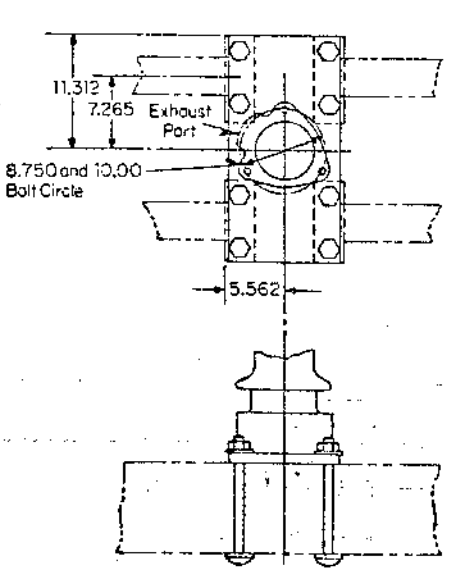

S*279C251A09 O.D. 6463A10
Figure 18. Baseplate (3-48 Kv)

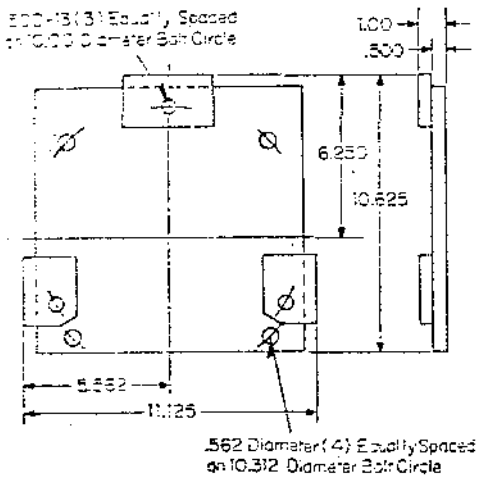

S & 634A753A01 O.D. 5555A75
Figure 19. Adapter Plate SV to CPL (3-48 Kv)

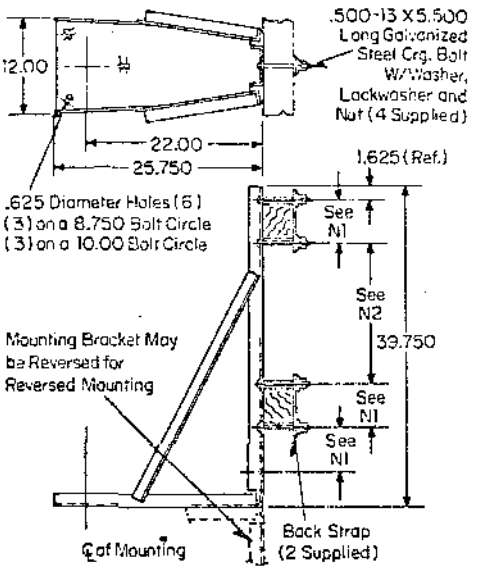

N1=Mounting Centers of Bolts are
4.875, 5.750, 6.125 and 7.00 Inches
N2=Mounting Centers of Bolts Ranges from 16.00 to 18.750

S & 279C251A07 O.D. 6463A08
Figure 20. Double Crossarm Mounting Bracket

Printed in U.S.A.

Further Information
38-140 P WE A
38-141 D WE A
38-146 T WE A

Westinghouse Electric Corporation
Distribution Apparatus Division
Bloomington, Indiana 47401

I.L. 39-211-1

INSTRUCTIONS FOR WEMCOL IMPREGNATED SURGE PROTECTION CAPACITORS

Surge protection capacitors are designed to protect rotating machines and other equipment against surges by reducing the rate of rise of surge voltage when connected from line to ground at the machine terminals. These capacitors are hermetically sealed and require no additional protection from the weather under ordinary service conditions.

Receiving

When unpacked, CAREFULLY INSPECT THE UNIT FOR DAMAGE AND CHECK THE NAMEPLATE TO BE SURE THE DESIRED RATING HAS BEEN RECEIVED. File a claim immediately with the carrier for any damages sustained in transit.

Installation

The nameplate voltage is the maximum continuous nominal rms voltage at which the unit is intended to operate. For three phase units, the voltage after the / indicates the maximum continuous nominal voltage from terminal to case. All units are designed for continuous operation up to 10% above nominal (nameplate) voltage, to accommodate system voltage regulation.

In applying single phase surge capacitors to three phase equipment, it is suggested that a capacitor voltage rating at least equal to the phase to phase voltage be selected. This is to accommodate phase to ground over-voltages which may occur during unbalanced grounding conditions. Three phase units are rated based on application to grounded wye systems. All units may be applied on systems with nominal frequencies of 25 to 60 Hertz without de-rating. The maximum permissible ambient temperature is 50°C.

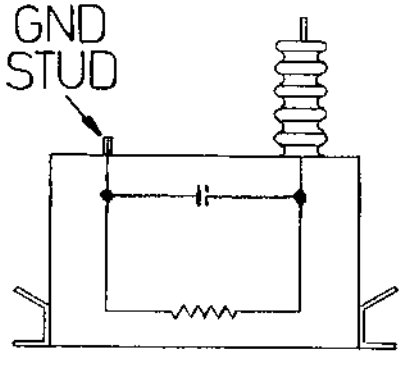

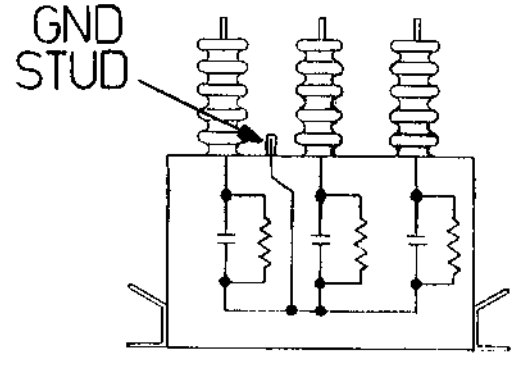

Effective March 1977

The parallel groove connectors will accommodate any combination of two conductors from #12 solid to #1 stranded wire. The terminal nuts should be tightened firmly, but avoid excessive force. (TORQUES OF MORE THAN 20 FOOT-POUNDS ARE NOT NECESSARY, NOR RECOMMENDED.) The capacitor should be protected by a lightning arrester to limit the surge voltage. Contact the nearest Westinghouse District Office for complete application data.

Maintenance

The capacitor should be inspected periodically after being placed in service to be sure that it continues to operate properly. Scratches or abrasions in the painted surfaces, especially in an outdoor location, should be touched-up with a good grade of outdoor paint. Minor fluid leaks due to mechanical damage to the case may be repaired by soldering as long as little or no liquid has been lost. Use only rosin and alcohol flux. Instructions should be obtained from the nearest Westinghouse Sales Office for returning units for repair.

CAUTION: ALLOW FIVE MINUTES AFTER DISCONNECTING TO PERMIT THE CAPACITOR TO DRAIN THROUGH THE INTERNAL DISCHARGE RESISTOR. THEN FOR SAFETY, SHORT CIRCUIT THE TERMINALS BEFORE HANDLING.

Since this product contains a combustible liquid (OSHA Class III-B, volume indicated on nameplate), the location of the capacitors should be chosen with consideration given to the possibility of fire damage in the event of capacitor failure and subsequent case rupture. See National Electric Code for limitations.

Disposal

This product contains Wemcol, a biodegradable impregnating fluid. Disposal should be in accordance with federal, state, and local regulations.

Westinghouse Electric Corporation

Distribution Apparatus Division, Bloomington, Indiana 47401

Printed in U.S.A.

INSTALLATION • OPERATION • MAINTENANCE

INSTRUCTIONS

TYPE AV RELAYS

Adjustable Voltage—Direct Current

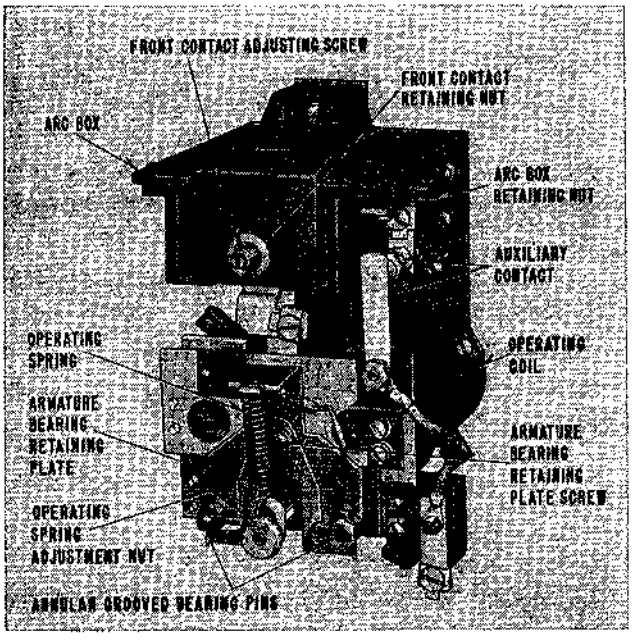

FIG. 1. Type AV Relay with One Auxiliary Contact

TYPE AV RELAYS are for general use where it is desired to open or close electrical circuits after a relatively small change in current or voltage in the relay circuit. The relays will respond to current or voltage changes as low as ten percent depending upon the setting of the individual relay.

The ratings of the main and auxiliary contacts are shown in Table No. 1. The main contact is of the single pole transfer type. The auxiliary contacts may be normally open or normally closed, as desired.

The magnet is designed for operating on direct current only. The operating coils are rated for continuous duty at the currents or voltages indicated in Table No. 3.

Mounting. The relay may be mounted on insulating panels only, using the two mounting holes in the base plate. The relay must be mounted in the vertical position with the arc box at the top.

OPERATION

The armature is supported by a bearing plate resting on two annular grooved pins which provide a frictionless knife-edge bearing and armature air gap adjustment. The operating spring is arranged so that the spring movement rather than the spring tension is varied by turning the adjusting nut.

The arc box is adjustable so that it may be moved to conform to the armature adjustment. The front contact may be adjusted to provide a contact gap of 1/16 to 5/16 of an inch.

Two ceramic permanent magnets provide the blowout for the main contacts. Since the contacts are of the transfer type, the ratings shown in Table No. 1 can only be applied to the contact on which the arc is blown upward.

The auxiliary contacts may be converted from normally open to normally closed by dismounting and reassembling the stationary contact (see Fig. 2); adjust the stationary contact accordingly. The moving contact must be reversed so that the silver contact buttons mate.

Table No. 1. CONTACT RATINGS

APPLICATION	INTERRUPTING RATING MAIN CONTACTS (Direct Current)		NOTE:
	230 V.	600 V.	Main contact wiring must be connected so that arc is blown upward. Normal polarity of rear contact is positive.
CONTACT — LINE E	5 Amps.	2 Amps.	
CONTACT — R_D — R — LINE E	230 V.	600 V.	
	10 Amps.	4 Amps.	

	FRONT CONTACT		BACK CONTACT	
LINE E	230 V.	600 V.	230 V.	600 V.
	5 Amps.	2 Amps.	1 Amp.	.4 Amp.

INTERRUPTING RATING—AUXILIARY CONTACTS (Direct Current)	
230 Volts—.5 Amp.	600 Volts—.15 Amp.

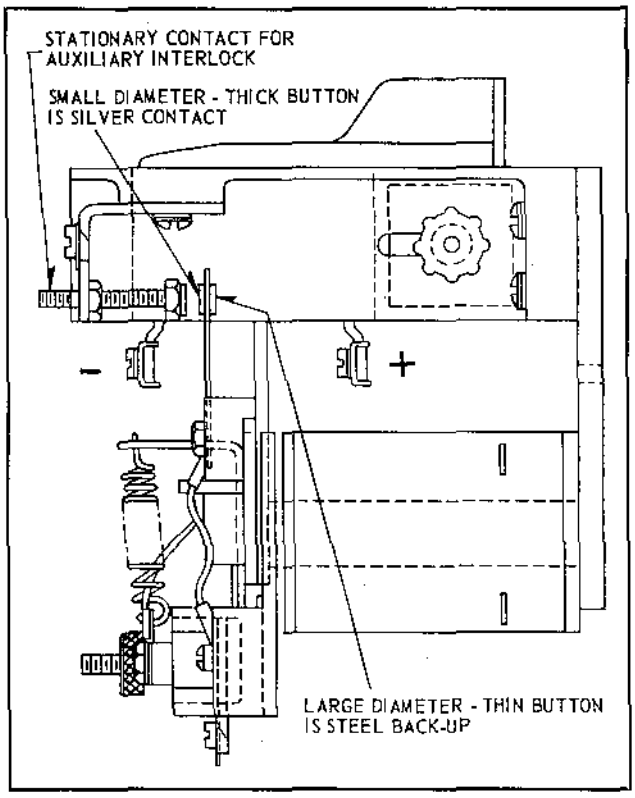

FIG. 2. Type AV Relay with Stationary Contact Assembled for Normally-Closed Position

ADJUSTMENT

To adjust the relay to pick-up and drop-out at given current or voltage values, proceed as follows:

1. Select the coil or coil combinations which will produce the pick-up and drop-out ampere turn values for the application (see Table No. 3).

2. Consult Table No. 2 to determine the armature gap and contact travel values.

3. Loosen the screw securing the armature bearing retaining plate and place armature bearing plate in the annular grooves in the bearing pins at the selected armature gap. Tighten the retaining plate screw.

4. Holding the armature in the closed position, adjust the arc box so that the armature plate is parallel to the pole faces. Tighten the arc box retaining nut with the fingers; do not use tools to tighten this nut.

5. Loosen the front contact retaining nut and adjust the front contact to obtain the contact travel desired. Use of a gauge, inserted from the under side of the arc box between the contacts, expedites this adjustment. Tighten the contact retaining nut.

6. Electrically operate the relay and adjust the operating spring adjustment screw accordingly.

7. Check to see that the moving contact is centrally located in and does not rub against the sides of the arc box.

MAINTENANCE

1. Failure of the armature to close may be caused by an open coil circuit, a power failure, mechanical interference or improper adjustment of the relay for the operating ampere turns applied to the coils. The operating spring specified must be used with this relay.

2. The one-piece molded arc box may be readily removed for inspection or servicing by removing the two screws at the top center of the arc box. The arc box may be lifted vertically from between the two molded supports. It may be advisable to

Table No. 2. OPERATING CHARACTERISTICS

ARMATURE GAP	CONTACT GAP (Inches)										ADJUSTING SCREW TURNS*
	1/16		1/8		3/16		1/4		5/16		
	Pick-up Ampere Turns	Drop-out Ampere Turns	Pick-up Ampere Turns	Drop-out Ampere Turns	Pick-up Ampere Turns	Drop-out Ampere Turns	Pick-up Ampere Turns	Drop-out Ampere Turns	Pick-up Ampere Turns	Drop-out Ampere Turns	
1/16	150-380	100-275	150-450	100-275	150-500	100-275	160-550	100-275	170-600	100-275	0-35
3/16	225-725	200-640	250-800	200-640	260-825	200-640	270-880	200-640	280-920	200-640	0-30
5/16	340-1000	300-900	350-1070	300-900	360-1100	300-900	370-1150	300-900	370-1220	300-900	0-26
7/16	550-1380	520-1250	560-1450	520-1250	570-1550	520-1250	580-1650	520-1250	600-1750	520-1250	0-20
9/16	660-1800	600-1600	670-1900	600-1600	680-2000	600-1600	690-2200	600-1600	710-2400	600-1600	0-17

* Adjusting nut is flush with end of screw at 0-turns (zero) setting.

loosen the arc box adjusting nut before proceeding as above.

3. The main contact may be replaced by first unhooking the operating spring from the bearing bracket. Remove the two binding head screws in the center of the armature plate. This frees the main contact. Reassemble the new main contact making sure the upper end is centrally located in the arc box before final tightening of the screws.

OPERATING COILS

A wide variety of shunt and series coils are available for the relay. Selection of coils is entirely dependent upon the application of the relay. (See Table No. 3).

Coil Replacement. In order to replace the coils, remove the two pole face mounting screws by inserting a screwdriver through the two holes provided in the armature plate. This permits removal of the pole face, bearings, armature, and moving contact assembly as a unit, without affecting any of the adjustments.

Remove and replace the coils; then reassemble the armature unit, making sure that the pole face screws are securely tightened. Check to see that the moving contact is centrally located in and does not rub against the sides of the arc box.

Table No. 3. OPERATING COILS

WIRE WOUND COILS		
Style Number	Coil Turns	Continuous Rating
1419 532	46,500	310 Volts
1419 531	37,000	230 Volts
1419 530	24,100	150 Volts
1745 841	19,700	125 Volts
1745 842	9,760	62.5 Volts
1754 306	7,850	50 Volts
1754 307	6,260	40 Volts
1754 300	2,500	.72 Amps.
1754 301	2,000	.90 Amps.
1745 843	1,600	1.14 Amps.
1754 302	1,250	1.44 Amps.
1754 303	1,150	1.56 Amps.
1745 844	860	2.10 Amps.
1745 823	720	2.50 Amps.
1745 824	650	2.70 Amps.
1745 845	540	3.30 Amps.
1745 825	480	3.80 Amps.
1745 846	390	4.50 Amps.
1745 826	308	5.70 Amps.
1745 847	280	6.30 Amps.
1745 827	210	8.70 Amps.
1745 848	176	10.20 Amps.
1745 828	140	12.90 Amps.
1745 849	112	16.20 Amps.
1745 829	100	18.00 Amps.
1745 830	88	21.00 Amps.
1745 850	66	27.00 Amps.

STRAP WOUND COILS			
Style Number	Coil Turns	Reference to Note	Continuous Rating
1745 831	56	③	26 Amps.
1745 832	36	③	41 Amps.
1745 833	30	③	49 Amps.
1745 834	26	③	58 Amps.
1745 835	20	③	78 Amps.
1600 861	18	③	90 Amps.
1600 860	14	③	107 Amps.
1600 859	12	③	125 Amps.
1600 858	10	③	150 Amps.
1600 857	8	③	188 Amps.
1600 856	6	③	250 Amps.
1600 855	5	③	300 Amps.
1600 854	4	③	375 Amps.
1600 853	3	②	500 Amps.
1600 852	2	②	750 Amps.
1600 850	1	③	375 Amps.
1600 851	1	②	750 Amps.
1745 035	1	①	1,000 Amps.

NOTE: Two studs are required for the above strap wound coils.

①S# 1170 460 Reg. 2

②S# 1600 867 Reg. 1
S# 1600 868 Reg. 1

③S# 1600 870 Reg. 1
S# 1600 871 Reg. 1

WESTINGHOUSE CANADA LIMITED
HAMILTON, CANADA

Printed in Canada

5 KV SWITCHGEAR
CUSTOMER: NEWFOUNDLAND LIGHT & POWER.

SECTION 501

SO #61-00-5-5947

POWER SCHEMATIC W5239 D 6243

CONTROL SCHEMATIC W5239 C 6244 & W5239 C 6245

CIRCUIT BKR W/DIAG W5239 B 5752
SINGLE LINE DRAWG. W5239 C 6246
PT DRAWER W/DIAG W5239 B 2580 REF: 'B'
TEST CABINET W/DIAG W5239 —
PANEL LAYOUT & G.A. W5380 D 0144
DESCRIPTION OF CLOSING CCT W5239 A 2762

CELL 1 W/DIAG W5239 D 6285
CELL 2, 4, 5 W/DIAG. W5239 D 6286
CELL 3 W/DIAG. W5237 C 6287
CELL 6 W/DIAG. W 5239 C 6288

1

FPE JOB NO./CONTRAT NO. 61-00-5-5947

MAT.
FIN.
SCALE/ELLE
DRAWN/DESS. B.O.S. DATE MAY-3-78
CHECKED/CONTROLE DATE
APP. AE DATE

TOL. UNLESS OTHERWISE SPECIFIED.
TOL. SI NON SPECIFIEES

TITLE/TITRE
DRAWING LIST

DWG. NO./DESSIN NO. W5239A 6243
REV. 1
SHEET 1 OF 3

FEDERAL PIONEER
LOCATION OF ORIGIN / L'ENDROIT D'ORIGINE WINNIPEG

REPRODUCIBLES AT

E	G	Q	T	M	O	W
B	S	A	V	N	D	

5KV SWITCHGEAR
CUSTOMER: NEWFOUNDLAND LIGHT & POWER.

SECTION 501

WIRING TO BE N°14 TBS EXCEPT WHERE NOTED

TERMINAL BLOCKS TO BE C.G.E. STUD. EXCEPT WHERE NOTED
C/TS - BUCHANAN SHORT CIRCUITING T/B's

FUSE HOLDERS :- SMITH & STONE 250V 30A.
FUSES :- C15HG, C30HG ENGLISH ELECTRIC.
WIRE MARKERS :- BRADY MARKER BOTH ENDS

FPE JOB NO./CONTRAT NO.
61-00-5-5947

MAT.	TITLE/TITRE: WIRING DEVICES & NOTES	DWG. NO./DESSIN NO.: W5239A6243	REV.: 0
FIN.	TOL. UNLESS OTHERWISE SPECIFIED.	SHEET 2 OF 3	
SCALE/ECHELLE: NTS	TOL. SI NON SPECIFEES		
DRAWN/DESS.: B.O.S. DATE: 14/3/78			
CHECKED/CONTROLE: DATE			
APP.: DATE			

FEDERAL PIONEER
LOCATION OF ORIGIN / L'ENDROIT D'ORIGINE: WPG

REPRODUCIBLES AT

E	G	Q	T	M	C	W
B	S	A	V	N	D	

CELL N°	1	2	3	4	5	6
SERIAL N°	61-00-5594T-1	61-00-5594T-2	61-00-5594T-3	61-00-5594T-4	61-00-5594T-5	61-00-5594T-6
C/B SERIAL N°	———	61-00-5594T-C1-1	61-00-5594T-C1-2	61-00-5594T-C1-3	61-00-5594T-C1-4	———

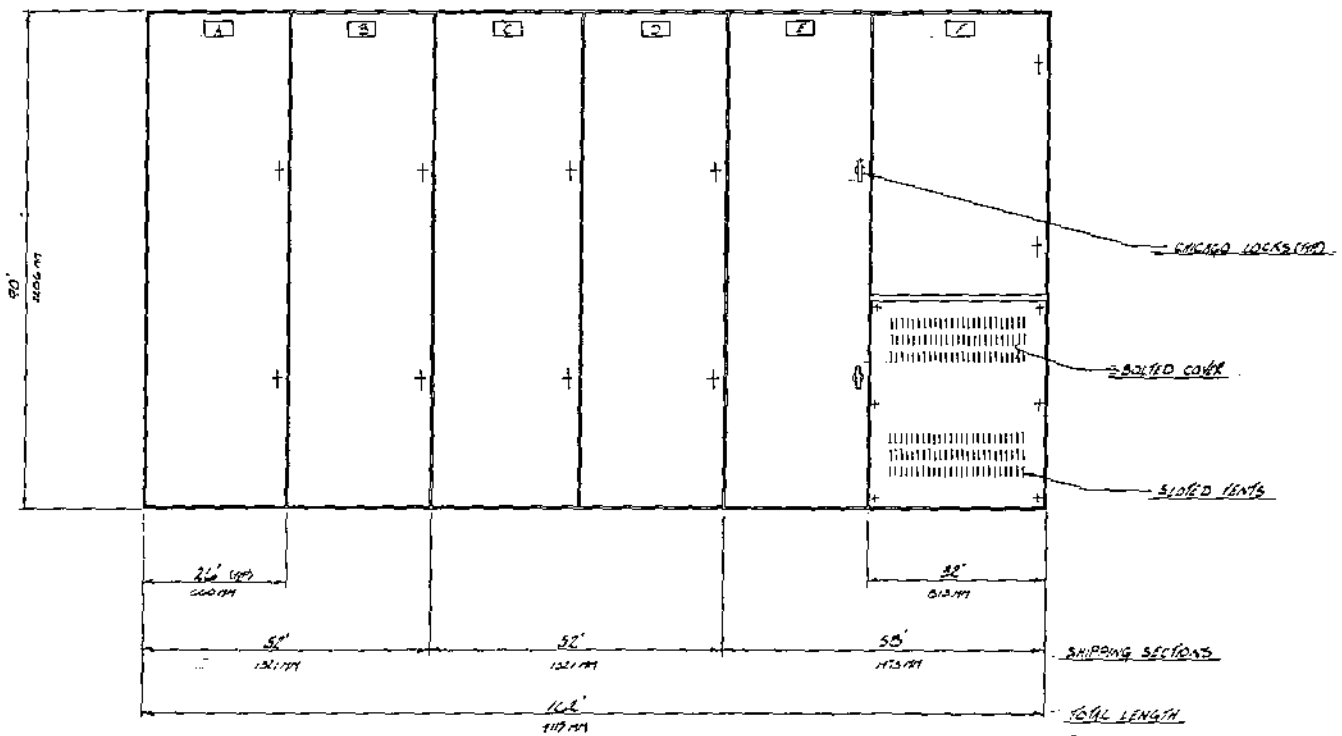

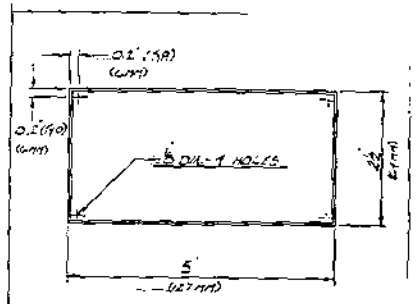

MAT'L - 3/32 THICK LAMICOID
LETTERS - 1/2 HIGH
NOTE - WHITE LETTERS ON BLACK BACKGROUND

REF.	INSCRIPTION	QTY.
A	FIELD BREAKERS	1
B	GENERATOR #3 BREAKER	1
C	TRANSFORMER #1 BREAKER	1
D	GENERATOR #2 BREAKER	1
E	GENERATOR #1 BREAKER	1
F	STATION SERVICE	1

FEDERAL PIONEER LIMITED
GRANBY - TORONTO - WINNIPEG - REGINA - RED DEER
CERTIFIED PRINT FOR
NEWFOUNDLAND LIGHT & POWER CO.
CUSTOMER'S
S.O. 61-00-5594T ORDER 66760
BY DATE MAY 12/70

NEWFOUNDLAND LIGHT & POWER CO. LTD.
NEWFOUNDLAND LIGHT & POWER CO. LTD. 66760
61-00-5594T
FRONT ELEVATION
W5350 C144
SHT 1 OF 2
FEDERAL PIONEER

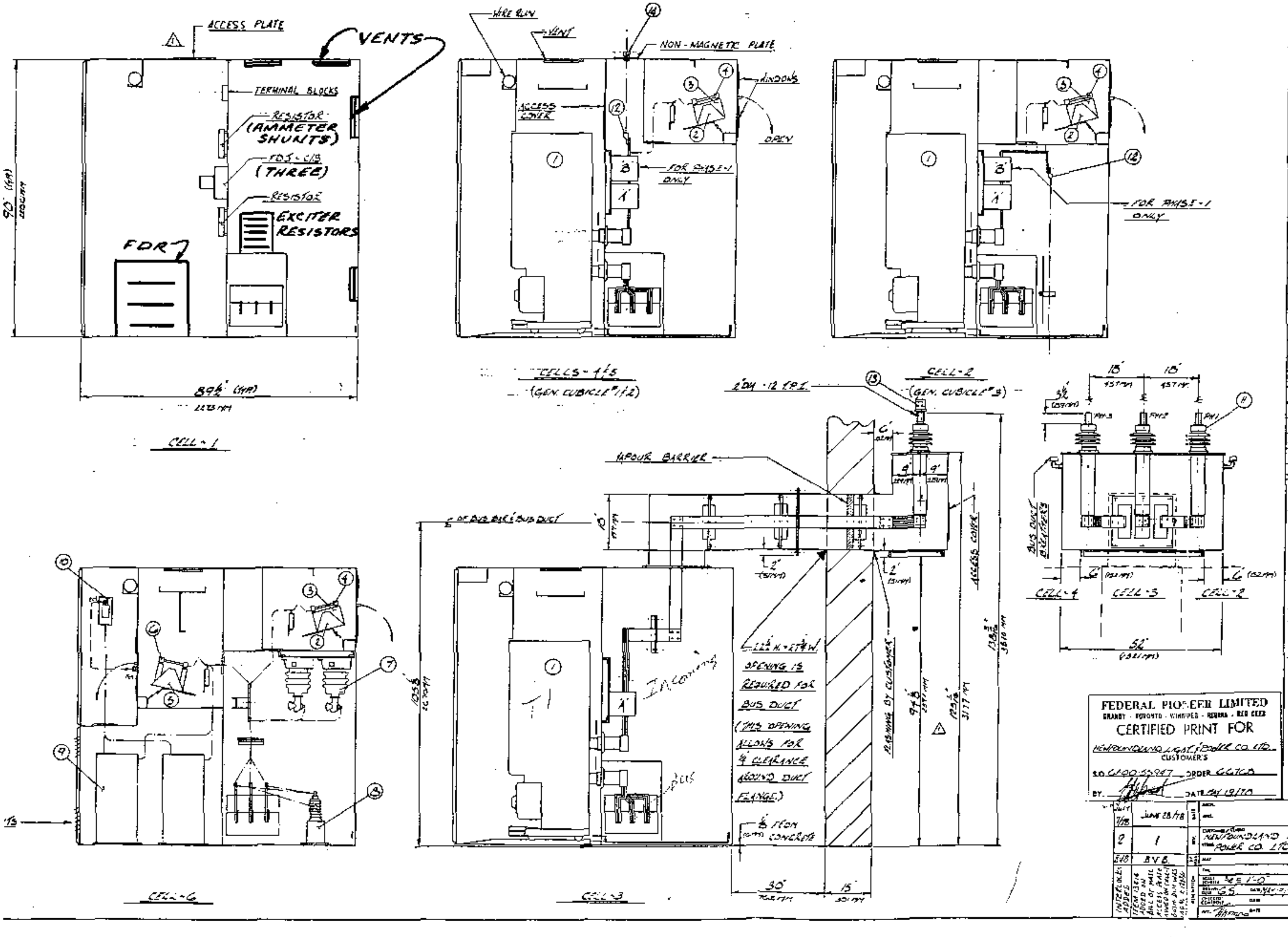

INTERLOCK SCHEDULE

INTERLOCK	TYPE	POSITION	LOCK No.	QTY.
K-1	VF	LV BREAKER	C-241BP	1
K-1	VF	FUSE DRAWER	C-241BP	1

BILL OF MATERIAL

REF.	DESCRIPTION	QTY.
13	STUD CONNECTOR TYPE FDGBTR-3-3	3
14	CABLE CONNECTOR T&B CAT.# 10469	6

BILL OF MATERIAL

REF.	DESCRIPTION
1	C/B - DST-2 5KV/250MVA/2000A.
2	FPE - PT CRADLE
3	FPE - PT 2400-120V
4	CGE - FSI-B FUSE 4.8KV 1E
5	FPE - FUSE CRADLE
6	CGE - ESI-D FUSE 2.4KV 10E
7	WHSE - LIGHTNING ARRESTER 2PL 3KV.
8	WHSE - SURGE CAPACITOR 3 PH.
9	HAMMOND - TRANSFORMER 1-PH. 37.5KVA
10	FPE - NES - 3 POLE 200A MCCB
11	C.O.S. - BUSHING K-3 2000A. 8.7KV.
12	BURNDY - CABLE LUG - NA 39-2N

CIRCUIT BREAKER

SPRING CHARGING MOTOR	125 V[illegible]
SPRING RELEASE COIL	125 V[illegible]
SHUNT TRIP COIL	125 V[illegible]

ADDITIONAL EQUIPMENT

RACKING HANDLE - 1	FPE - C/T - 1500 - 5[illegible]
WINDING HANDLE - 2	SHIPPED LOOSE
SLOW CLOSE LEVER - 1	

ESTIMATED WEIGHTS

CELL - 1	[illegible]
CELL - 2, 4 & 5 W/O C/B @ 1200 lbs. EACH	[illegible]
CELL - 3 W/O C/B @ 1500 lbs. EACH	[illegible]
CELL - 6	[illegible]
BUS - DUCT	[illegible]
TOTAL	[illegible]

PAINT

INTERIOR - ASA 61 GREY
EXTERIOR - ASA 61 GREY

CURRENT TRANSFORMER

CELL No.	POSITION	RATIO	ACCURACY	PRIMARY
2, 4 & 5	'A'	600-5A	2.5 L 200	½ x 2½ CU. BA[illegible]
3	'A'	1500-5A	2.5 L 200	2-¾ x 2½ CU. B[illegible]
2, 4 & 5	'B'	600-5A	2.5 L 200	½ x 2½ CU. BA[illegible]

NOTES -

1) MAIN BUS EPOXY INSULATED - ½ x 4 CU. BAR - 2
2) RISERS EPOXY INSULATED: 2 - ¾ x 3 CU. BARS - [illegible]
3) GROUND BUS ¼ x 2 CU. BAR, BOLTED TO BOSSES, - TO FRAME THROUGHOUT SW/GR.
4) INSULATED BARRIERS BETWEEN CUBICLES - OF CAST EPOXY.
5) UNIT WILL BE NUMBERED FROM LEFT TO RIGHT.
6) UNIT WILL BE EXTENDABLE AT BOTH ENDS.

CONSTRUCTION -

1) ALL PANELS, COVERS & DOORS TO BE 11GA. M[illegible]
2) SW/GR. IS BUILT TO METALCLAD DESIGN AS C.E.M.A. SPEC.
3) ALL CABLE TERMINATIONS TO BE EPOXIED ON - MAT'L SUPPLIED BY FPE.

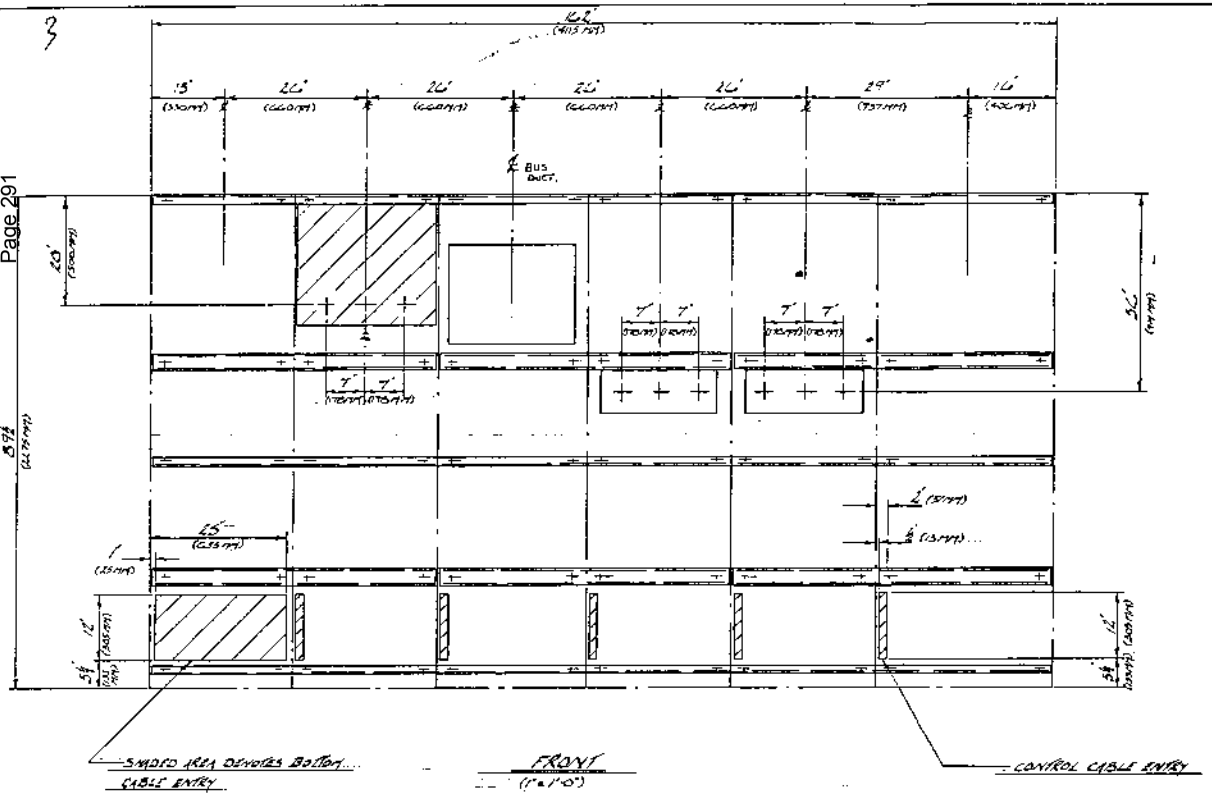

FRONT
(1" = 1'-0")

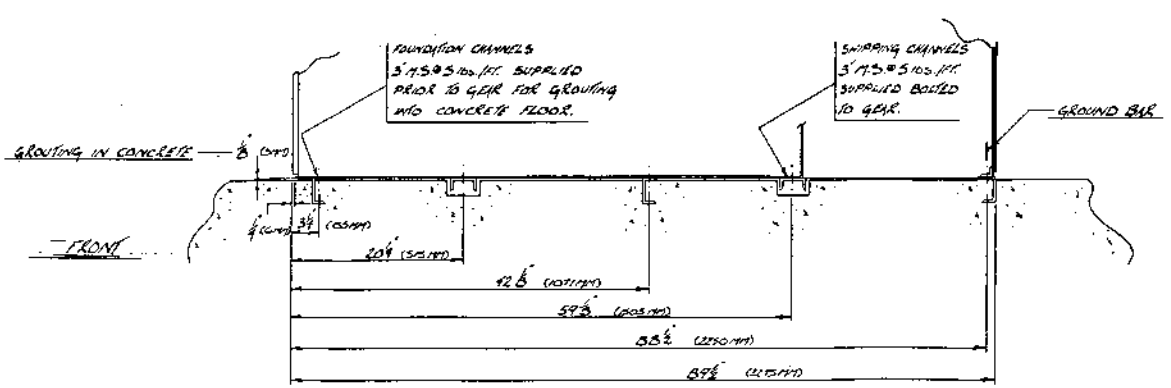

SECTION A-A
(⅛" SCALE)

FEDERAL PIONEER LIMITED
ORANGE - TORONTO - WINNIPEG - REGINA - RED DEER
CERTIFIED PRINT FOR
NEWFOUNDLAND LIGHT & POWER CO. LTD.
CUSTOMER'S
S.O. 61-00-55947 ORDER 66768
BY [signature] DATE MAY 23/78

CUSTOMER / CLIENT: NEWFOUNDLAND LIGHT & POWER CO. LTD.	DESIGN NO. / COMMANDS NO.: 66768	CONTRACTOR / CONTRACTOR: NEWFOUNDLAND LIGHT & POWER CO. LTD.
		APP. FOR NO. / CONTRACT NO.: 61-00-55947
TITLE / TITLE: FLOOR PLAN		DWG. NO. / DRAWN NO.: H5330-0144 SHT. 3 OF 3

FEDERAL PIONEER
LIMITED OF OTTAWA
A CONSTRUCTION STATEMENT

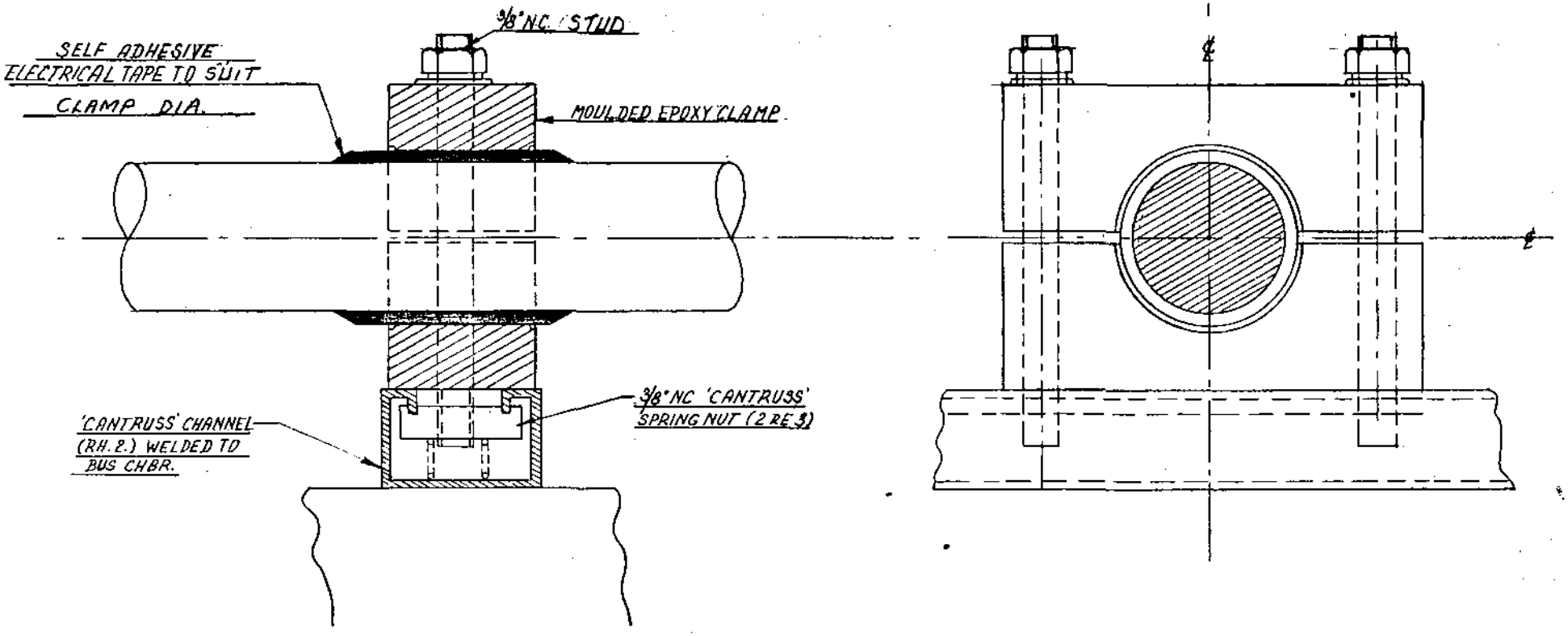

REPRODUCIBLES LOCATED AT PLANTS							
A-	B-	G-	M-	S-	T-	V-	W-

REVISIONS

TYPICAL CABLE CLAMP ARRANGEMENT

DR. BY H.P.	DATE 1.9.71	SCALE FULL	DRG.
APP. BY	DATE	CHECKED	ISSUED

P/E **PIONEER ELECTRIC LIMITED**
TORONTO - WINNIPEG - REGINA - RED DEER

DRAWING NO. W 5201 B - 0457

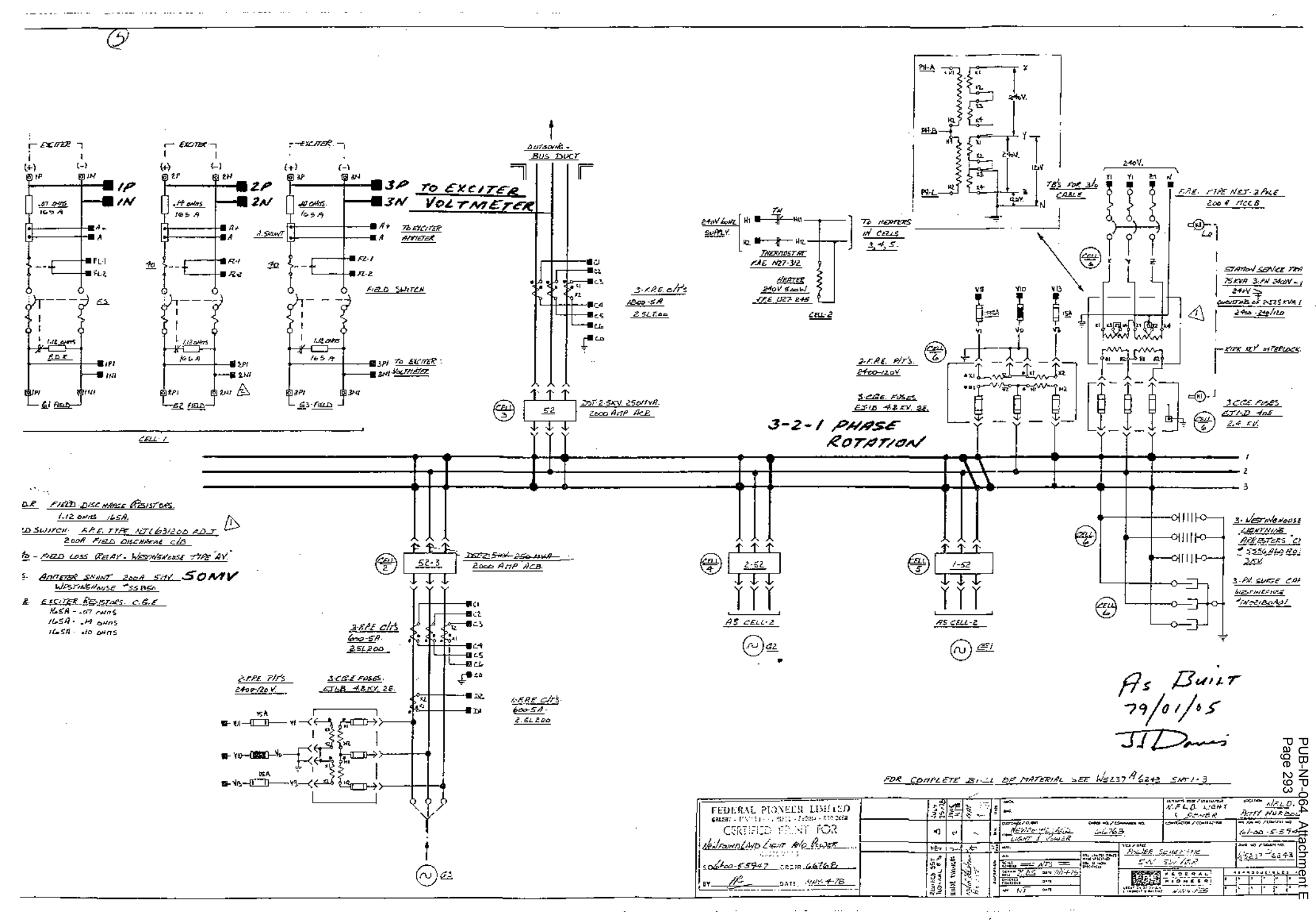

PUB-NP-064 Attachment E
Page 293

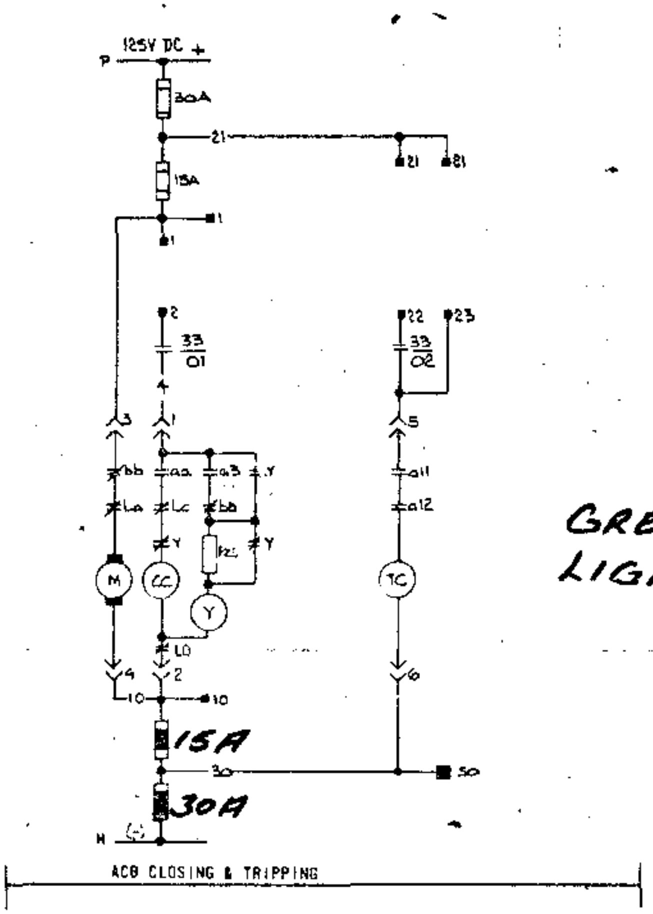

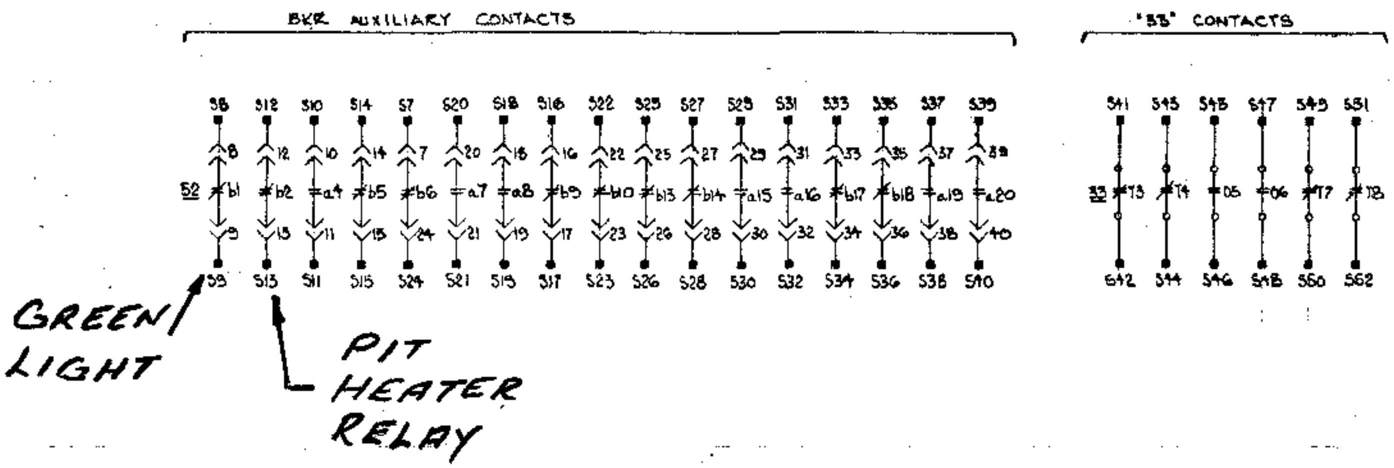

DEVICE	DESCRIPTION	
a	BKR. AUX. SWITCH – CLOSES WHEN BKR. CLOSES	
b	BKR. AUX. SWITCH – CLOSES WHEN BKR. OPENS	
aa	LIMIT SW. – CLOSES WHEN SPRINGS BECOME FULLY CHARGED	
bb	LIMIT SW. – CLOSES WHEN SPRINGS BECOME FULLY DISCHARGED	
Lc	LATCH – CHECK SWITCH	
Lo	LOCKOUT SW. – OPENS WHEN INTERLOCK PEDAL IS DEPRESSED – HAND RESET	
M	SPRING CHARGE MOTOR	125 V DC
CC	CLOSING SPRING RELEASE COIL	
Y	ANTIPUMPING RELAY	
TC	SHUNT TRIP COIL	
33/O	CONTACT CLOSED WHEN BKR IS IN SERVICE POSITION	
33/T	CONTACT CLOSED WHEN BKR IS IN TEST OR WITHDRAWN POSITION	

As Built
79/01/05

FOR COMPLETE BILL OF MATERIAL SEE DWG W5239A6243 SHT-1 TO 3

FOR DESCRIPTION OF CLOSING CIRCUIT SEE W5239-A-2782

FEDERAL PIONEER LIMITED
GRANBY · TORONTO · WINNIPEG · REGINA · REDWOOD
CERTIFIED PRINT FOR
N.L.A.P.
CUSTOMER'S
S.O. 61.00.5 5947 C.O. 66768
BY [signature] DATE MAY-4-78

ULTIMATE USER: NEWFOUNDLAND LIGHT AND POWER
LOCATION: PETTY HARBOUR
ORDER NO.: 66768
JOB NO.: 61.00.5-5947
TITLE: CIRCUIT BREAKER CONTROL SCHEMATIC 6.9KV SWITCHGEAR
DWG. NO.: W 5239-C 6244
REV. 1
SCALE: NTS
DRAWN: BOS DATE: MAY-4-78
APP.: NJ
FEDERAL PIONEER
WPG

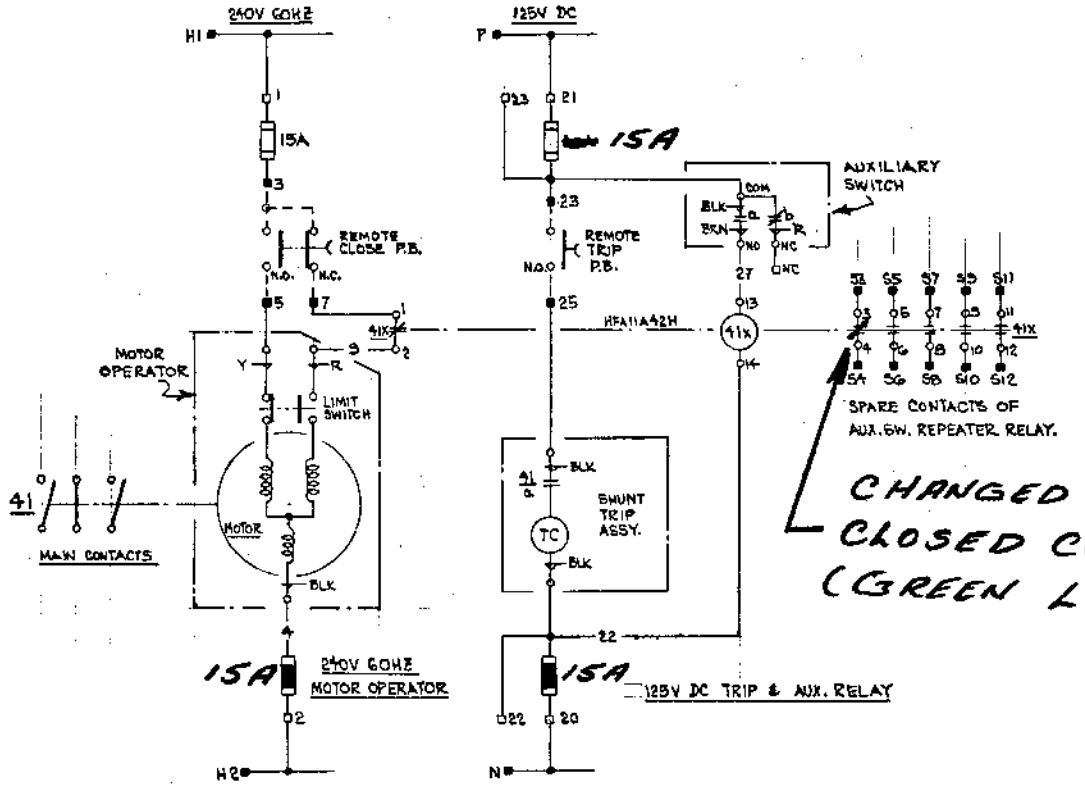

CHANGED TO NORMALLY CLOSED CONTACT (GREEN LIGHT INDICATION)

-O TERMINAL BLOCKS FOR INTERNAL CONNECTION
-■ TERMINAL BLOCKS FOR OUTGOING CONNECTION (PREFIX 1- FOR G1, 2- FOR G2, 3- FOR G3)

41: FIELD CIRCUIT BKR FPE TYPE NJL36120OFDJ

CONTROL SCHEMATIC FOR FIELD CIRCUIT BKR - SHOWN WITH BKR "OPEN".
(TYPICAL FOR TOTAL OF 3 SUPPLIED)

As Built
79/01/05
JJ Davis

NOTE:
FOR COMPLETE BILL OF MATERIAL SEE W5239A6243 SH.1 - 3.

FEDERAL PIONEER LIMITED
CERTIFIED PRINT FOR
NLAP
CUSTOMER'S
S.O. 61.00.55947 ORDER 66768
BY [signature] DATE AUG 23-78

AUG 23-78 | 3 | NJ | RE-DRAWN & UPDATED

ULTIMATE USER / UTILISATEUR: NLAP
LOCATION: PETTY HARBOUR
FPE JOB NO. / CONTRAT NO.: 61.00.55947
TITLE / TITRE: FIELD C/B CONTROL SCHEMATIC
DWG. NO. / DESSIN NO.: W5239C6245
REV.: 3
DRAWN DESS.: NJ DATE: AUG 23 78
FEDERAL PIONEER
WPG

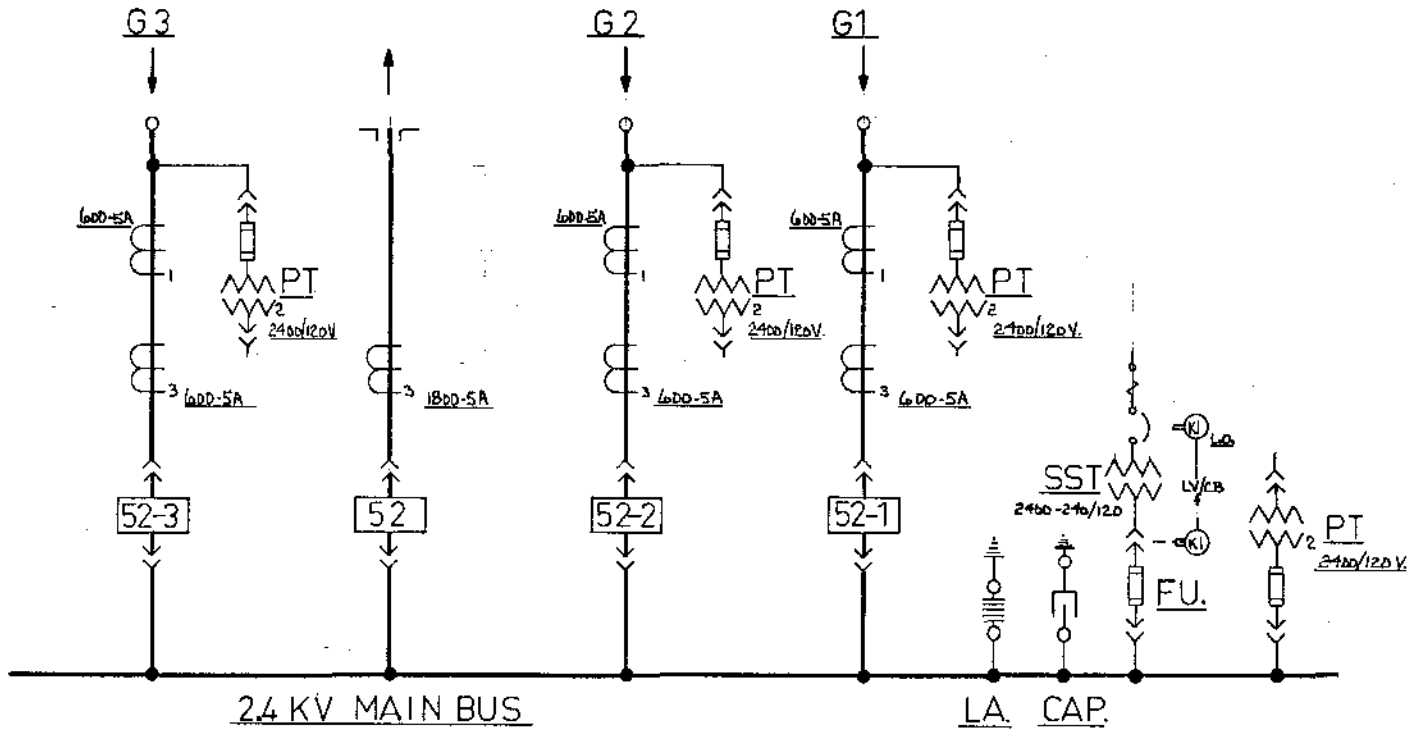

RATING: 5KV 250 MVA 2000A

ACCESS REQUIRED FRONT AND REAR

INTERLOCKING: FUSE DRAWER TO LV/CB.

L.O. DENOTES LOCKED OPEN

LC. DENOTES LOCKED CLOSED

FPE REF: 61-00-5 5947

PETTY HARBOUR

FEDERAL PIONEER LIMITED
BRAMBY - TORONTO - WINNIPEG - REGINA - RED DEER
CERTIFIED PRINT FOR
NEWFOUNDLAND LIGHT & POWER
CUSTOMER'S
S.O. 61-00-5-5947 ORDER 66768
BY [signature] DATE MAY-5-78

ADDED KAMO ON SST

ARCH. / ENG. / CUSTOMER / CLIENT / ORDER NO. / COMMANDE NO. 66768
ULTIMATE USER / UTILISATEUR: NEWFOUNDLAND LIGHT & POWER
LOCATION: PETTY HARBOUR
CONTRACTOR / CONTRACTEUR
FPE JOB NO. / CONTRAT NO. 61-00-5-5947
MAT.
TITLE / TITRE: SINGLE LINE DIAGRAM.
DWG. NO. / DESSIN NO. W5237 C 6246
REV. 1
SCALE / ECHELLE: NTS.
DRAWN / DESS. K.D.S. DATE MAY-5-78
CHECKED / CONTROLE DATE
APP. NJ DATE
TOL. UNLESS OTHERWISE SPECIFIED. TOL. SI NON SPECIFIEES
FPE FEDERAL PIONEER
LOCATION OF ORIGIN / L'ENDROIT D'ORIGINE: WINNIPEG
REPRODUCIBLES AT

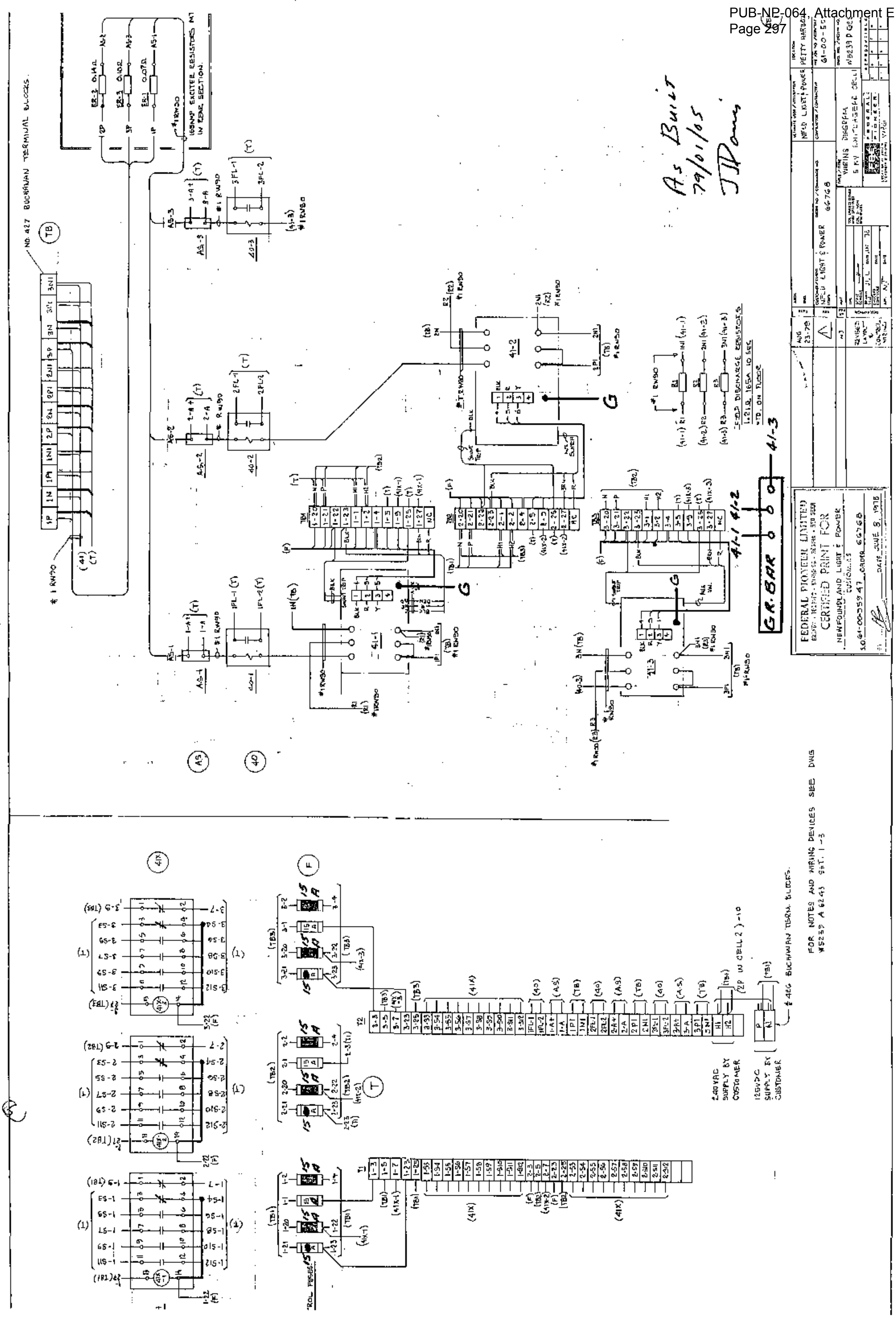
NO. 427 BUCHANAN TERMINAL BLOCKS
As Built 29/01/05
GR. BAR
FEDERAL PIONEER LIMITED
CERTIFIED PRINT FOR
NEWFOUNDLAND LIGHT & POWER
FOR NOTES AND WIRING DEVICES SEE DWG W5239 A 6243 SHT. 1-3
240VAC SUPPLY BY CUSTOMER
125VDC SUPPLY BY CUSTOMER

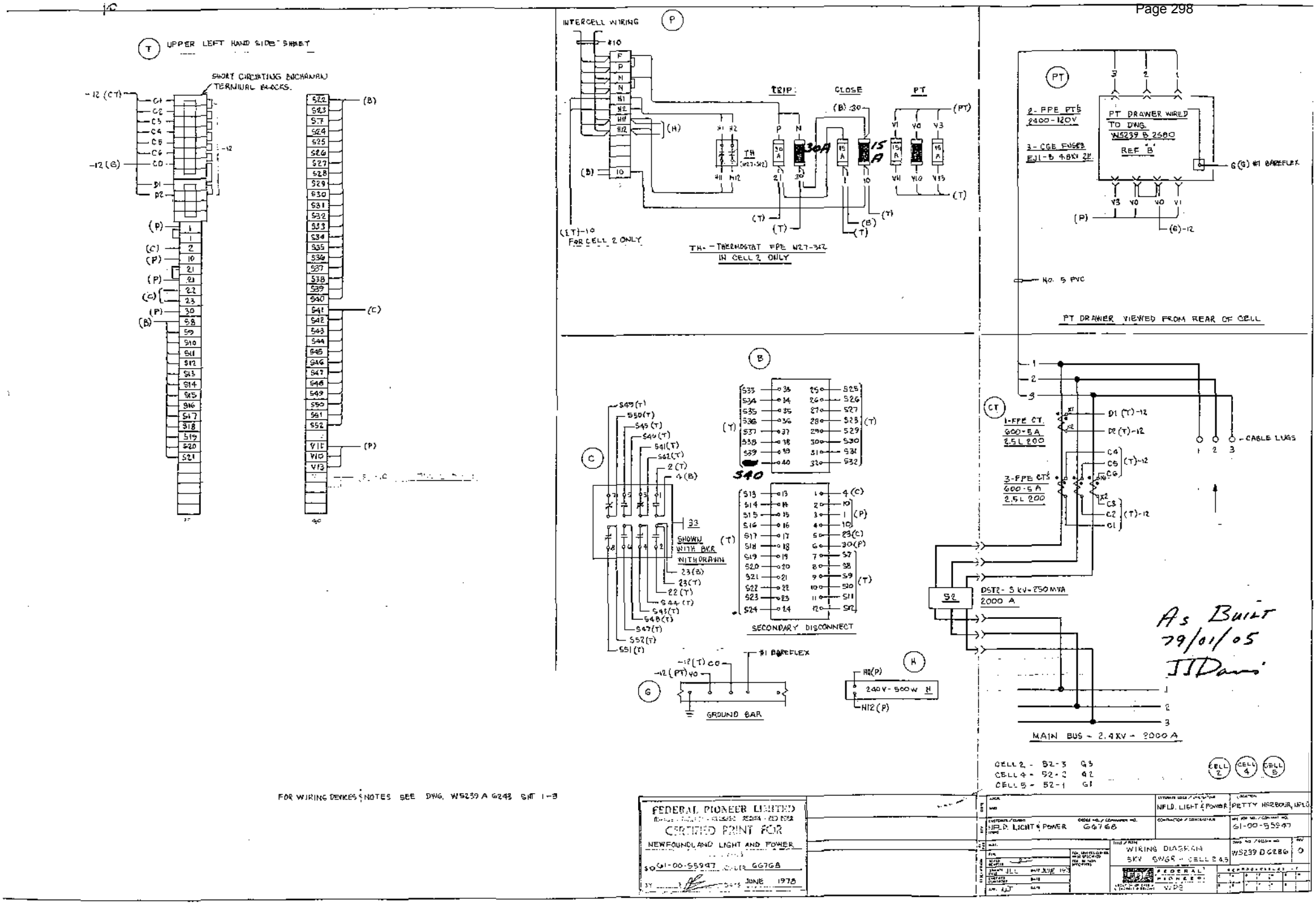
UPPER LEFT HAND SIDE SHEET
SHORT CIRCUITING BUCHANAN TERMINAL BLOCKS.
INTERCELL WIRING
TRIP
CLOSE
PT
TH - THERMOSTAT FPE N27-312 IN CELL 2 ONLY
FOR CELL 2 ONLY
2-FPE PTS 2400-120V
3-CGE FUSES EJ1-B 4.8KV 2E
PT DRAWER WIRED TO DWG. W5239 B 2680 REF "B"
#1 BAREFLEX
NO. 5 PVC
PT DRAWER VIEWED FROM REAR OF CELL
1-FPE CT. 600-5A 2.5L 200
3-FPE CTS 600-5A 2.5L 200
CABLE LUGS
SHOWN WITH BKR WITHDRAWN
SECONDARY DISCONNECT
DST2 - 5 KV - 250 MVA 2000 A
GROUND BAR
240V - 500W
MAIN BUS - 2.4KV - 2000 A
As Built 79/01/05 JJDavis
CELL 2 - 52-3 G3
CELL 4 - 52-2 G2
CELL 5 - 52-1 G1
FOR WIRING DEVICES & NOTES SEE DWG. W5239 A 6243 SHT 1-3
FEDERAL PIONEER LIMITED
CERTIFIED PRINT FOR
NEWFOUNDLAND LIGHT AND POWER
NFLD. LIGHT & POWER
PETTY HARBOUR, NFLD.
WIRING DIAGRAM
5KV SWGR - CELL 2 & 5
W5239 D 6286
JUNE 1978

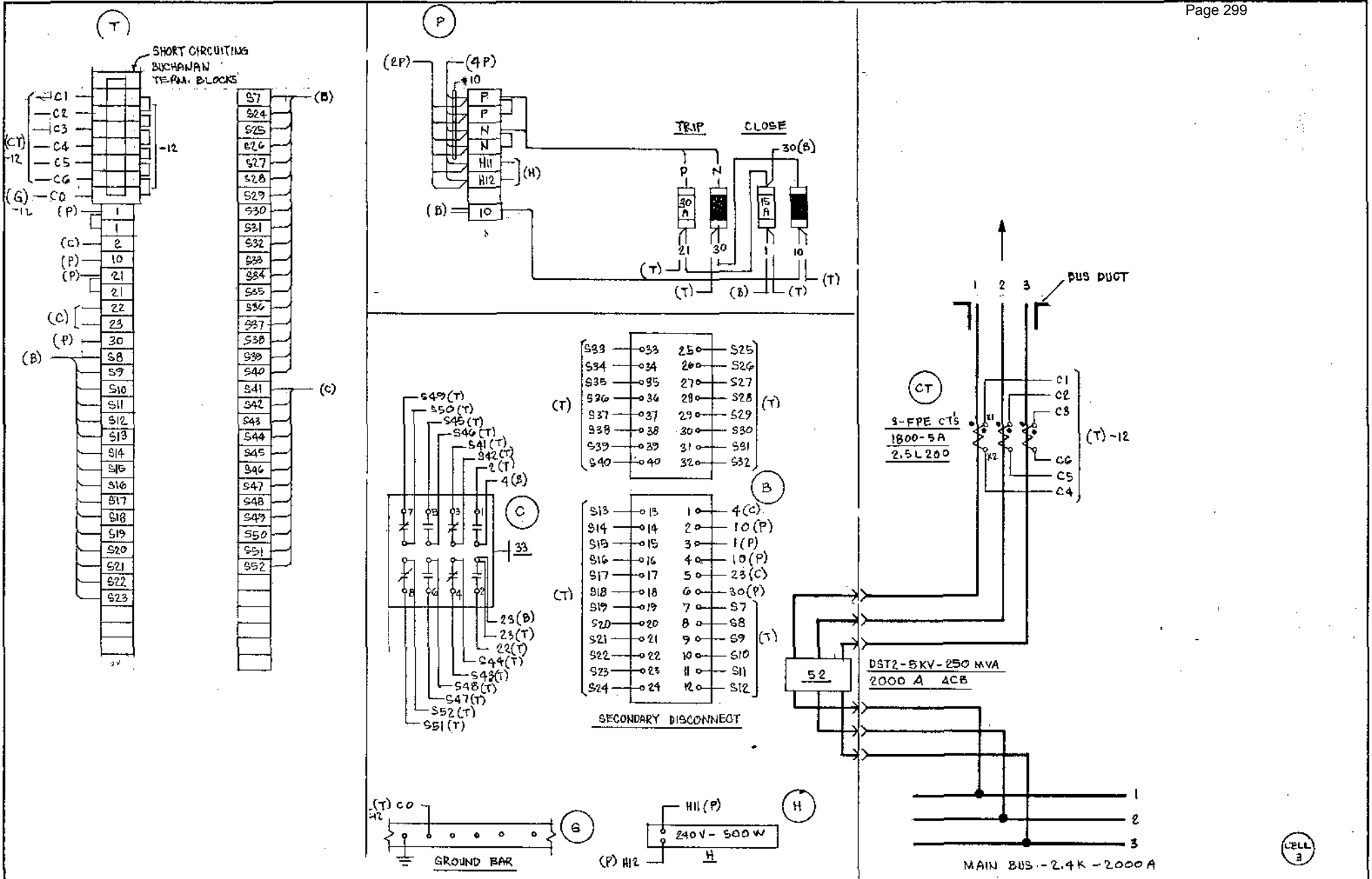

FOR NOTES AND WIRING DEVICES SEE DWG. W5239 A G243 SHT. 1-3

FEDERAL PIONEER LIMITED
BRANDT - TORONTO - WINNIPEG - REGINA - RED DEER
CERTIFIED PRINT FOR
NEWFOUNDLAND LIGHT & POWER
CUSTOMER'S
S.O. 61-00-55947 ORDER 66768
BY _____ DATE JUNE 8, 1978

ULTIMATE USER / UTILISATEUR	NFLD. LIGHT AND POWER
LOCATION	PETTY HARBOUR, NFLD
CUSTOMER / CLIENT	NFLD. LIGHT AND POWER
ORDER NO. / COMMANDE NO.	66768
CONTRACTOR / CONTRACTEUR	
FPE JOB NO. / CONTRAT NO.	61-00-55947
TITLE / TITRE	WIRING DIAGRAM 5 KV SWGR CELL 3
DWG. NO. / DESSIN NO.	W5239 C G287
REV.	0
DRAWN DESS.	JLL DATE JUNE 78
CHECKED CONTROLE	DATE
APP.	DATE
LOCATION OF ORIGIN	FEDERAL PIONEER WINNIPEG

REPRODUCIBLES AT

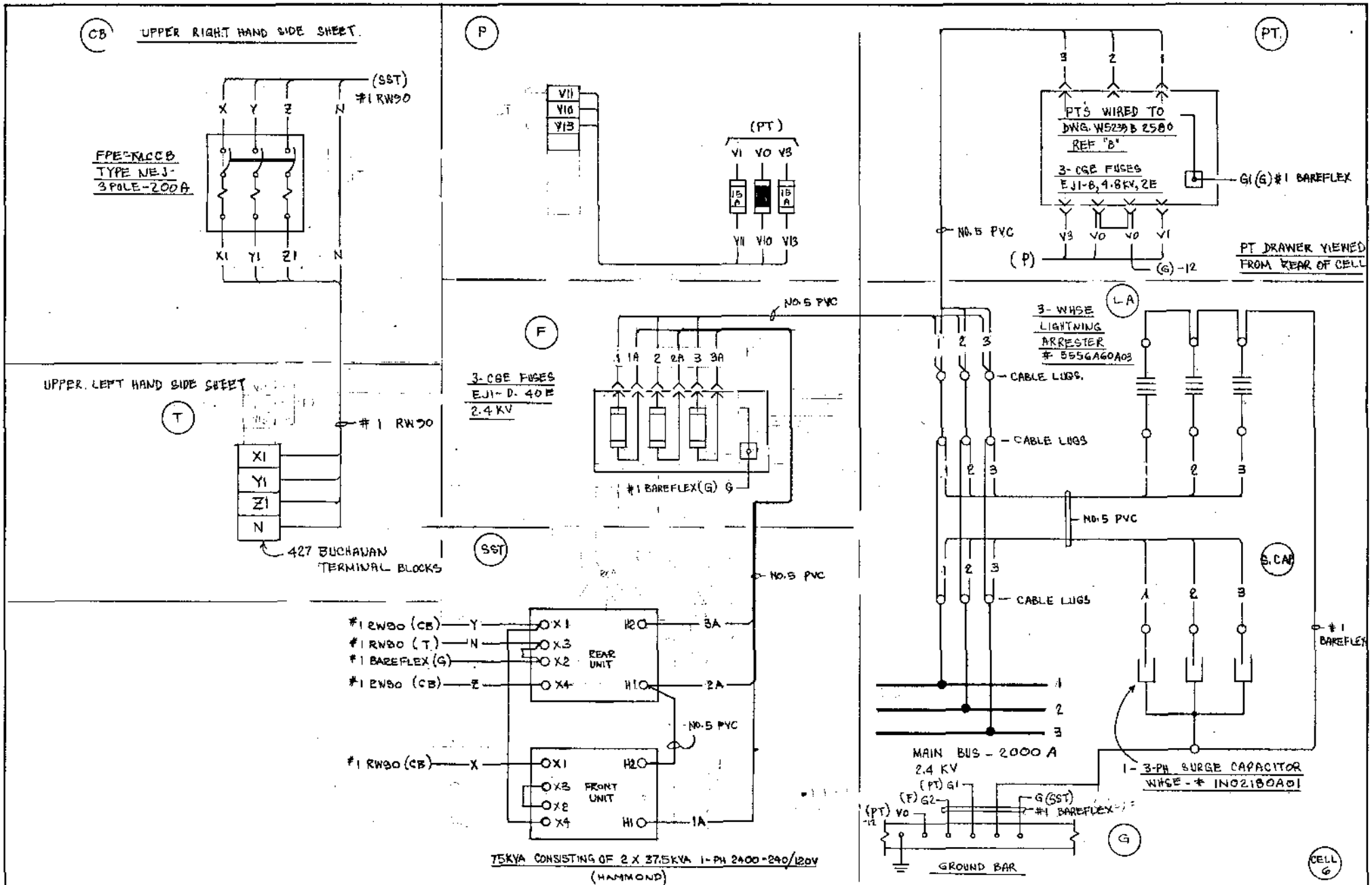

FOR WIRING NOTES AND DEVICE TABLE SEE DWG W5239 A 6243 SHT. 1-3

FEDERAL PIONEER LIMITED
CERTIFIED PRINT FOR
NEWFOUNDLAND LIGHT AND POWER
CUSTOMER'S
S.O. 61-00-55947 ORDER 66768
BY _____ DATE JUNE 1978

REVISED SST TERMINALS — JULY 25/78

ARCH.
ENG.
CUSTOMER / CLIENT: NFLD LIGHT AND POWER
ORDER NO. / COMMANDE NO. 66768
MAT.
FIN.
SCALE / ÉCHELLE
DRAWN / DESS. JLL DATE JUN. 1978
CHECKED / CONTRÔLÉ DATE
APP. DATE
TOL. UNLESS OTHERWISE SPECIFIED / TOL. SI NON SPÉCIFIÉES
ULTIMATE USER / UTILISATEUR: NFLD. LIGHT & POWER
CONTRACTOR / CONTRACTEUR
LOCATION: PETTY HARBOUR, NFLD.
FPE JOB NO. / CONTRAT NO. 61-00-55947
TITLE / TITRE: WIRING DIAGRAM 5 KV SWGR CELL G
DWG. NO. / DESSIN NO. W5239 C 6288
REV. 1
FEDERAL PIONEER
LOCATION OF ORIGIN / L'ENDROIT D'ORIGINE
REPRODUCIBLES AT

PUB-NP-064, Attachment E
Page 300

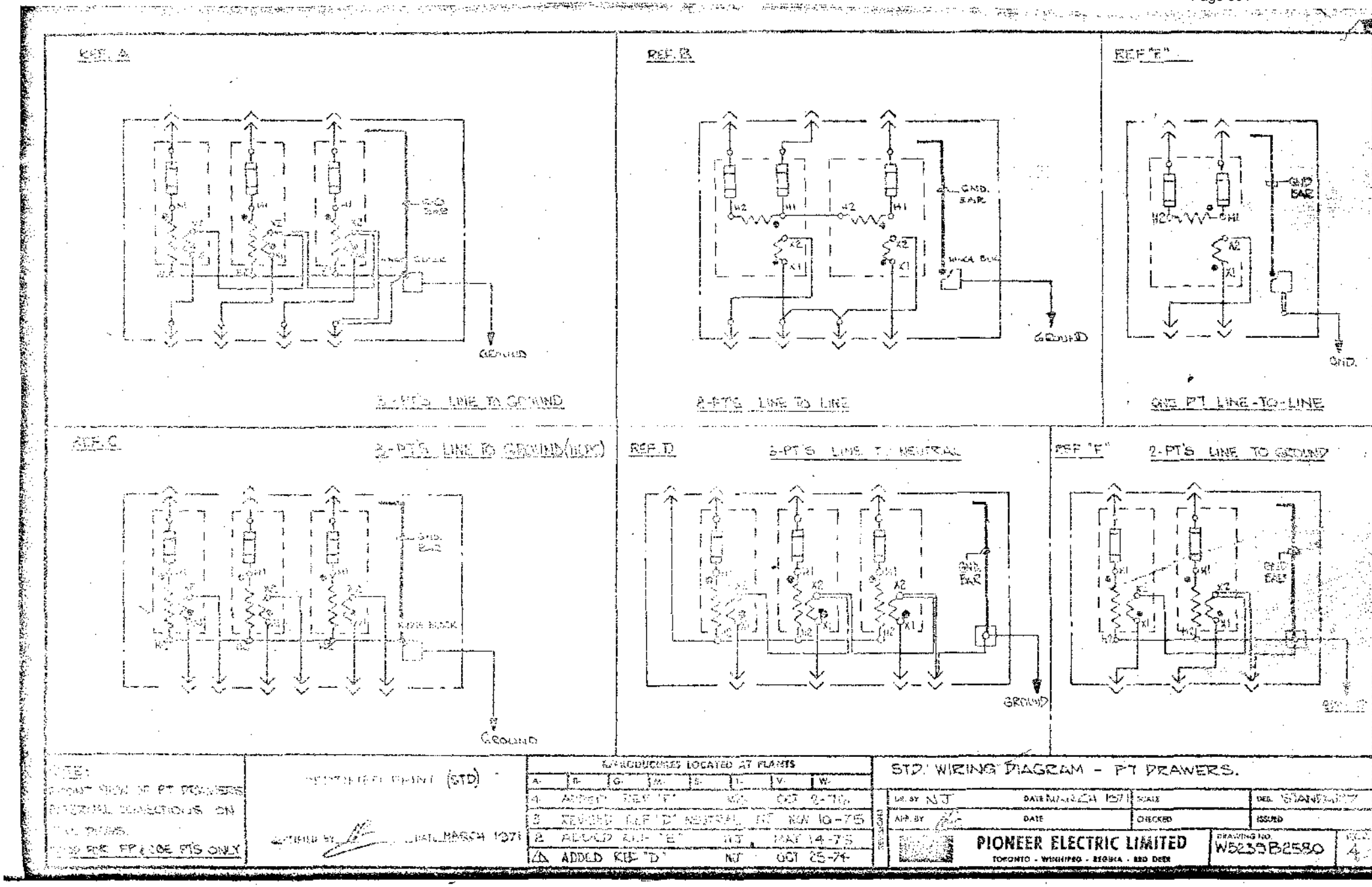
REF. A
3-PT'S LINE TO GROUND
REF. B
GND. BAR
GROUND
2-PT'S LINE TO LINE
REF "E"
GND. BAR
GND.
ONE PT LINE-TO-LINE
REF. C
3-PT'S LINE TO GROUND (HLPC)
GND. BAR
GROUND
REF. D
3-PT'S LINE TO NEUTRAL
GND. BAR
GROUND
REF "F"
2-PT'S LINE TO GROUND
GND. BAR
NOTE:
FOR FP & CBE PTS ONLY
(STD)
DATE MARCH 1971
REPRODUCIBLES LOCATED AT PLANTS
4 ADDED REF "F" NJ OCT 2-76
3 REVISED REF "D" NEUTRAL NJ NOV 10-75
2 ADDED REF "E" NJ MAY 14-75
1 ADDED REF "D" NJ OCT 25-74
STD. WIRING DIAGRAM - PT DRAWERS.
DR. BY NJ
DATE MARCH 1971
SCALE
DES. STANDARD
APP. BY
DATE
CHECKED
ISSUED
PIONEER ELECTRIC LIMITED
TORONTO - WINNIPEG - REGINA - RED DEER
DRAWING NO. W5239B2580
REV. 4

DESCRIPTION	BY	REV.	DATE

DESCRIPTION OF CLOSING CIRCUIT

1. When power is switched on, the spring-charge motor charges the closing springs. When they become fully charged, bb opens and aa closes, preparing the circuit to cc. When close control is activated, cc releases the springs which close the bkr. contact a3 closes with the bkr., picking up Y which seals in through R disconnecting the supply from cc. When the close control contact opens, Y becomes de-energized. Upon spring discharge, bb immediately initiates recharge.

2. Anti-pumping feature; if bkr. trips a reclosure is prevented by the N.C. contact of Y until Y is de-energized by the opening of the close control contact.

3. 'LC' is in the circuit to prevent a closure until the trip mechanism is relatched after trip.

4. 'LO' is part of the interlock system; to move the bkr. from the operating position or from the test position the interlock pedal must be depressed. In so doing the bkr. trips (if it is closed) and the toggle switch LO is opened. This disconnects the closing supply. LO must be reset by hand after bkr. is in position.

ARCH. / ENG.		ULTIMATE USER/UTILISATEUR / LOCATION	
CUSTOMER/CLIENT / ITEMS	ORDER NO./COMMANDE NO.	CONTRACTOR/CONTRACTEUR	FPE JOB NO./CONTRAT NO. STANDARD
MAT.		TITLE/TITRE: DESCRIPTION OF CLOSING CIRCUIT OF DST2 BKRS.	DWG. NO./DESSIN NO.: W 5239-A-2762
FIN.	TOL. UNLESS OTHERWISE SPECIFIED		REV.: 0
CALE/ CHELLE	TOL. SI NON SPECIFEES		
DRAWN DESS. WJ/JMC DATE MAR 74		FEDERAL PIONEER	
CHECKED CONTROLE DATE			
APP. DATE		LOCATION OF ORIGIN L'ENDROIT D'ORIGINE WPG	

REPRODUCIBLES AT

E	G	Q	T	M	O	W
B	S	A	V	N	D	

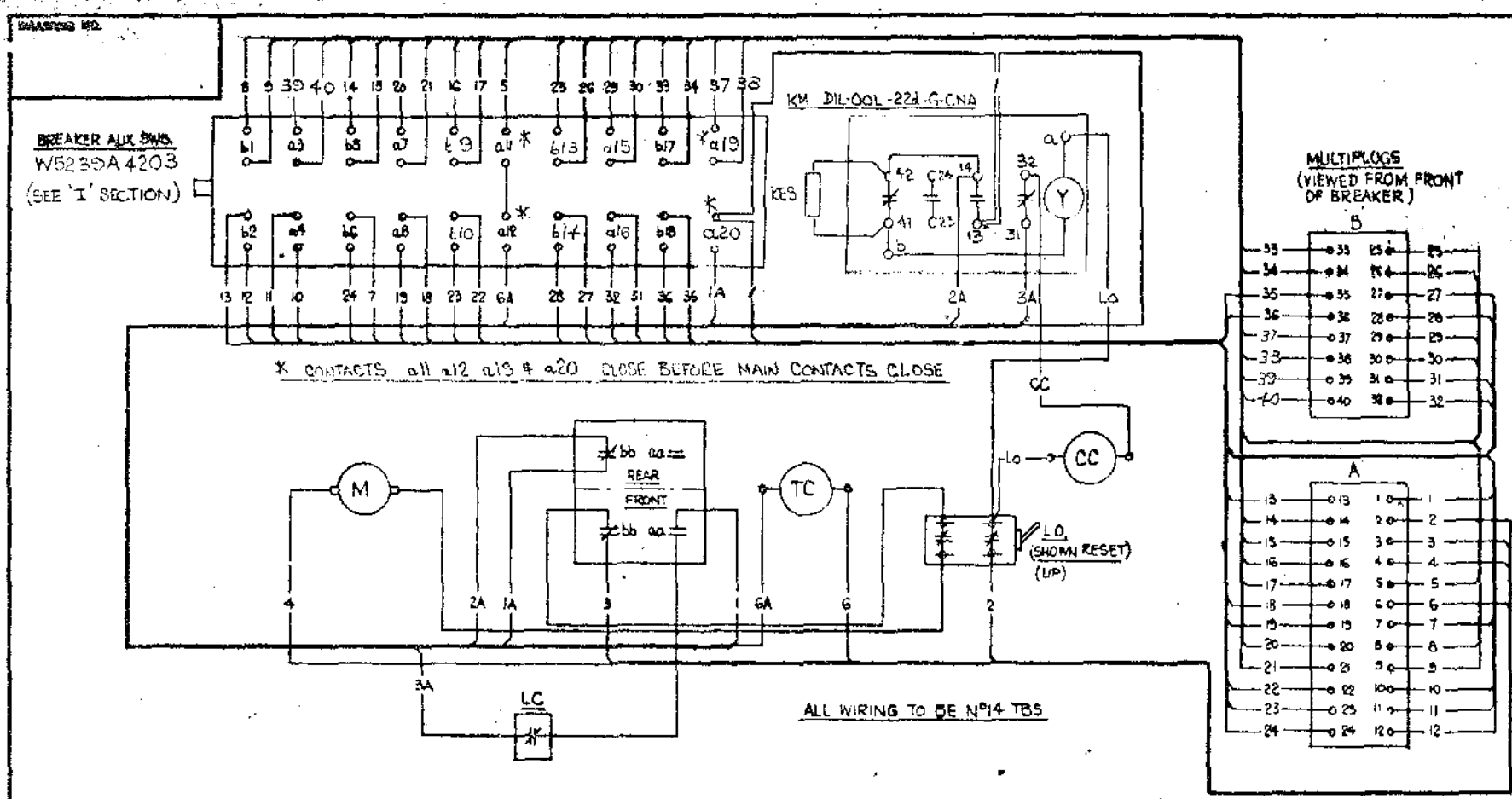

CERTIFIED PRINT (STD)

FEB 8/77

REPRODUCIBLES LOCATED AT PLANTS	A	G	M	S	W

REVISIONS

3) GENERAL REVISION NJ APR 3-78
2) REVISED "Y" NJ OCT 7/76
1) REVISED CONNECTION TO "CC" RD JUL 7/76

WIRING DIAGRAM FOR DST2 CIRCUIT BREAKER 10-STAGE AUX. DC 'Y' RELAY

DR. BY AC	DATE JULY 20/72	SCALE	S.O. STD# 12
APP. BY	DATE JULY 20/72	CHECKED	ISSUED

FPE-PIONEER ELECTRIC LIMITED
PIONEER ELECTRIC DIVISION
GRANBY — TORONTO — WINNIPEG
REGINA — RED DEER

DRAWING NO.
W5239B5752

SPRING - CHARGED OPERATING MECHANISM

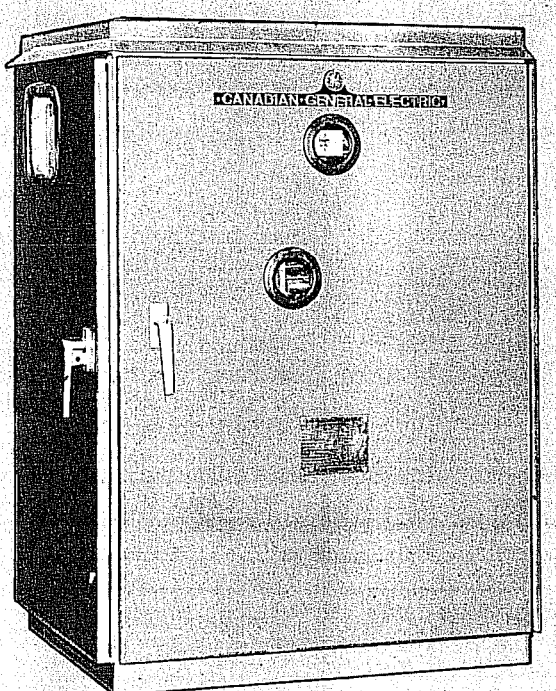

TYPE ML-14

FOR OIL - BLAST CIRCUIT BREAKERS

These instructions do not purport to cover all details or variations in equipment nor to provide for every possible contingency to be met in connection with installation, operation or maintenance. Should further information be desired or should particular problems arise which are not covered sufficiently for the purchaser's purposes, the matter should be referred to the nearest office of Canadian General Electric Company Limited.

SPRING - CHARGED OPERATING MECHANISM TYPE ML-14

INTRODUCTION

The Type ML-14 mechanism is a spring operated mechanism for outdoor oil-blast circuit breakers. It is designed for high speed operation during the circuit breaker interruption of faults and high speed reclosing. It is mechanically trip-free and non-pumping when closed on short circuits. Its high speed characteristic is the result of a simple, rugged linkage design having low-friction bearings.

The mechanism and associated operating equipment are enclosed in a weatherproof housing designed for mounting on the front end of the breaker. DC voltage is required for the control circuit. AC voltage is recommended for the spring charging motor and required for the heater circuits. Since the control circuit requires very low operating currents, the necessity for large storage batteries or rectifiers is eliminated. Batteries are recommended for the DC source. The mechanism and its accessories will operate at the standard ASA voltage ratings. The breaker nameplate is mounted on the outside of the front door of the mechanism housing.

Proper installation and maintenance are necessary for continued satisfactory operation. The following instructions will provide information for placing the mechanism and breaker in service and for the necessary maintenance. It should be kept in mind that the illustrations in the instruction book are for illustrative purposes and may not always be an actual picture of the equipment being furnished. For final information always refer to the drawings that are furnished separately with the equipment. For additional instructions on the circuit breaker, refer to the breaker instruction book.

RECEIVING, HANDLING AND STORAGE

Each mechanism is carefully inspected and packed by workmen experienced in the proper handling and packing of electrical equipment. Immediately upon receipt of a mechanism, an examination should be made for any damage sustained during shipment. If injury or rough handling is evident, a damage claim should be filed with the transportation company, and the nearest Canadian General Electric Apparatus Sales Office should be promptly notified.

The crating or boxing must be removed carefully using a nail puller.

Check all parts against the packing list to make certain that no parts have been overlooked while unpacking. Always search the packing material for hardware that may have loosened in transit.

If the mechanism cannot be installed in the proper location immediately, and it is necessary to store the equipment, it should be kept in a clean, dry place protected from mechanical injury. Machined parts should be coated heavily with grease to prevent rusting. If stored for any length of time, periodic inspections should be made to see that corrosion has not taken place and to insure good mechanical condition. If possible, the space heater should be energized to prevent moisture condensation inside the mechanism housing.

Should the mechanism be stored under unfavorable atmospheric conditions, steps should be taken to dry out the mechanism before it is placed in service.

DESCRIPTION

The ML-14 spring-charged operator consists of motor-operated closing springs with the associated mechanism and control equipment. The unit is designed to operate large outdoor oil circuit breakers with provision for closing, opening, trip-free and reclosing operations.

The control house for this mechanism is a steel weatherproof house which contains a strip as a sealant around the doors. Inside this housing are located a

notor for charging the closing springs, closing prings operating mechanism, auxiliary switch and he control panel with its relaying, operating and ontrol switches and BCT terminal boards.

'ontrol voltages are given on the nameplate. The notor operating voltage is either AC or DC, but referably AC.

\lso provided on the equipment is a manual trip levice. This consists of a mechanism for manually ripping the breaker and a lock-out switch for opening he closing circuit, to prevent the breaker from :losing from a remote source when it is tripped by his mechanism locally.

WARNING

THERE IS A DEGREE OF HAZARD TO MANUAL CLOSING OF ANY POWER BREAKER INTO A LIVE SYSTEM. MANUAL CLOSING WITH THE BREAKER IN SERVICE MUST BE AVOIDED EXCEPT IN EXTREME EMERGENCY. OPERATE MANUALLY ONLY WHEN THE BREAKER HAS BEEN COMPLETELY DE-ENERGIZED AND ISOLATED.

INSTALLATION

During the installation of the mechanism, it is necessary to make reference to the instruction book for he oil circuit breaker that it operates.

The mechanism and housing are normally shipped fastened directly to the frame of the oil circuit breaker. The mechanism is installed and properly adjusted when received. The trip latches are fastened during shipment and this fastening should be removed after the breaker has been moved into position.

CONNECTIONS

After the mechanism has been mounted, electrical connections can be made. Before making these, precautions should be taken to see that all leads to be connected to the mechanism are de-energized.

Run control wires in conduit insofar as it is practicable. Control wires must be run separately and remote from high tension leads and not in the same duct or parallel to high tension leads unless the distance separating the two sets of wiring is sufficient to prevent possible communication between them as a result of short circuits.

Use control wiring of adequate size so that, with full operating current flowing to the operating mechanism, the voltage across the terminals of the mechanism will be within the limits specified as standard for the range of control voltage.

Use the proper connection diagram for each individual job for testing and making connections. The mechanism is wired completely at the factory to terminal boards mounted on the bottom of the control panel. Incoming conduits can be terminated in a removable plate in the housing floor directly under the terminal boards. This plate can be drilled to suit any conduit requirements. It is recommended that all conduits entering the mechanism housing be sealed off at their entrances to the housing.

ADJUSTMENTS

Although the mechanism has been adjusted and tested at the factory, it is advisable to check all the following points as well as those listed under FINAL INSPECTION to be sure that no change has occurred during shipment and installation. No adjustments should be altered unless this inspection indicates it is necessary.

Use manual operation for all preliminary inspection. After the mechanism is connected to the breaker, operate it slowly to see that the operation is smooth throughout the closing stroke, that no binding occurs, and that no excessive play is noticeable between parts. Electrical operation should be attempted only after it is certain that all mechanism adjustments are made correctly and that the oil circuit breaker is correctly adjusted according to its instructions.

The breaker and mechanism adjustments must be checked when the mechanism is being manually closed since the mechanism can only be operated slowly in the closing direction.

CAUTION

Under no circumstances should the breaker be tripped manually or electrically without oil in the tanks until the breaker instruction book has been referred to for the proper procedure of opening the breaker without oil in the tanks.

Manual operation of the mechanism should not be attempted until the bearing surfaces of the mechanism have been checked for lubrication. Refer to the section on lubrication for the proper oils and greases.

MANUAL OPENING

The breaker can be tripped manually by operating the manual trip lever (4, figure 1). This will give an opening operation very similar to that obtained when the breaker is tripped electrically. The breaker cannot be opened slowly.

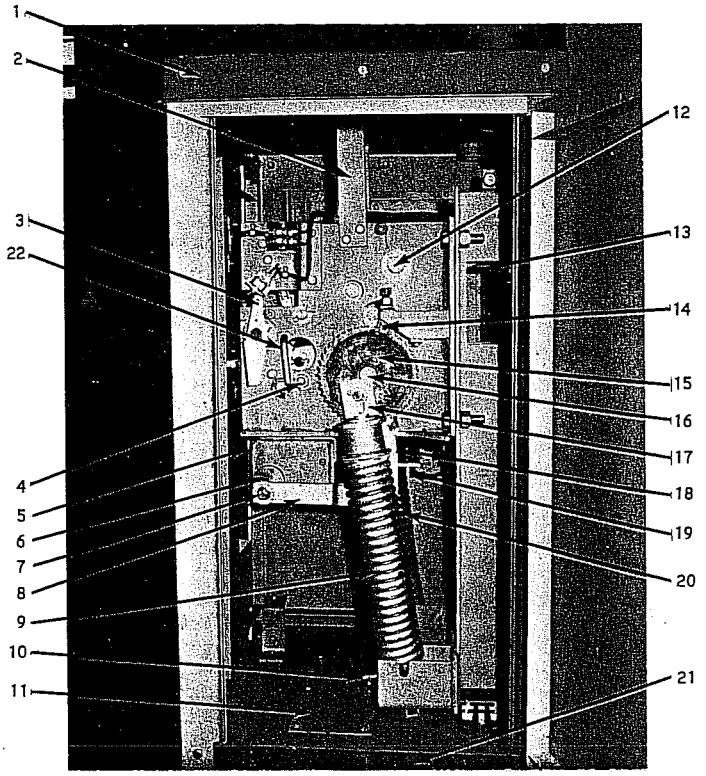

(8915803A)

1. Mechanism House
2. House Support Bracket
3. Manual Trip Lever
4. Trip Latch Clearance Adjustment Eccentric
5. Manual Close Push Rod
6. Eccentric
7. Manual Charging Stud (5/8 inch hex)
8. Driving Link
9. Right Closing Spring
10. Right Closing Spring Blocking Device
11. Access Plate (Customer's Wiring)
12. Output Crank Main Shaft
13. Output Crank
14. Latching And Safety Pawls
15. Ratchet Wheel
16. Cam Shaft
17. Guide Block
18. Closing Coil (52CC)
19. Closing Coil Plunger
20. Left Closing Spring
21. Weatherstrip
22. Trip Latch Blocking Pin

Figure 1 Right Side View Of Mechanism

MANUAL CLOSING

To operate the mechanism manually, charge the breaker closing springs manually using a 5/8 inch ratchet wrench on the manual charging stud (see figure 2) to turn the driving eccentric (6). Turning the driving eccentric counter clockwise will advance the ratchet wheel (3) and compress the closing springs.

When the springs have reached the fully charged position the indicator will read "CHARGED", and the driving pawl (4, figure 2) will be raised from the ratchet wheel teeth. Additional turning of the eccentric will not advance the ratchet wheel. The latching and safety pawls (16, figure 1) work in conjunction with the driving pawl to prevent the ratchet wheel (3, figure 2) from turning backwards due to the force of the closing springs as the ratchet wrench is operated.

Insert the spring blocking device and manually discharge the springs against the pins by pushing the manual close button (1, figure 2). The springs are now blocked and slow closing of the breaker contacts can be accomplished by again turning the driving eccentric with a 5/8 ratchet wrench.

During the slow closing operation, check to insure that the mechanism does not stick or bind during the entire stroke, that it latches securely in the closed position, and that it trips freely when the manual trip lever (4, figure 1) is operated. The breaker should not be operated electrically until it has been operated several times manually to insure freedom of action. At this time, also check the breaker adjustments as given in the breaker instruction book.

WARNING

DO NOT WORK ON EITHER THE BREAKER OR MECHANISM UNLESS THE CLOSING SPRINGS AND TRIP-LATCH ARE BLOCKED. THIS PRECAUTION IS REQUIRED TO PREVENT ACCIDENTAL CLOSING OR TRIPPING.

After the adjustments have been checked, the springs can be unblocked. Rotate the driving eccentric until the indicator reads "CHARGED" and the ratchet wheel no longer is advanced. The closing spring blocking devices can now be removed. Do not operate the manual close button while the breaker is in the closed position as damage to the linkage, ratchet wheel and pawls might occur. This damage would be caused by the energy of the springs not being absorbed by the mechanism linkage and breaker in the spring hitting a stationary linkage instead of pushing a movable linkage.

Operate the circuit breaker electrically several times. Check the control voltage as described under CONTROL POWER CHECK.

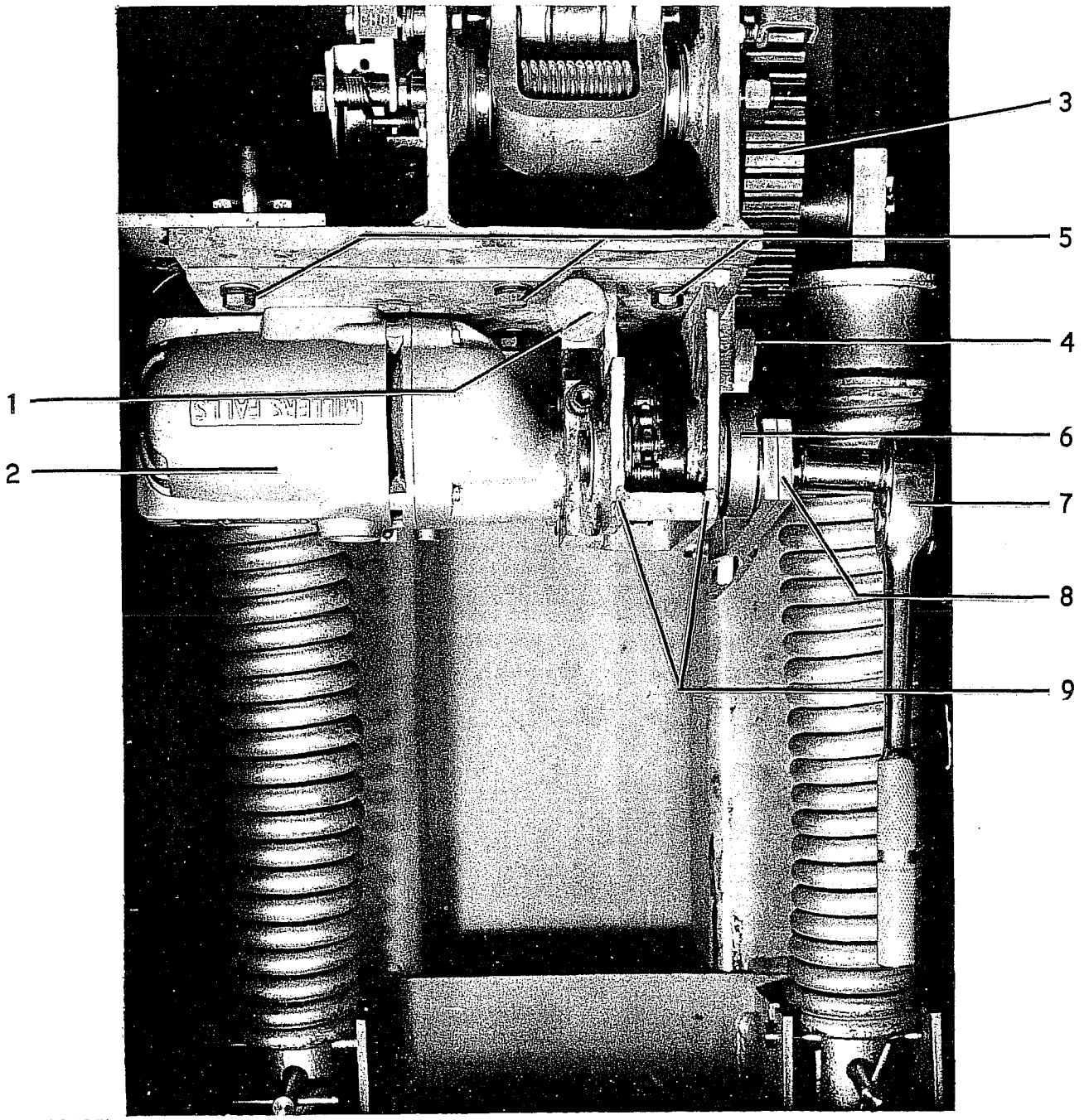

(8038425)

1. Manual Close Push Rod Button
2. Spring Charging Motor
3. Ratchet Wheel
4. Driving Pawl
5. Motor Mounting Bolts
6. Eccentric
7. Manual Spring-charging Ratchet Wrench - 5/8''
8. Driving Link
9. Motor Support and Bearing Housing

Figure 2 Driving Elements

CAUTION

If the breaker secondary wiring is to be given a hi-potential test at 1500 volts AC, remove both the motor leads from the terminal connection. Failure to disconnect the motor from the circuit may cause damage to the winding insulation.

TRIP LATCH WIPE
Refer to figure 3. The wipe (U) of the trip latch (23) on the trip latch roller (26) should be from 0.18 inch to 0.26 inch. This can be measured by putting a film of grease on the latch closing the breaker part way and tripping. The mechanism has the proper trip latch wipe when the latch rests against the stop pin (25). No adjustment is provided and a visual inspection is usually all that is required. If this setting is not correct, look for insufficient travel of the trip shaft.

WARNING

WHEN WORKING ON THE MECHANISM IN THE CLOSED POSITION, KEEP FINGERS CLEAR OF THE LINKAGE, AS ACCIDENTAL TRIPPING CAN CAUSE SEVERE INJURY.

Use the trip latch blocking pin tool which is inserted in the trip latch blocking pin hole (24, figure 1) until it extends beyond the opposite frame.

TRIP LATCH CLEARANCE
With the breaker in the tripped position and the closing springs charged, check the clearance (R, figure 3) between the trip latch (23, figure 3) and the trip latch roller (26). It should measure 0.03 inch to 0.06 inch.

To change the adjustment, (N, figure 4) loosen the locknut (26, figure 4) at the trip latch clearance adjustment eccentric and the set screw (25) with the breaker in the tripped position. Adjust the eccentric as necessary. Adjust the trip latch clearance by turning the eccentric in a clockwise direction while decreasing the clearance. This will lock the eccentric. Tighten the locknuts on the eccentric after adjusting the eccentric.

PROP CLEARANCE
With the breaker closed as far as possible, that is, with the springs blocked and the cam (12, figure 3) rotated so that the cam follower roller shaft (10) is at its maximum height over the prop (7), the clearance (V) between the prop and prop pin should be 0.06 inch to 0.16 inch. No adjustment is provided and a visual inspection is usually all that is required.

PROP WIPE
With the breaker closed and the linkage resting on the closing prop (7, figure 3) the prop wipe (K) should be 0.18 inch to 0.38 inch from the cam follower roller shaft (10) to the edge of the prop. No adjustment is provided and a visual inspection is usually all that is required.

CLOSING LATCH WIPE
The wipe (X, figure 5) between the closing latch (6, figure 5) and the closing latch roller (30) should be 0.18 inch to 0.26 inch. If resetting is required, loosen, set and retighten the adjustment screw (8) then tighten the locking nut (9).

CLOSING LATCH MONITORING SWITCH
The closing latch (6, figure 5) must be fully reset and the closing latch monitoring switch (14) operated before the motor (37) will start. The closing latch monitoring switch should be wiped by the operating lever (20, figure 6) so that the clearance (T, figure 3) between the operating lever and the switch mounting bracket is 0.03 inch or less. To obtain this adjustment, bend the monitoring switch operating lever as necessary. Be sure the latch is fully reset before making any adjustments.

MOTOR LIMIT SWITCHES
With the closing springs blocked, rotate the switch cam (4, figure 5) until the motor limit switch striker (26) has traveled the maximum amount (about 180 degrees rotation of the cam). Loosen the support bolt (29) and rotate the switch support until the gap (Z, figure 5) between the motor limit switch striker (26, figure 5) and the switch support is 0.03 inch or less.

AUXILIARY SWITCH - TYPE SB-1
The auxiliary switch (1, figure 6) is mounted on the left side of the operating mechanism frame (11). The linkage (2) attached to the pin (2, figure 3) of the output crank (4) operates the auxiliary switch shaft which opens and closes the 'a' and 'b' contacts. The 'a' contacts are open when the breaker is open and the 'b' contacts are open when the breaker is closed. The 'a' contacts need only to be checked to make certain they are open when the breaker is open. The 'b' contacts need only to be checked to see that they are open when the breaker is closed. No adjustment is provided and a visual inspection is usually all that is required.

DRIVING AND LATCHING PAWL ADJUSTMENT
The driving pawl must advance the ratchet wheel sufficiently on each stroke to allow the latching pawl to fall into the ratchet teeth of the ratchet wheel. This should be checked with the major portion of the closing spring load against the driving members. With the mechanism unblocked, manually charge the closing springs with the manual charging wrench until they are slightly more than half charged.

NOTE

The position referred to above is (9) teeth counter clockwise from the 0.161 diameter hole in ratchet wheel. This is when the major load is on the mechanism.

Slowly rotate the charging wrench until the driving pawl has advanced the ratchet tooth to its maximum

1. Mechanism Frame Tie Rod
2. Output Crankshaft Pin
3. Output Crank Main Shaft
4. Output Crank
5. Spacer and Spring Pin
6. Rod Lower Coupling
7. Closing Prop
8. Cam Shaft
9. Cam Shaft Bearing
10. Cam Follower Roller Shaft
11. Cam Follower Roller
12. Cam
13. Closing Latch Shaft
14. Monitoring Switch Operating Lever
15. Monitoring Switch
16. Trip Coil
17. Stop Pin
18. Trip Coil Plunger
19. Trip Coil Linkage
20. Trip Crank
21. Mechanism Frame Tie Rod
22. Trip Latch Spring
23. Trip Latch
24. Trip Latch Guide Roller
25. Stop Pin
26. Trip Latch Roller
27. Trip Latch Roller Shaft
28. Clearance Adjustment Eccentric Shaft
29. Link Shaft
30. Support Link
31. Support Link Spring
32. Link
33. Motor Support Bracket
34. Manual Close Push Rod Button

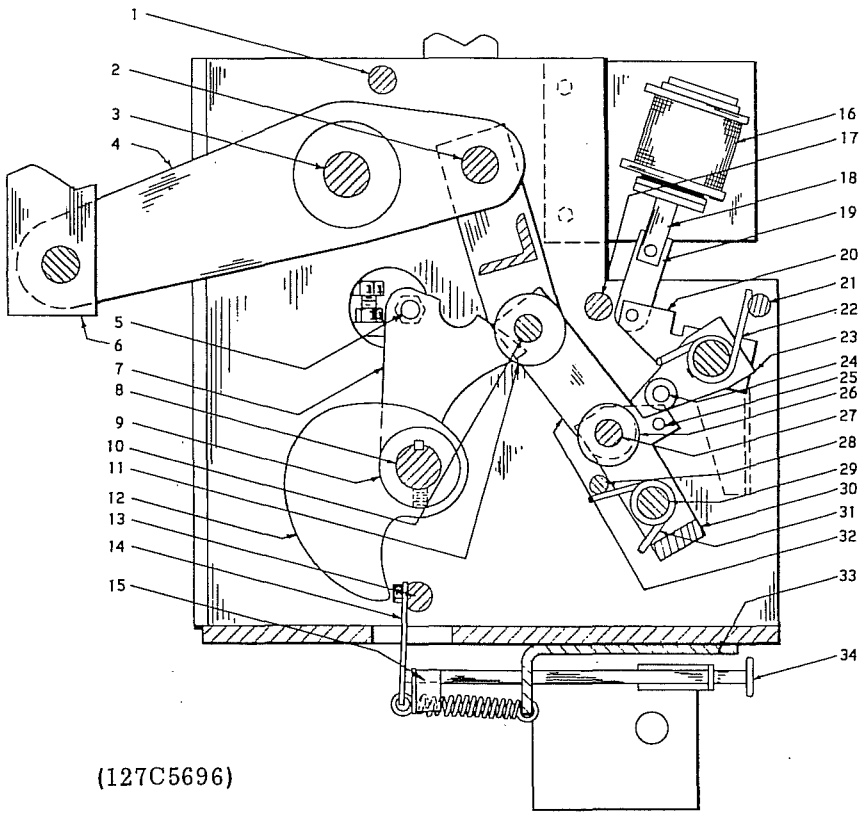

(127C5696)

Linkage In Latch Closed Position

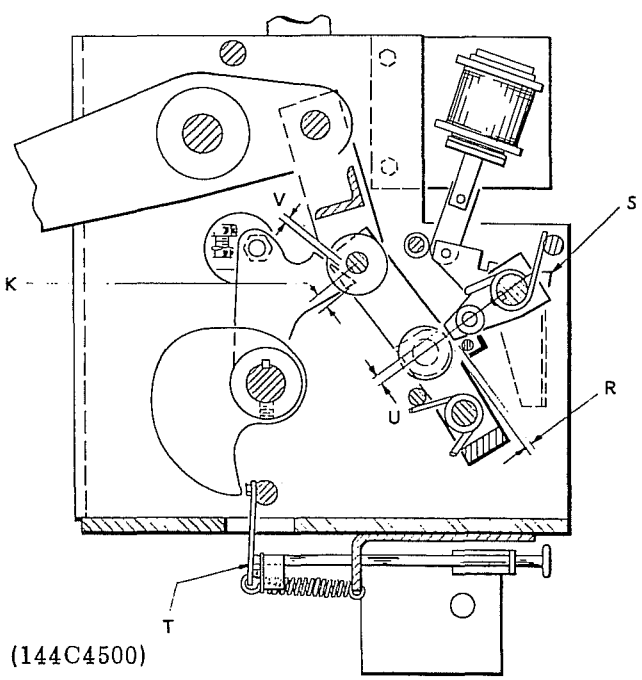

(144C4500)

Adjustments And Final Clearance Checks

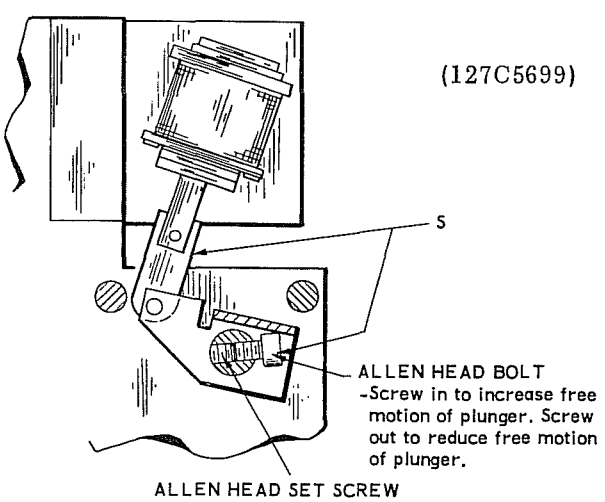

(127C5699)

Section Showing Adjustment Of Trip Coil Plunger (S)

Figure 3 Left Side Section Of Mechanism (Section A-A)

travel as shown in figure 4(b) of this instruction. Now check the latching clearance between the ratchet tooth and the outboard latching pawl 'P' dimension should equal approx. 0.06''. Adjust motor support bracket if necessary to obtain 'P' dimension, then tighten jacking screw and lock in position with locking nut as shown on drawing 161B4560.

To check the 'Q' dimension shown in figure 4(c) of this instruction, slowly rotate the charging wrench counter clockwise thus allowing the outboard latching pawl to rest on the ratchet tooth and the driving pawl to travel to its maximum clockwise position. 'Q' dimension should equal approx. 0.02''.

CAUTION

If adjustment is required for either pawl, the closing springs must first be fully charged and blocked before loosening the motor support bracket mounting bolts. When the adjustment is made, the right-hand side motor support bracket mounting bolts are to be tightened first, to assure proper alignment. After tightening the remaining bolts and the jacking screw, the springs should be released and the clearances checked again as described above.

LATCHING PAWL TO RATCHET WHEEL CLEARANCE

The latching pawl (23, figure 4) (which is the outboard pawl at this location) must have a 0.015 to 0.030 inch clearance above the teeth of the ratchet wheel (29) when the closing springs are completely charged (H, figure 4). This is checked with the closing springs completely closed and blocked by measuring the distance between the outboard latching pawl and the ratchet tooth with the pawl raised as high as possible. This is adjusted by loosening the locknut (22, figure 4) and adjusting the latching and safety pawls' adjustment screw (21) as necessary. The safety pawl, (inboard of the latching pawl) will then have up to a 0.060 inch clearance.

This can also be checked by measuring the distance between the bottom of the latching and safety adjustment screw and the top surface of the latching pawl when the closing springs are completely charged.

TRIP LATCH CHECKING SWITCH

Rotate the trip latch (23, figure 3) clockwise (looking at the left side of the mechnism) by pressing the manual trip lever (42, figure 6) to open the latch checking switch operating lever (23, figure 5). Allow the trip latch to reset slowly and determine the point at which the contacts of the trip latch checking switch (22) make by using a circut continuity tester, such as a light indicator or bell set. The contacts of the trip latch checking switch should just make (see W and Y, figure 5) when there is a 0.06 inch gap between the trip latch (23, figure 3) and the stop pin (25) located on the trip latch assembly support link (30). There should be a minimum of 0.015 inch between the operating lever and the trip latch checking switch (22, figure 5). Bend the trip latch checking switch operating lever as necessary to adjust.

TRIP COIL PLUNGER

Refer to S, figure 3. The plunger (18, figure 3) of the trip coil (16) must have 0.12 inch free travel before the trip latch (23) starts to move to provide proper tripping at reduced voltages. This is adjusted by loosening the Allen set screw which is located in the trip latch shaft (24). This set screw bears against the Allen head bolt (40, figure 6) securing the bolt in place and is inserted into the trip latch shaft from the front of the trip latch shaft. The Allen head bolt must be removed from the trip latch shaft before the Allen set screw can be moved. Rotate the trip crank about the trip latch shaft until the correct free travel of the trip coil plunger is obtained. Adjust the Allen head bolt to contact the trip crank at this point. Install the Allen screw from the front side of the trip latch shaft then tighten the Allen head adjusting bolt. This free travel must be sufficient so that the breaker is able to trip at its minimum trip voltage. The values are in a chart under FINAL INSPECTION.

CLOSING COIL PLUNGER

The closing coil plunger (13, figure 5) of the closing coil (11) must have a minimum of 0.12 inch free travel (see F, figure 5) before the tang of the closing latch is contacted. If this free travel is less than 0.12 inch, remove the coil and file the plunger until it has 0.12 inch free travel.

MANUAL TRIP LEVER

The manual trip lever (8, figure 4) is adjusted to hang vertically, or forward of vertical so that the trip latch is pushed clear of the trip roller, by adjusting the manual trip adjusting bolt (6, figure 4) as required.

FINAL INSPECTION

After the mechanism has been installed with all mechanical and electrical connections completed, make the following inspection and test:

1. See that the mechanism is properly set up and securely fastened to the breaker framework.

2. Review the adjustments shown in table 1.

3. Check that all bolts, nuts and screws are properly tightened and that all washers and cotter pins are in place with cotter pin ends effectively bent over.

4. Inspect all wiring for damage during installation work, check terminal connections for loose screws, and test for possible grounds or short circuits.

1. Trip Coil
2. Trip Coil Linkage
3. Trip Crank
4. Trip Latch Blocking Pin Hole
5. Trip Latch Shaft
6. Manual Trip Adjusting Bolt
7. Manual Trip Lock Nut
8. Manual Trip Lever
9. Link Shaft
10. Mechanical Frame
11. Manual Close Push Rod Button
12. Driving Eccentric
13. Spring Charging Motor
14. Driving Eccentric Bearing
15. Mechanism House Adjusting Bolt
16. Mechanism House Support Bracket
17. Breaker Operating Rod
18. Output Crank Main Shaft
19. Rod Locking Bolt
20. Rod Lower Coupling
21. Latching Pawls Adjusting Screw
22. Latching Pawls Adjusting Locknut
23. Latching Pawl
24. Output Crank
25. Set Screw
26. Trip Latch Clearance Locknut
27. Driving Crank Bushing
28. Cam Shaft
29. Ratchet Wheel
30. Sprocket
31. Guide Block
32. Driving Pawl
33. Driving Pawl Return Spring
34. Closing Coil
35. Closing Coil Support Bracket
36. Driving Crank
37. Driving Link Bushing
38. Driving Link

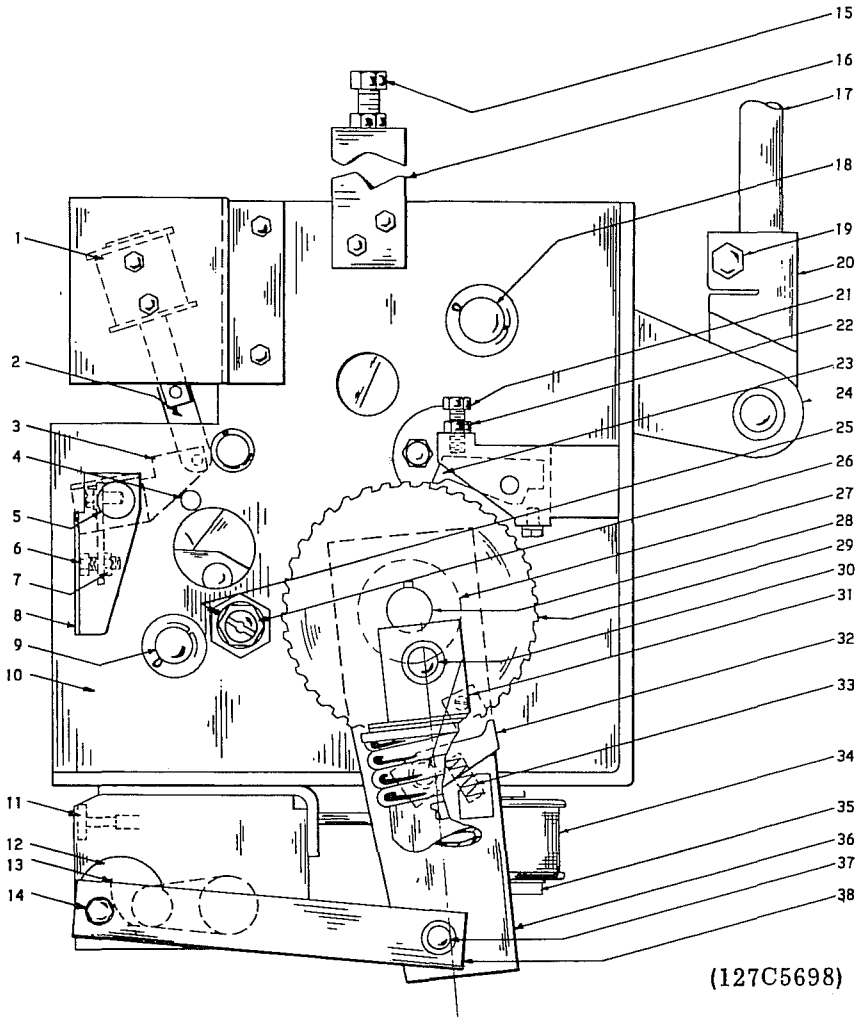

Right Side View Of Mechanism In Latch Closed Position

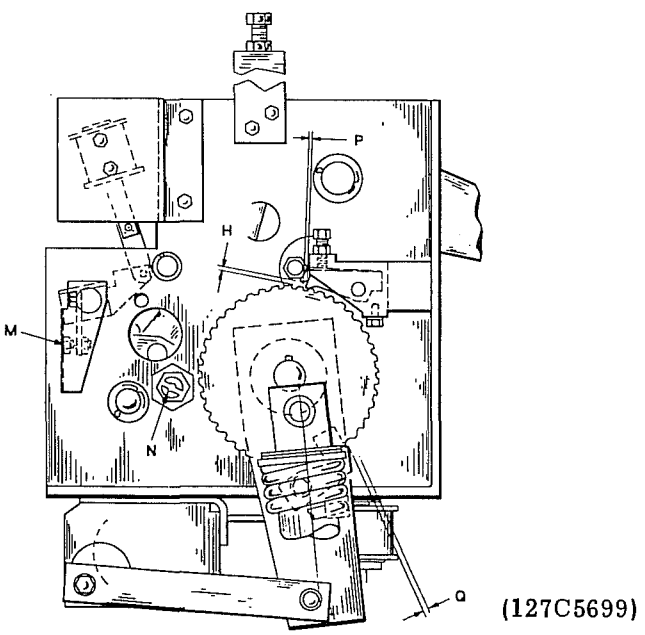

(a) Adjustments And Final Clearance Checks

Figure 4 Right Side View Of Mechanism

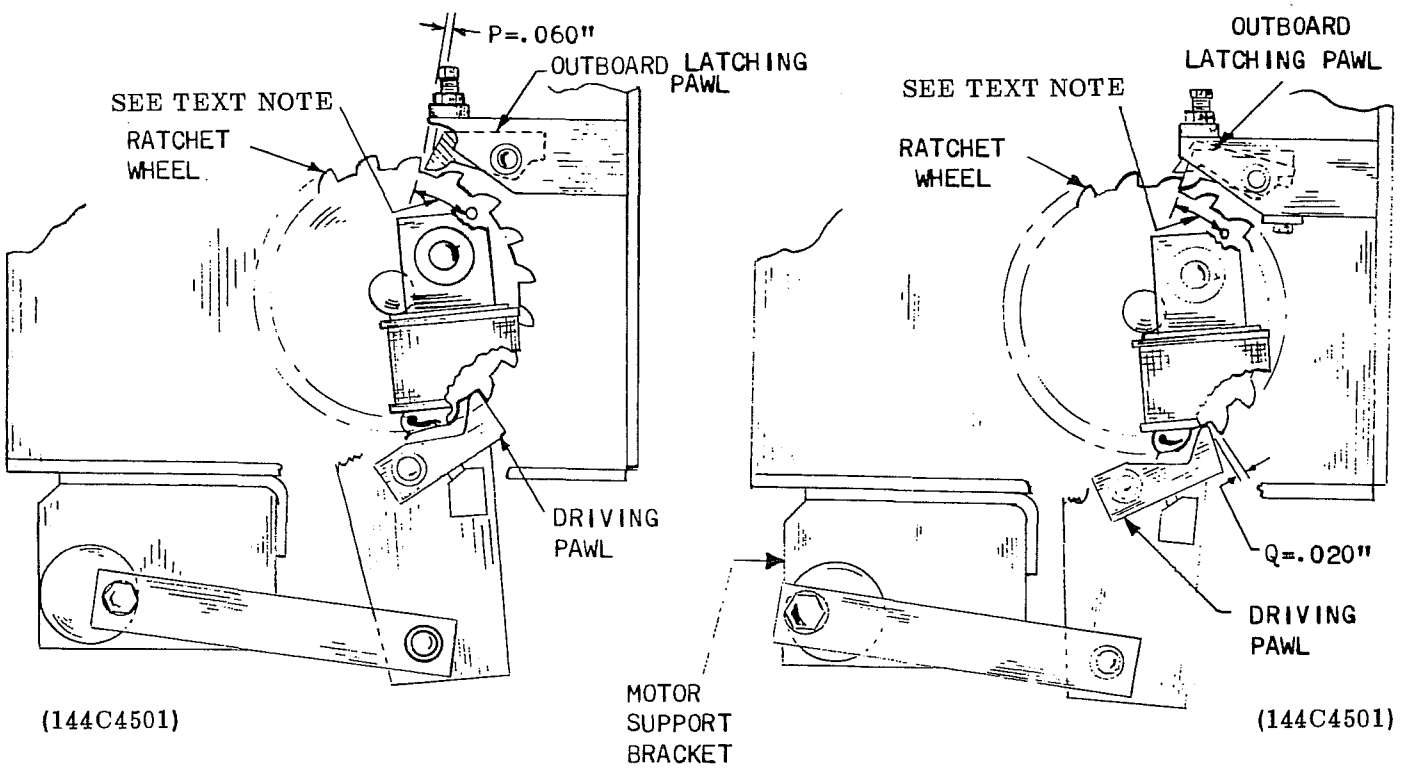

(b) Latching Pawl Adjustment

(c) Driving Pawl Adjustment

Figure 4(Cont'd) Right Side View Of Mechanism

1.	Trip latch wipe (with trip latch resting against stop pin)	(U, Fig. 3)	0.18 inch to 0.26 inch
2.	Trip latch clearance	(R, Fig. 3)	0.03 inch to 0.06 inch
3.	Trip latch nominal clearance	(R, Fig. 3)	0.045 inch
4.	Closing prop clearance	(V, Fig. 3)	0.06 inch to 0.16 inch
5.	Closing prop wipe	(K, Fig. 3)	0.18 inch to 0.38 inch
6.	Closing latch wipe	(X, Fig. 5)	0.18 inch to 0.26 inch
7.	Closing latch monitoring switch LC(C) maximum clearance	(T, Fig. 3)	0.03 inch
8.	Motor limit switches (44 and SCO) maximum clearance	(Z, Fig. 5)	0.03 inch
9.	Driving pawl minimum driving clearance	(Q, Fig. 4)	0.020 inch
10.	Latching pawl minimum latching clearance	(P, Fig. 4)	0.060 inch
11.	Latching pawl-ratchet wheel clearance	(H, Fig. 4)	0.015 inch to 0.030 inch
	The driving pawl and latching pawl clearance should be approximately equal.		
12.	Trip latch checking switch ("1c") minimum clearance	(Y, Fig. 5)	0.015 inch
13.	Trip latch checking switch ("1c") contacts just make when the gap between the trip latch and the stop pin is	(25, Fig. 3)	0.06 inch
14.	Trip coil plunger free travel minimum	(S, Fig. 3)	0.12 inch
15.	Closing coil plunger free travel minimum	(F, Fig. 5)	0.12 inch
16.	Space heater		functioning

Table 1 Summary of Adjustments

5. See that all bearing surfaces and the cylinder are properly lubricated. (Refer to OPERATION AND MAINTENANCE.)

6. Operate the breaker slowly with the manual charging wrench and note that there is no excessive binding or friction and that the breaker can be moved to the fully opened and fully closed positions.

7. Operate the mechanism electrically and check the following points:

   a) Closing, opening, reclosing and trip-free times.

   b) Minimum trip and closing voltage.

8. See that all points where the surface of the paint has been damaged during installation are repainted immediately.

9. Make a final check that the breaker is securely fastened to its foundation and properly leveled.

10. Check that the ground connections are properly made and tightened.

11. Make certain that all pipe plugs and bolted connections are properly tightened and that all covers and gaskets are properly installed to prevent entrance of moisture.

CONTROL POWER CHECK

After the mechanism has been closed slowly and opened several times with the maintenance closing wrench and the mechanism adjustments are checked as described, the closed circuit operating voltages should be checked at the release coil, trip coil, and motor terminals. For electrical operation of the mechanism, the control power may be either an alternating or direct current source. The operating ranges for the closing and tripping voltages are given on the breaker nameplate. The following ranges are standard:

Nominal Voltage	Closing Range		Tripping Range	
	Minimum	Maximum	Minimum	Maximum
48V DC	36 -	52V DC	28 -	60V DC
125V DC	90 -	130V DC	70 -	140V DC
250V DC	180 -	260V DC	140 -	280V DC
115V AC	95 -	125V AC	95 -	125V AC
230V AC	190 -	250V AC	190 -	250V AC

If the closed circuit voltage at the terminals of the coil or motor does not fall in the specified range, check the voltage at the source of power and line drop between the power source and breaker.

When two or more breakers operating from the same control power source are required to close simultaneously, the closed circuit voltage at the closing coil or motor of each breaker must fall within the specified limits.

Electrical closing or opening is accomplished by energizing the closing or trip coil circuit. It is also possible to trip or close the breaker manually by pressing the manual trip lever or the manual close button.

OPERATION

The ML-14 operating mechanism is of the stored-energy type designed to give high speed closing and opening. The mechanism will operate on AC or DC voltage. The operating voltage is indicated on the breaker nameplate. Closing and opening operations are controlled electrically by the remote relaying, and mechanically by the manual close and trip levers located behind the front door of the mechanism house.

SPRING CHARGING

The mechanism consists of a high speed gear motor (21, figure 6) that compresses a set of closing springs (22 and 57) through the action of a simple eccentric (51), a ratchet wheel (43), and pawl (49), assembly. The rotary action of the motor is converted to a short straight stroke pumping action through the eccentric and a driving link (54) that carries a spring-loaded driving pawl.

The driving pawl advances the ratchet wheel (29, figure 4) only a few degrees each stroke where it is held in position by the latching and safety pawls. When the ratchet wheel has been rotated approximately 180 degrees, the closing springs will be fully compressed. As the ratchet wheel continues to rotate, the spring load will shift overcenter and attempt to discharge, but will be prevented from discharging by the closing latch (6, figure 5). After only a few degrees of rotation, the closing latch roller (30) will engage the closing latch and the compressed springs will be held in repose until a closing operation is required. During the last few degrees of the ratchet wheel rotation, the motor limit switches are released and the driving pawl is raised from the ratchet wheel surface. This allows the motor and driving mechanism to coast to a natural stop expending all residual energy.

During the time the springs are being compressed, the cutoff and anti-pump relay 52Y locks the closing power circuits open. The 52Y relay will remain energized until the springs are fully charged and the control and motor limit switch contacts are reset.

1. Output Crank Main Shaft
2. Output Crank
3. Prop
4. Limit Switch Cam
5. Cam Shaft
6. Closing Latch
7. Closing Latch Shaft
8. Closing Latch Wipe Adjusting Screw
9. Closing Latch Wipe Adjusting Screw Locknut
10. Closing Latch Monitoring Switch Operating Lever
11. Closing Coil
12. Closing Coil Support Bracket
13. Closing Coil Plunger
14. Closing Latch Monitoring Switch 52/LC(C)
15. Closing Latch Spring
16. Mechanism House Support Bracket
17. Operation Counter
18. Auxiliary Switch
19. Prop Reset Spring
20. Stop Pin
21. Mechanism Frame
22. Trip Latch Checking Switch 52/LC(T)
23. Trip Latch Checking Switch Operating Lever
24. Trip Latch Shaft
25. Trip Latch Blocking Pin Hole
26. Motor Limit Switch Striker
27. Link Shaft
28. Charged-discharged Indicator
29. Motor Limit Switch Support Bolts
30. Closing Latch Roller
31. Motor Limit Switches
32. Motor Support Bracket
33. Motor Support Bracket Bolts
34. Manual Close Push Rod Button
35. Sprocket
36. Driving Chain
37. Spring-charging Motor

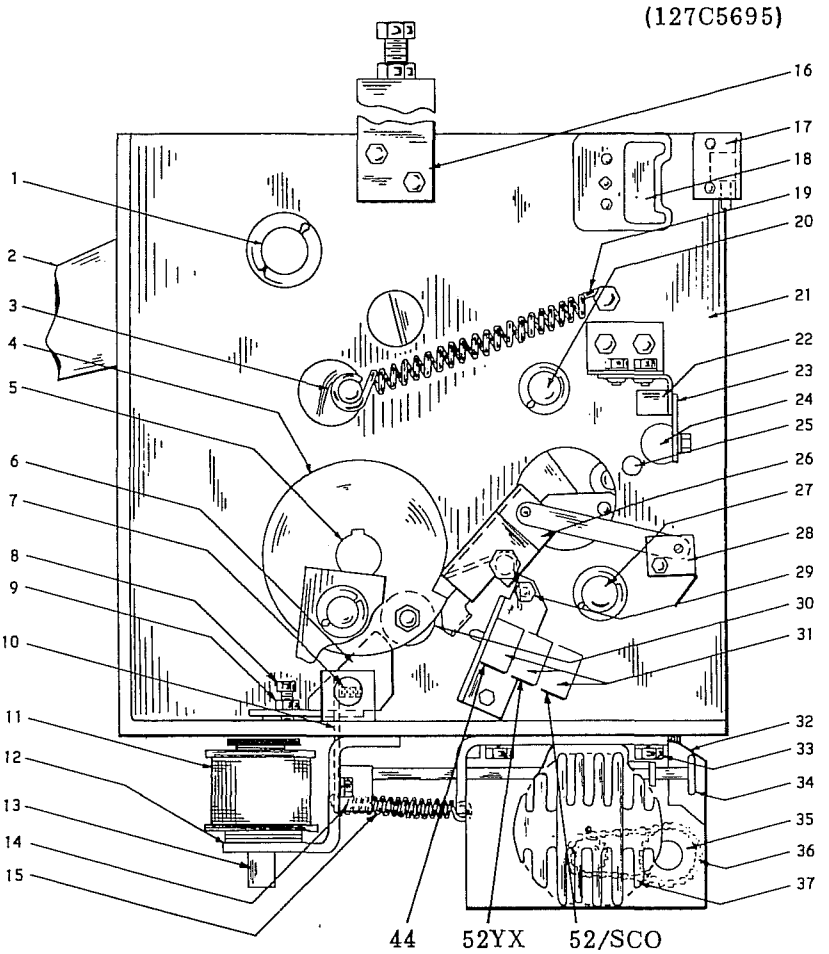

Left Side View Of Mechanism In Latch Closed Position

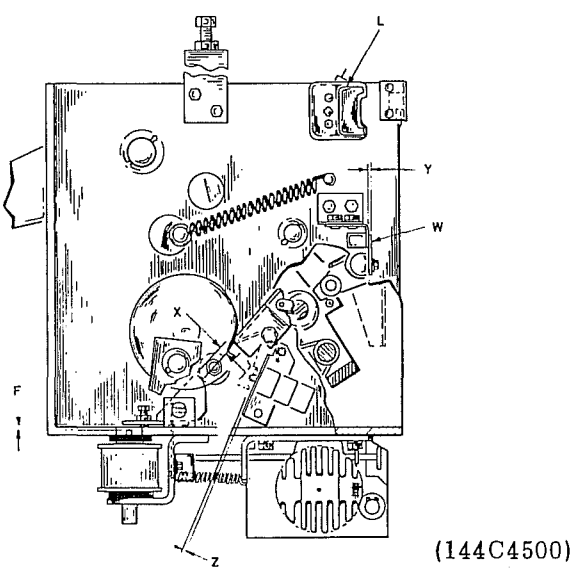

Adjustments And Final Clearance Checks

Figure 5 Left Side View Of Mechanism

The closing springs may be charged manually if control voltage is lost. A standard 5/8 inch ratchet wrench should be used to rotate the eccentric in a counterclockwise direction until the indicator reads "CHARGED" and the driving pawl no longer engages the ratchet wheel. The use of the ratchet wrench provides for maximum safety in the event that control power is suddenly restored without warning. In this event, the motor drive will take over again and continue to charge the springs while the ratchet wrench harmlessly turns in the unloaded direction. Opening the circuit will prevent the power from being applied when it is not required.

CLOSING OPERATION

Closing the breaker is accomplished by energizing the closing coil or by manually pressing the close button. In either case, the closing latch is rotated away from the closing latch roller, permitting the springs to discharge. The energy of the springs is applied to the rotation of a cam which closes the breaker through a simple linkage that remains trip free at all times. A monitoring switch operated by the closing latch will start the spring-charging motor after it is fully reset.

When the breaker is closed without power to the spring-charging motor, the cam (12, figure 3) is in the position of the dotted cam shown in figure 7. This is due to the motor not forcing the cam into the undotted cam position shown in figure 7 since the motor did not start charging the springs immediately upon closing the breaker as it does during a normal closing operation when the motor is energized.

OPENING OPERATION

An electrical opening operation is initiated by energizing the trip coil. This is accomplished either by actuating a remote trip circuit or by a combination of relays and current devices used to detect a fault on the load side of the breaker. When energizing the trip coil, the trip plunger rotates the trip latch causing the operating mechanism linkage to collapse. The energy stored in the breaker opening springs is thus released, opening the breaker. During this operation, the trip coil circuit is de-energized, and upon completion of the opening operation, the operating mechanism is returned to its normal position, ready for closing.

Manual tripping follows the same procedure except that instead of energizing the trip circuit, the manual trip lever is used. The mechanism cannot be operated slowly while opening.

When the breaker is opened after being closed without charging the closing springs, the cam is in the position of the dotted cam shown in figure 9. This is due to the motor not forcing the cam into the undotted position shown in figure 9 since the motor did not start charging the closing springs immediately upon closing the breaker as it does during a normal closing operation when the motor is energized.

TRIP-FREE OPERATION

If the trip coil circuit is energized while the breaker is closing, the trip coil plunger will force the trip latch away from the trip roller causing the mechanism linkage to collapse and the breaker to reopen. The closing cam will complete its closing stroke and the springs will recharge as in a normal closing operation. The position of the mechanism linkage during its operation is shown in figures 7, 8 and 9.

MAINTENANCE

PERIODIC INSPECTION

The operating mechanism of an oil circuit breaker must have regular systematic inspection during which every part is looked over carefully. The frequency of inspections should be determined by each operating company on the basis of the service to which the operating mechanism is subjected. Operating experience will soon establish a maintenance schedule that will give assurance of proper mechanism condition. An annual inspection and maintenance program is desirable in addition to a visual inspection at more frequent intervals. These inspections should be coordinated with an inspection of the breaker parts for maximum convenience.

PRECAUTIONS

Be sure that all primary and secondary circuits have been opened and grounded before any inspection or maintenance is attempted.

After any adjustment is made in the mechanism, operate manually to check the adjustment before operating electrically.

Use the connection diagram accompanying the operating mechanism in all cases when testing and connecting the mechanism.

When making adjustments in the mechanism or breaker, make certain that the closing springs are blocked as described under NORMAL CLOSING.

WARNING

DO NOT WORK ON THE BREAKER OR MECHANISM WHILE IN THE CLOSED POSITION UNLESS THE PROP AND TRIP LATCH HAVE BEEN SECURELY WIRED OR BLOCKED TO PREVENT ACCIDENTAL TRIPPING. DO NOT WORK ON THE BREAKER OR MECHANISM WHILE THE SPRINGS ARE CHARGED UNLESS THEY ARE SECURED IN THAT POSITION BY THE MAINTENANCE SPRING BLOCKING DEVICE.

1. Auxiliary Switch
2. Switch Operating Linkage
3. Prop Reset Spring
4. Trip Latch Checking Switch Support
5. Switch Operating Lever
6. Trip Latch Roller Shaft Bearing
7. Trip Latch Spring
8. Trip Latch
9. Trip Latch Stop Pin
10. Charged-Discharged Indicator
11. Mechanism Frame
12. Motor Limit Switches
13. Left Guide Block Bearing
14. Limit Switch Cam
15. Guide Block
16. Closing Latch Bearing
17. Closing Latch Shaft
18. Closing Latch
19. Motor Support Bracket Bolts
20. Monitoring Switch Operating Lever
21. Spring-Charging Motor
22. Left Closing Spring
23. Closing Spring Support
24. Spring Blocking Device
25. Mechanism House Adjusting Bolt
26. Mechanism House Support Bracket
27. Breaker Operating Rod
28. Operating Counter
29. Trip Coil Support
30. Trip Coil Shims
31. Trip Coil
32. Output Crank
33. Link
34. Trip Coil Plunger
35. Trip Coil Linkage
36. Latching Pawls Adjustment Screw
37. Latching Pawl
38. Trip Latch Shaft
39. Trip Crank
40. Trip Coil Linkage Adjustment
41. Trip Latch Roller
42. Manual Trip Lever
43. Ratchet Wheel
44. Right Guide Block Bearing
45. Driving Crank
46. Guide Block
47. Support Link Spring
48. Manual Close Push Rod Button
49. Driving Pawl
50. Sprocket Shaft Bushing
51. Driving Eccentric
52. Driving Chain
53. Manual Charging Stud
54. Driving Link
55. Sprocket
56. Motor Support Bracket
57. Right Closing Spring

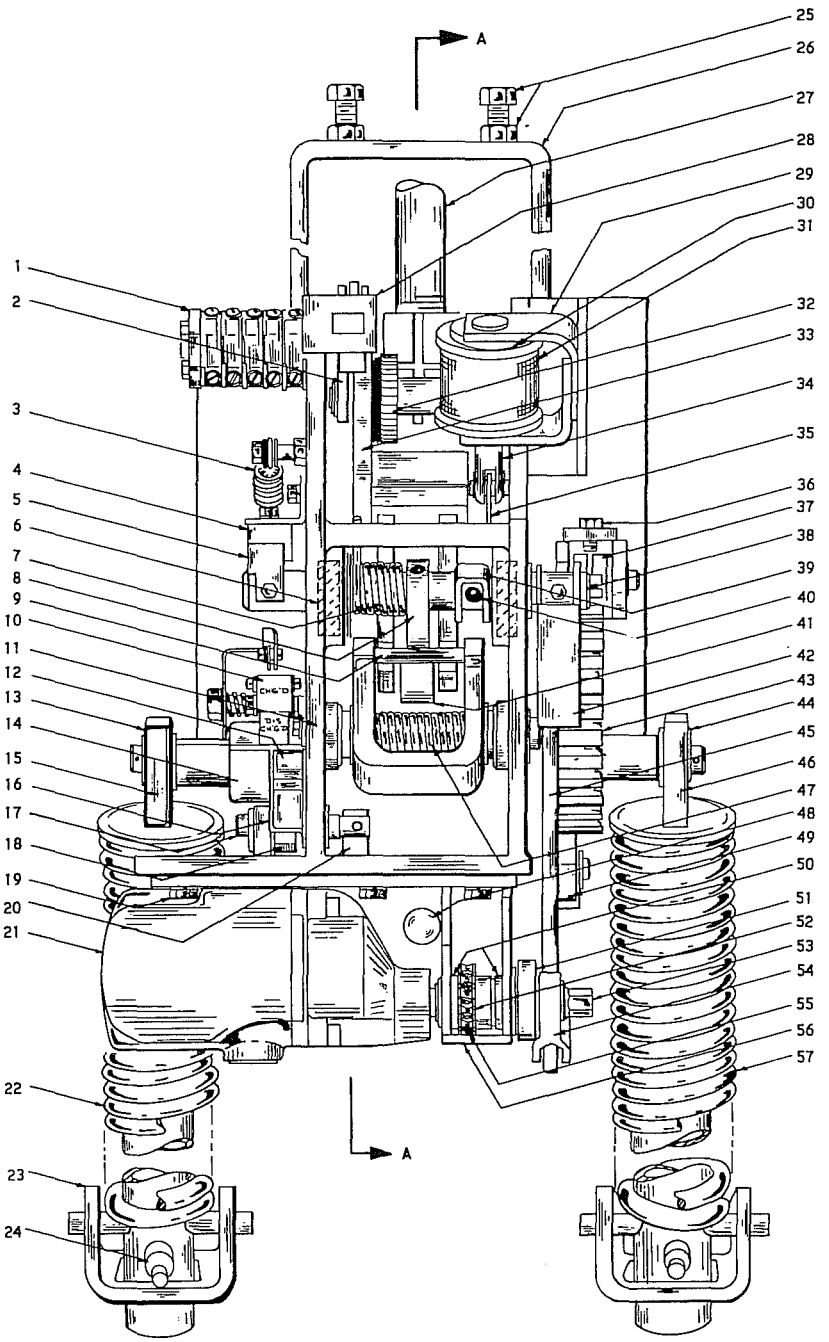

Figure 6 Front View Of Mechanism In Latch Closed Position

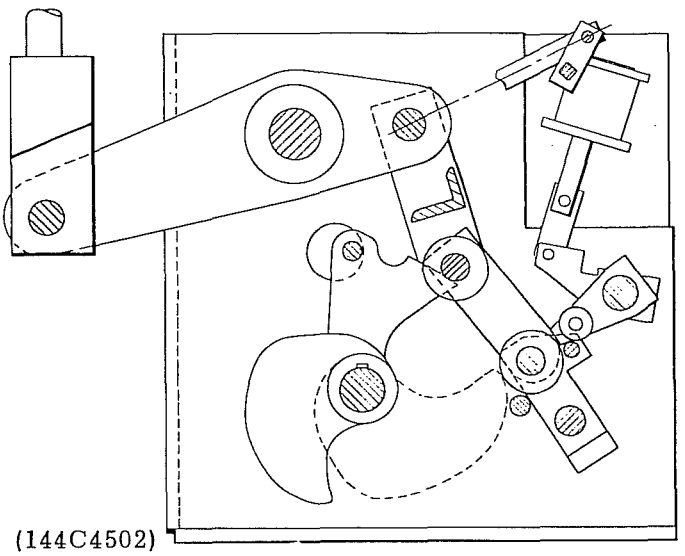

(144C4502)

Figure 7 Position of Linkage - Mechanism Closed

Solid Cam indicates closing spring charged.
Dotted Cam indicates closing spring discharged.

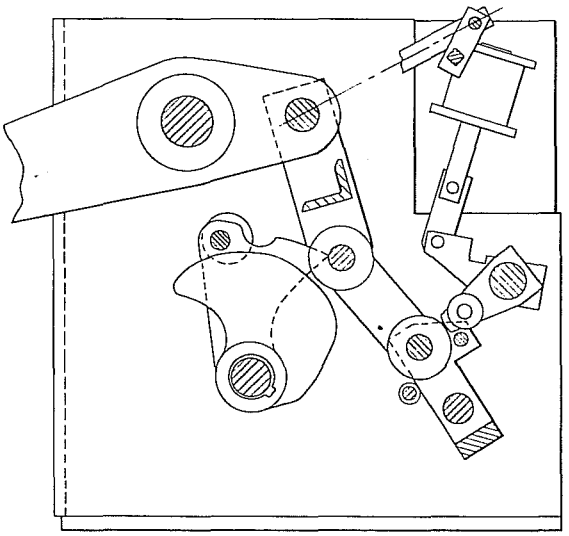

(144C4503)

Figure 8 Position of Linkage - Mechanism Going Closed

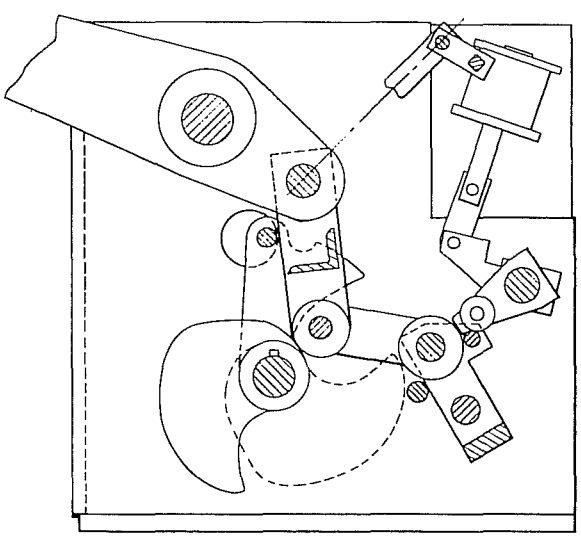

(144C4504)

Figure 9 Position of Linkage - Mechanism Open

Solid Cam indicates closing spring charged.
Dotted Cam indicates closing spring discharged.

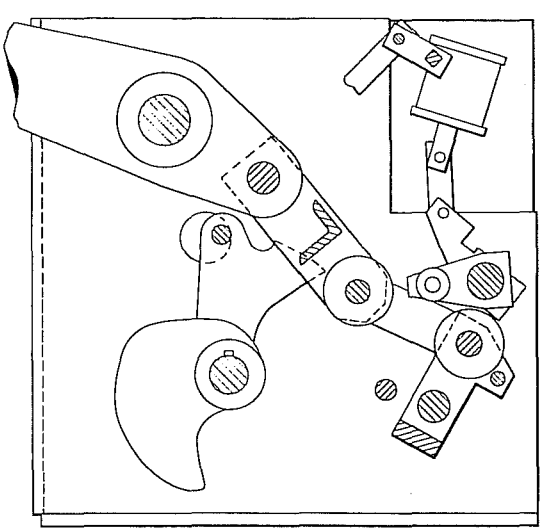

(144C4505)

Figure 10 Position of Linkage - Mechanism Going Open

A careful inspection should be made to check for loose nuts or bolts and broken retaining rings. All cam, roller, and latch surfaces should be inspected for any evidence of damage or excessive wear. Lubricate the mechanism as outlined under LUBRICATION, then, using the manual charging wrench, open and close the breaker several times to make certain that the mechanism operates freely throughout its entire stroke. Check the mechanism adjustments as specified under ADJUSTMENTS. Check all terminal connections.

INSULATION TEST

If the breaker secondary wiring is to be given a hipotential test at 1500 volts AC, remove both the motor leads from the terminal boards.

CAUTION

Failure to disconnect the motor from the circuit may cause damage to the winding insulation.

LUBRICATION

In order to maintain reliable operation, it is important that all mechanisms be properly lubricated at all times.

Even the finest oils and greases have a tendency to oxidize with age, as evidenced by hardening and darkening in color. Elimination of the hardened lubricant is essential for the proper operation of circuit breakers. Also, frequent operation of the mechanism causes the lubricant to be forced out from between the bearing surfaces. A simple lubrication will often clear up minor disturbances which might be mistaken for more serious trouble.

A definite lubrication schedule should be set up taking into consideration the frequency of operation of the mechanism and local conditions. Until such a schedule is worked out, the mechanism should be lubricated at each periodic inspection and also whenever it is overhauled, in accordance with the lubrication chart. It is also recommended that all circuit breakers and their associated operating mechanisms be operated at regular intervals to insure the user that the equipment is operating freely.

The lubrication chart is divided into two methods of lubrication. The first method outlines the maintenance lubrication which should be performed at the time of periodic maintenance, and requires no disassembly. The second method outlines a lubrication procedure similar to that performed on the breaker at the factory, but should be used only in case of a general overhaul or disassembly for other reasons, or if the operation of the breaker becomes slower.

CLEANING BEARINGS

ROLLER AND NEEDLE BEARINGS

The cam follower bearings (11, figure 3), trip latch roller bearing (26), and the cam shaft bearings (9), should first be removed from the mechanism and the inner race disassembled. They should then be placed in a container of clean petroleum solvent or similar cleaner.

PART	LUBRICATION AT MAINTENANCE PERIOD	ALTERNATE LUBRICATION (REQUIRES DISASSEMBLY)
Sleeve Bearings - Textolite Bearings - driving pawl - closing prop, etc.	Light application of machine oil SAE 20 or SAE 30.	Film of grease.*
Sleeve Bearings - Bronze Bearings - latching pawls - driving eccentric, driving crank, driving link.	Light application of machine oil SAE 20 or SAE 30.	Remove bearings or links, clean per instructions and lubricate liberally.*
Roller and Needle Bearings - Guide block, cam shaft, closing latch shaft.	Light application of machine oil SAE 20 or SAE 30.	Clean per instructions and repack with lubricant.*
Ground surfaces such as cams, ratchet teeth, etc. (Surfaces coated with M_oS_2).	No lubrication required	No lubrication required.
Ground surfaces such as latches, rollers, prop, etc.	Wipe clean and apply lubricant *	Wipe clean and apply lubricant. *
Sealed Bearings - trip latch roller shaft.	Cannot be lubricated	Replace when they become sluggish.
Motor Gear Box	Not normally required. Lubricate when motor becomes sluggish	Clean and apply Texaco 'All Temp' or a similar lubricant.

* Beacon 325 grease or equivalent.

Table 2 Lubrication Chart

WARNING

DO NOT USE CARBON TETRACHLORIDE.

If the grease in the bearings has become badly oxidized, it may be necessary to use alcohol (the type used for thinning shellac) to remove it. Ordinarily, by agitating the bearings in the cleaning solution, and using a stiff brush to remove the solid particles, the bearings can be satisfactorily cleaned. Do not handle the bearings with bare hands as deposits from the skin onto the bearings are inductive to corrosion. If the bearings are touched, the contamination can be removed by washing in alcohol. After the bearings have been thoroughly cleaned, spin them in clean new light machine oil until the cleaner or solvent is entirely removed. Allow this oil to drain off and then repack the bearings immediately with lubricant, being sure all metal parts are greased. Any removable seals should then be replaced.

CAUTION

If it becomes necessary to clean the bearings in alcohol (shellac thinner), be sure the alcohol is perfectly clean, and do not allow the bearings to remain in the alcohol more than a few hours. If it is desirable to leave the bearings in the alcohol for a longer time, an inhibited alcohol such as is used for anti-freeze should be used. Even then the bearings should be removed from the alcohol within twenty-four hours. Esso Anti-Freeze and Du Pont Zerone are satisfactory for this purpose. Precautions against the toxic effects of the alcohol must be exercised by wearing rubber gloves and by using the alcohol in a well ventilated room; excessive exposure to the fumes can be unpleasant to personnel. Washing the bearings in the light oil and draining should follow immediately, then apply the lubricant.

Bearings that are pressed into the frame or other members, such as the eccentric drive bearings contained in the motor support, should not be removed. After removing the shaft and inner race, the bearing can usually be cleaned satisfactorily with petroleum solvent or a similar cleaner and a stiff brush. Follow the procedure outlined above using a light machine oil and lubricant before reassembling the inner race and shaft.

ROLLING SURFACES

A number of rolling and rubbing surfaces in the mechanism have been lubricated with a baked-on, dry, molybdenum disulfide coating. This requires no maintenance and should last the life of the breaker.

TROUBLESHOOTING

Failure of a mechanism to operate properly will generally fall within three general classes; failure to trip, failure to close or latch closed, and failure of closing springs to recharge. The Troubleshooting Table shows particular types of problems that might be encountered, together with suggestions for remedying the trouble.

REPAIR AND REPLACEMENT

The following information covers in detail the proper method of removing various parts of the mechanism in order to make any necessary repairs. This section includes only those repairs that can be made at the installation on parts of the mechanism that are most subject to damage or wear.

CAUTION

Upon completion of any repair work, all mechanism adjustments must be checked. Refer to the section on INSTALLATION, paying particular attention to ADJUSTMENTS and FINAL INSPECTION.

MOTOR LIMIT SWITCHES

1. Remove the two mounting bolts (29, figure 5) from the switch support.
2. Remove the two mounting screws of the switches.
3. Disconnect the lead wires of the switch which is to be replaced.
4. Reassemble in the reverse order and check the switch adjustment as explained under ADJUSTMENTS.

TRIP LATCH CHECKING SWITCH

To remove the trip latch checking switch (22, figure 5) remove the two mounting screws and disconnect the lead wires. Reassemble in the reverse order and check the switch adjustments as explained under ADJUSTMENTS.

TRIP SHAFT AND LATCH

1. Remove the trip latch checking switch operating lever (5, figure 6).
2. Remove the cotter pins on both ends of the shaft.
3. Remove the set screw which is in the latch shaft.
4. Remove the trip crank adjustment bolt (40).
5. Place a block between the latch and the frame (either side) and drive the shaft until the latch is free of the key.
6. Remove the key and all burrs that may be raised around the keyway on the shaft.

7. Reassemble the parts in the reverse order. Be sure the trip latch spring (7, figure 6) is properly installed and the trip latch (8) is aligned in the center of the trip latch roller (41). Check the trip latch adjustment as described under ADJUSTMENTS.

TRIP LATCH ROLLER BEARING

1. Remove the two cotter pins at the ends of the shaft (27, figure 3).
2. Partially remove the shaft out the right side of the frame until the trip latch roller (26) is free.
3. Reassemble in the reverse order with the proper spacing of washers. Be sure the trip latch roller rotates freely.

TRIP COIL (TC)

To replace the potential trip coil (31, figure 6), proceed as follows:

1. With the breaker in the open position, remove the two mounting bolts which support the coil support bracket (29).
2. Remove the upper portion of the support bracket and remove the shims (30).

FAULT	CAUSE	REMEDY
Failure to trip.	Mechanism binding or sticking caused by lack of lubrication.	Lubricate complete mechanism.
	Mechanism binding or sticking caused by being out of adjustment.	Check all mechanism adjustments, latches, stops, auxiliary devices, etc., in accordance with section on ADJUSTMENTS. Examine latch and roller surfaces for corrosion. Clean as necessary.
	Damaged trip coil.	Replace coil after determining cause of failure.
	Blown fuse in trip circuit.	Replace blown fuse after determining cause of failure.
	Faulty connections in trip circuit.	Repair broken or loose wires and see that all binding screws are tight.
	Damaged or dirty contacts in trip circuit.	Recondition or replace contacts.
Failure to close or latch closed.	Mechanism binding or sticking caused by lack of lubrication.	Lubricate complete mechanism.
	Damaged or dirty contacts in control circuit.	Recondition or replace contacts.
	Blown fuse in closing circuit.	Replace blown fuse after determining cause of failure.
	Faulty connection in charging circuit.	Repair broken or loose wires and see that all binding screws are tight.
Failure of closing springs to recharge.	Driving motor inoperative due to lack of power	Check and replace fuses after determining cause of blown fuses.
	Driving motor inoperative due to an opened or shorted winding.	Replace motor after checking motor limit switches for proper setting and ratchet wheel and linkage for possible foreign objects causing jamming.

Table 3 Troubleshooting Table

3. Cut the trip coil wires at the butt connectors and remove the trip coil.

4. When replacing the trip coil, be sure to assemble the correct fiber spacers at the ends before securing the support bracket.

5. Adjust the trip coil location to allow 0.12 inch of trip coil plunger (34) free travel before the trip latch (8) starts to move.

6. Butt connect the wires and check the operation of the trip coil electrically and mechanically.

CLOSING COIL (CC)

To remove the closing coil (11, figure 5), proceed as follows:

1. Block the closing springs (22 and 57, figure 6) as described under INSTALLATION.

2. Remove the left-hand closing spring (22) as described in CLOSING SPRINGS.

3. Remove the two mounting bolts which fasten the closing coil support bracket (12, figure 5) to the mechanism frame and remove the shims above and below the closing coil.

4. Cut the closing coil wires at the butt connectors and remove the closing coil.

5. Replace the closing coil and the correct number of fiber spacers before fastening the support bracket to the mechanism frame.

6. Butt connect the wires and check that the closing coil plunger (13) is not binding. Check the closing coil for electrical operation.

CLOSING LATCH

1. Remove the cotter pins at both ends of the closing latch shaft (7, figure 5).

2. Remove the closing latch spring (15), and the closing latch monitoring switch operating lever (10).

3. Remove the set screws from the closing latch (6).

4. Move the closing latch shaft to the left (away from the frame) by tapping lightly on the inside end of the shaft. Rotate the shaft and continue tapping until the shaft is free. The shaft will push the outside needle bearing from its housing.

5. Reassemble in the reverse order putting the bearing into the frame last. Use a small piece of tubing or pipe when inserting the bearing to assure proper alignment of the bearing with its hole.

6. Check the latch adjustments as described under ADJUSTMENTS.

MOTOR SUPPORT

1. To remove the motor support (56, figure 6), first remove the closing latch spring (15, figure 5).

2. Remove the retaining ring which prevents the driving link from falling off the manual charging stud (53, figure 6).

3. Remove the driving link.

4. Remove the motor leads from the terminal board.

5. Remove the six 3/8 inch bolts (19, figure 6), from the bottom of the frame and three 3/8 inch bolts from right hand side of frame.

6. Remove the four mounting bolts from the motor (not shown).

7. Remove the retaining ring from between the motor and the motor support.

8. Remove the motor.

9. Reassemble all parts of the motor support in the reverse order and re-align it properly as described under DRIVING PAWL ADJUSTMENTS.

CAM

1. Remove the two set screws from the ratchet wheel (43, figure 6) and remove the wheel from the main shaft.

2. Remove the two set screws from the cam (4, figure 5).

3. Remove the prop reset spring (19).

4. Remove the two set screws (12, figure 3) from the cam and move the cam to the right on the shaft as far as it will go. Slide the cam shaft to the left until the key is fully exposed. Remove the key and check the shaft for burrs before removing the shaft from the frame.

5. Remove the shaft out the left side of the mechanism frame.

6. Reassemble in the reverse order using the correct number of washers and spacers to properly locate the parts.

7. Rotate the mechanism through a closing operation using the manual charging wrench. Check the location of the cam follower roller (11, figure 3), on the cam. If necessary, adjust the cam on the cam shaft to correct the alignment. Complete the closing operation and check the location of the cam follower roller shaft (10) on the prop (7). It should be approximately centered.

CLOSING SPRINGS

The closing springs (22 and 57, figure 6) can be removed as follows:

1. Charge the springs with the manual charging wrench and insert the spring blocking device pins (24) as described in INSTALLATION.

2. Discharge the springs by pushing the manual close button (48).

3. Rotate the cam shaft by using the manual charging wrench until the gap between the springs and the guide block is two inches or more.

4. Lift both springs until they clear the lower supports, then pull forward and down until the top supports are free.

5. Either open the operating mechanism by pushing the manual trip lever or block the breaker in the closed position with a suitable blocking device.

6. After reassembling the springs check the breaker stroke as described in the breaker instruction book.

REPLACEMENT PARTS

It is recommended that sufficient renewal parts be carried in stock to enable prompt replacement of worn, damaged or broken parts. A stock of such parts minimizes the service interruptions caused by breakdowns, and saves time and expense. When continuous operation is a primary consideration, more renewal parts should be carried, the amount depending upon the severity of the service and the time required to secure replacements.

Renewal parts may not always be identical to the original parts, since improvements are made from time to time. The parts which are furnished, however, will be interchangeable.

When ordering renewal parts, address the nearest Sales Office of Canadian General Electric Company Limited giving the complete data shown on the breaker nameplate, such as the serial number, type and rating of the breaker. The breaker nameplate is mounted on the inside of the front door of the operating mechanism compartment. Also furnish a complete description of each part, the quantity required, and, if possible, the number of the requisition on which the breaker was originally furnished.

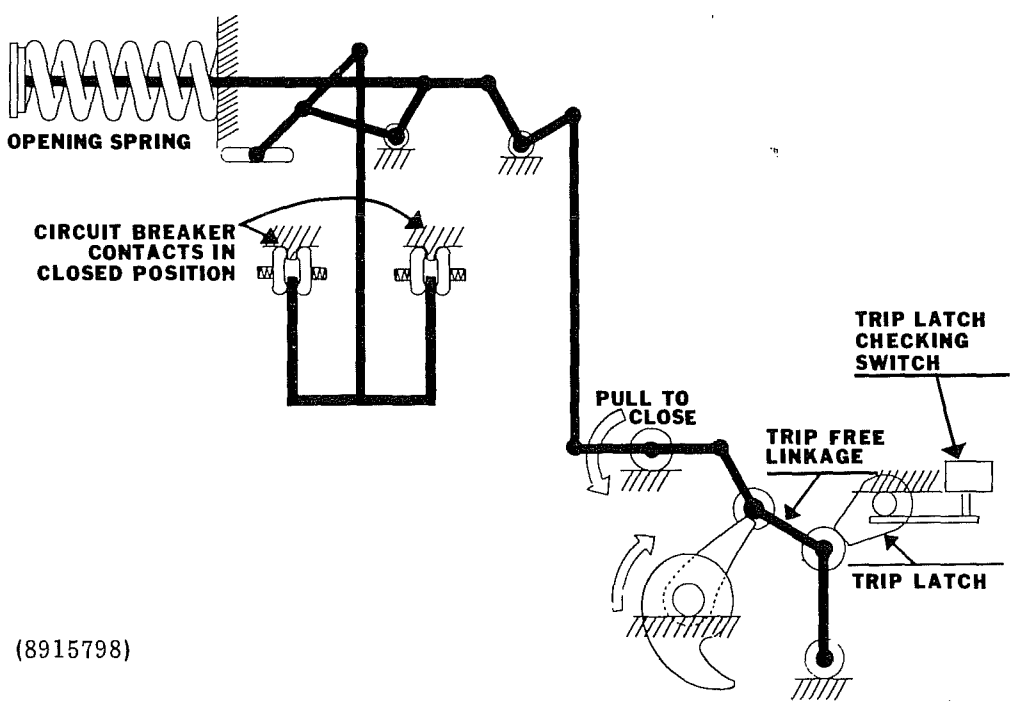

Figure 11 Linkage With Breaker In Closed Position

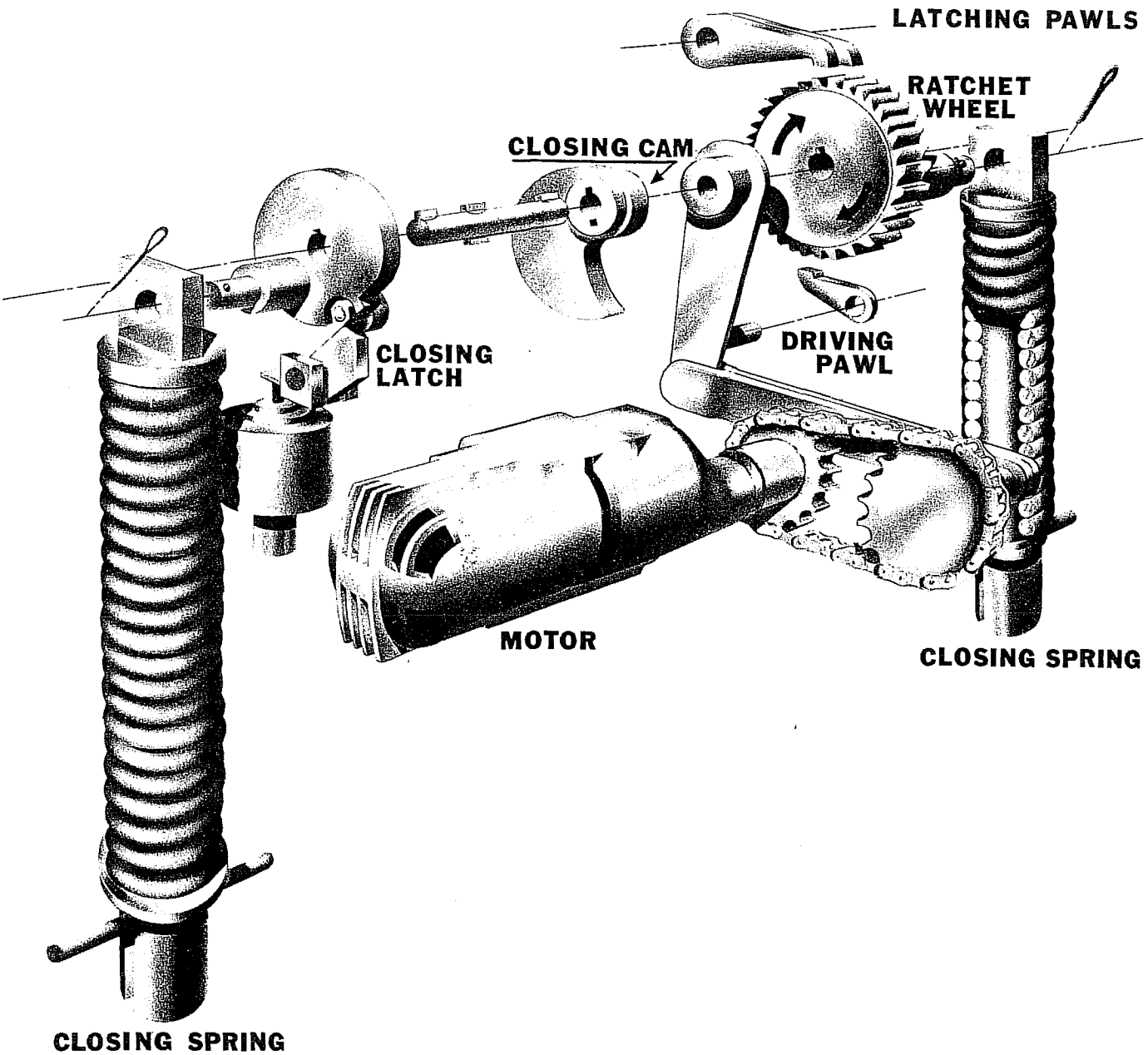

Figure 12 Pictorial Diagram Of ML-14 Mechanism

		ML-14 MECHANISM			
POSITION OF BREAKER	POSITION OF SPRING	MOTOR LIMIT SWITCHES	TRIP LATCH CHECKING SWITCH	CLOSING LATCH MONITORING SWITCH	MOTOR POSITION
CLOSED	CHARGED	⊣⊢ ⊣⊢ ⫽	⫽	⫽	STOPPED
GOING OPEN	CHARGED	⊣⊢ ⊣⊢ ⫽	⊣⊢	⫽	STOPPED
OPEN	CHARGED	⊣⊢ ⊣⊢ ⫽	⫽	⫽	STOPPED
GOING CLOSED	DIS-CHARGING	⫽ ⫽ ⊣⊢	⫽	⊣⊢	STOPPED
CLOSED	DIS-CHARGED	⫽ ⫽ ⊣⊢	⫽	⫽	RUNNING
GOING OPEN	DIS-CHARGED	⫽ ⫽ ⊣⊢	⊣⊢	⫽	RUNNING
* OPEN	DIS-CHARGED	⫽ ⫽ ⊣⊢	⫽	⫽	RUNNING
OPEN	CHARGING	7 ⫽ 8 9 ⫽ 10 11 ⊣⊢ 12	⫽	⫽	RUNNING
C.G.E. DESIGNATION		52YX 44 52/SCO	52/LC(T)	52/LC(C)	
G.E. DESIGNATION		SM/LS	LC	CL/MS	

44 - Motor cut-off switch, opens when spring is charged.

52YX - 52Y time delay switch, closes when spring discharges, opens when spring is charged.

52/SCO - 52/CC blocking switch, opens when spring discharges, closes when spring is charged.

52/LC(T) - Prevents closing of breaker if trip latch is not in latching position.

52/LC(C) - Motor starting switch, motor cannot charge closing spring unless latch is in latching position.

* Electrical Diagrams drawn in this position.

Table 4 Mechanical Position Of Switches

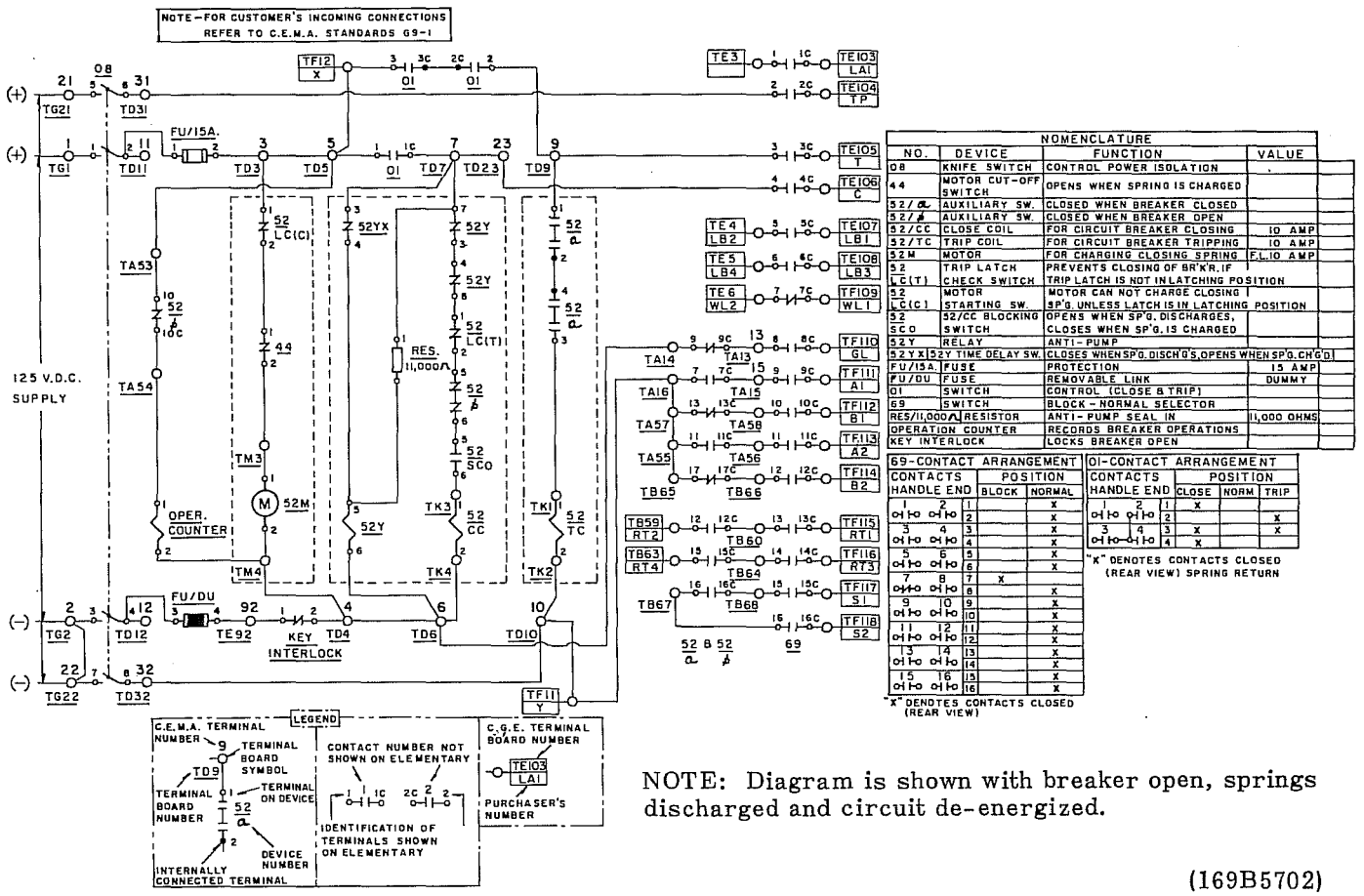

NOMENCLATURE			
NO.	DEVICE	FUNCTION	VALUE
08	KNIFE SWITCH	CONTROL POWER ISOLATION	
44	MOTOR CUT-OFF SWITCH	OPENS WHEN SPRING IS CHARGED	
52/a	AUXILIARY SW.	CLOSED WHEN BREAKER CLOSED	
52/b	AUXILIARY SW.	CLOSED WHEN BREAKER OPEN	
52/CC	CLOSE COIL	FOR CIRCUIT BREAKER CLOSING	10 AMP
52/TC	TRIP COIL	FOR CIRCUIT BREAKER TRIPPING	10 AMP
52M	MOTOR	FOR CHARGING CLOSING SPRING	F.L.10 AMP
52 LC(T)	TRIP LATCH CHECK SWITCH	PREVENTS CLOSING OF BR'K'R. IF TRIP LATCH IS NOT IN LATCHING POSITION	
52 LC(C)	MOTOR STARTING SW.	MOTOR CAN NOT CHARGE CLOSING SP'G. UNLESS LATCH IS IN LATCHING POSITION	
52 SCO	52/CC BLOCKING SWITCH	OPENS WHEN SP'G. DISCHARGES, CLOSES WHEN SP'G. IS CHARGED	
52Y	RELAY	ANTI-PUMP	
52YX	52Y TIME DELAY SW.	CLOSES WHEN SP'G. DISCH'G'S, OPENS WHEN SP'G. CH'G'D	
FU/15A.	FUSE	PROTECTION	15 AMP
FU/DU	FUSE	REMOVABLE LINK	DUMMY
01	SWITCH	CONTROL (CLOSE & TRIP)	
69	SWITCH	BLOCK - NORMAL SELECTOR	
RES/11,000Ω	RESISTOR	ANTI-PUMP SEAL IN	11,000 OHMS
OPERATION COUNTER		RECORDS BREAKER OPERATIONS	
KEY INTERLOCK		LOCKS BREAKER OPEN	

69-CONTACT ARRANGEMENT

CONTACTS HANDLE END		POSITION BLOCK	NORMAL
1	2	1	X
		2	
3	4	3	X
		4	
5	6	5	X
		6	X
7	8	7	X
		8	
9	10	9	X
		10	X
11	12	11	X
		12	X
13	14	13	X
		14	X
15	16	15	X
		16	X

"X" DENOTES CONTACTS CLOSED (REAR VIEW)

01-CONTACT ARRANGEMENT

CONTACTS HANDLE END		POSITION CLOSE	NORM	TRIP
1	2	1	X	
		2		X
3	4	3	X	
		4	X	

"X" DENOTES CONTACTS CLOSED (REAR VIEW) SPRING RETURN

NOTE: Diagram is shown with breaker open, springs discharged and circuit de-energized.

(169B5702)

Figure 13 Schematic Diagram Of ML-14 Mechanism

POWER DELIVERY
DEPARTMENT
PETERBOROUGH — ONTARIO

CANADIAN GENERAL ELECTRIC

FACILITIES INSTRUCTIONS,
STANDARDS AND TECHNIQUES
VOLUME 3-16

MAINTENANCE OF POWER CIRCUIT BREAKERS

Internet Version of This Manual Created
December 1999

HYDROELECTRIC RESEARCH AND
TECHNICAL SERVICES GROUP

The Appearance of the Internet Version of This
Manual May differ From the Original, but the Contents Do Not

UNITED STATES DEPARTMENT OF THE INTERIOR
BUREAU OF RECLAMATION
DENVER, COLORADO

Maintenance of Power Circuit Breakers
Volume 3-16

CONTENTS

Section . . . . . Page

1. Importance of adequate maintenance 1
2. Maintenance of molded case circuit breakers 1
2.1. Frequency of maintenance 1
2.2. Routine maintenance tests 1

3. Maintenance of low-voltage circuit breakers 2
3.1. Frequency of maintenance 2
3.2. Maintenance procedures 2

4. Maintenance of medium-voltage circuit breakers 3
4.1. Frequency of maintenance 3
4.2. Safety practices 3
4.3. Maintenance procedures for medium-voltage air circuit breakers 3

4.4. Maintenance procedures for medium-voltage oil circuit breakers 4

4.5. Maintenance procedures for medium-voltage vacuum circuit breakers 4

5. Maintenance of high-voltage circuit breakers 5
5,1. Frequency of inspections 5
5.2. External inspection guidelines 6
5.3. Internal inspection guidelines 8
5.4. Typical internal breaker problems 8
5.5. Influence of duty imposed 9

6. Maintenance of SF6 gas circuit breakers 10
6.1. Properties of SF_6 (sulfur hexafluoride) gas 10
6.2. Handling nonfaulted SF_6 11
6.3. Handling faulted SF_6 11

SECTION I - IMPORTANCE OF ADEQUATE MAINTENANCE

The maintenance of circuit breakers deserves special consideration because of their importance for routine switching and for protection of other equipment. Electric transmission system breakups and equipment destruction can occur if a circuit breaker fails to operate because of a lack of preventive maintenance. The need for maintenance of circuit breakers is often not obvious as circuit breakers may remain idle, either open or closed, for long periods of time. Breakers that remain idle for 6 months or more should be made to open and close several times in succession to verify proper operation and remove any accumulation of dust or foreign material on moving parts and contacts.

SECTION 2 - MAINTENANCE OF MOLDED CASE CIRCUIT BREAKERS

2.1. FREQUENCY OF MAINTENANCE.- Molded case circuit breakers are designed to require little or no routine maintenance throughout their normal lifetime. Therefore, the need for preventive maintenance will vary depending on operating conditions. As an accumulation of dust on the latch surfaces may affect the operation of the breaker, molded case circuit breakers should be exercised at least once per year. Routine trip testing should be performed every 3 to 5 years.

2.2. ROUTINE MAINTENANCE TESTS.- Routine maintenance tests enable personnel to determine if breakers are able to perform their basic circuit protective functions. The following tests may be performed during routine maintenance and are aimed at assuring that the breakers are functionally operable. The following tests are to be made only on breakers and equipment that are deenergized.

2.2.1. Insulation resistance test.- A megohmmeter may be used to make tests between phases of opposite polarity and from current-carrying parts of the circuit breaker to ground. A test should also be made between the line and load terminals with the breaker in the open position. Load and line conductors should be disconnected from the breaker under insulation resistance tests to prevent test mesurements from also showing resistance of the attached circuit. Resistance values below 1 megohm are considered unsafe and the breaker should be inspected for possible contamination on its surfaces.

2.2.2. Millivolt drop test.- A millivolt drop test can disclose several abnormal conditions inside a breaker such as eroded contacts, contaminated contacts, or loose internal connections. The millivolt drop test should be made at a nominal direct-current voltage at 50 amperes or 100 amperes for large breakers, and at or below rating for smaller breakers. The millivolt drop is compared against manufacturer's data for the breaker being tested.

2.2.3. Connections test.- The connections to the circuit breaker should be inspected to determine that a good joint is present and that overheating is not occurring. If overheating is indicated by discoloration or signs of arcing, the connections should be removed and the connecting surfaces cleaned.

2.2.4. Overload tripping test.- The proper action of the overload tripping components of the circuit breaker can be verified by applying 300 percent of

the breaker rated continuous current to each pole. The significant part of this test is the automatic opening of the circuit breaker and not tripping times as these can be greatly affected by ambient conditions and test conditions.

2.2.5. Mechanical operation.- The mechanical operation of the breaker should be checked by turning the breaker on and off several times.

SECTION 3 - MAINTENANCE OF LOW-VOLTAGE CIRCUIT BREAKERS

3.1. FREQUENCY OF MAINTENANCE.- Low-voltage circuit breakers operating at 600 volts alternating current and below should be inspected and maintained very 1 to 3 years, depending on their service and operating conditions. Conditions that make frequency maintenance and inspection necessary are:

a. High humidity and high ambient temperature.

b. Dusty or dirty atmosphere.

c. Corrosive atmosphere.

d. Frequent switching operations.

e. Frequent fault operations.

f. Older equipment.

A breaker should be inspected and maintained if necessary whenever it has interrupted current at or near its rated capacity.

3.2. MAINTENANCE PROCEDURES. - Manufacturer's instructions for each circuit breaker should be carefully read and followed. The following are general procedures that should be followed in the maintenance of low-voltage air circuit breakers:

a. An initial check of the breaker should be made in the TEST position prior to withdrawing it from to enclosure.

b. Insulating parts, including bushings, should be wiped clean of dust and smoke.

c. The alignment and condition of the movable and stationary contacts should be checked and adjusted according to the manufacturer's instruction book.

d. Check arc chutes and replaces any damaged parts.

e. Inspect breaker operating mechanism for loose hardware and missing or broken cotter pins, etc. Examine cam, latch, and roller surfaces for damage or wear.

f. Clean and relubricate operating mechanism with a light machine oil (SAE-20 or 30) for pins and bearings and with a nonhardening grease for the wearing surfaces of cams, rollers, etc.

g. Set breaker operating mechanism adjustments as described in the manufacturer's instruction book. If these adjustments cannot be made within the specified tolerances, it may indicate excessive wear and the need for a complete overhaul.

h. Replace contacts if badly worn or burned and check control device for freedom of operation.

(FIST 3-16 1/92)

l. Inspect wiring connections for tightness.

j. Check after servicing circuit breaker to verify the contacts move to the fully opened and fully closed positions, that there is an absence of friction or binding, and that electrical operation is functional.

SECTION 4 - MAINTENANCE OF MEDIUM-VOLTAGE CIRCUIT BREAKERS

4.1. FREQUENCY OF MAINTENANCE.- Medium-voltage circuit breakers which operate in the range of 600 to 15,000 volts should be inspected and maintained annually or after every 2,000 operations, whichever comes first. The above maintenance schedule is recommended by the applicable standards to achieve required performance from the breakers.

4.2. SAFETY PRACTICES.- Maintenance procedures include the safety practices indicated in the ROMSS (Reclamation Operation & Maintenance Safety Standards) and following points that require special attention.

a. Be sure the circuit breaker and its mechanism are disconnected from all electric power, both high voltage and control voltage, before it is inspected or repaired.

b. Exhaust the pressure from air receiver of any compressed air circuit breaker before it is inspected or repaired.

c. After the circuit breaker has been disconnected from the electrical power, attach the grounding leads properly before touching any of the circuit breaker parts.

d. Do no lay tools down on the equipment while working on it as they may be forgotten when the equipment is placed back in service.

4.3. MAINTENANCE PROCEDURES FOR MEDIUM-VOLTAGE AIR CIRCUIT BREAKERS.- The following suggestions are for use in conjunction with manufacturer's instruction books for the maintenance of medium-voltage air circuit breakers:

a. Clean the insulating parts including the bushings.

b. Check the alignment and condition of movable and stationary contacts and adjust them per the manufacturer's data.

c. See that bolts, nuts, washers, cotter pins, and all terminal connections are in place and tight.

d. Check arc chutes for damage and replace damaged parts.

e. Clean and lubricate the operating mechanism and adjust it as described in the instruction book. If the operating mechanism cannot be brought into specified tolerances, it will usually indicate excessive wear and the need for a complete overhaul.

f. Check, after servicing, circuit breaker to verify that contacts move to the fully opened and fully closed positions, that there is an absence of friction or binding, and that electrical operation is functional.

(FIST 3-16 1/92)

4.4. MAINTENANCE PROCEDURES FOR MEDIUM-VOLTAGE OIL CIRCUIT BREAKERS.- The following suggestions are for use in conjunction with the manufacturer's instruction books for the maintenance of medium-voltage oil circuit breakers:

a. Check the condition, alignment, and adjustment of the contacts.

b. Thoroughly clean the tank and other parts which have been in contact with the oil.

c. Test the dielectric strength of the oil and filter or replace the oil if the dielectric strength is less than 22 kV. The oil should be filtered or replaced whenever a visual inspection shows an excessive amount of carbon, even if the dielectric strength is satisfactory.

d. Check breaker and operating mechanisms for loose hardware and missing or broken cotter pins, retaining rings, etc.

e. Adjust breaker as indicated in instruction book.

f. Clean and lubricate operating mechanism.

g. Before replacing the tank, check to see there is no friction or binding that would hinder the breaker's operation. Also check the electrical operation. Avoid operating the breaker any more than necessary without oil in the tank as it is designed to operate in oil and mechanical damage can result from excessive operation without it.

h. When replacing the tank and refilling it with oil, be sure the gaskets are undamaged and all nuts and valves are tightened properly to prevent leakage.

4.5. MAINTENANCE PROCEDURES FOR MEDIUM-VOLTAGE VACUUM CIRCUIT BREAKERS.- Direct inspection of the primary contacts is not possible as they are enclosed in vacuum containers. The operating mechanisms are similar to the breakers discussed earlier and may be maintained in the same manner. The following two maintenance checks are suggested for the primary contacts:

a. Measuring the change in external shaft position after a period of use can indicate extent of contact erosion. Consult the manufacturer's instruction book.

b. Condition of the vacuum can be checked by a hi-pot test. Consult the manufacturer's instruction book.

SECTION 5 - MAINTENANCE OF HIGH-VOLTAGE CIRCUIT BREAKERS

5.1. FREQUENCY OF INSPECTIONS.- Most manufacturers recommend complate inspections, external and internal, at intervals of from 6 to 12 months. Experience has shown that a considerable expense is involved, some of which may be unnecessary, in adhering to the manufacturer's recommendations of internal inspections at 6- to 12-month intervals. With proper external checks, part of the expense, delay, and labor of internal inspections may be avoided without sacrifice of dependability.

5.1.1. Inspection schedule for new breakers.- A temporary schedule of frequent inspections is necessary after the erection of new equipment,

the modification or modernization of old equipment, or the replication of old equipment under different conditions. The temporary schedule is required to Correct internal defects which ordinarily appear in the first year of service and to correlate external check procedures with internal conditions as a basis for more conservative maintenance program thereafter. Assuming that a circuit breaker shows no serious defects at the early complete inspections and no heavy interrupting duty is imposed, the following inspection schedule is recommended:

6 months after erection	Complete inspection and adjustment
12 months after previous inspection	Complete inspection and adjustment
12 months after previous inspection	Complete inspection and adjustment
12 months after previous inspection	External checks and inspection; if checks are satisfactory, no internal inspection
12 months after previous inspection	Complete inspection and adjustment

5.1.2. Inspection schedule for existing breakers.- The inspection schedule should be based by the interrupting duty imposed on the breaker. It is advisable to make a complete internal inspection after the first severe fault interruption. If internal conditions are satisfactory, progressively more fault interruptions may be allowed before an internal inspection is made. Average experience indicates that up to five fault interruptions are allowable between inspections on 230 kV and above circuit breakers, and up to 10 fault interruptions are allowable on circuit breakers rated under 230 kV. Normally, no more than 2 years should elapse between external inspections or 4 years between internal inspections.

5.2. EXTERNAL INSPECTION GUIDELINES.- The following items should be included in an external inspection of a high-voltage breaker.

a. Visually inspect PCB externals and operating mechanism. The tripping latches should be examined with special care since small errors in adjustments and clearances and roughness of the latching surfaces may cause the breaker to fail to latch properly or increase the force necessary to trip the breaker to such an extent that electrical tripping will not always be successful, especially if the tripping voltage is low. Excessive "opening" spring pressure can cause excessive friction at the tripping latch and should be avoided. Also, some extra pressure against the tripping latch may be caused by the electromagnetic forces due to flow of heavy short-circuit currents through the breaker. Lubrication of the bearing surfaces of the operating mechanism should be made as recommended in the manufacturer's instruction book, but excessive lubrication should be avoided as oily surfaces collect dust and grit and get stiff in cold weather, resulting in excessive friction.

b. Check oil dielectric strength and color for oil breakers. The dielectric strength must be maintained to pre
vent internal breakdown under voltage surges and to enable the interrupter to function properly since its action

(FIST 3-16 1/92)

depends upon changing the internal arc path from a fair conductor to a good insulator in the short interval while the current is passing through zero. Manufacturer's instructions state the lowest allowable dielectric strength for the various circuit breakers. It is advisable to maintain the dielectric strength above 20 kV even though some manufacturer's instructions allow 16 kV. Detailed instructions for oil testing are found in FIST Volume 3-5.

If the oil is carbonized, filtering may remove the suspended particles, but the interrupters, bushings, etc., must be wiped clean. If the dielectric strength is lowered by moisture, an inspection of the fiber and wood parts is advisable and the source of the moisture should be corrected. For these reasons, it is rarely worthwhile to filter the oil in a circuit breaker while it is in service.

c. Observe breaker operation under load.

d. Operate breaker manually and electrically and observe for malfunction. The presence of excessive friction in the tripping mechanism and the margin of safety in the tripping function should be determined by making a test of the minimum voltage required to trip the breaker. This can be accomplished by connecting a switch and rheostat in series in the trip-coil circuit at the breaker (across the terminals to the remote control switch) and a voltmeter across the trip coil. Staring with not over 50 percent of rated trip-coil voltage, gradually increase the voltage until the trip-coil plunger picks up and successfully trips the breaker and record the minimum tripping voltage. Most breakers should trip at about 56 percent of rated trip-coil voltage. The trip-coil resistance should be measured and compared with the factor test value to disclose shorted turns.

Most modern breakers have trip coils which will overheat or burn out if left energized for more than a short period. An auxiliary switch is used in series with the coil to open the circuit as soon as the breaker has closed. The auxiliary switch must be properly adjusted and successfully break the arc without damage to the contacts.

Tests should also be made to determine the minimum voltage which will close the breaker and the closing coil resistance.

e. Trip breaker from protective relays.

f. Check operating mechanism adjustments. Measurements of the mechanical clearances of the operating mechanism associated with the tank or pole should be made. Appreciable variation between the value found and the setting when erected or after the last maintenance overhaul is erected or after the last maintenance overhaul is usually an indication of mechanical trouble. Temperature and difference of temperature between different parts of the mechanism effect the clearances some. The manufacturers' recommended tolerances usually allow for these effects.

g. Doble test bushings and breaker.

(FIST 3-16 1/92)

Table I - Maximum Contact Resistance

Air circuit breakers			Oil circuit breakers		
kV	**Amperes**	**Microhms**	**kV**	**Amperes**	**Microhms**
5-15	600	100	7.2-15	600	300
	1200	50		1200	150
	2000	50		2000	75
				4000	40
			23-24	All	500
			46	All	700
			69	600	500
				1200	500
				2000	100
			115-230	All	800

h. Measure contact resistance. As long as no foreign material is present, the contact resistance of high-pressure, butt-type contacts is practically independent of surface condition. Nevertheless, measurement of the electrical resistance between external bushing terminals of each pole may be regarded as the final "proof of the pudding." Any abnormal increase in the resistance of this circuit may be an indication of foreign material in contacts, contact loose in support, loose jumper, or loose bushing connection. Any one of these may cause localized heating and deterioration. The amount of heat above normal may be readily calculated from the increase in resistance and the current.

Resistance of the main contact circuits can be most conveniently measured with a portable double bridge (Kelvin) or a "Ducter." The breaker contacts should not be opened during this test because of possible damage to the test equipment.

Table 1 gives maximum contact resistances for typical classes of breakers.

I. Make time-travel or motion-analyzer records. Circuit breaker motion analyzers are portable devices designed to monitor the operation of power circuit breakers which permit mechanical coupling of the motion analyzer to the circuit breaker operating rod. These include high-voltage and extra- high-voltage dead tank and SF_6 breakers and low-voltage air and vacuum circuit breakers. Motion analyzers can provide graphic records of close or open initiation signals, contact closing or opening time with respect to initiation signals, contact movement and velocity, and contact bounce or rebound. The records obtained not only indicated when mechanical difficulties are present but also help isolate the cause of the difficulties. It is preferable to obtain a motion-analyzer record on a breaker when it is first installed. This will provide a master record which can be filed and used for comparison with future maintenance checks. Tripping and closing voltages should be recorded on the master record so subsequent tests can be performed under comparable conditions.

(FIST 3-16 1/92)

Time-travel records are taken on the pole nearest the operating mechanism to avoid the inconsistencies due to linkage vibration and slack in the remote phases.

5.3. INTERNAL INSPECTION GUIDELINES.- An internal inspection should include all items listed for an external inspection, plus the breaker tanks or contact heads should be opened and the contacts nd interrupting parts should be inspected. These guidelines are not intended to be a complete list of breaker maintenance but are intended to provide an idea of the scope of each inspection.

A specific checklist should be developed in the field for each type of inspection for each circuit breaker maintained.

5.4. TYPICAL INTERNAL BREAKER PROBLEMS.- The following difficulties should be looked for during internal breaker inspections:

a. Tendency for keys, bolts (especially fiber), cotter pins, etc, to come loose.

b. Tendency for wood operating rods, supports, or guides to come loose from clamps or mountings.

c. Tendency for carbon or sludge to form and accumulate in interrupter or on bushings.

d. Tendency for interrupter to flash over and rupture static shield or resistor.

e. Tendency for interrupter parts or barriers to burn or erode.

f. Tendency for bushing gaskets to leak moisture into breaker insulating material.

Fortunately, these difficulties are most likely to appear early in the use of a breaker and would be disclosed by the early internal inspections. As unsatisfactory internal conditions are corrected and after one or two inspections show the internal conditions to be satisfactory, the frequency of internal inspections may safely be decreased.

5.5. INFLUENCE OF DUTY IMPOSED.-

5.5.1. Influence of light duty.- Internal inspection of a circuit breaker which has had no interruption duty or switching since the previous inspection will not be particularly beneficial although it will not be a total loss. If the breaker has been energized, but open, erosion in the form or irregular grooves (called tracking) on the inner surface of the interrupter or shields may appear due to electrostatic charging current. This is usually aggravated by a deposit of carbon sludge which has previously been generated by some interrupting operation. If the breaker has remained closed and carrying current, evidence of heating of the contacts may be found if the contact surfaces were not clean, have oxidized, or if the contact pressure was improper. Any shrinkage and loosening of wood or fiber parts (due to loss of absorbed moisture into the dry oil) will take place following erection, whether the breaker is operated or not. Mechanical operation, however, will make any loosening more evident. It is worthwhile to deliberately impose several switching operations on the breaker before inspection if possible. If this is impossible, some additional

information may be gained by operating the breaker several times after it is deenergized, measuring the contact resistance of each pole initially and after each operation.

5.5.2. Influence of normal duty.- The relative severity of duty imposed by load switching, line dropping, and fault interruptions depends upon the type of circuit breaker involved. In circuit breakers which employ an oil blast generated by the power arc, the interruption of light faults or the interruption of line charging current may cause more deterioration than the interruption of heavy faults within the rating of the breaker because of low oil pressure. In some designs using this basic principle of interruption, distress at light interrupting duty is minimized by multiple breaks, rapid contact travel, and turbulence of the oil caused by movement of the contact and mechanism. In designs employing a mechanically driven piston to supplement the arc-driven oil blast, the performance is more uniform. Still more uniform performance is usually yielded by designs which depend for arc interruption upon an oil blast driven by mechanical means. In the latter types, erosion of the contacts may appear only with heavy interruptions. The mechanical stresses which accompany heavy interruptions are always more severe.

These variations of characteristic performance among various designs must be considered when judging the need for maintenance from the service records and when judging the performance of a breaker from evidence on inspection. Because of these variations, the practice of evaluating each fault interruption as equivalent to 100 no-load operations, employed by some companies, is necessarily very approximate although it may be a useful guide in the absence of any other information.

5.5.3. Influence of severe duty.- Erosion of the contacts and damage from severe mechanical stresses may occur during large fault interruption. The most reliable indication of the stress to which a circuit breaker is subjected during fault interruptions is afforded by automatic oscillograph records. Deterioration of the circuit breaker may be assumed to be proportional to the energy dissipated in the breaker during the interruption. The energy dissipated is approximately proportional to the current and the duration of arcing; that is, the time from parting of the contacts to interruption of the current. However, the parting of contacts is not always evident on the oscillograms, and it is sometimes necessary to determine this from indicated relay time and the known time for breaker contacts to part. Where automatic oscillograph records are available, they may be as useful in guiding oil circuit breaker maintenance as in showing relay and system performance.

Where automatic oscillographs are not available, a very approximate, but nevertheless useful, indication of fault duty imposed on the circuit breakers may be obtained from relay operation targets and accompanying system conditions. All such data should be tabulated in the circuit breaker maintenance file.

(FIST 3-16 1/92)

SECTION 6 - MAINTENANCE OF SF_6 GAS CIRCUIT BREAKERS

6.1. PROPERTIES OF SF_6 (SULFUR HEXAFLUORIDE) GAS. -

a. Toxicity.- SF_6 is odorless, colorless, tasteless, and nontoxic in its pure state. It can, however, exclude oxygen and cause suffocation. If the normal oxygen content of air is reduced from 21 percent to less than 13 percent, suffocation can occur without warning. Therefore, circuit breaker tanks should be purged out after opening.

b. Toxicity of arc products.- Toxic decomposition products are formed when SF_6 gas is subjected to an electric arc. The decomposition products are metal fluorides and form a white or tan powder. Toxic gases are also formed which have the characteristic odor of rotten eggs. Do not breathe the vapors remaining in a circuit breaker where arcing or corona discharges have occurred in the gas. Evacuate the faulted SF_6 gas from the circuit breaker and flush with fresh air before working on the circuit breaker.

c. Physical properties.- SF_6 is one of the heaviest known gases with a density about five times the density of air under similar conditions. SF_6 shows little change in vapor pressure over a wide temperature range and is a soft gas in that it is more compressible dynamically than air. The heat transfer coefficient of SF_6 is greater than air and its cooling characteristics by convection are about 1.6 times air.

d. Dielectric strength.- SF_6 has a dielectric strength about three times that of air at one atmosphere pressure for a given electrode spacing. The dielectric strength increases with increasing pressure; and at three atmospheres, the dielectric strength is roughly equivalent to transformer oil. The heaters for SF_6 in circuit breakers are required to keep the gas from liquefying because, as the gas liquifies, the pressure drops, lowering the dielectric strength. The exact dielectric strength, as compared to air, varies with electrical configuration, electrode spacing, and electrode configuration.

e. Arc quenching.- SF_6 is approximately 100 times more effective than air in quenching spurious arcing. SF_6 also has a high thermal heat capacity that can absorb the energy of the arc without much of a temperature rise.

f. Electrical arc breakdown.- Because of the arc-quenching ability of SF_6, corona and arcing in SF_6 does not occur until way past the voltage level of onset of corona and arcing in air. SF_6 will slowly decompose when exposed to continuous corona.

All SF_6 breakdown or arc products are toxic. Normal circuit breaker operation produces small quantities of arc products during current interruption which normally recombine to SF_6. Arc products which do not recombine, or which combine with any oxygen or moisture present, are normally removed by the molecular sieve filter material within the circuit breaker.

6.2. HANDLING NONFAULTED SF_6. The procedures for handling nonfaulted SF_6 are well covered in manufacturers'

(FIST 3-16 1/92)

instruction books. These procedures normally consist of removing the SF_6 from the circuit breaker, filtering and storing it in a gas cart as a liquid, and transferring it back to the circuit breaker after the circuit breaker maintenance has been performed. No special dress or precautions are required when handling nonfaulted SF_6.

6.3. HANDLING FAULTED SF_6.-

6.3.1 Toxicity.-

a. Faulted SF_6 gas.- Faulted SF_6 gas smells like rotten eggs and can cause nausea and minor irritation of the eyes and upper respiratory tract. Normally, faulted SF_6 gas is so foul smelling no one can stand exposure long enough at a concentration high enough to cause permanent damage.

b. Solid arc products.- Solid arc products are toxic and are a white or off-white, ashlike powder. Contact with the skin may cause an irritation or possible painful fluoride burn. If solid arc products come in contact with the skin, wash immediately with a large amount of water. If water is not available, vacuum off arc products with a vacuum cleaner.

6.3.2 Clothing and safety equipment requirements.- When handling and removing solid arc products from faulted SF_6, the following clothing and safety equipment should be worn:

a. Coveralls.- Coveralls must be worn when removing solid arc products. Coveralls are not required after all solid arc products are cleaned up. Disposable coveralls are recommended for use when removing solid arc products; however, regular coveralls can be worn if disposable ones are not available, provided they are washed at the end of each day.

b. Hoods.- Hoods must be worn when removing solid arc products from inside a faulted dead-tank circuit breaker.

c. Gloves.- Gloves must be worn when solid arc products are hahdied. Inexpensive, disposable gloves are recommended. Nondisposable gloves must be washed in water and allowed to drip-dry after use.

d. Boots.- Slip-on boots, nondisposable or plastic disposable, must be worn by employees who enter eternally faulted dead-tank circuit breakers. Slip-on boots are not required after the removal of solid arc products and vacuuming. Nondisposable boots must be washed in water and dried after use.

e. Safety glasses.- Safety glasses are recommended when handling solid arc products if a full face respirator is not worn.

f. Respirator.- A cartridge, dust-type respirator is required when entering an internally faulted dead-tank circuit breaker. The respirator will remove solid arc products from air breathed, but it does not supply oxygen so it must only be used when there is sufficient oxygen to support life.

(FIST 3-16 1/92)

The filter and cartridge should be changed when an odor is sensed through the respirator. The use of respirators is optional for work on circuit breakers whose interrupter units are not large enough for a man to enter and the units are well ventilated.

Air-line-type respirators should be used when the cartridge type is ineffective due to providing too short a work time before the cartridge becomes contaminated and an odor is sensed.

When an air-line respirator is used, a minimum of two working respirators must be available on the job before any employee is allowed to enter the circuit breaker tank.

6.3.3 Disposal of waste.- All materials used in the cleanup operation for large quantities of SF_6 arc products shall be placed in a 55-gal drum and disposed of as hazardous waste. The following items should be disposed of:

a. All solid arc products

b. All disposable protective clothing

c. All cleaning rags

d. Filters from respirators

e. Molecular sieve from breaker and gas cart

f. Vacuum filter element.

(FIST 3-16 1/92)

REFERENCE
CONTACTS

Created by: M. Rideout
Revised by: B. Ropson, M. Murphy
Reviewed by: G. Samms
Approved by: G. Samms

MSR004-1: Contact Condition

The following descriptions are used for reporting contact condition:

Good - Does not require dressing.

Fair - Requires dressing and possibility of replacing at next Maintenance IV.

Bad - Change immediately or as soon as possible.

Note: Replace badly pitted or burned contacts before they are burned away sufficiently to cause damage to other parts of the apparatus. If arcing contact surfaces are roughened, they should be smoothed down by filing.

MSR004-2: Contact Resistance Table (Maximum Allowable Values)[1]

	Voltage Rating	Ampere Rating	Resistance (micro-ohms)
Oil Circuit Breakers	5-15 kV	600 A	300
		1200 A	150
		2000 A	75
		4000 A	40
	23-24 kV	All	500
	46 kV	All	700
	69 kV	600 A	500
		1200 A	500
		2000 A	100
	115-230 kV	All	800
Air Circuit Breakers	5-15 kV	600 A	100
		1200 A	50
		2000 A	50
SF_6 Gas Breakers	15-25 kV	All	200[2]
	69 kV	1200 A	135
		2000 A	120
	138 kV	All	240

Note: The contact resistance does change with contact wipe. Increased wipe may bring the ductor readings below tolerance without having to change the contacts. Be careful not to increase wipe beyond the maximum specifications provided in the manufacturers instructions.

[1] Table adapted from U.S. Department of the Interior Bureau of Reclamation Hydroelectric Research and Technical Services Group Facilities Instructions, Standards and Techniques Volume 3-16, Maintenance of Power Circuit Breakers, Dec. 1999. Available at http://www.usbr.gov/power/data/fist/fist3_16/fist3-16.pdf

[2] No absolute maximum value available - manual simply says “compare to factory test results” which were all around 100 μΩ at the time of manufacture

REFERENCE
EQUIPMENT ID NUMBERING

Created by: M. Rideout
Revised by: B. Ropson
Reviewed by: G. Samms
Approved by: G. Samms

MSR005-1: General

The following is a description of the system used to issue and control ID numbers.

An ID number consists of a six digit number. The first two digits identify the type of equipment and the last four digits indicate the unit number. A list of equipment type numbers assigned is given later in this bulletin. The numbering scheme is essential for establishing a computerized record system.

The following illustration indicates the function of each digit in the complete ID number:

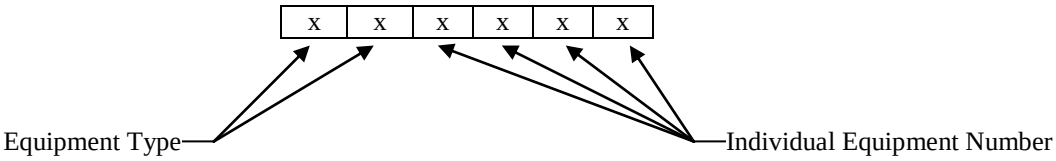

Examples: 210299 – Circuit breaker No. 299
201299 – Power transformer No. 1299

ID numbers are assigned to all equipment. For certain types of equipment, the number is assigned and recorded only. It is not installed on such equipment because of difficulties encountered with the actual installation and the fact that there is no other real advantage besides the requirement of record keeping.

When such existing equipment without an ID number is removed from service (e.g. for repairs, for relocation or for storage) the ID number is installed at that time.

New equipment, purchased in the future, may have the ID number stamped on the nameplate; this can be arranged with the manufacturer and will take the place of our own reflective numerals in cases where they are difficult to install.

In cases where the Standard Procedures indicate that an ID number is to be assigned and installed, the number is assigned but actually installed only on equipment as stated in this bulletin.

Whenever a number is assigned to a piece of equipment, the Substation Asset Management Group should be informed and supplied with a detailed description of the equipment, along with the nameplate information, if it can be obtained.

MSR005-2: Assigning of Numbers

Maintenance personnel requiring ID numbers for equipment should request them directly from the Substation Asset Management Group.

ID numbers are assigned to batteries, battery chargers, current transformers, potential transformers, lightning arresters, metering tanks, power cables, potheads, air break and disconnect switches, power fuses, switchgear, power transformers, circuit breakers, voltage regulators, reclosers and capacitors.

REFERENCE
EQUIPMENT ID NUMBERING

MSR005-3: Installation of Numbers

ID numbers are installed at pre-commissioning on equipment, as designated, and it is the responsibility of the maintenance personnel to request an ID number and to ensure that it is installed, where required. The table below provides further detail on the specific numbering procedures for different equipment.

The type of number used is the standard 7.62 cm (3 in.) yellow or red reflective numerals that we have in stock or black lettering on the standard yellow company ID label background.

The following procedure should be used for installing the numbers:

1. Clean the area where the number is to be applied. It may be necessary to use a cleaning agent on equipment that has been exposed to contamination.

2. Heat the area with a torch until the surface stays dry.

3. Apply the numerals to the heated metal and apply sufficient hand pressure to secure it firmly.

4. If necessary, apply a light coat of spray varnish over the number. This aids in keeping the number in place and protects it from the elements.

5. The ID number should always be installed on the actual equipment and not on its stand.

6. ID numbers for reclosers and voltage regulators should not be located on their control panels.

Type No.	Equipment	Numbering Procedure
10	Batteries	Complete ID number installed near bank or on rack during Maintenance I.
11	Battery Chargers	Complete ID number installed during Maintenance I.
12	Current Transformers	Complete ID number to be installed only when CT is taken out of service.
13	Potential Transformers	Complete ID number to be installed only when PT is taken out of service.
14	Lightning Arresters	ID number not to be installed.
15	Power Cables	ID number not to be installed.
16	Potheads	ID number not to be installed.
17	Air-break and Disconnect Switches	Complete ID number to be installed on each phase only when switch is taken out of service.
18	Power Fuses	Complete ID number to be installed on each phase only when fuses are taken out of service.

REFERENCE
EQUIPMENT ID NUMBERING

Type No.	Equipment	Numbering Procedure
19	Switchgear (each cubicle)	ID number not to be installed.
20	Power Transformers	Complete ID number installed during Maintenance I.
21	Circuit Breakers	Complete ID number installed during Maintenance I.
22	Voltage Regulators	Complete ID number installed during Maintenance I.
23	Reclosers	Complete ID number installed during Maintenance I.
24	Capacitors	Complete ID number installed during Maintenance I.
25	Metering Tanks	Complete ID number installed during Maintenance I.

AVTMTTR100
Rev. C
January 2004

Instruction Manual AVTM TTR100
for
Single-Phase Handheld TTR®
Transformer Turn Ratio Test Set
Catalog No. TTR100

High-Voltage Equipment
Read the entire manual before operating.

Aparato de Alto Voltaje
Antes de operar este producto lea este manual enteramente.

Megger.

2621 Van Buren Ave
Norristown, PA 19403-2329
610-676-8500

www.megger.com

Single-Phase Handheld TTR®
Transformer Turn Ratio Test Set
Instruction Manual

Copyright Notice

Copyright© 2003 by Megger. All rights reserved.

Disclaimer Notice

The information contained in this manual is believed to be adequate for the intended use of the product. If the product or its individual instrument are used for purposes other than those specified herein, confirmation of their validity and suitability must be obtained from Megger. Refer to the warranty information included at the end of this instruction manual. Specifications are subject to change without notice.

TABLE OF CONTENTS

INTRODUCTION 1
Receiving Instructions 1
General Information 1

SAFETY 5

SPECIFICATIONS 9
Electrical 9
Environmental Conditions 12
Physical Data 12
Accessories Supplied 12
Optional Accessories 13

DESCRIPTION 15
Principle of Operation 15
Controls, Indicators, and Connectors (Figure 4-2) 16

SETUP AND CONNECTIONS 19
General Instructions 19
Transformers 19
Single-Phase, Two-Winding Transformers 20
Distribution Transformers with Two Secondary Windings 20
Current Transformers (CTs) 23
T-Type Transformers 26
Connections and Vector Voltage Diagrams 27

OPERATION 53
General Operating Procedure 53
Description of Menus and Test Screens 53
Quick Test Single Phase Transformer 59
Quick Test Three Phase Transformer 60

Quick Test T-Type Transformers 61
Full Test Single Phase Transformer 62
Full Test Single Phase Tapped Transformer 63
Full Test CTs 64
Full Test Regulator 64
Test Result Symbols 65
Custom Configurations 66
System Setup 67
Error Messages 71
Use with the Optional Printer 75
Using COMLink Program 76

SERVICE 83
Maintenance 83
Calibration 83
Battery Maintenance 84
Troubleshooting 85
Repair 86

ORDERING INFORMATION AND SPARE PARTS LIST 87

GLOSSARY 91

WARRANTY 93

INDEX 95

LIST OF ILLUSTRATIONS

Figure 4-1. Single-Phase TTR Test Set Block Diagram 16
Figure 4-2 Single-Phase TTR Display & Control Panel 17
Figure 4-3. Top Side Connector Panel 18
Figure 5-1. Setup for Testing Single-Phase Transformer 21
Figure 5-2. Setup for Testing Single-Phase Autotransformer 21
Figure 5-3. Setup for Testing Single-Phase, Type A (Straight Design) Step Voltage Regulator .22
Figure 5-4. Setup for Testing Single-Phase, Type B (Inverted Design) Step Voltage Regulator.22
Figure 5-5. Setup for Testing Unmounted Current Transformer 24
Figure 5-6. Setup for Testing Taps on Multiple Tap CT 24
Figure 5-7. Setup for Testing BCT Mounted on Single-Phase Two-Winding Transformer....25
Figure 6-1. Opening Display Screen 54
Figure 6-2. Main Menu Screen 55
Figure 6-3. Transformer Configuration Screen 56
Figure 6-4. Single Phase Transformer Configuration Screen 57
Figure 6-4a. Additional Single Phase Transformer Configuration Screen 57
Figure 6-5. Three Phase Transformer Configuration Screen 58
Figure 6-5a. Three Phase Transformer Configuration Screen 58
Figure 6-6. T - Type Transformer Configuration Screen 58
Figure 6-7. Transformer Rating Screen 59
Figure 6-8. TEST SETUP Screen 62
Figure 6-9. Custom Configs. Screen 66
Figure 6-10. SYSTEM SETUP Screen 1 67
Figure 6-11. SYSTEM SETUP Screen 2 68
Figure 6-12. SAVED READINGS Screen 69
Figure 6-13a. Sample Test Report Header 75
Figure 6-13b. Sample Single Phase Test Report 75
Figure 6-14. Report Printout 80

LIST OF TABLES

Table 5-1. ANSI Transformer Winding Phase Relationship....26
Table 5-2. ANSI Transformer Winding Phase Relationship....29
Table 5-3. CEI/IEC 76-1:1993 Transformer Winding Phase Relationship....37
Table 5-4. Transformer Winding Phase Relationship (Australian Std. 2374, Part 4 - 1982) 47
Table 6-1. Self-test Error Messages 71
Table 6-2. Test Error Messages....72
Table 6-3. Test Result Error Messages....73
Table 6-4. Miscellaneous Messages....74
Table 7-1. Troubleshooting Guide 85

1

INTRODUCTION

Receiving Instructions

Check the equipment received against the packing list to ensure that all materials are present. Notify Megger of any shortage.
Telephone 610-676-8500.

Examine the instrument for damage received in transit. If any damage is discovered, file a claim with the carrier at once and notify Megger or its nearest authorized sales representative, giving a detailed description of the damage.

This instrument has been thoroughly tested and inspected to meet rigid specifications before being shipped. It is ready for use when set up as indicated in this manual.

General Information

CAUTION
Charge battery ONLY when "CHARGE BATTERY" message or low battery voltage symbol appears on display.

The Single-Phase Handheld TTR® Test Set is fully automatic, self-checking, self-calibrating, menu-driven unit. The test set measures the turn ratio, phase shift, excitation current, dc winding resistance and polarity of single and three phase (phase by phase) distribution transformers, as well as power, potential & current transformers. The Single-Phase Handheld TTR® Test Set is powered by rechargeable NIMH batteries. The test set is a portable instrument housed in a sturdy plastic case. A carrying case with strap and an accessory pouch is provided with the test set.

The test set can be used to test single-phase and three-phase transformers, both with and without taps in accordance with the requirements of the IEEE C57.12.90 – 1997 standards. For three-phase transformers, the test set is connected to

each of the three phases of the transformer to be tested, and measurements are made on a phase by phase basis.

Turn ratio, phase shift, excitation current, dc winding resistance readings, transformer vector group, and polarity are displayed on a large LCD. Transformer excitation current as well as phase shift angle helps to detect transformer shorted turns or an unequal number of turns connected in parallel. Operating condition (error) messages identify incorrect test connections, abnormal operating condition, or winding problems. Test results can be saved internally within the test set, printed out on an optional printer, or uploaded to a personal computer (PC).

Features include:

- Fully automatic operation.
- Self-checking at power-up.
- Self-calibration at each measurement.
- User-friendly, menu-driven operation.
- Test turn ratio, phase shift (in either degree or centiradian), excitation current, vector group (1PH0 or 1PH6), dc winding resistance and polarity.
- Easy measuring of single and three phase (phase by phase) transformers, as well as potential & current transformers.
- Storage capacity for up to 200 tests results for retrieving, printing out, or uploading to a PC.
- Saving up to 100 custom transformer settings for faster and easier testing.
- Checking reverse connections at start of each test.
- External optional printer records test data.
- External PC or laptop can be connected instead of a printer to transfer test results and to provide full transformer test report.
- Quick test mode provides the fastest testing of a transformer.
- Two auto selected excitation test voltages: 8 V, and 1.5 V.
- Testing to ANSI, IEC, or Australian standards.

- Leads marked to ANSI, IEC, and Australian standards.
- Choice of six languages.
- Large, easy-to-read LCD shows alphanumeric data
- Meets the requirements of both the European EMC and Low Voltage Directives.
- Trouble-free operation in switchyards under electrostatic and magnetic interference conditions.

Megger.

2

SAFETY

The TTR100 must be used on de-energized transformers. However, the transformer to which the test set is connected is a possible source of high-voltage electrical energy and all persons making or assisting in tests must use all practical safety precautions to prevent contact with potentially energized parts of the transformer and related circuits. Persons actually engaged in the test must stand clear of all parts of the complete high-voltage circuit, including all connections, unless the test set is de-energized and all parts of the test circuit are grounded. Persons not directly involved with the work must be kept away from test activities by suitable barriers, barricades, or warnings.

Treat all terminals of high-voltage power equipment as a potential electric shock hazard. There is always the possibility of voltages being induced at these terminals because of proximity to energized high-voltage lines or equipment. Always disconnect test leads from power equipment before attempting to disconnect them at the test set. The ground connection must be the first made and the last removed. Any interruption of the grounding connection can create an electric shock hazard.

This TTR100 operates from a re-chargeable battery pack. A universal charger, for re-charging the battery pack, is provided with the instrument. The TTR100 can be utilized while its battery pack is being charged. The universal charger is equipped with a three-wire power cord and requires a two-pole, three-terminal, live, neutral, and ground type connector. The voltage to ground from the live pole of the power source must be within the following rated operating voltage:

100 to 250 V ac single phase, 50/60 Hz ±2 Hz

The neutral pole must be at ground potential. Before making connection to the power source, determine that the charger rating matches the voltage of the power source and has a suitable two-pole, three-terminal grounding type connector.

The power input plug must be inserted only into a mating receptacle with a ground contact. Do not bypass the grounding connection. Any interruption of the

grounding connection can create an electric shock hazard. Determine that the receptacle is properly wired before inserting the plug.

For 230 V input, the neutral terminal of the charger input supply cord (white or blue lead) must be connected to the neutral pole of the line power source. The ground terminal of the input supply cord (green or yellow/green lead) must be connected to the protective ground (earth) terminal of the line power source. The black or brown cord lead is the live (hot) lead.

The instrument's battery pack can also be charged with an automobile battery and an optional 12 VDC to 120/230V AC inverter.

Any repair or component replacement must be performed by qualified service personnel.

Megger has made formal safety reviews of the initial design and any subsequent changes. This procedure is followed for all new products and covers areas in addition to those included in applicable standards. Regardless of these efforts, it is not possible to eliminate all hazards from electrical test equipment. For this reason, every effort has been made to point out in this instruction manual the proper procedures and precautions to be followed by the user in operating this equipment and to mark the equipment itself with precautionary warnings where appropriate. It is not possible to foresee every hazard that may occur in the various applications of this equipment. It is therefore essential that the user, in addition to following the safety rules in this manual, also carefully consider all safety aspects of the test before proceeding.

- Safety is the responsibility of the user.
- Follow your company safety procedures.
- Misuse of this equipment can be extremely dangerous.
- The purpose of this equipment is limited to use as described in this manual. Do not use the equipment or its accessories with any device other than specifically described.
- Never connect the test set to energized equipment.
- Do not use the test set in an explosive atmosphere.
- Corrective maintenance must only be performed by qualified personnel who are familiar with the construction and operation of the test set and the hazards involved.

- Refer to IEEE 510 - 1983, IEEE Recommended Practices for Safety in High-Voltage and High-Power Testing, for additional information.

If the test equipment is operated properly and all grounds correctly made, test personnel need not wear rubber gloves. As a routine safety procedure, however, some users require that rubber gloves be worn, not only when making connections to the high-voltage terminals, but also when manipulating the controls. Megger considers this an excellent safety practice.

Users of equipment should note that high-voltage discharges and other sources of strong electric or magnetic field may interfere with the proper functioning of heart pacemakers. Persons with heart pacemakers should obtain expert advice on the possible risks before operating this equipment or being close to the equipment during operation.

Warning and caution notices are used throughout this manual where applicable and should be strictly observed. These notices appear in the format shown below and are defined as follows:

WARNING

Warning, as used in this manual, is defined as a condition or practice which could result in personal injury or loss of life.

CAUTION

Caution, as used in this manual, is defined as a condition or practice which could result in damage to or destruction of the equipment or apparatus under test.

Megger.

3

SPECIFICATIONS

Electrical

Type of Power

Re-chargeable NIMH battery pack, 3.6 V, 3800 mAh

Charging time: 3.5 hrs (approximately)

Battery charge level indication on power up

Pollution Degree

TTR is designed for Pollution Degree II

Environmental Protection

Dust and shower protection to IP54

Output Test Voltage and Current

2 test voltages, auto selectable:	8V rms for testing transformers & PTs; 1.5V rms or 8V rms for testing CTs.
Current:	up to 100 mA

Test Frequency

55Hz, internally generated providing a universal 50 / 60 Hz test set.

Megger.

Loading of Test Transformer

Less than 0.1 VA

Measuring Ranges

Turn ratio:	8 V rms: 0.8 to 20,000, 5 digit resolution (For transformers & PT and CT testing) 1.5V rms: 5.0 to 2220, 5 digit resolution (For CT testing)
Current:	0 to 100 mA, 4 digit resolution
Phase deviation:	± 180 degrees, 1 decimal point for the minutes display, 2 decimal point for the degree display, 2 decimal points for the centiradian display
DC Winding Resistance:	0 to 2000 Ohms, 4 digit resolution
Transformer Polarity:	Additive or Subtractive, single phase transformers
Transformer vector group:	1PH0 or 1PH6

Calculated Value

Ratio Deviation, %	Difference between calculated and measured turn rations, in %

Accuracy

Turn ratio:	±0.1% (0.8 to 2000) ±0.15% (2001 to 4000) ±0.20% (4001 to 10,000) ±0.25% (10,001 to 20,000)
Current (rms):	±(2% of reading + 1 digit)
Phase deviation:	±3 minutes

DC Winding Resistance:	±(10% of reading ± 1 digit) (10 to 2000 Ohms range) ±(10% of reading ±1 mOhm) (10mOhm to 9.99 Ohms range) ±(10% of reading ±0.5 mOhm) (0.10mOhm to 9.99 mOhms range)

Measurement Method

In accordance with ANSI/IEEE C57.12.90

Transformer Winding Phase Relationship

ANSI C57.12.70-1978

CEI/IEC 76-1:1993 and Publication 616:1978

AS-2374, Part 4-1982 (Australian Standard)

Measuring Time

4 - 6 sec for turns ratio, phase shift, excitation current, polarity, and transformer vector group testing;

20 – 120 sec for turns ratio, phase shift, excitation current, polarity, transformer vector group, and winding d.c. resistance testing depending on type and power rating of transformer.

Display

Wide temperature range LCD module, 128 x 64 dots, 21 characters by 8 lines.

Memory Storage

Up to 200 test results (single phase or 3-phase transformers) and up to 100 user defined transformer settings.

Interface

RS232C port, 9 pin, up to 57.6 Kbaud (19.2 Kbaud for printer)

Environmental Conditions

Operating temperature range:	-4° to 131°F (-20 to 55 °C)
Storage temperature range:	-58° to 140°F (-50 to 60 °C)
Relative humidity:	0 to 90% noncondensing (operating) 0 to 95% noncondensing (storage)

Physical Data

Dimensions:	9.5 x 4.5 x 1.875 in. (241 x 115 x 48 mm) (H x W x D)
Weight (test set):	3.3 lb. (1.5 kg)
Case:	Light gray color ABS case

Accessories Supplied

- Carrying case with strap for instrument and attachable pouch for provided accessories, (p/n 55-20008).
- Power supply cord for battery charger, determined by country.
- Universal battery charger, (p/n 35757)
- H winding test cable, 6 ft (1.8 m), two leads (marked H1 and H2) for single phase transformer testing, and ground lead (marked GROUND), shielded, heavy-duty clip-end terminated, (p/n 35502 – 521).
- X winding test cable, 6 ft (1.8 m), three leads (marked X1, X2, and X3) for single phase (with up to two secondary windings) transformer testing, shielded, heavy-duty clip-end terminated, (p/n 35502 – 511).
- Software for uploading test results to a PC, (p/n 35794 – 2).
- RS232 cable for connecting the TTR to a PC, (p/n 33147 – 18).
- Quick start guide, (p/n 55-20013).
- Instruction manual, (AVTMTTR100).

Optional Accessories

- Battery/line-powered serial thermal printer package for 120 V ac (p/n 35755-1). The package includes the thermal printer, a battery pack, an AC adapter and interface cable.
- Battery/line-powered serial thermal printer package for 230 V ac (p/n 35755-2). The package includes the thermal printer, a battery pack, an AC adapter and interface cable. Printed out data includes date, transformer vector group according to ANSI, IEC or AS (Australian) standard, transformer under test ID, calculated and measured turn ratios, ratio deviations, polarity, phase deviation angle, test voltage, exciting current values, and winding resistance.
- X winding test cable, 12 ft (3.6 m), three leads (marked X1, X2, and X3) for single phase (with up to two secondary windings) transformer testing, shielded, heavy-duty clip-end terminated (p/n 35502-510).
- H winding test lead, 12 ft (3.6 m), two leads (marked H1 and H2) for single phase transformer testing, and ground lead (marked GROUND), shielded, heavy-duty clip-end terminated (p/n 35502-520).
- X winding test cable, 20 ft (6 m), three leads (marked X1, X2, and X3) for single phase (with up to two secondary windings) transformer testing, shielded, heavy-duty clip-end terminated (p/n 35502-512).
- H winding test lead, 20 ft (6 m), two leads (marked H1 and H2) for single phase transformer testing, and ground lead (marked GROUND), shielded, heavy-duty clip-end terminated (p/n 35502-519).
- Semi hard fabric transport case, (p/n 35788)
- Additional battery pack, (p/n 35753)
- Additional printer paper, one roll, (p/n 27705-1)
- Deluxe kit with 120 V printer (p/n55-10002)
- Deluxe kit with 230 V printer (p/n55-10003)
- Inverter 12VDC/120Vac (p/n 35754)

Megger.

4

DESCRIPTION

Principle of Operation

The TTR test set provides accurate measurements of the transformer input and output voltages and then calculates a transformer turn ratio. The TTR also measures phase shift between primary and secondary windings of a transformer, the DC resistance winding and transformer excitation current. In addition, it provides polarity indications for single phase distribution transformers.

A block diagram of single-phase TTR is shown in Figure 4-1. The excitation voltage oscillator applies a 55-Hz test voltage to a transformer under test. There are three test voltages: 0.3 V used for checking connections, 1.5 V used for current transformer testing, and 8 V used for current and voltage transformer testing.

Resistance measuring circuitry tests primary and secondary winding resistance at 25 mA (max) DC current.

Input and output transformer voltages go through conditioning circuitry. This circuitry improves signal-to-noise ratio of the test signal, and provides full voltage range of the test signals at A/D converter inputs.

A/D converter is used to convert the analog measurement signals to their digital replica. The converted output digital signals are applied to CPLD (complex programmable logic device) and then are transferred to microprocessor.

The microprocessor is the main part of the TTR test set. It provides proper timing sequence of operation, gathers and calculates the test result, and interfaces with peripherals. There are five main peripherals in the TTR test set: RTC (real time clock), external memory, RS-232/Printer port, LCD display, and alphanumeric keypad.

DC power supply converts the primary battery voltage (NiMH battery pack, 3.6 V, 3800 mAh) into the voltages needed for proper operation of the test set.

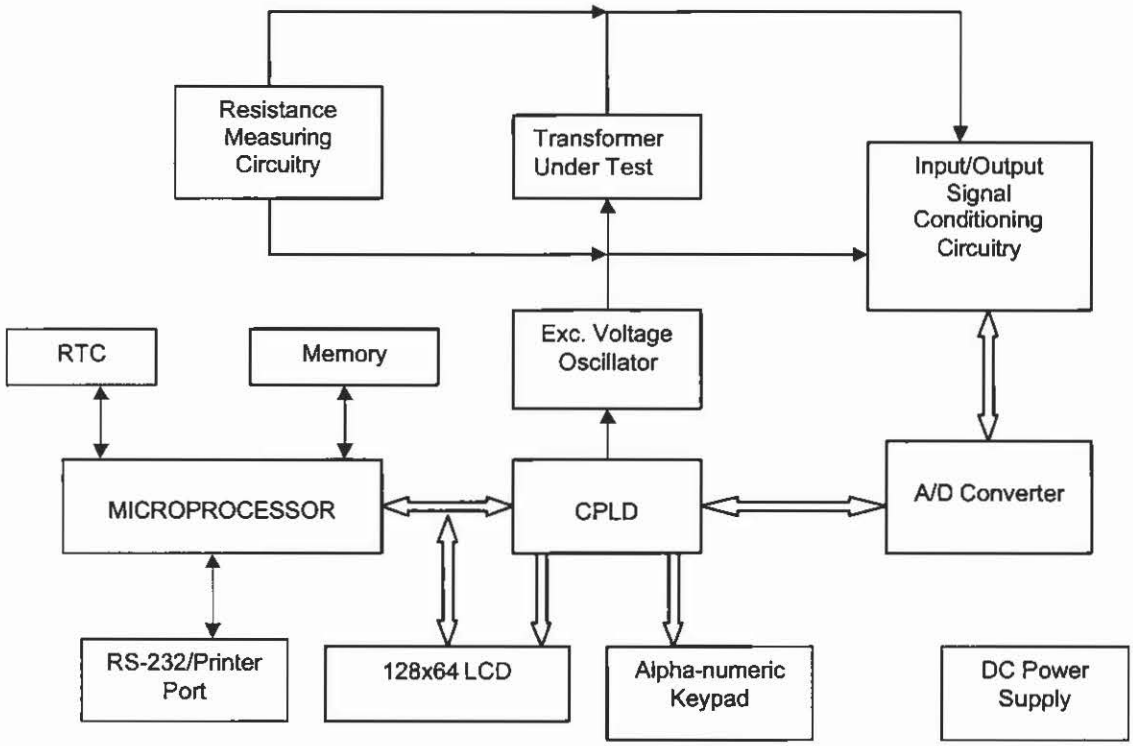

Figure 4-1. Single-Phase TTR Test Set Block Diagram

Controls, Indicators, and Connectors (Figure 4-2)

Contrast	This knob adjusts the viewing resolution of the screen.
Backlight	A momentary depression of the switch will either activate or de-activate the backlight. It will remain ON for a period of three minutes without activity.
Power ON Switch	Depressing this switch momentarily will active the TTR100.
Power OFF Switch	Depressing this switch momentarily will de-active the TTR100.
EMERGENCY TEST OFF	By depressing any key on the keypad will terminate the test in progress.
DISPLAY SCREEN	LCD displays menus and test information. A low battery indicator will be displayed in the upper right corner when one hour of energy is remaining in the battery pack.

KEYPAD

16-button keypad for entering menu selections and navigating through the various screens. In addition to alpha-numeric keys, there is a left & right scroll (◀) (▶) button, a space (␣) button which is combined with the number 1 button, a backspace - clear (←) button, an enter (↵) button, a combined decimal point, slash & dash sign button (. / -), and an asterisk (*) button.

NOTE: the asterisk button is used to return to the Main Menu screen from any other screen.

Figure 4-2 Single-Phase TTR Display & Control Panel

Megger.

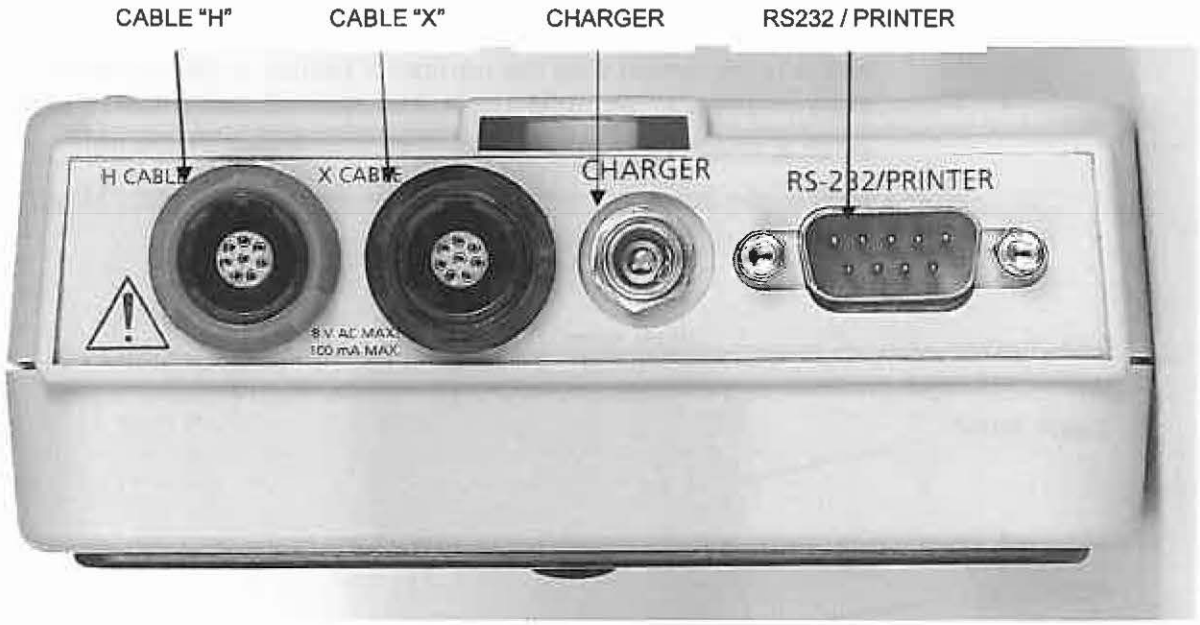

Figure 4-3. Top Side Connector Panel

CABLE "H"	Plug receptacle for connecting test leads to the high-voltage (H) winding of a transformer. The plug and receptacle are keyed to prevent the cable from being inserted incorrectly, and to make certain that the correct cable is used.
CABLE "X"	Plug receptacle for connecting test leads to the low-voltage (X) winding of a transformer. The plug and receptacle are keyed to prevent the cable from being inserted incorrectly, and to make certain that the correct cable is used.
CHARGER INPUT	Connecting the universal charger will charge the battery pack.

CAUTION
Do not connect charger if battery is disconnected or removed from unit.

RS232/PRINTER	A DB-9 male connector for connecting a printer or connecting the TTR100 to a PC.

5

SETUP AND CONNECTIONS

General Instructions

When testing high-voltage transformers, caution must be used at all times and all safety precautions followed. Read and understand all safety information contained in Section 2, Safety.

WARNING

Ensure that the transformer to be tested is completely de-energized. Check every winding. Ensure that all terminals of the transformer are disconnected from line or load at the transformer. For some transformers, connections to ground may be left in place.

Never interchange connections between the high- and low-voltage transformer terminals. Failure to observe proper connections will result in a safety hazard and may result in damage to the test set or transformer.

The TTR100 has been designed to test a variety of transformers, such as: Single phase, Three phase (one phase at a time), CTs, PTs and Regulators. The connection instructions of the TTR100 to the device to be tested are contained and illustrated within the TTR100.

NOTE: The illustrated connection diagrams are provided as connection guides and do not suggest the physical location of the bushings/terminals of the device being tested.

Transformers

The setup and connection instructions pertaining to ratio, polarity, and phase relation assume that the transformer under test, connections, and terminal markings comply with the requirements of ANSI C57.12.70-1978 *American National Standards Terminal Markings and Connections for Distribution and Power Transformers*. The H test leads of the test set are the exciting leads. The TTR100 will utilize the 8 or 1.5V test voltage level when testing CTs, and it will

automatically switch between the indicated voltages. All other transformers will be tested at 8 V.

When testing DC winding resistance, it is important that reliable connections are made with the transformer being tested. Measuring time will vary depending on size and vector group of the transformer being tested.

NOTE: The polarity indicated by the TTR100 is relative to the manner in which it is connected to the device under test.

Single-Phase, Two-Winding Transformers

Perform the following setup procedure for single-phase, two-winding transformers:

1. Connect the H and X test cables to the respective H and X receptacles of the test set. Make sure that the connectors are fully engaged into the receptacles.
2. Connect the ground lead of the H test lead set to a low-impedance earth ground. Connect the clips marked H1 and H2 of the test lead to the corresponding (high-voltage winding) terminals of the transformer under test.
3. Connect the clips marked X1, X2 of the test lead to the corresponding (low-voltage winding) terminals of the transformer under test. Keep X3 clear of ground and test setup. Figures 5-1 and 5-2 show test setups for single-phase transformers.
   Figures 5-3 and 5-4 show test setups for regulators. These and additional connection diagrams are found within the TTR100.

Distribution Transformers with Two Secondary Windings

The TTR100 may test the turn ratios of both distribution transformer secondary windings simultaneously. Perform the following setup procedure for single-phase distribution transformer with two secondary windings:

1. Connect the H and X test cables to the respective H and X receptacles of the test set. Make sure that the connectors are fully engaged into the receptacles.
2. Connect the ground lead of the H test lead set to a low-impedance earth ground. Connect the clips marked H1 and H2 of the test lead to the corresponding (high-voltage winding) terminals of the transformer under test.
3. Connect the clips marked X1, X2 and X3 of the test lead to the corresponding (low-voltage winding) terminals of the transformer under test when testing both halves of secondary winding (X1 – X2 and X3 – X2).

   When testing full secondary winding (X1 – X3), connect X1 lead to X1 terminal, connect X2 lead to X3 terminal (X3 lead is not used in such test, and it should be kept clear of ground and other terminals). Remove the ground connection to X2 terminal.

Notes:

1. The connection instructions of the TR100 to distribution transformer do not suggest the physical location of the bushing/terminals of the transformer under test.
2. Polarity of the transformer is displayed for the connections shown.

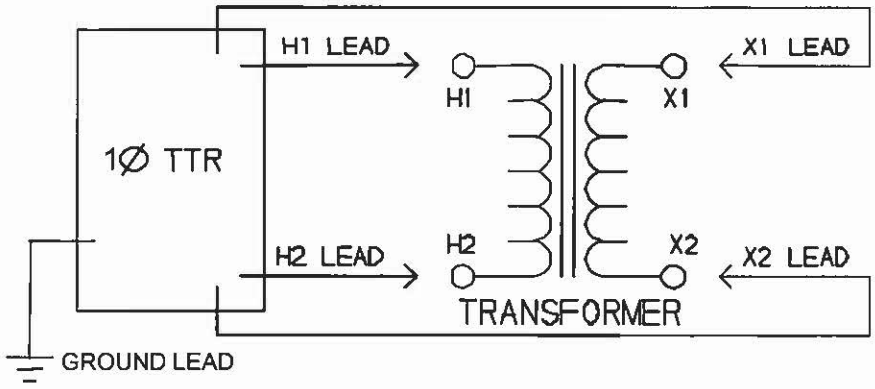

Figure 5-1. Setup for Testing Single-Phase Transformer

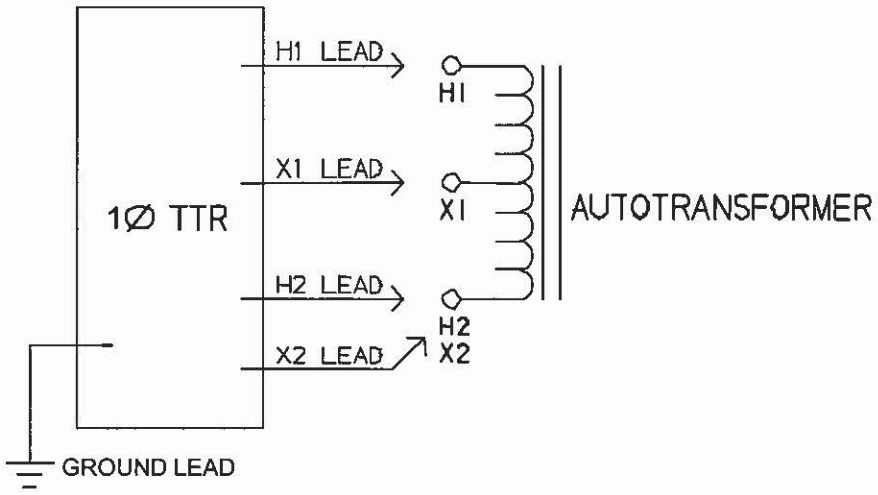

Figure 5-2. Setup for Testing Single-Phase Autotransformer

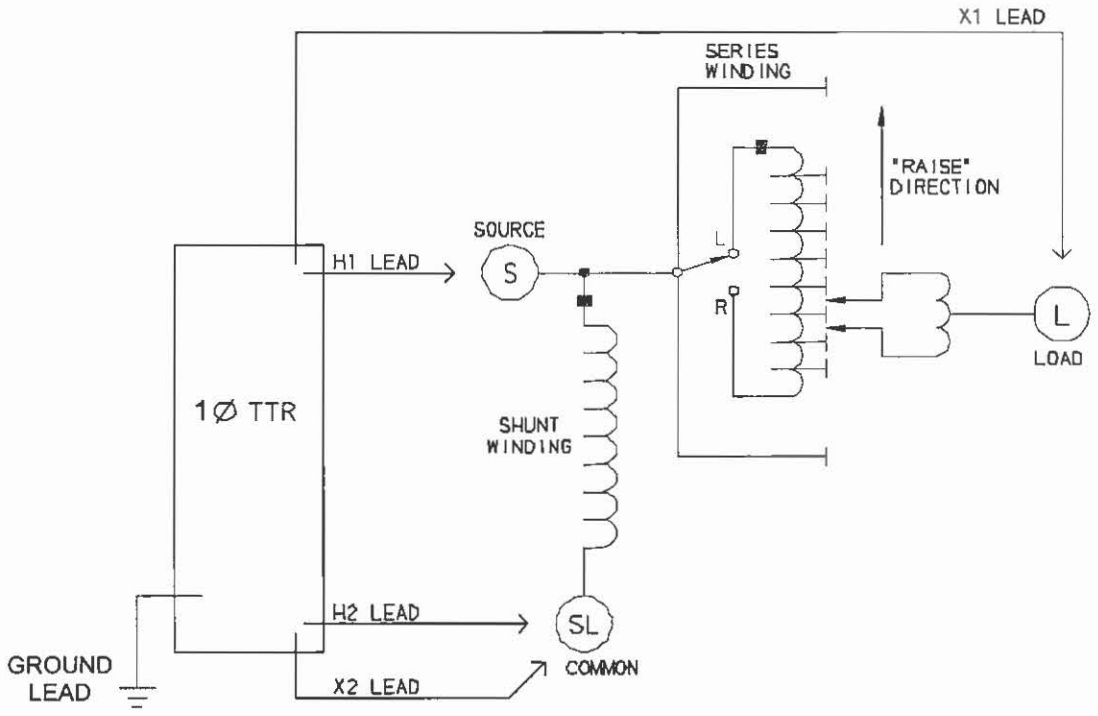

Figure 5-3. Setup for Testing Single-Phase, Type A (Straight Design) Step Voltage Regulator

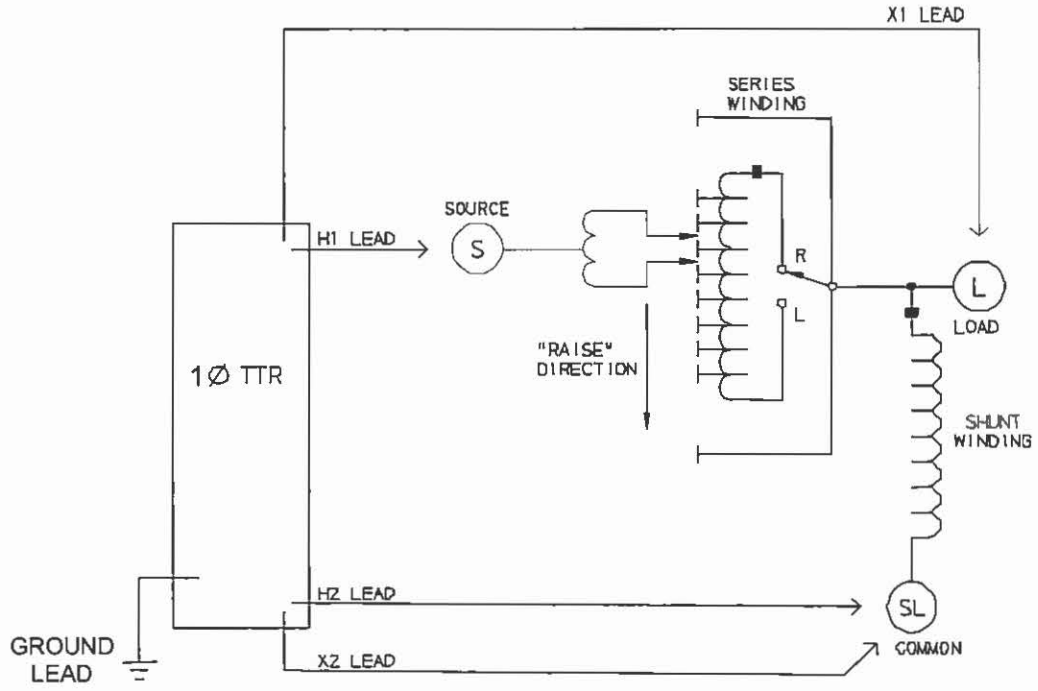

Figure 5-4. Setup for Testing Single-Phase, Type B (Inverted Design) Step Voltage Regulator

Current Transformers (CTs)

Connections to CTs are made backwards compared to power, distribution or potential transformers. The H terminals on the test set must be connected to the X terminals on the CT; and the X terminals on the test set must be connected to the H terminals on the CT.

NOTE: Dots on the housing of the transformer are commonly used to identify terminals of the same polarity.

WARNING

Failure to observe proper connections will result in a safety hazard and may result in damage to the test set or CT. Failure to observe voltage rating of low-current X winding may result in damage to the CT.

NOTE: The TTR100 may supply up to 100 mA of excitation current. The TTR100 will automatically select the appropriate test voltage (8 V or 1.5 V) when testing CTs. Some current transformers with turn ratio of 150:5 and less requires more than 100 mA of excitation current when excited from1.5 V source. These CTs can not be tested with the TTR100.

Unmounted CTs

The connection instructions of the TTR100 to the device to be tested are contained and illustrated within the TTR100.

NOTE: The illustrated connection diagrams are provided as connection guides and do not suggest the physical location of the bushings / terminals of the device being tested.

Figure 5-5 shows the setup for testing unmounted current transformers. Figure 5-6 shows the setup for testing the taps on a multiple-tap CT.

Bushing Current Transformer (BCT) Mounted on Single-Phase, Two-Winding Transformer

A turn-ratio test can be performed on a BCT after it has been mounted on a circuit breaker or power transformer entrance bushing. The test can be performed without removal of the BCT from the equipment. Connect the TTR100 to BCT as shown in Figure 5-7.

NOTE: A jumper lead is not supplied with the TTR100.

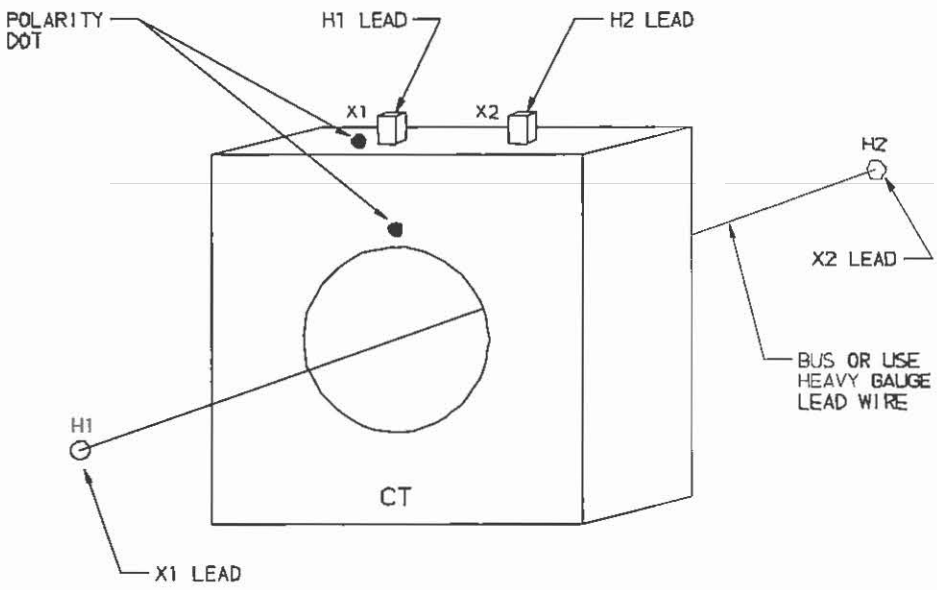

Figure 5-5. Setup for Testing Unmounted Current Transformer

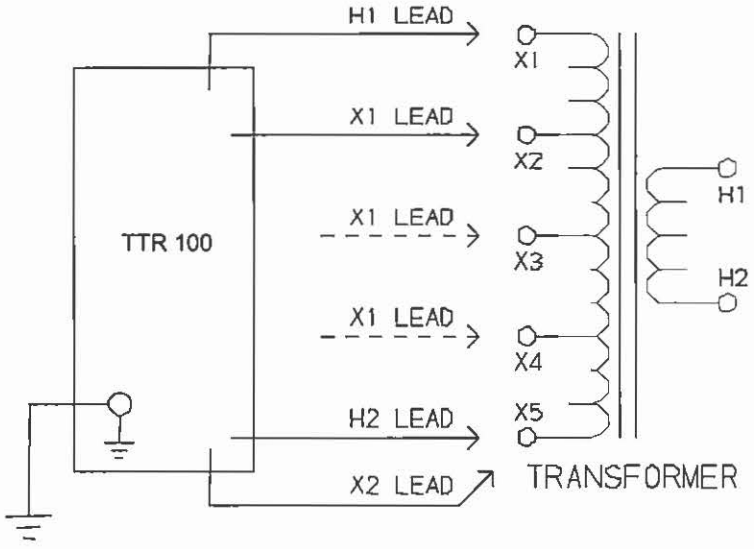

Figure 5-6. Setup for Testing Taps on Multiple Tap CT

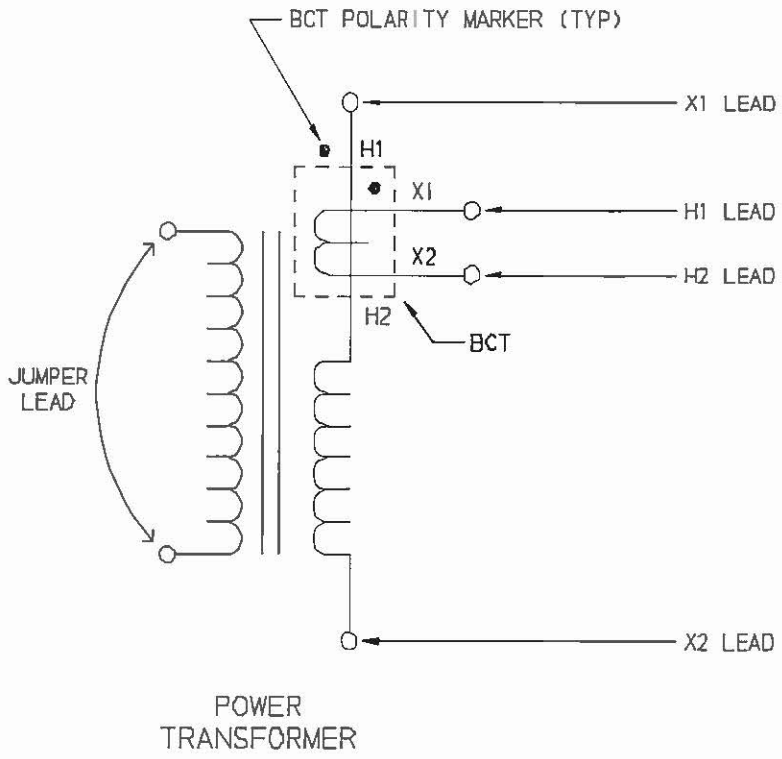

Figure 5-7. Setup for Testing BCT Mounted on Single-Phase Two-Winding Transformer

Megger.

T-Type Transformers

T-type transformers represent a special type of three-phase transformers. This transformer may be tested as a single phase transformer.

To make a measurement on a T-type transformer, match the vector diagram from the transformer nameplate to the corresponding winding connection diagram from Table 5-3 then, select the corresponding IEC vector group (column 1 of table) on the appropriate setup menu of the instrument.

Table 5-1. ANSI Transformer Winding Phase Relationship

IEC Vector Group	Winding Connection: High-Voltage Winding (H)	Winding Connection: Low-Voltage Winding (X)	External Jumpers	Phase tested	Winding Tested: High-Voltage Winding	Winding Tested: Low-Voltage Winding	Calculated Turn Ratio
T-T 0	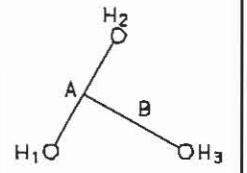	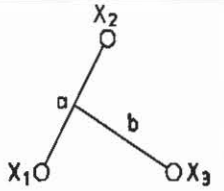	- H1 -H2 X1 -X2	A B	H1 - H2 H1 – H3	X1 - X2 X1 – X3	$\frac{V_H}{V_X}$ $\frac{V_H}{V_X}$
T-T 30 lag	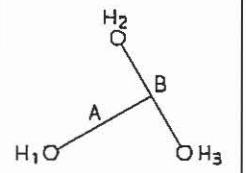	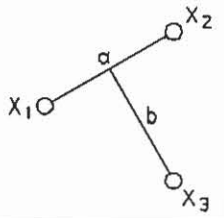	H2 -H3 X1 -X2	A B	H1 – H3 H2 – H3	X1 - X2 X1 – X3	$\frac{V_H}{V_X} \bullet \frac{\sqrt{3}}{2}$ $\frac{V_H}{V_X} \bullet \frac{2}{\sqrt{3}}$
T-T 30 lead	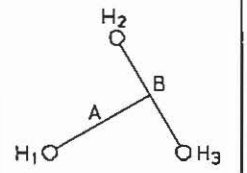	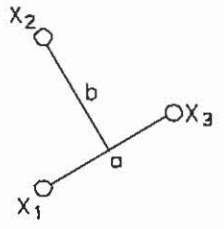	H2 -H3 X1 –X3	A B	H1 – H3 H2 – H3	X1 – X3 X2 – X1	$\frac{V_H}{V_X} \bullet \frac{\sqrt{3}}{2}$ $\frac{V_H}{V_X} \bullet \frac{2}{\sqrt{3}}$

NOTES:

1. *The connection instruction of the TTR100 to the device to be tested is contained within the TTR100. The connection information is provided as connection guides and do not suggest the physical location of the bushings / terminals of the device being tested.*
2. *Any connection(s) to ground/case of T-type transformer on H or X side should be removed before testing a transformer.*

Connections and Vector Voltage Diagrams

Table 5-2 shows winding diagrams for standard transformers and nonstandard transformers for power and distribution transformers marked in accordance with the ANSI standard. Table 5-3 shows winding diagrams for power transformers marked in accordance with the CEI/IEC standard, and Table 5-4 shows winding diagrams for power transformers marked in accordance with the Australian standard.

To make a measurement on a three-phase power transformer, match the vector diagram from the transformer nameplate to the corresponding winding connection diagram from Table 5-2 through 5-4, then select the corresponding IEC vector group (column 2 of table) on the appropriate setup menu of the instrument.

The tables show the windings tested for each of the three phases. The tables also show the relationship between the measured turn ratio and the actual line-to-line voltage ratio. For the ANSI specification, the rated voltage on the high-voltage winding is represented by V_H; V_X represents rated voltage on the low-voltage winding.

Notes to Table 5-2

Transformer terminal markings for distribution and power transformers marked in accordance with requirements of American National Standard Institute, Inc (ANSI) standard C57.12.70 – 1978.

Definition of Symbol Designations

H_1, H_2, H_3	External terminals on HV transformer winding.
X_1, X_2, X_3	External terminals on LV transformer winding.
H_0	External neutral terminal on HV transformer winding.
X_0	External neutral terminal on LV transformer winding.
*	Inaccessible neutral point on HV or LV transformer winding.
V_H	Nameplate voltage rating (line-to-line) of HV transformer winding.
VX	Nameplate voltage rating (line-to-line) of LV transformer winding.
A, B, C	Winding tested on HV side of transformer.
a, b, c	Winding tested on LV side of transformer.

Table 5-2. ANSI Transformer Winding Phase Relationship

Copyright 1999© Megger

Diag No.	IEC Vector Group	Winding Connection: High-Voltage Winding	Winding Connection: Low-Voltage Winding	Phase Tested	External Jumpers	Winding Tested: High-Voltage Winding	Winding Tested: Low-Voltage Winding	Measured Turn Ratio
1	1ϕ 1ph0			1ϕ	—	H1 - H2	X1 - X2	$\frac{V_H}{V_X}$
2	1ϕ 1ph6			1ϕ	—	H1 - H2	X2 - X1	$\frac{V_H}{V_X}$
3	Dd0	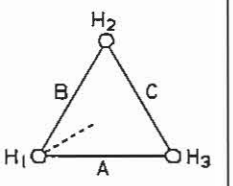	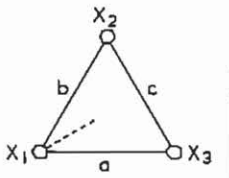	A B C	—	H1 - H3 H2 - H1 H3 - H2	X1 - X3 X2 - X1 X3 - X2	$\frac{V_H}{V_X}$
4	Dd6	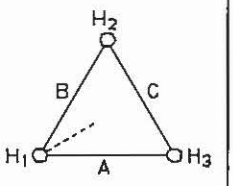	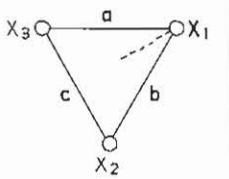	A B C	—	H1 - H3 H2 - H1 H3 - H2	X3 - X1 X1 - X2 X2 - X3	$\frac{V_H}{V_X}$
5	Dyn1	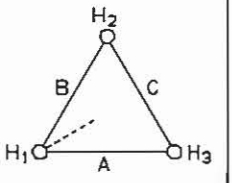	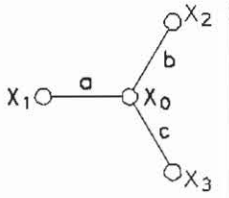	A B C	—	H1 - H3 H2 - H1 H3 - H2	X1 - X0 X2 - X0 X3 - X0	$\frac{V_H \bullet \sqrt{3}}{V_X}$
6	Dyn7	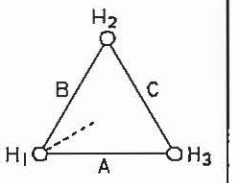	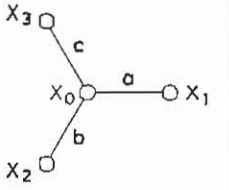	A B C	—	H1 - H3 H2 - H1 H3 - H2	X0 - X1 X0 - X2 X0 - X3	$\frac{V_H \bullet \sqrt{3}}{V_X}$
7	YNyn0	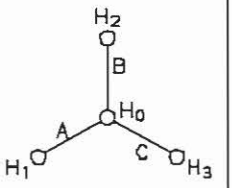	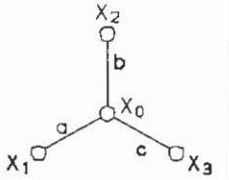	A B C	—	H1 - H0 H2 - H0 H3 - H0	X1 - X0 X2 - X0 X3 - X0	$\frac{V_H}{V_X}$

Megger.

Table 5-2. ANSI Transformer Winding Phase Relationship

Copyright 1999© Megger

Diag No.	IEC Vector Group	Winding Connection		Phase Tested	External Jumpers	Winding Tested		Measured Turn Ratio
		High-Voltage Winding	Low-Voltage Winding			High-Voltage Winding	Low-Voltage Winding	
8	YNyn6	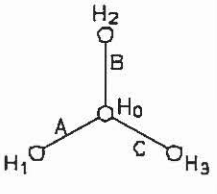	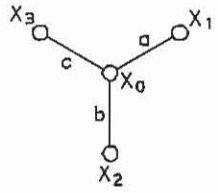	A B C	—	$H_1 - H_0$ $H_2 - H_0$ $H_3 - H_0$	$X_0 - X_1$ $X_0 - X_2$ $X_0 - X_3$	$\frac{V_H}{V_X}$
9	YNd1	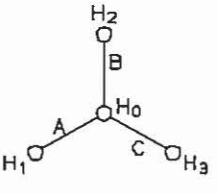	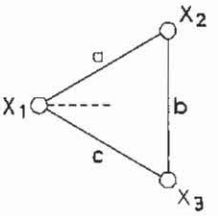	A B C	—	$H_1 - H_0$ $H_2 - H_0$ $H_3 - H_0$	$X_1 - X_2$ $X_2 - X_3$ $X_3 - X_1$	$\frac{V_H}{V_X \bullet \sqrt{3}}$
10	YNd7	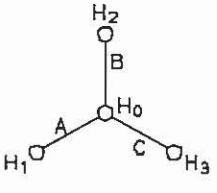	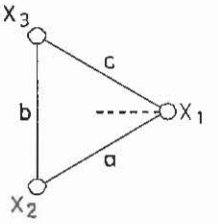	A B C	—	$H_1 - H_0$ $H_2 - H_0$ $H_3 - H_0$	$X_2 - X_1$ $X_3 - X_2$ $X_1 - X_3$	$\frac{V_H}{V_X \bullet \sqrt{3}}$
11	Dy1	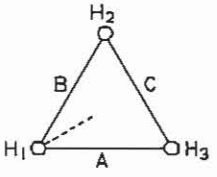	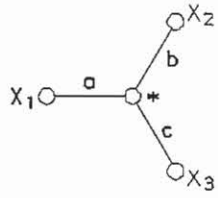	A B C	$H_3 - H_2$ $H_1 - H_3$ $H_2 - H_1$	$H_1 - H_3$ $H_2 - H_1$ $H_3 - H_2$	$X_1 - *$ $X_2 - *$ $X_3 - *$	$\frac{V_H \bullet \sqrt{3}}{V_X}$
12	Dyn5	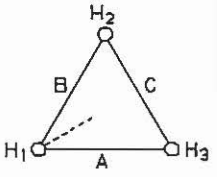	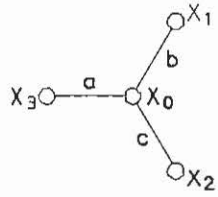	A B C	—	$H_1 - H_3$ $H_2 - H_1$ $H_3 - H_2$	$X_3 - X_0$ $X_1 - X_0$ $X_2 - X_0$	$\frac{V_H \bullet \sqrt{3}}{V_X}$
13	Dy5	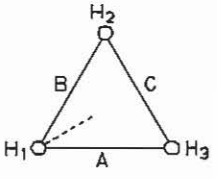	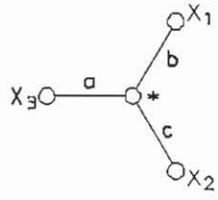	A B C	$H_3 - H_2$ $H_1 - H_3$ $H_2 - H_1$	$H_1 - H_3$ $H_2 - H_1$ $H_3 - H_2$	$X_3 - *$ $X_1 - *$ $X_2 - *$	$\frac{V_H \bullet \sqrt{3}}{V_X}$

Table 5-2. ANSI Transformer Winding Phase Relationship

Copyright 1999© Megger

Diag No.	IEC Vector Group	Winding Connection: High-Voltage Winding	Winding Connection: Low-Voltage Winding	Phase Tested	External Jumpers	Winding Tested: High-Voltage Winding	Winding Tested: Low-Voltage Winding	Measured Turn Ratio
14	Dy7	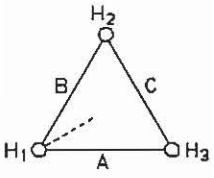	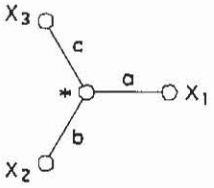	A B C	$H_3 - H_2$ $H_1 - H_3$ $H_2 - H_1$	$H_1 - H_3$ $H_2 - H_1$ $H_3 - H_2$	$* - X_1$ $* - X_2$ $* - X_3$	$\frac{V_H \bullet \sqrt{3}}{V_X}$
15	Dyn11	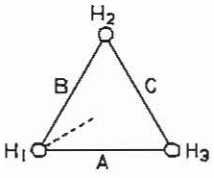	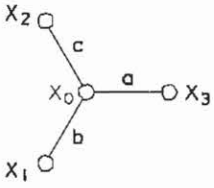	A B C	—	$H_1 - H_3$ $H_2 - H_1$ $H_3 - H_2$	$X_0 - X_3$ $X_0 - X_1$ $X_0 - X_2$	$\frac{V_H \bullet \sqrt{3}}{V_X}$
16	Dy11	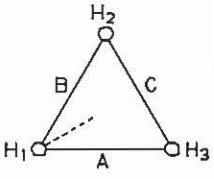	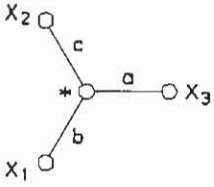	A B C	$H_3 - H_2$ $H_1 - H_3$ $H_2 - H_1$	$H_1 - H_3$ $H_2 - H_1$ $H_3 - H_2$	$* - X_3$ $* - X_1$ $* - X_2$	$\frac{V_H \bullet \sqrt{3}}{V_X}$
17	Dz0	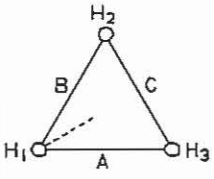	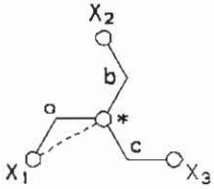	A B C	—	$H_1 - H_3$ $H_2 - H_1$ $H_3 - H_2$	$X_1 - X_3$ $X_2 - X_1$ $X_3 - X_2$	$\frac{V_H}{V_X}$
18	Dz6	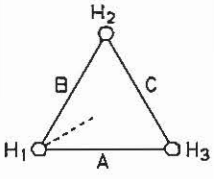	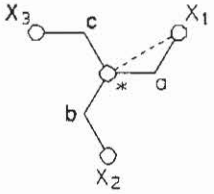	A B C	—	$H_1 - H_3$ $H_2 - H_1$ $H_3 - H_2$	$X_3 - X_1$ $X_1 - X_2$ $X_2 - X_3$	$\frac{V_H}{V_X}$
19	YNy0	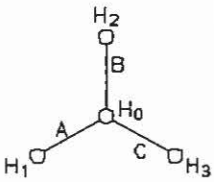	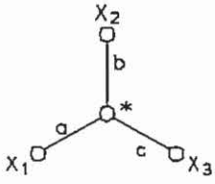	A B C	$H_2 - H_0$ $H_3 - H_0$ $H_1 - H_0$	$H_1 - H_0$ $H_2 - H_0$ $H_3 - H_0$	$X_1 - *$ $X_2 - *$ $X_3 - *$	$\frac{V_H}{V_X}$

Megger.

Table 5-2. ANSI Transformer Winding Phase Relationship

Copyright 1999© Megger

Diag No.	IEC Vector Group	Winding Connection: High-Voltage Winding	Winding Connection: Low-Voltage Winding	Phase Tested	External Jumpers	Winding Tested: High-Voltage Winding	Winding Tested: Low-Voltage Winding	Measured Turn Ratio
20	Yyn0	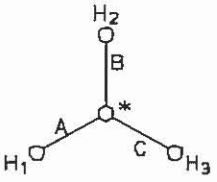	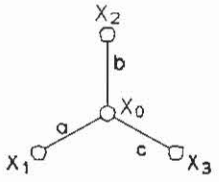	A B C	—	$H_1 - H_3$ $H_2 - H_1$ $H_3 - H_2$	$X_1 - X_3$ $X_2 - X_1$ $X_3 - X_2$	$\frac{V_H}{V_X}$
21	Yy0	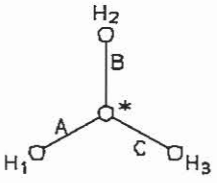	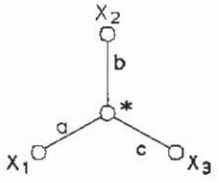	A B C	—	$H_1 - H_3$ $H_2 - H_1$ $H_3 - H_2$	$X_1 - X_3$ $X_2 - X_1$ $X_3 - X_2$	$\frac{V_H}{V_X}$
22	YNy6	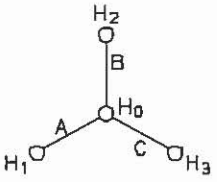	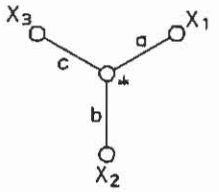	A B C	$H_2 - H_0$ $H_3 - H_0$ $H_1 - H_0$	$H_1 - H_0$ $H_2 - H_0$ $H_3 - H_0$	$* - X_1$ $* - X_2$ $* - X_3$	$\frac{V_H}{V_X}$
23	Yyn6	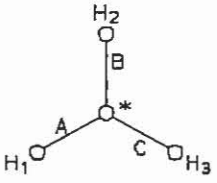	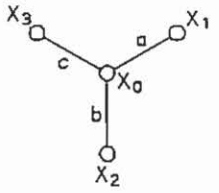	A B C	—	$H_1 - H_3$ $H_2 - H_1$ $H_3 - H_2$	$X_3 - X_1$ $X_1 - X_2$ $X_2 - X_3$	$\frac{V_H}{V_X}$
24	Yy6	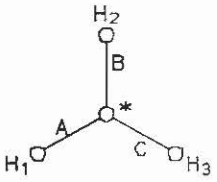	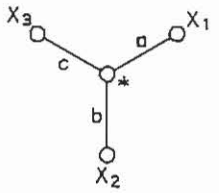	A B C	—	$H_1 - H_3$ $H_2 - H_1$ $H_3 - H_2$	$X_3 - X_1$ $X_1 - X_2$ $X_2 - X_3$	$\frac{V_H}{V_X}$
25	Yzn1	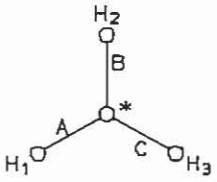	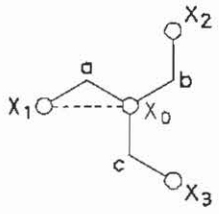	A B C	—	$H_1 - H_3$ $H_2 - H_1$ $H_3 - H_2$	$X_1 - X_0$ $X_2 - X_0$ $X_3 - X_0$	$\frac{V_H \bullet \sqrt{3}}{V_X}$

Table 5-2. ANSI Transformer Winding Phase Relationship

Copyright 1999© Megger

Diag No.	IEC Vector Group	Winding Connection: High-Voltage Winding	Winding Connection: Low-Voltage Winding	Phase Tested	External Jumpers	Winding Tested: High-Voltage Winding	Winding Tested: Low-Voltage Winding	Measured Turn Ratio
26	Yz1	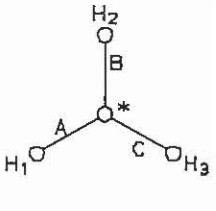	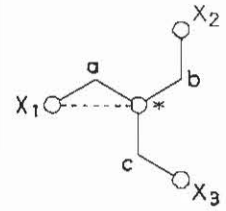	A B C	$H_3 - H_2$ $H_1 - H_3$ $H_2 - H_1$	$H_1-(H_3+H_2)$ $H_2 (H_1+H_3)$ $H_3-(H_2+H_1)$	$X_1 - X_2$ $X_2 - X_3$ $X_3 - X_1$	$\frac{V_H}{V_X} \bullet \frac{\sqrt{3}}{2}$
27	Yzn5	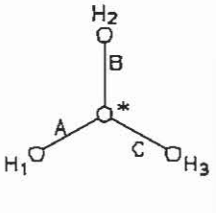	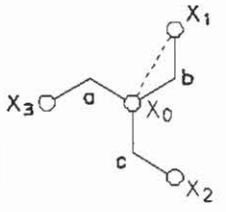	A B C	—	$H_1 - H_3$ $H_2 - H_1$ $H_3 - H_2$	$X_3 - X_0$ $X_1 - X_0$ $X_2 - X_0$	$\frac{V_H \bullet \sqrt{3}}{V_X}$
28	Yz5	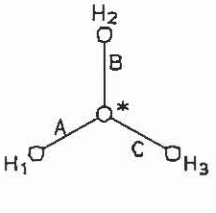	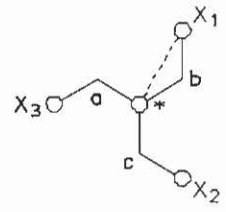	A B C	$H_3 - H_2$ $H_1 - H_3$ $H_2 - H_1$	$H_1-(H_3+H_2)$ $H_2-(H_1+H_3)$ $H_3-(H_2+H_1)$	$X_3 - X_1$ $X_1 - X_2$ $X_2 - X_3$	$\frac{V_H}{V_X} \bullet \frac{\sqrt{3}}{2}$
29	Yzn7	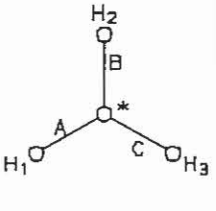	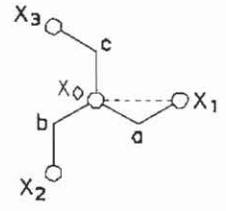	A B C	—	$H_1 - H_3$ $H_2 - H_1$ $H_3 - H_2$	$X_0 - X_1$ $X_0 - X_2$ $X_0 - X_3$	$\frac{V_H \bullet \sqrt{3}}{V_X}$
30	Yz7	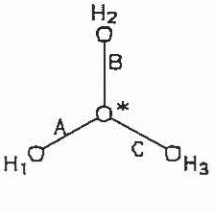	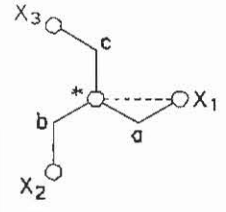	A B C	$H_3 - H_2$ $H_1 - H_3$ $H_2 - H_1$	$H_1-(H_3+H_2)$ $H_2-(H_1+H_3)$ $H_3-(H_2+H_1)$	$X_2 - X_1$ $X_3 - X_2$ $X_1 - X_3$	$\frac{V_H}{V_X} \bullet \frac{\sqrt{3}}{2}$

Megger.

Table 5-2. ANSI Transformer Winding Phase Relationship

Copyright 1999© Megger

Diag No.	IEC Vector Group	Winding Connection: High-Voltage Winding	Winding Connection: Low-Voltage Winding	Phase Tested	External Jumpers	Winding Tested: High-Voltage Winding	Winding Tested: Low-Voltage Winding	Measured Turn Ratio
31	Yzn11	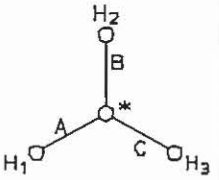	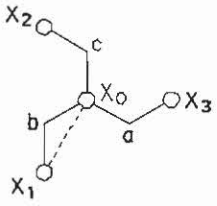	A B C	—	$H_1 - H_0$ $H_2 - H_1$ $H_3 - H_2$	$X_0 - X_3$ $X_0 - X_1$ $X_0 - X_2$	$\frac{V_H \bullet \sqrt{3}}{V_X}$
32	Yz11	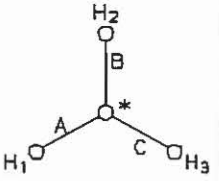	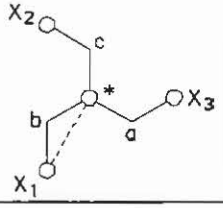	A B C	$H_3 - H_2$ $H_1 - H_3$ $H_2 - H_1$	$H_1-(H_3+H_2)$ $H_2-(H_1+H_3)$ $H_3-(H_2+H_1)$	$X_1 - X_3$ $X_2 - X_1$ $X_3 - X_2$	$\frac{V_H}{V_X} \bullet \frac{\sqrt{3}}{2}$
33	ZNy5	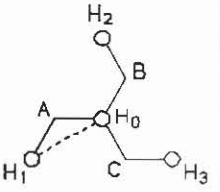	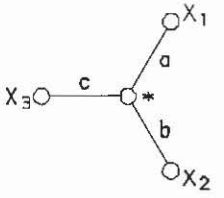	A B C	—	$H_1 - H_0$ $H_2 - H_0$ $H_3 - H_0$	$X_3 - X_1$ $X_1 - X_2$ $X_2 - X_3$	$\frac{V_H}{V_X \bullet \sqrt{3}}$
34	Zy5	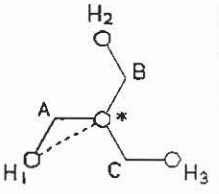	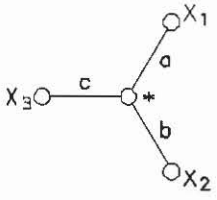	A B C	$H_3 - H_2$ $H_1 - H_3$ $H_2 - H_1$	$H_1-(H_3+H_2)$ $H_2-(H_1+H_3)$ $H_3-(H_2+H_1)$	$X_3 - X_1$ $X_1 - X_2$ $X_2 - X_3$	$\frac{V_H}{V_X} \bullet \frac{\sqrt{3}}{2}$
35	ZNy11	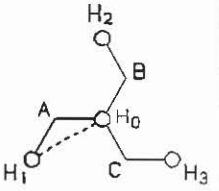	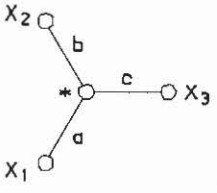	A B C	—	$H_1 - H_0$ $H_2 - H_0$ $H_3 - H_0$	$X_1 - X_3$ $X_2 - X_1$ $X_3 - X_2$	$\frac{V_H}{V_X \bullet \sqrt{3}}$
36	Zy11	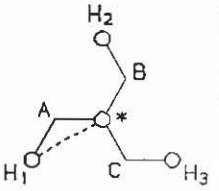	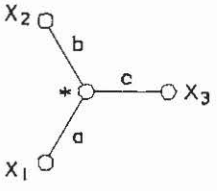	A B C	$H_3 - H_2$ $H_1 - H_3$ $H_2 - H_1$	$H_1-(H_3+H_2)$ $H_2-(H_1+H_3)$ $H_3-(H_2+H_1)$	$X_1 - X_3$ $X_2 - X_1$ $X_3 - X_2$	$\frac{V_H}{V_X} \bullet \frac{\sqrt{3}}{2}$

Table 5-2. ANSI Transformer Winding Phase Relationship

Copyright 1999© Megger

Diag No.	IEC Vector Group	Winding Connection		Phase Tested	External Jumpers	Winding Tested		Measured Turn Ratio
		High-Voltage Winding	Low-Voltage Winding			High-Voltage Winding	Low-Voltage Winding	
37	Yd1	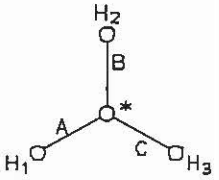	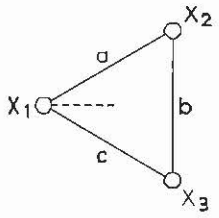	A B C	$H_3 - H_2$ $H_1 - H_3$ $H_2 - H_1$	$H_1-(H_3+H_2)$ $H_2-(H_1+H_3)$ $H_3-(H_2+H_1)$	$X_1 - X_2$ $X_2 - X_3$ $X_3 - X_1$	$\frac{V_H}{V_X} \bullet \frac{\sqrt{3}}{2}$
38	YNd5	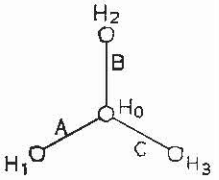	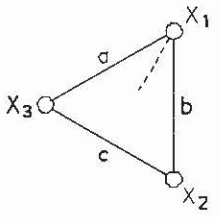	A B C	—	$H_1 - H_0$ $H_2 - H_0$ $H_3 - H_0$	$X_3 - X_1$ $X_1 - X_2$ $X_2 - X_3$	$\frac{V_H}{V_X \bullet \sqrt{3}}$
39	Yd5	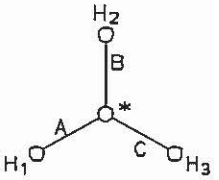	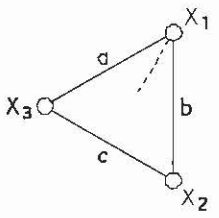	A B C	$H_3 - H_2$ $H_1 - H_3$ $H_2 - H_1$	$H_1-(H_3+H_2)$ $H_2-(H_1+H_3)$ $H_3-(H_2+H_1)$	$X_3 - X_1$ $X_1 - X_2$ $X_2 - X_3$	$\frac{V_H}{V_X} \bullet \frac{\sqrt{3}}{2}$
40	Yd7	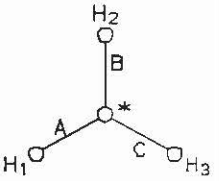	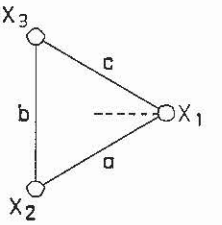	A B C	$H_3 - H_2$ $H_1 - H_3$ $H_2 - H_1$	$H_1-(H_3+H_2)$ $H_2-(H_1+H_3)$ $H_3-(H_2+H_1)$	$X_2 - X_1$ $X_3 - X_2$ $X_1 - X_3$	$\frac{V_H}{V_X} \bullet \frac{\sqrt{3}}{2}$
41	YNd11	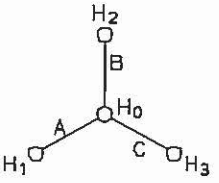	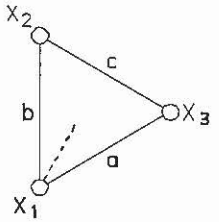	A B C	—	$H_1 - H_0$ $H_2 - H_0$ $H_3 - H_0$	$X_1 - X_3$ $X_2 - X_1$ $X_3 - X_2$	$\frac{V_H}{V_X \bullet \sqrt{3}}$

Megger.

Table 5-2. ANSI Transformer Winding Phase Relationship

Copyright 1999© Megger

Diag No.	IEC Vector Group	Winding Connection: High-Voltage Winding	Winding Connection: Low-Voltage Winding	Phase Tested	External Jumpers	Winding Tested: High-Voltage Winding	Winding Tested: Low-Voltage Winding	Measured Turn Ratio
42	Yd11	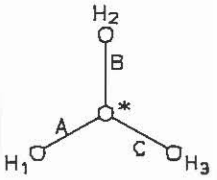	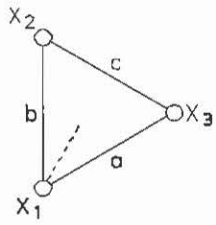	A B C	$H_3 - H_2$ $H_1 - H_3$ $H_2 - H_1$	$H_1-(H_3+H_2)$ $H_2-(H_1+H_3)$ $H_3-(H_2+H_1)$	$X_1 - X_3$ $X_2 - X_1$ $X_3 - X_2$	$\frac{V_H}{V_X} \bullet \frac{\sqrt{3}}{2}$

Notes to Table 5-3

Transformer terminal markings for power transformers marked in accordance with requirements of International Standard CEI/IEC 76-1:1993.

Definition of Symbol Designations

1U, 1V, 1W	External terminals on HV transformer winding (alternate notation U, V, W).
2U, 2V, 2W	External terminals on LV transformer winding (alternate notation u, v, w).
1N	External neutral terminal on HV transformer winding (alternate notation N).
2N	External neutral terminal on LV transformer winding (alternate notation n).
*	Inaccessible neutral point on HV or LV transformer winding.
U1	Nameplate voltage rating (line-to-line) of HV transformer winding.
U2	Nameplate voltage rating (line-to-line) of LV transformer winding.
U, V, W	Phase tested.

Table 5-3. CEI/IEC 76-1:1993 Transformer Winding Phase Relationship

Copyright 1999© Megger

Diag No.	IEC Vector Group	Winding Connection: High-Voltage Winding	Winding Connection: Low-Voltage Winding	Phase Tested	External Jumpers	Winding Tested: High-Voltage Winding	Winding Tested: Low-Voltage Winding	Measured Turn Ratio
1	1ϕ 1ph0			1ϕ	—	1.1-1.2	2.1-2.2	U1/U2
2	1ϕ 1ph6			1ϕ	—	1.1-1.2	2.2-2.1	U1/U2
3	Dd0	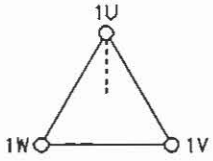	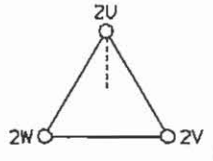	U V W	— — —	1U-1V 1V-1W 1W-1U	2U-2V 2V-2W 2W-2U	U1/U2
4	Dd2	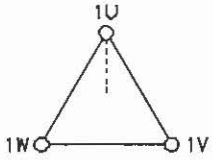	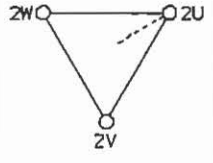	U V W	— — —	1U-1V 1V-1W 1W-1U	2W-2V 2U-2W 2V-2U	U1/U2
5	Dd4	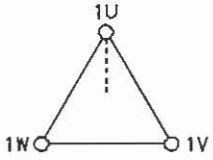	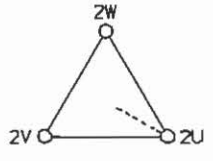	U V W	— — —	1U-1V 1V-1W 1W-1U	2W-2U 2U-2V 2V-2W	U1/U2
6	Dd6	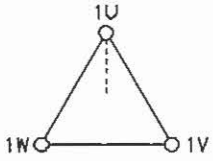	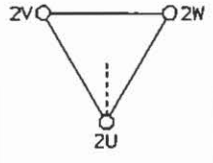	U V W	— — —	1U-1V 1V-1W 1W-1U	2V-2U 2W-2V 2U-2W	U1/U2
7	Dd8	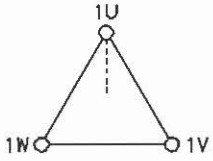	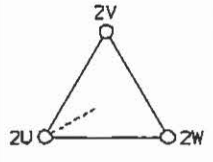	U V W	— — —	1U-1V 1V-1W 1W-1U	2V-2W 2W-2U 2U-2V	U1/U2
8	Dd10	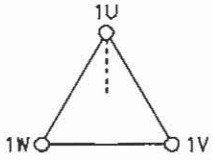	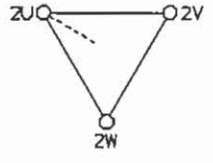	U V W	— — —	1U-1V 1V-1W 1W-1U	2U-2W 2V-2U 2W-2V	U1/U2

Megger.

Table 5-3. CEI/IEC 76-1:1993 Transformer Winding Phase Relationship

Copyright 1999© Megger

Diag No.	IEC Vector Group	Winding Connection		Phase Tested	External Jumpers	Winding Tested		Measured Turn Ratio
		High-Voltage Winding	Low-Voltage Winding			High-Voltage Winding	Low-Voltage Winding	
9	Dyn1	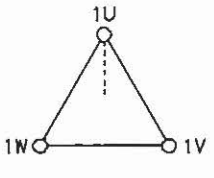	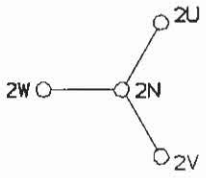	U V W	— — —	1U-1W 1V-1U 1W-1V	2U-2N 2V-2N 2W-2N	$\frac{U1 \bullet \sqrt{3}}{U2}$
10	Dy1	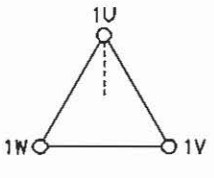	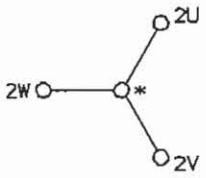	U V W	1V-1W 1W-1U 1U-1V	1U-1W 1V-1U 1W-1V	2U-* 2V-* 2W-*	$\frac{U1 \bullet \sqrt{3}}{U2}$
11	Dyn5	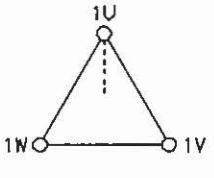	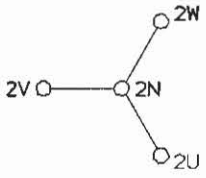	U V W	— — —	1V-1U 1W-1V 1U-1W	2U-2N 2V-2N 2W-2N	$\frac{U1 \bullet \sqrt{3}}{U2}$
12	Dy5	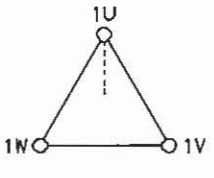	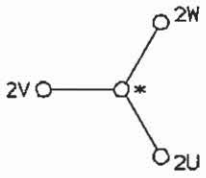	U V W	1V-1W 1W-1U 1U-1V	1V-1U 1W-1V 1U-1W	2U-* 2V-* 2W-*	$\frac{U1 \bullet \sqrt{3}}{U2}$
13	Dyn7	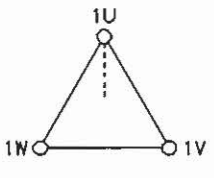	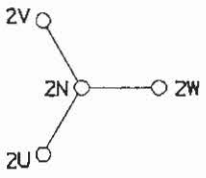	U V W	— — —	1W-1U 1U-1V 1V-1W	2U-2N 2V-2N 2W-2N	$\frac{U1 \bullet \sqrt{3}}{U2}$
14	Dy7	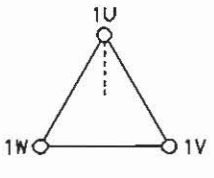	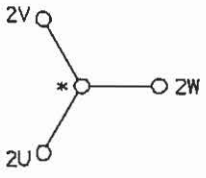	U V W	1V-1W 1W-1U 1U-1V	1W-1U 1U-1V 1V-1W	2U-* 2V-* 2W-*	$\frac{U1 \bullet \sqrt{3}}{U2}$

Table 5-3. CEI/IEC 76-1:1993 Transformer Winding Phase Relationship

Copyright 1999© Megger

Diag No.	IEC Vector Group	Winding Connection: High-Voltage Winding	Winding Connection: Low-Voltage Winding	Phase Tested	External Jumpers	Winding Tested: High-Voltage Winding	Winding Tested: Low-Voltage Winding	Measured Turn Ratio
15	Dyn11	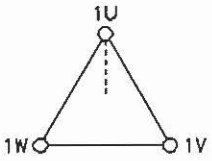	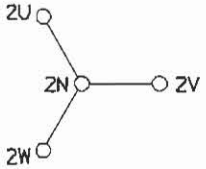	U V W	— — —	1U-1V 1V-1W 1W-1U	2U-2N 2V-2N 2W-2N	$\frac{U1 \cdot \sqrt{3}}{U2}$
16	Dy11	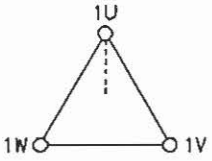	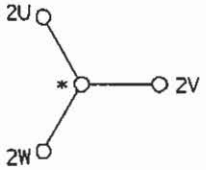	U V W	1V-1W 1W-1U 1U-1V	1U-1V 1V-1W 1W-1U	2U-* 2V-* 2W-*	$\frac{U1 \cdot \sqrt{3}}{U2}$
17	Dzn0	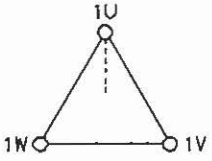	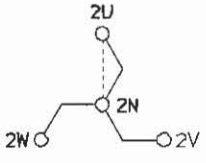	U V W	1V-1W 1W-1U 1U-1V	1U-(1V+1W) 1V-(1W+1U) 1W-(1U+1V)	2U-2N 2V-2N 2W-2N	$\frac{1.5U1}{U2}$
18	Dz0	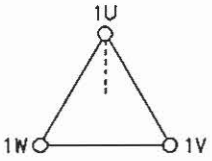	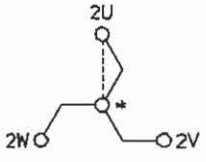	U V W	— — —	1U-1V 1V-1W 1W-1U	2U-2V 2V-2W 2W-2U	$\frac{U1}{U2}$
19	Dzn2	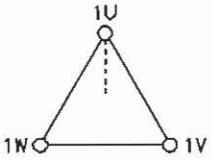	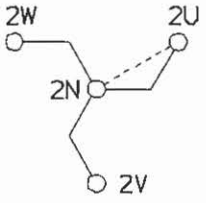	U V W	1V-1W 1W-1U 1U-1V	1U-(1V+1W) 1V-(1W+1U) 1W-(1U+1V)	2N-2V 2N-2W 2N-2U	$\frac{1.5U1}{U2}$
20	Dz2	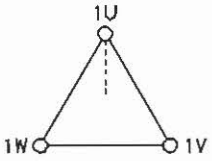	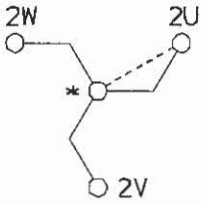	U V W	— — —	1U-1V 1V-1W 1W-1U	2W-2V 2U-2W 2V-2U	$\frac{U1}{U2}$

Megger.

Table 5-3. CEI/IEC 76-1:1993 Transformer Winding Phase Relationship

Copyright 1999© Megger

Diag No.	IEC Vector Group	Winding Connection		Phase Tested	External Jumpers	Winding Tested		Measured Turn Ratio
		High-Voltage Winding	Low-Voltage Winding			High-Voltage Winding	Low-Voltage Winding	
21	Dzn4	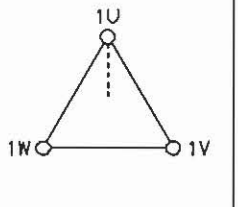	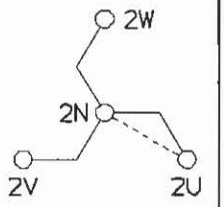	U V W	1V-1W 1W-1U 1U-1V	1U-(1V+1W) 1V-(1W+1U) 1W-(1U+1V)	2W-2N 2U-2N 2V-2N	1.5U1 / U2
22	Dz4	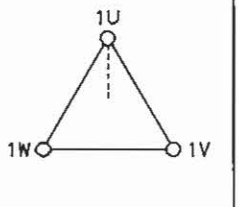	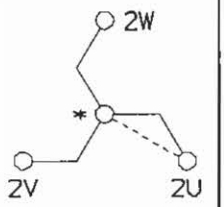	U V W	— — —	1U-1V 1V-1W 1W-1U	2W-2U 2U-2V 2V-2W	U1 / U2
23	Dzn6	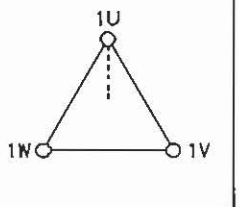	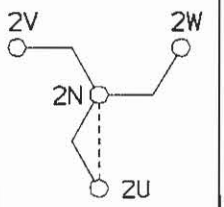	U V W	1V-1W 1W-1U 1U-1V	1U-(1V+1W) 1V-(1W+1U) 1W-(1U+1V)	2N-2U 2N-2V 2N-2W	1.5U1 / U2
24	Dz6	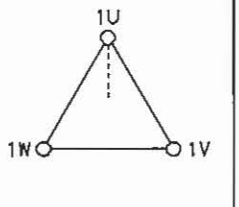	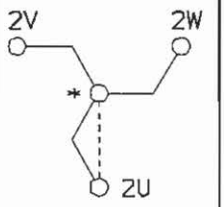	U V W	— — —	1U-1V 1V-1W 1W-1U	2V-2U 2W-2V 2U-2W	U1 / U2
25	Dzn8	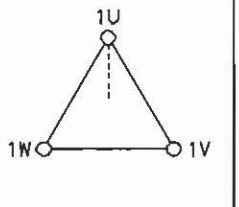	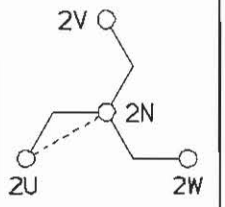	U V W	1V-1W 1W-1U 1U-1V	1U-(1V+1W) 1V-(1W+1U) 1W-(1U+1V)	2V-2N 2W-2N 2U-2N	1.5U1 / U2
26	Dz8	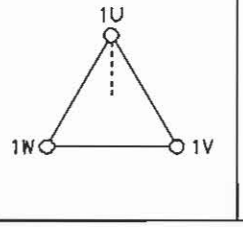	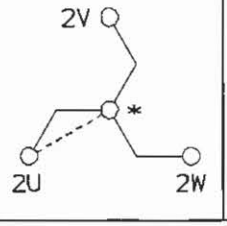	U V W	— — —	1U-1V 1V-1W 1W-1U	2V-2W 2W-2U 2U-2V	U1 / U2

Table 5-3. CEI/IEC 76-1:1993 Transformer Winding Phase Relationship

Copyright 1999© Megger

Diag No.	IEC Vector Group	Winding Connection: High-Voltage Winding	Winding Connection: Low-Voltage Winding	Phase Tested	External Jumpers	Winding Tested: High-Voltage Winding	Winding Tested: Low-Voltage Winding	Measured Turn Ratio
27	Dzn10	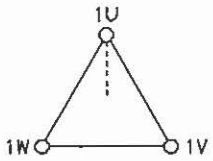	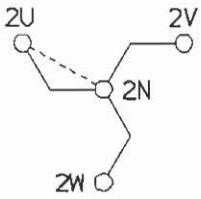	U V W	1V-1W 1W-1U 1U-1V	1U-(1V+1W) 1V-(1W+1U) 1W-(1U+1V)	2N-2W 2N-2U 2N-2V	$\frac{1.5U1}{U2}$
28	Dz10	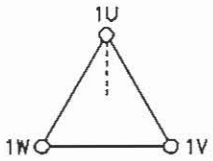	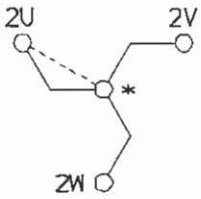	U V W	— — —	1U-1V 1V-1W 1W-1U	2U-2W 2V-2U 2W-2V	$\frac{U1}{U2}$
29	YNyn0	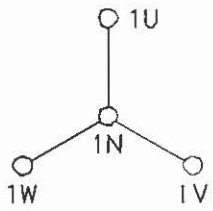	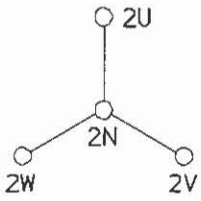	U V W	— — —	1U-1N 1V-1N 1W-1N	2U-2N 2V-2N 2W-2N	$\frac{U1}{U2}$
30	YNy0	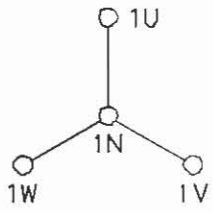	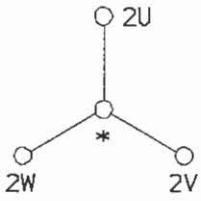	U V W	1V-1N 1W-1N 1U-1N	1U-1N 1V-1N 1W-1N	2U-* 2V-* 2W-*	$\frac{U1}{U2}$
31	Yyn0	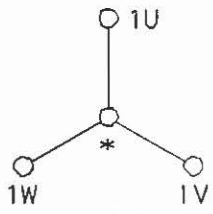	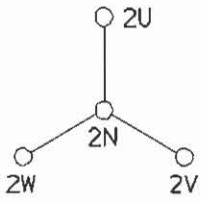	U V W	— — —	1U-1V 1V-1W 1W-1U	2U-2V 2V-2W 2W-2U	$\frac{U1}{U2}$
32	Yy0	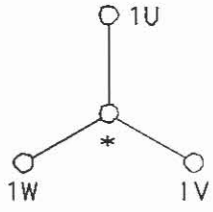	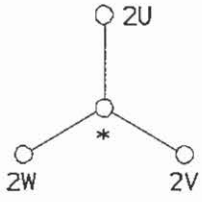	U V W	— — —	1U-1V 1V-1W 1W-1U	2U-2V 2V-2W 2W-2U	$\frac{U1}{U2}$

Megger.

Table 5-3. CEI/IEC 76-1:1993 Transformer Winding Phase Relationship

Copyright 1999© Megger

Diag No.	IEC Vector Group	Winding Connection: High-Voltage Winding	Winding Connection: Low-Voltage Winding	Phase Tested	External Jumpers	Winding Tested: High-Voltage Winding	Winding Tested: Low-Voltage Winding	Measured Turn Ratio
33	YNyn6	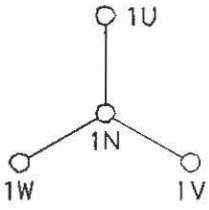	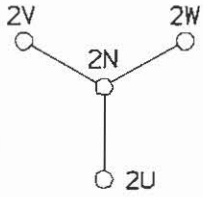	U V W	— — —	1U-1N 1V-1N 1W-1N	2N-2U 2N-2V 2N-2W	$\frac{U1}{U2}$
34	YNy6	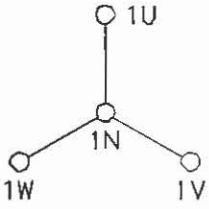	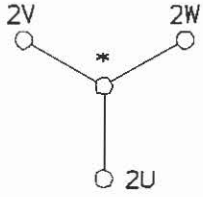	U V W	1V-1N 1W-1N 1U-1N	1U-1N 1V-1N 1W-1N	*-2U *-2V *-2W	$\frac{U1}{U2}$
35	Yyn6	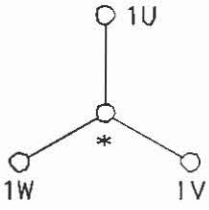	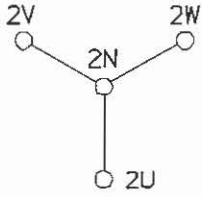	U V W	— — —	1U-1V 1V-1W 1W-1U	2V-2U 2W-2V 2U-2W	$\frac{U1}{U2}$
36	Yy6	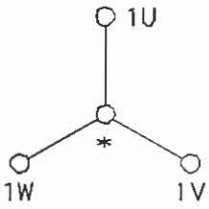	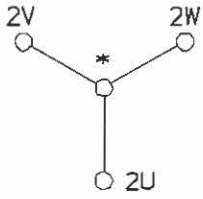	U V W	— — —	1U-1V 1V-1W 1W-1U	2V-2U 2W-2V 2U-2W	$\frac{U1}{U2}$
37	Yzn1	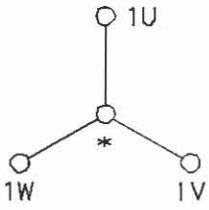	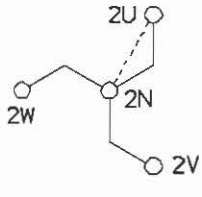	U V W	— — —	1U-1W 1V-1U 1W-1V	2U-2N 2V-2N 2W-2N	$\frac{U1 \cdot \sqrt{3}}{U2}$

Table 5-3. CEI/IEC 76-1:1993 Transformer Winding Phase Relationship

Copyright 1999© Megger

Diag No.	IEC Vector Group	Winding Connection: High-Voltage Winding	Winding Connection: Low-Voltage Winding	Phase Tested	External Jumpers	Winding Tested: High-Voltage Winding	Winding Tested: Low-Voltage Winding	Measured Turn Ratio
38	Yz1	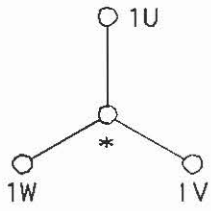	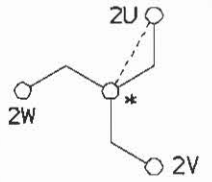	U V W	1V-1W 1W-1U 1U-1V	1U-(1V+1W) 1V-(1W+1U) 1W-(1U+1V)	2U-2V 2V-2W 2W-2U	$\frac{U1}{U2} \cdot \frac{\sqrt{3}}{2}$
39	Yzn5	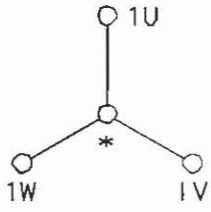	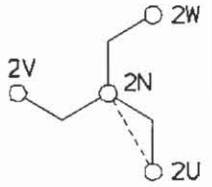	U V W	— — —	1U-1V 1V-1W 1W-1U	2N-2U 2N-2V 2N-2W	$\frac{U1 \cdot \sqrt{3}}{U2}$
40	Yz5	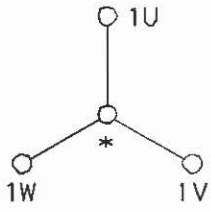	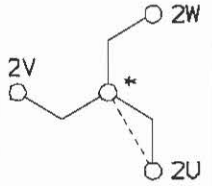	U V W	1V-1W 1W-1U 1U-1V	1U-(1V+1W) 1V-(1W+1U) 1W-(1U+1V)	2W-2U 2U-2V 2V-2W	$\frac{U1}{U2} \cdot \frac{\sqrt{3}}{2}$
41	Yzn7	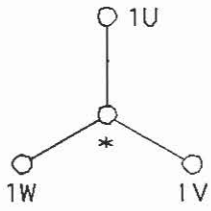	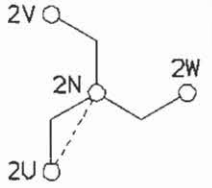	U V W	— — —	1U-1V 1V-1W 1W-1U	2V-2N 2W-2N 2U-2N	$\frac{U1 \cdot \sqrt{3}}{U2}$
42	Yz7	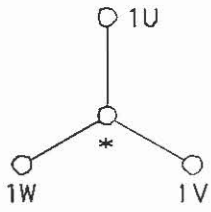	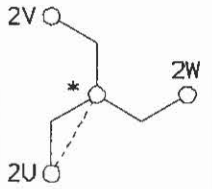	U V W	1V-1W 1W-1U 1U-1V	1U-(1V+1W) 1V-(1W+1U) 1W-(1U+1V)	2V-2U 2W-2V 2U-2W	$\frac{U1}{U2} \cdot \frac{\sqrt{3}}{2}$

Megger.

Table 5-3. CEI/IEC 76-1:1993 Transformer Winding Phase Relationship

Copyright 1999© Megger

Diag No.	IEC Vector Group	Winding Connection		Phase Tested	External Jumpers	Winding Tested		Measured Turn Ratio
		High-Voltage Winding	Low-Voltage Winding			High-Voltage Winding	Low-Voltage Winding	
43	Yzn11	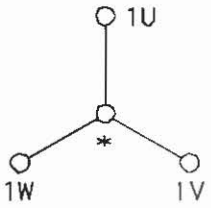	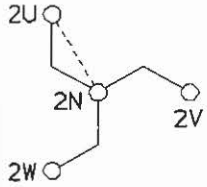	U V W	— — —	1U-1V 1V-1W 1W-1U	2U-2N 2V-2N 2W-2N	$\frac{U1 \bullet \sqrt{3}}{U2}$
44	Yz11	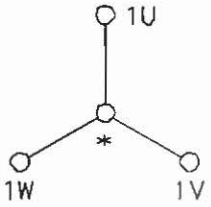	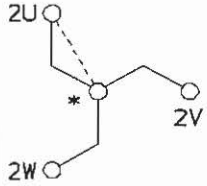	U V W	1V-1W 1W-1U 1U-1V	1U-(1V+1W) 1V-(1W+1U) 1W-(1U+1V)	2U-2W 2V-2U 2W-2V	$\frac{U1}{U2} \bullet \frac{\sqrt{3}}{2}$
45	YNd1	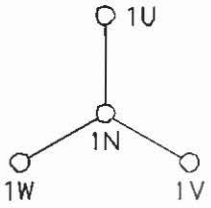	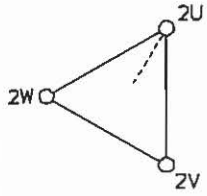	U V W	— — —	1U-1N 1V-1N 1W-1N	2U-2V 2V-2W 2W-2U	$\frac{UI}{U2 \bullet \sqrt{3}}$
46	Yd1	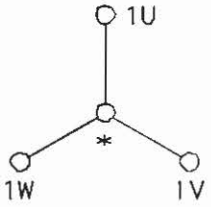	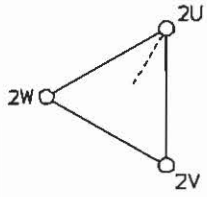	U V W	1V-1W 1W-1U 1U-1V	1U-(1V+1W) 1V-(1W+1U) 1W-(1U+1V)	2U-2V 2V-2W 2W-2U	$\frac{U1}{U2} \bullet \frac{\sqrt{3}}{2}$
47	YNd5	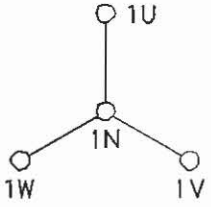	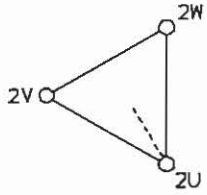	U V W	— — —	1U-1N 1V-1N 1W-1N	2W-2U 2U-2V 2V-2W	$\frac{UI}{U2 \bullet \sqrt{3}}$

Table 5-3. CEI/IEC 76-1:1993 Transformer Winding Phase Relationship

Copyright 1999© Megger

Diag No.	IEC Vector Group	Winding Connection		Phase Tested	External Jumpers	Winding Tested		Measured Turn Ratio
		High-Voltage Winding	Low-Voltage Winding			High-Voltage Winding	Low-Voltage Winding	
48	Yd5	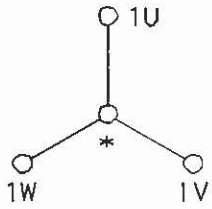	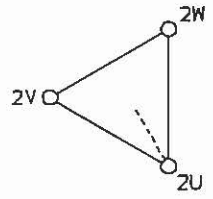	U V W	1V-1W 1W-1U 1U-1V	1U-(1V+1W) 1V-(1W+1U) 1W-(1U+1V)	2W-2U 2U-2V 2V-2W	$\frac{U1}{U2} \bullet \frac{\sqrt{3}}{2}$
49	YNd7	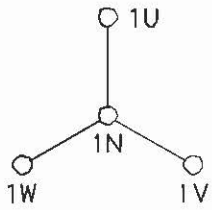	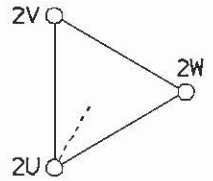	U V W	— — —	1U-1N 1V-1N 1W-1N	2V-2U 2W-2V 2U-2W	$\frac{U1}{U2 \bullet \sqrt{3}}$
50	Yd7	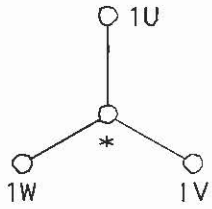	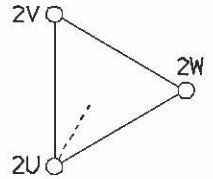	U V W	1V-1W 1W-1U 1U-1V	1U-(1V+1W) 1V-(1W+1U) 1W-(1U+1V)	2V-2U 2W-2V 2U-2W	$\frac{U1}{U2} \bullet \frac{\sqrt{3}}{2}$
51	YNd11	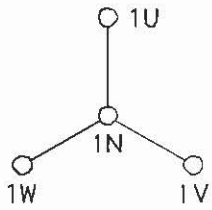	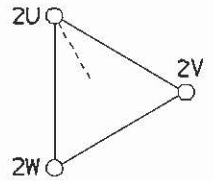	U V W	— — —	1U-1N 1V-1N 1W-1N	2U-2W 2V-2U 2W-2V	$\frac{U1}{U2 \bullet \sqrt{3}}$
52	Yd11	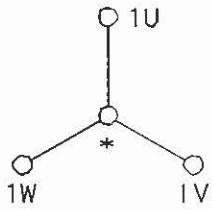	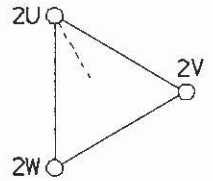	U V W	1V-1W 1W-1U 1U-1V	1U-(1V+1W) 1V-(1W+1U) 1W-(1U+1V)	2U-2W 2V-2U 2W-2V	$\frac{U1}{U2} \bullet \frac{\sqrt{3}}{2}$

Notes to Table 5-4

Transformer terminal markings for power transformers marked in accordance with requirements of Australian Standard 2374, Part 4-1982.

Definition of Symbol Designations

A_2, B_2, C_2	External terminals on HV transformer winding (A_x, B_x, C_x).
a_2, b_2, c_2	External terminals on LV transformer winding (a_x, b_x, c_x).
N	External neutral terminal on HV transformer winding.
n	External neutral terminal on LV transformer winding.
*	Inaccessible neutral point on HV or LV transformer winding.
HV	Nameplate voltage rating (line-to-line) of HV transformer winding.
LV	Nameplate voltage rating (line-to-line) of LV transformer winding.
A, B, C	Winding tested on HV side of transformer.
a, b, c	Winding tested on LV side of transformer.

Table 5-4. Transformer Winding Phase Relationship (Australian Std. 2374, Part 4 - 1982)

Copyright 1999© Megger

Diag No.	IEC Vector Group	Winding Connection		Phase Tested	External Jumpers	Winding Tested		Measured Turn Ratio
		High-Voltage Winding	Low-Voltage Winding			High-Voltage Winding	Low-Voltage Winding	
1	1ϕ 1ph0			1ϕ	—	A_2 - A_1	a_2 - a_1	$\frac{HV}{LV}$
2	1ϕ 1ph6			1ϕ	—	A_2 - A_1	a_1 - a_2	$\frac{HV}{LV}$
3	Dd0	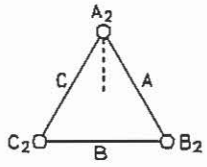	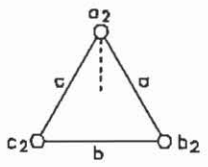	A B C	— — —	A_2 - B_2 B_2 - C_2 C_2 - A_2	a_2 - b_2 b_2 - c_2 c_2 - a_2	$\frac{HV}{LV}$
4	Dd6	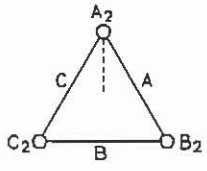	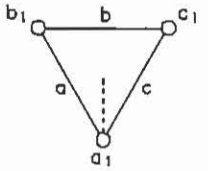	A B C	— — —	A_2 - B_2 B_2 - C_2 C_2 - A_2	b_1 - a_1 c_1 - b_1 a_1 - c_1	$\frac{HV}{LV}$
5	Dyn1	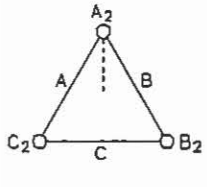	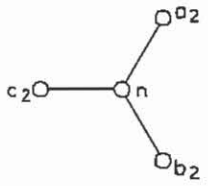	A B C	— — —	A_2 - C_2 B_2 - A_2 C_2 - B_2	a_2 - n b_2 - n c_2 - n	$\frac{HV \bullet \sqrt{3}}{LV}$
6	Dy1	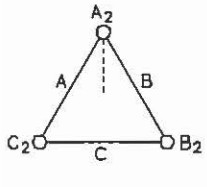	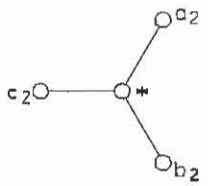	A B C	B_2 - C_2 C_2 - A_2 A_2 - B_2	A_2 - C_2 B_2 - A_2 C_2 - B_2	a_2 - * b_2 - * c_2 - *	$\frac{HV \bullet \sqrt{3}}{LV}$
7	Dyn11	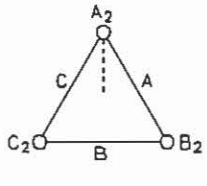	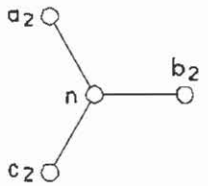	A B C	— — —	A_2 - B_2 B_2 - C_2 C_2 - A_2	a_2 - n b_2 - n c_2 - n	$\frac{HV \bullet \sqrt{3}}{LV}$

Megger.

Table 5-4. Transformer Winding Phase Relationship (Australian Std. 2374, Part 4 - 1982)

Copyright 1999© Megger

Diag No.	IEC Vector Group	Winding Connection: High-Voltage Winding	Winding Connection: Low-Voltage Winding	Phase Tested	External Jumpers	Winding Tested: High-Voltage Winding	Winding Tested: Low-Voltage Winding	Measured Turn Ratio
8	Dy11	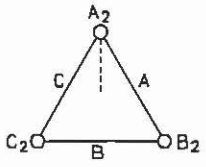	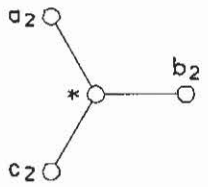	A B C	$B_2 - C_2$ $C_2 - A_2$ $A_2 - B_2$	$A_2 - B_2$ $B_2 - C_2$ $C_2 - A_2$	$a_2 - *$ $b_2 - *$ $c_2 - *$	$\frac{HV \bullet \sqrt{3}}{LV}$
9	Dzn0	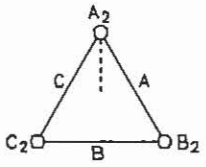	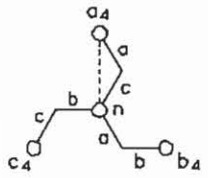	A B C	$B_2 - C_2$ $C_2 - A_2$ $A_2 - B_2$	$A_2 - (B_2+C_2)$ $B_2 - (C_2+A_2)$ $C_2 - (A_2+B_2)$	$a_4 - n$ $b_4 - n$ $c_4 - n$	$\frac{1.5\ HV}{LV}$
10	Dz0	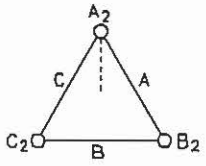	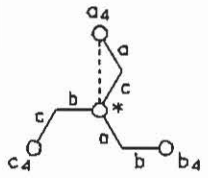	A B C	— — —	$A_2 - B_2$ $B_2 - C_2$ $C_2 - A_2$	$a_4 - b_4$ $b_4 - c_4$ $c_4 - a_4$	$\frac{HV}{LV}$
11	Dzn6	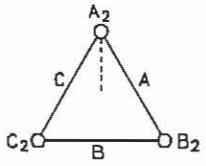	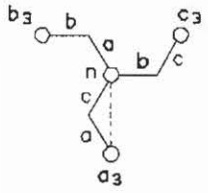	A B C	$B_2 - C_2$ $C_2 - A_2$ $A_2 - B_2$	$A_2 - (B_2+C_2)$ $B_2 - (C_2+A_2)$ $C_2 - (A_2+B_2)$	$n - a_3$ $n - b_3$ $n - c_3$	$\frac{1.5\ HV}{LV}$
12	Dz6	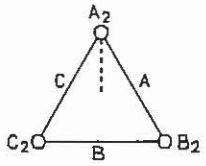	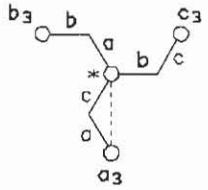	A B C	— — —	$A_2 - B_2$ $B_2 - C_2$ $C_2 - A_2$	$b_3 - a_3$ $c_3 - b_3$ $a_3 - c_3$	$\frac{HV}{LV}$
13	YNyn0	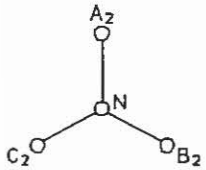	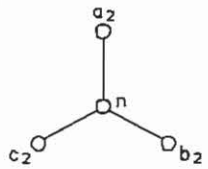	A B C	— — —	$A_2 - N$ $B_2 - N$ $C_2 - N$	$a_2 - n$ $b_2 - n$ $c_2 - n$	$\frac{HV}{LV}$

Table 5-4. Transformer Winding Phase Relationship (Australian Std. 2374, Part 4 - 1982)

Copyright 1999© Megger

Diag No.	IEC Vector Group	Winding Connection: High-Voltage Winding	Winding Connection: Low-Voltage Winding	Phase Tested	External Jumpers	Winding Tested: High-Voltage Winding	Winding Tested: Low-Voltage Winding	Measured Turn Ratio
14	YNy0	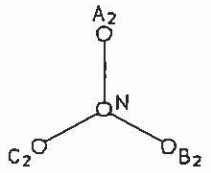	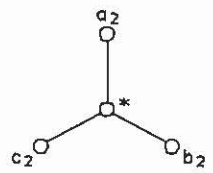	A B C	B_2 - N C_2 - N A_2 - N	A_2 - N B_2 - N C_2 - N	a_2 - * b_2 - * c_2 - *	HV / LV
15	Yyn0	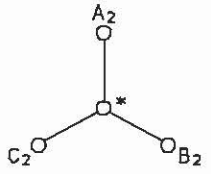	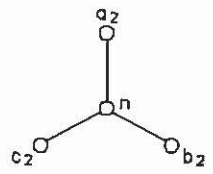	A B C	— — —	A_2 - B_2 B_2 - C_2 C_2 - A_2	a_2 - b_2 b_2 - c_2 c_2 - a_2	HV / LV
16	Yy0	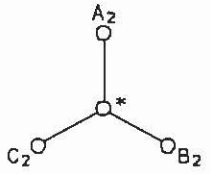	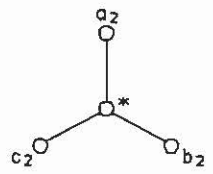	A B C	— — —	A_2 - B_2 B_2 - C_2 C_2 - A_2	a_2 - b_2 b_2 - c_2 c_2 - a_2	HV / LV
17	YNyn6	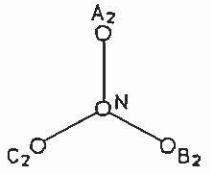	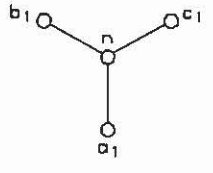	A B C	— — —	A_2 - N B_2 - N C_2 - N	n - a_1 n - b_1 n - c_1	HV / LV
18	YNy6	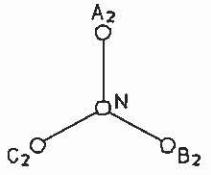	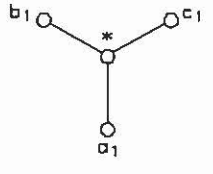	A B C	B_2 - N C_2 - N A_2 - N	A_2 - N B_2 - N C_2 - N	* - a_1 * - b_1 * - c_1	HV / LV
19	Yyn6	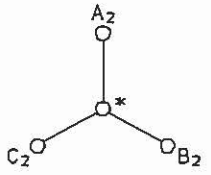	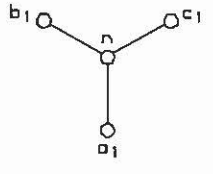	A B C	— — —	A_2 - B_2 B_2 - C_2 C_2 - A_2	b_1 - a_1 c_1 - b_1 a_1 - c_1	HV / LV

Megger.

Table 5-4. Transformer Winding Phase Relationship (Australian Std. 2374, Part 4 - 1982)

Copyright 1999© Megger

Diag No.	IEC Vector Group	Winding Connection: High-Voltage Winding	Winding Connection: Low-Voltage Winding	Phase Tested	External Jumpers	Winding Tested: High-Voltage Winding	Winding Tested: Low-Voltage Winding	Measured Turn Ratio
20	Yy6	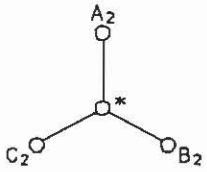	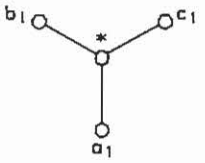	A B C	— — —	$A_2 - B_2$ $B_2 - C_2$ $C_2 - A_2$	$b_1 - a_1$ $c_1 - b_1$ $a_1 - c_1$	$\frac{HV}{LV}$
21	Yzn1	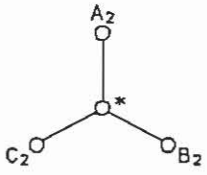	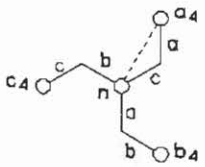	A B C	— — —	$A_2 - C_2$ $B_2 - A_2$ $C_2 - B_2$	$a_4 - n$ $b_4 - n$ $c_4 - n$	$\frac{HV \bullet \sqrt{3}}{LV}$
22	Yz1	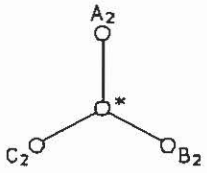	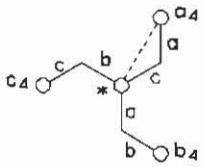	A B C	$B_2 - C_2$ $C_2 - A_2$ $A_2 - B_2$	$A_2 - (B_2+C_2)$ $B_2 - (C_2+A_2)$ $C_2 - (A_2+B_2)$	$a_4 - b_4$ $b_4 - c_4$ $c_4 - a_4$	$\frac{HV}{LV} \bullet \frac{\sqrt{3}}{2}$
23	Yzn11	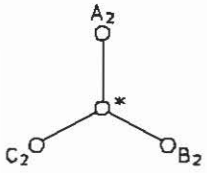	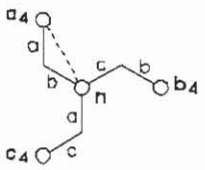	A B C	— — —	$A_2 - B_2$ $B_2 - C_2$ $C_2 - A_2$	$a_4 - n$ $b_4 - n$ $c_4 - n$	$\frac{HV \bullet \sqrt{3}}{LV}$
24	Yz11	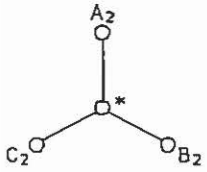	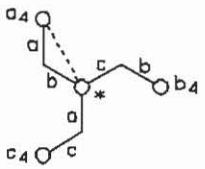	A B C	$B_2 - C_2$ $C_2 - A_2$ $A_2 - B_2$	$A_2 - (B_2+C_2)$ $B_2 - (C_2+A_2)$ $C_2 - (A_2+B_2)$	$a_4 - c_4$ $b_4 - a_4$ $c_4 - b_4$	$\frac{HV}{LV} \bullet \frac{\sqrt{3}}{2}$
25	YNd1	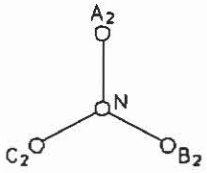	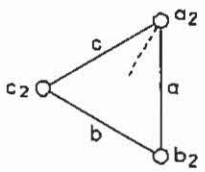	A B C	— — —	$A_2 - N$ $B_2 - N$ $C_2 - N$	$a_2 - b_2$ $b_2 - c_2$ $c_2 - a_2$	$\frac{HV}{LV \bullet \sqrt{3}}$

Table 5-4. Transformer Winding Phase Relationship (Australian Std. 2374, Part 4 - 1982)

Copyright 1999© Megger

Diag No.	IEC Vector Group	Winding Connection: High-Voltage Winding	Winding Connection: Low-Voltage Winding	Phase Tested	External Jumpers	Winding Tested: High-Voltage Winding	Winding Tested: Low-Voltage Winding	Measured Turn Ratio
26	Yd1	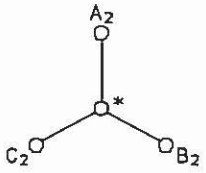	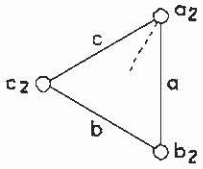	A B C	$B_2 - C_2$ $C_2 - A_2$ $A_2 - B_2$	$A_2 - (B_2+C_2)$ $B_2 - (C_2+A_2)$ $C_2 - (A_2+B_2)$	$a_2 - b_2$ $b_2 - c_2$ $c_2 - a_2$	$\frac{HV}{LV} \bullet \frac{\sqrt{3}}{2}$
27	YNd11	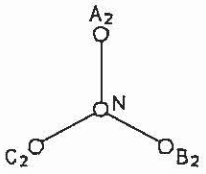	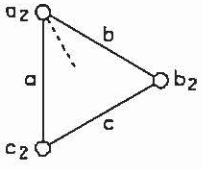	A B C	— — —	$A_2 - N$ $B_2 - N$ $C_2 - N$	$a_2 - c_2$ $b_2 - a_2$ $c_2 - b_2$	$\frac{HV}{LV \bullet \sqrt{3}}$
28	Yd11	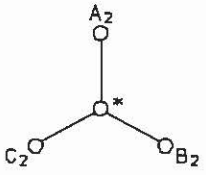	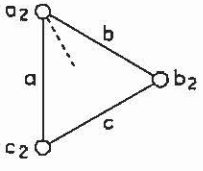	A B C	$B_2 - C_2$ $C_2 - A_2$ $A_2 - B_2$	$A_2 - (B_2+C_2)$ $B_2 - (C_2+A_2)$ $C_2 - (A_2+B_2)$	$a_2 - c_2$ $b_2 - a_2$ $c_2 - b_2$	$\frac{HV}{LV} \bullet \frac{\sqrt{3}}{2}$
29	ZNd0	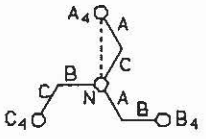	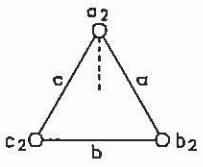	A B C	$b_2 - c_2$ $c_2 - a_2$ $a_2 - b_2$	$A_4 - N$ $B_4 - N$ $C_4 - N$	$a_2 - (b_2+c_2)$ $b_2 - (c_2+a_2)$ $c_2 - (a_2+b_2)$	$\frac{HV}{1.5\ LV}$
30	Zd0	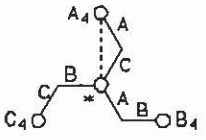	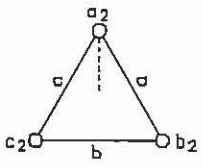	A B C	— — —	$A_4 - B_4$ $B_4 - C_4$ $C_4 - A_4$	$a_2 - b_2$ $b_2 - c_2$ $c_2 - a_2$	$\frac{HV}{LV}$
31	ZNd6	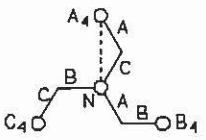	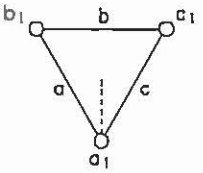	A B C	$b_1 - c_1$ $c_1 - a_1$ $a_1 - b_1$	$A_4 - N$ $B_4 - N$ $C_4 - N$	$(b_1+c_1) - a_1$ $(c_1+a_1) - b_1$ $(a_1+b_1) - c_1$	$\frac{HV}{1.5\ LV}$

Megger.

Table 5-4. Transformer Winding Phase Relationship (Australian Std. 2374, Part 4 - 1982)

Copyright 1999© Megger

Diag No.	IEC Vector Group	Winding Connection: High-Voltage Winding	Winding Connection: Low-Voltage Winding	Phase Tested	External Jumpers	Winding Tested: High-Voltage Winding	Winding Tested: Low-Voltage Winding	Measured Turn Ratio
32	Zd6	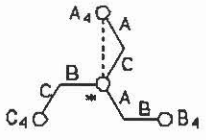	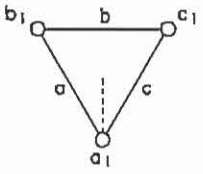	A B C	— — —	$A_4 - C_4$ $B_4 - A_4$ $C_4 - B_4$	$b_1 - a_1$ $c_1 - b_1$ $a_1 - c_1$	$\frac{HV}{LV}$
33	ZNy1	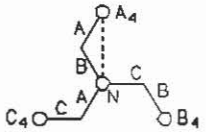	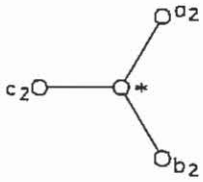	A B C	— — —	$A_4 - N$ $B_4 - N$ $C_4 - N$	$a_2 - b_2$ $b_2 - c_2$ $c_2 - a_2$	$\frac{HV}{LV \bullet \sqrt{3}}$
34	Zy1	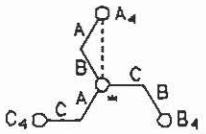	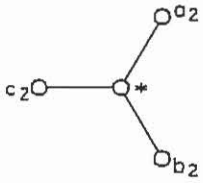	A B C	$B_4 - C_4$ $C_4 - A_4$ $A_4 - B_4$	$A_4 - (B_4 + C_4)$ $B_4 - (C_4 + A_4)$ $C_4 - (A_4 + B_4)$	$a_2 - b_2$ $b_2 - c_2$ $c_2 - a_2$	$\frac{HV}{LV} \bullet \frac{\sqrt{3}}{2}$
35	ZNy11	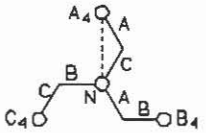	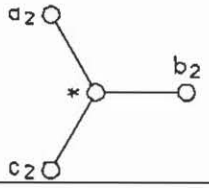	A B C	— — —	$A_4 - N$ $B_4 - N$ $C_4 - N$	$a_2 - c_2$ $b_2 - a_2$ $c_2 - b_2$	$\frac{HV}{LV \bullet \sqrt{3}}$
36	Zy11	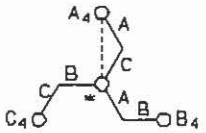	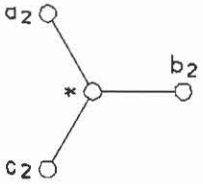	A B C	$B_4 - C_4$ $C_4 - A_4$ $A_4 - B_4$	$A_4 - (B_4 + C_4)$ $B_4 - (C_4 + A_4)$ $C_4 - (A_4 + B_4)$	$a_2 - c_2$ $b_2 - a_2$ $c_2 - b_2$	$\frac{HV}{LV} \bullet \frac{\sqrt{3}}{2}$

6

OPERATION

General Operating Procedure

Proceed only after reading and fully understanding Section 2, Safety, and setting up the test set as described. An operator who is familiar with the contents of this manual, the test setup, and the operation of the test set may follow the condensed operating instructions provided with the test set.

EMERGENCY SHUTDOWN
(Removal of Test Voltage from device being tested.)

Press any alphanumeric button or special function button on the keypad to terminate test or turn power off (RED KEY).

Note: "On" button and "backlight switch" button will NOT interrupt test or turn off power.

Description of Menus and Test Screens

Data shown on the menus and test screens in Figures 6-1 through 6-14 are for illustrative purposes only. The TTR test set menus and test screens are operated by using the keypad. On power up, the test set performs a self-test check, and all hardware and software variables are initialized.

Opening Display Screen

The LCD displays the opening screen (Figure 6-1) as the test set performs a diagnostic self-check of the electronics.

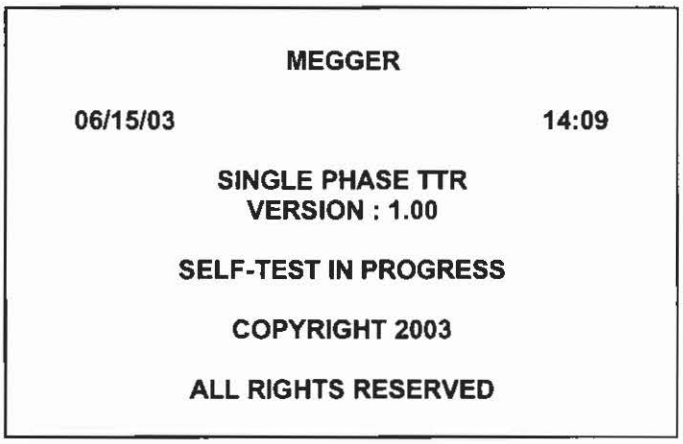

Figure 6-1. Opening Display Screen

If at power-up self-testing any errors are detected, one of the error messages listed in the ERROR MESSAGES section will be displayed on the screen.

If no errors are detected, the screen showing a battery charge level, in % of full charge, is displayed for 3 sec. Depending on battery charge level, the "DO NOT CHARGE BATTERY!" or "CHARGE BATTERY!" message follows the battery charge level message.

MAIN MENU Screen

After a successful self-test check, the main menu screen (Figure 6-2) appears.

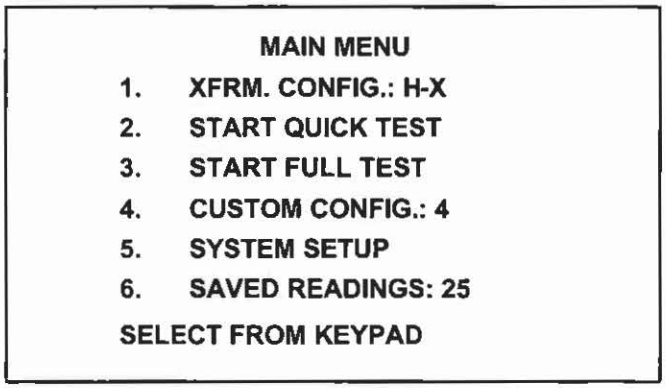

Figure 6-2. Main Menu Screen

1. XFRM. CONFIG. Allows operator to select single phase, three phase, or T-T transformer to be tested. The lead connections will be shown on test setup screen for selected single phase transformer. For 3 phase and T-T transformers, the lead connections are shown for each tested phase. Currently selected transformer configuration is displayed after colon mark.

2. START QUICK TEST Allows operator to perform testing with minimal steps and data entries.

3. START FULL TEST Allows full testing of transformer. Test report includes transformer nameplate data, calculated and measured turn ratio, ratio deviation (%), phase displacement, polarity, IEC vector group (1PH0 or 1PH6), and winding resistance.

4. CUSTOM CONFIGS.: Allows complete testing as per **START FULL TEST** using up to 100 stored configurations. Custom configurations are input by operator. The number of stored custom configurations is displayed after colon mark.

5. SYSTEM SETUP This menu permits choice of transformer standards, phase display units, resistance and polarity display, language and setting of date and time.

6. SAVED READINGS: Allows viewing, deleting, printing or uploading to PC up to 200 saved test results. The number of saved readings is displayed after colon mark.

TRANSFORMER CONFIGURATION Screen

If 1 (XFRM. CONFIG.) is selected on the main menu, the XFRM. CONFIGURATION screen (Figure 6-3) appears.

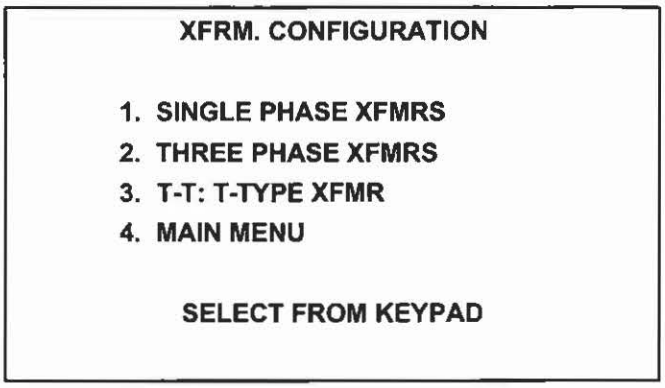

Figure 6-3. Transformer Configuration Screen

From this screen one can select the type of transformers to test or return to the Main Menu screen.

By selecting #1, various single-phase transformer configurations will be displayed on the screen. For example: H-X: No taps, a single-phase transformer with no taps on either windings; H-X2: a single phase transformer with two secondary windings (distribution transformer), and etc. One can return to the Previous Menu by selecting #5, or select additional single-phase transformer types by selecting 6. Refer to Figure 6-4 & Figure 6-4a.

A connection diagram for a single phase transformer will be displayed on the screen after a transformer type has been selected for test. From this screen the displayed diagram can be selected, by pressing the enter button, or using the scroll buttons other transformer diagrams are displayed that can be selected.

NOTE: The displayed diagrams provide wiring information only. They are not intended to provide physical location of bushing and or terminals of the transformer being tested.

By selecting #2, various three phase transformer configurations will be displayed on the screen. For example: Y-Y, Y-D, D-D and etc., Refer to Figure 6-5.

Selecting a three phase transformer type the screen will display various vector groups for the selected configuration, refer to Figure 6-5a for vector groups of a Y - Y transformer type.

Having selected the appropriate vector group, the MAIN MENU screen, Figure 6-2, with the selected transformer configuration / type is displayed.

By selecting #3, various "T" type transformer configurations will be displayed on the screen. For example: T-T0, T-T30 Lag or T-T30 Lead. Refer to Figure 6-6.

Having selected the appropriate T type transformer, the MAIN MENU screen, Figure 6-2, with the selected transformer configuration/type is displayed.

Selecting #4, the Main Menu screen, Figure 6-2 will be displayed.

NOTE: One can also return to the Main Menu screen by depressing the asterisk button on the keypad. Depressing the asterisk button from any screen, will revert to the Main Menu screen.

XFRM. CONFIGURATION

1. **H-X: NO TAPS**
2. **H-X_2: 2 SECONDARIES**
3. **H-X_T: TAP (S) ON X**
4. **H_T-X: TAP (S) ON H**
5. **PREVIOUS MENU**
6. **MORE**

SELECT FROM KEYPAD

Figure 6-4. Single Phase Transformer Configuration Screen

XFRM. CONFIGURATION

1. **H_T-X_T: TAPS ON H AND X**
2. **CT: CURRENT XFMR**
3. **REGULATOR**
4. **H-X_C:H2, X2 TIED**
5. **PREVIOUS MENU**

SELECT FROM KEYPAD

Figure 6-4a. Additional Single Phase Transformer Configuration Screen (when 6. MORE is selected on the screen shown in Figure 6-4)

H-Xc transformer configuration contains H_2 and X_2 winding terminals tied together inside a transformer can. There is one common H2, X2 terminal on a transformer can.

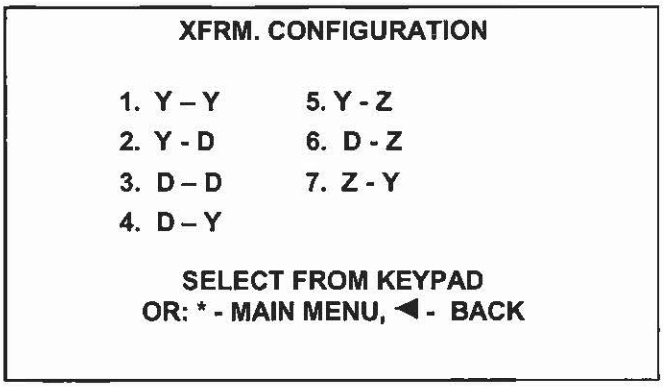

Figure 6-5. Three Phase Transformer Configuration Screen

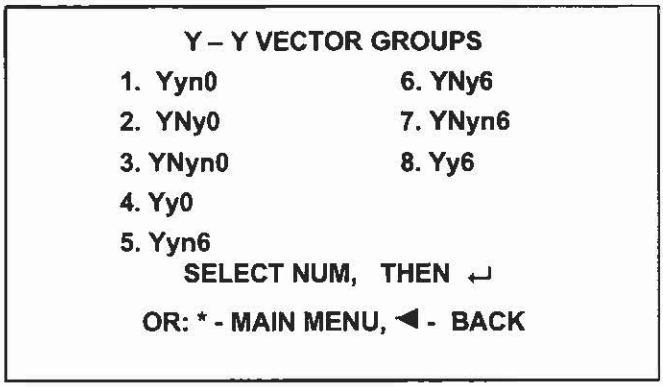

Figure 6-5a. Three Phase Transformer Configuration Screen

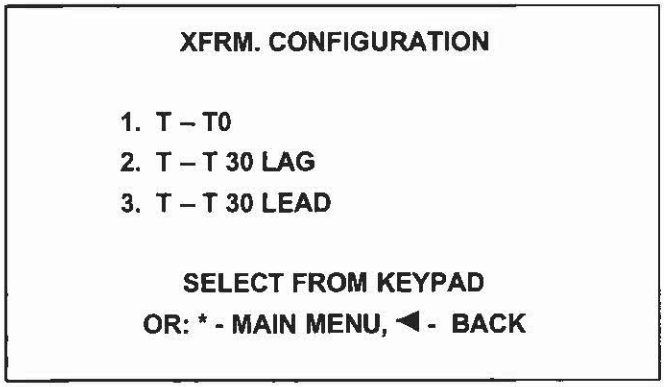

Figure 6-6. T - Type Transformer Configuration Screen

Having selected the transformer type to test, return to the Main Menu screen and select type of test to perform; Quick or Full test.

Quick Test Single Phase Transformer

Upon selecting Quick test for a single-phase type transformer, and with the TTR100 connected as indicated by the connection diagram that was previously displayed when the transformer type was selected, a XFMR Rating screen, shown in Figure 6-7, appears (if polarity test was selected for ANSI standard). Select the number which is appropriate for the transformer being tested. After the selection, a TEST IN PROGRESS screen appears.

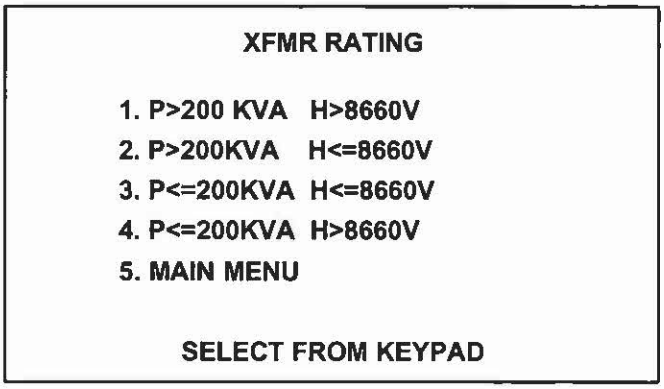

Figure 6-7. Transformer Rating Screen

A test number will be displayed in the upper left hand corner of the screen that can be used as a reference for the test being conducted. Also, a Stop message is displayed on the lower portion of the screen. "PRESS ANY KEY TO STOP TEST."

At the completion of the test, TEST RESULT 1 screen is displayed containing the measured turn ratio, ratios for multiple windings, and polarity (additive or subtractive) of the transformer, if function is activated on the SYSTEM SETUP menu. Letter "A" or "S" in the parentheses indicates the expected polarity of the transformer.

TEST RESULT 2 screen is displayed by pressing the right scroll key, containing the following information: Test Number, Vector Group, Phase displacement between high side and low side windings, Excitation current (no-load), DC winding resistance of the high side and the low side(s), if function is activated on the SYSTEM SETUP menu. When "N/A" is displayed for resistance, it means the resistance value is above the specified range.

Pressing 1 in the TEST RESULT 2 screen, one can provide HEADER information such as, Company name, Substation name or location, Manufacturer name, Transformer rating, Temperature, %RH and Operator's name. This information will be available for the test report when printed. In addition, one can print the HEADER from this screen or return to TEST RESULT 2 screen.

From the TEST RESULT 2 screen, one can also select the following by pressing the appropriate number: Print the test result (on an optional printer) by selecting 2, Store the test result (for future viewing and / or printing and / or uploading to a PC) by selecting 3, Re-test by selecting 4, return to TEST RESULT 1 screen by selecting the left scroll key, or return to the MAIN MENU by pressing the asterisk key. Returning to the MAIN MENU screen will erase any test results that have been accumulated but have not been saved.

TEST RESULT 2 screen will not be available for transformers such as, CTs, regulators and tapped winding(s). However, all the above-mentioned information (except polarity) will be found on the TEST RESULT 1 screen.

Quick Test Three Phase Transformer

A screen, containing connection information in text form, will be displayed for each phase when testing a three phase transformer in the Quick test mode. Connect the TTR100 test leads to the transformer to be tested as per the information displayed and press 1 to start test or press 2 to return to the previous screen.

At the completion of the test, TEST RESULT 1 screen is displayed containing the measured turns ratio for the phase being tested, in addition to a test number.

TEST RESULT 2 screen will be displayed by pressing the right scroll key. Vector group, Excitation current (no-load), and Phase displacement results are displayed. From this screen one can return to the TEST RESULT 1 screen, go to the TEST RESULT 3 screen, or return to the MAIN MENU screen by selecting the appropriate displayed key. Returning to the MAIN MENU screen will erase any test results that have been accumulated during the test.

TEST RESULT 3 screen displays DC winding resistance of the high side and the low side windings, provided that the function is activated. From this screen one can re-test the phase, continue testing the other phases, return back to the previous TEST RESULT screen, or return to the MAIN MENU screen by selecting the appropriate displayed key.

Selecting CONTINUE, phase B connection information will be displayed. The testing of phase B will begin by selecting 1 and the results are displayed in TEST RESULTS 1, 2 & 3, as mentioned above. Phase C will be tested by selecting CONTINUE and then the number 1. The results are also displayed as they were displayed for phase A and B.

Selecting CONTINUE at the conclusion of the Phase C test, one can provide HEADER information, PRINT header and the test results, STORE the test results, continue with the *NEXT TEST* if testing a tapped transformer, or return to either the previous TEST RESULT screen or to the MAIN MENU.

Quick Test T-Type Transformers

A screen, containing connection information in text form, will be displayed for each phase when testing a T- type transformer in the Quick test mode. Connect the TTR100 test leads to the transformer to be tested as per the information displayed and press 1 to start test or press 2 to return to the previous screen.

At the completion of the test, TEST RESULT 1 screen is displayed containing the measured turn ratio for the phase being tested, in addition to a test number.

TEST RESULT 2 screen will be displayed by pressing the right scroll key. Vector group, Excitation current (no-load), and Phase displacement results are displayed. From this screen one can return to the TEST RESULT 1 screen, go to the TEST RESULT 3 screen, or return to the MAIN MENU screen by selecting the appropriate displayed key. Returning to the MAIN MENU screen will erase any test results that have been accumulated.

TEST RESULT 3 screen displays DC winding resistance of the high side and the low side windings, provided that the function is activated. From this screen one can re-test the phase, continue testing the other phase, return back to the previous TEST RESULT screen, or return to the MAIN MENU screen by selecting the appropriate displayed key.

Selecting CONTINUE, Phase B connection information will be displayed. The testing of phase B will begin by selecting 1 and the results are displayed in TEST RESULTS 1, 2 & 3, as mentioned above.

Selecting CONTINUE at the conclusion of the Phase B test, one can provide HEADER information, PRINT header and the test results, STORE the test results, or return to either the previous TEST RESULT screen or to the MAIN MENU.

Full Test Single Phase Transformer

Upon selecting Full test for a single-phase type transformer, and with the TTR100 connected as indicated by the connection diagram that was previously displayed when the transformer type was selected, a test setup screen appears. The last tested transformer information (previously entered) is displayed on the screen.

Refer to Figure 6-8.

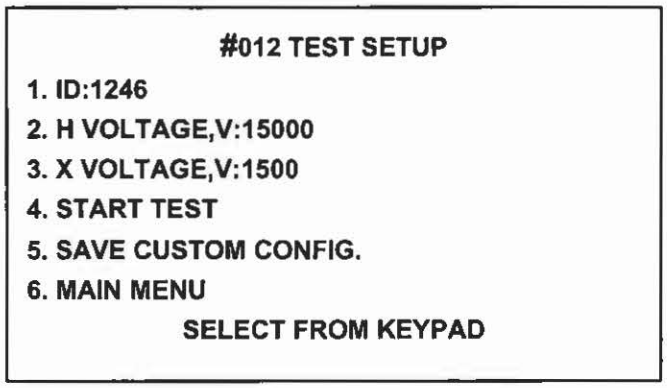

Figure 6-8. TEST SETUP Screen

Prior to testing, enter the ID number of the transformer to be tested by selecting 1. Once the ID information is entered, depress the ENTER key to accept the information. Next enter the H & X voltages (line-to-line) and accept the values with the enter key. The voltage values will be used in calculating the turns ratio and then compared with the measured value to determine the % deviation. At this point, one can start the test by selecting 4, or save the entered information as custom configuration for future use by selecting 5.

NOTE: In the event that the configuration of the transformer to be tested had been previously saved, one would first select 4 CUSTOM CONFIGS., from the MAIN MENU, followed by 1, from the CUSTOM CONFIGS. menu and finally the appropriate configuration is selected from the stored configurations within the TTR100.

Selecting 4, from the TEST SETUP menu, will start the test and a screen, shown in Figure 6-6 appears. After selecting a transformer rating, a TEST IN PROGRESS screen appears.

A test number will be displayed in the upper left hand corner of the screen that can be used as a reference for the test being conducted. The H & X voltages are displayed and a Stop message is displayed on the lower portion of the screen. "PRESS ANY KEYS TO STOP TEST."

At the completion of the test, TEST RESULT 1 screen is displayed containing the test number, the ID number, the calculated turns ratio, measured turns ratio, ratios for multiple windings, the % Deviation, and polarity (additive or subtractive) of the transformer, if function is activated. Letter "A" or "S" in the parentheses indicates the expected polarity of the transformer.

TEST RESULT 2 screen is displayed by pressing the right scroll key. It contains the following information: Test Number, Vector Group, Phase displacement between high side and low side windings, Excitation current (no-load), DC winding resistance of the high side and the low side(s), if function is activated.

Pressing 1 in the TEST RESULT 2 screen, one can provide HEADER information such as, Company name, Substation name or location, Manufacturer name, Transformer rating, Temperature, %RH and Operator's name. This information will be available for the test report when printed. In addition, one can print the HEADER from this screen or return to TEST RESULT 2 screen.

From the TEST RESULT 2 screen, one can also select the following by pressing the appropriate number: Print the test result by selecting 2, Store the test result by selecting 3, Re-test by selecting 4, return to TEST RESULT 1 screen by selecting the left scroll key, or return to the MAIN MENU by pressing the asterisk key. Returning to the MAIN MENU screen will erase any test results that have been accumulated but not saved.

Full Test Single Phase Tapped Transformer

When testing tapped transformers the procedure will be the same as described above. However, additional information will be requested in the various Test Setup screens such as: number of taps, nominal tap number, highest tap number, etc. TTR100 accepts letter, numeric and R-N-L (for the tap changers) designation of the taps on both H and X side of transformer Should an error be made in entering the information, select the associated information number and re-enter the information. The voltages at the taps to be tested are displayed on the screen.

At the conclusion of the test, store the test result prior to testing the next tap. Otherwise the test results will be lost. A different test number will identify each tap test result however the transformer ID will remain the same based on the information provided in the header information.

To test other taps, select 5 "Next Test" on TEST RESULT 2 screen. Additional TEST SETUP screens will be displayed. Select 2, and enter the number of the tap to be tested, followed by 3. Start Test. Continue this process until all of the taps have been tested.

Full Test CTs

When testing CTs follow the same procedure as indicated for single-phase transformers. Selecting Full Test, a set up screen will be displayed requesting information such as device ID, Primary amps and etc. Once the information has been provided, one can store the configuration for future use. If one selects not to store the configuration, select Start Test.

A test in progress screen will be displayed, followed by a TEST RESULT 1 screen. This screen contains Test Number, ID number, Primary & Secondary amps, calculated and measured ratios and % deviation.

TEST RESULT 2 screen is displayed when the right scroll key is selected and the following results are shown: Test voltage (8 or 1.5 Vrms), Polarity (NORMAL when primary and secondary CT terminals have the same polarity, or REVERSED when primary and secondary CT terminals have the opposite polarity), DC winding resistance of low side, phase displacement and Excitation current. From this screen the Header information can be entered, test results can be Printed or Stored, the CT can be RE-TESTED or one can return to the PREVIOUS or Main Menu.

Full Test Regulator

When testing regulators follow the same procedure as indicated for single-phase transformers. Selecting Full Test, a TEST SETUP screen will be displayed requesting device ID and H VOLTAGE value information. Select CONTINUE once the requested information has been entered. A second TEST SETUP screen will be displayed requesting X VOLTAGE value and number / quantity of TAPS associated with the device being tested. Select CONTINUE once the requested information has been entered. An additional TEST SETUP screen will be displayed with the provided information. At this point one can modify the entered information, Save to Custom Configs, Return to the Main Menu or START TEST.

Selecting Start Test, a test in progress screen is displayed showing the test and ID numbers, as well as the H & X voltage values that were entered. TEST RESULT 1 screen will be displayed at the end of test, showing the CALCULATED & Measured ratios, % DEVIATION, POLARITY and the previously mentioned information.

TEST RESULT 2 screen contains the VECTOR GROUP, Phase displacement between windings, EXCITATION current, at no load, and DC winding resistances, if function is activated. Also, from this screen the HEADER information can be entered and then printed, test results PRINTED or STORED, device RE-TESTED, or return to the TEST RESULT 1 screen or MAIN MENU.

Test Result Symbols

N1	Turns ratio of single phase transformer or turns ratio of X1–X2 secondary winding section of a two-secondary winding distribution transformer.
N2	Turns ratio of X3-X2 secondary winding section of a two-secondary winding distribution transformer.
NA, NB, NC	Turns ratio of three phase transformer for phase A, B and C, respectively.
P12	Phase angle (displacement) between the primary and secondary single phase transformer windings or between the primary and X1-X2 secondary winding section of a two-secondary winding distribution transformer.
P32	Phase angle (displacement) between the primary and X3-X2 secondary windings of a two-secondary winding distribution transformer.
PA, PB, PC	Phase angle (displacement) between the primary and secondary windings of three phase transformer for phase A, B and C, respectively.
I	Excitation current of single phase transformer.
IA, IB, IC	Excitation current of three phase transformer for phase A, B and C, respectively.
RH	Primary winding resistance of single phase transformer.
R12	Secondary winding resistance of single phase transformer or X1-X2 winding section of a two-secondary winding distribution transformer.
R32	Secondary winding resistance of X3-X2 winding section of a two-secondary winding distribution transformer.
RHA, RHB, RHC	Primary winding resistance of three phase transformer for phase A, B and C, respectively.
RXA, RXB, RXC	Secondary winding resistance of three phase transformer for phase A, B and C, respectively.
', °, ^	Phase angle (displacement) in minutes, degrees, or centiradians, respectively

Custom Configurations

Up to 100 custom transformer configurations, test plans, can be stored in the TTR100. The CUSTOM CONFIGS. screen is accessed by selecting 4, CUSTOM CONFIGS., on the Main Menu. The number of stored configurations is indicated on the Main Menu. Refer to Figure 6-9 for the CUSTOM CONFIGS. screen.

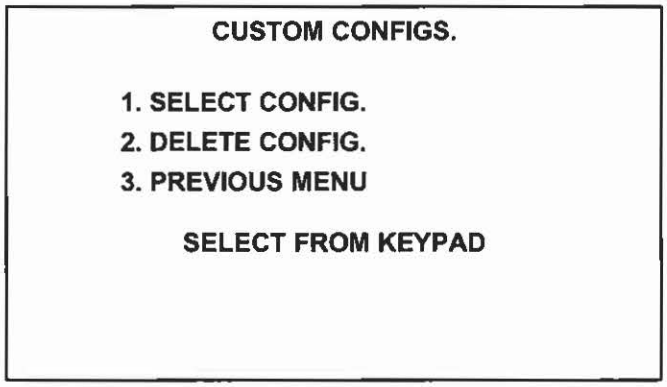

Figure 6-9. Custom Configs. Screen

To select a specific configuration, select 1, SELECT CONFIG. Numerous screens with the stored configurations may be available. The configurations are stored in ascending order of IDs. Scroll through the screens by using the left & right scroll keys until the desired configuration appears. To select the configuration, choose the associated number and press the ENTER key. All saved transformer information will be displayed on FULL TEST screen(s).

To delete a specific configuration, select 2, DELETE CONFIG. Numerous screens listing stored configurations may be available. Scroll through the screens by using the left & right scroll keys until the desired configuration appears. To delete a configuration, choose the associated number and press the ENTER key. The TTR100 will ask if the selected configuration is to be deleted? Enter 0 for NO, and 1 for YES.

NOTES:

1. *CUSTOM CONFIGURATIONS can be saved when conducting a FULL TEST on devices.*

2. *If transformer ID number and transformer configuration exceeds 18 characters, the transformer configuration is NOT displayed on the CUSTOM CONFIGURATION screen. Only the transformer ID will be displayed.*

System Setup

When selection 4, SYSTEM SETUP, on the MAIN MENU is chosen, the SYSTEM SETUP MENU screen appears as shown in Figure 6-10.

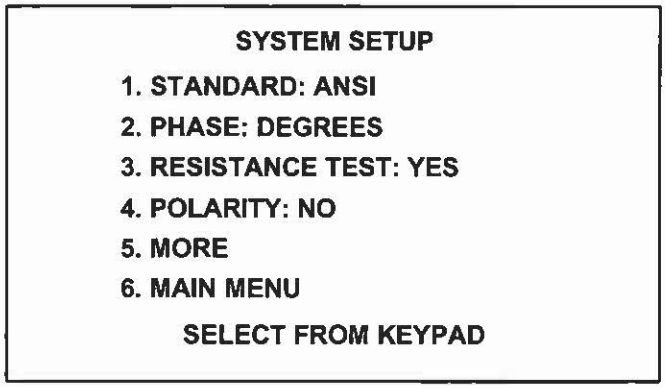

Figure 6-10. SYSTEM SETUP Screen 1

1. STANDARD: This selection is for entering the desired transformer standard. Three transformer standards are available to select from: ANSI, IEC, or AS (Australia Standard). Selecting 1 and using the scroll keys until the appropriate standard appears on the screen choose the desired standard by depressing the ENTER key.

2. PHASE: This selection allows a choice of the phase display units: DEGREES, CENTIRADS or NONE. If DEGREES is selected, any phase test results below 1 degree will be displayed in minutes. If CENTIRADS is selected, the phase test results will be displayed in centiradians (1 centiradian = 0.573 degrees). If NONE is selected, the phase test results will not be displayed.). Selecting 2 and using the scroll keys until the appropriate unit or none appears on the screen choose the entry by depressing the ENTER key.

3. RESISTANCE TEST: DC winding resistance function can either be active (YES) or inactive (NO). Selecting 3 and using the scroll keys until the appropriate functional state is displayed on the screen choose the desired state by depressing the ENTER key.

4. POLARITY: Polarity test function can either be active (YES) or inactive (NO). Selecting 4 and using the scroll keys until the appropriate functional state is displayed on the screen choose the desired state by depressing the ENTER key.

5. MORE: Selecting 4, an additional SYSTEM SETUP screen is displayed, Refer to Figure 6-11.

6. MAIN MENU: Selecting 6 or asterisk will return one to the MAIN MENU screen.

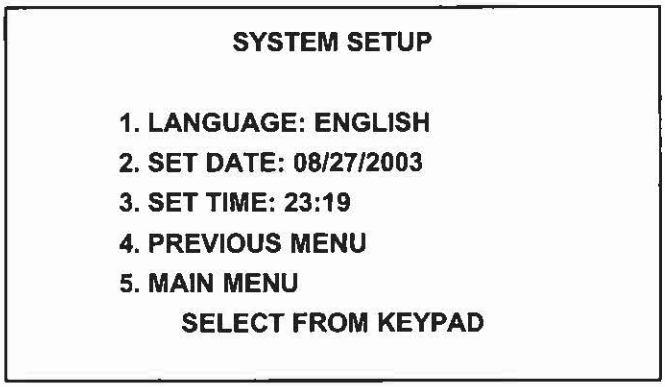

Figure 6-11. SYSTEM SETUP Screen 2

1. LANGUAGE: This selection allows a choice of six languages; English, French, Spanish, Portuguese, German and Italian. To choose a language, merely select the number associated with the desired language. Text on all screens except for the opening display screen will appear in the language chosen.
2. SET DATE: This selection is for entering the date. Year has four-digit representation (mm/dd/yyyy). To set the date, select 2 and a curser will be flashing on the leading digit of the month if mm/dd/yyyy format used, or curser will be flashing on the leading digit of the day if dd/mm/yyyy format is used. The month or day is adjusted by using the scroll keys. Once the correct month or day is displayed, depress the ENTER key to make selection. The curser will move to the day or month segment. Make your adjustment by using the scroll keys and select by Depressing the ENTER key. The year is adjusted in the same manner. To change date format from mm/dd/yyyy to dd/mm/yyyy, select 2 and then depress the asterisk key.
3. SET TIME: This selection is for entering the time. Time is displayed on a 00:00 to 24:00 format. To set the time, select 3 and a curser will be flashing on the leading hour digit. Adjust by using the scroll keys. Once the correct hour is displayed, depress the ENTER key to select. The curser will move to the minute segment. Adjust as necessary with the use of the scroll keys, and select by depressing the ENTER key.
4. PREVIOUS MENU: SELECTING 4 will return one to the SYSTEM SETUP screen 1.
5. Selecting 5 will return one to the MAIN MENU screen.

SAVED READINGS Screen

When 6, SAVED READINGS is selected on the MAIN MENU screen the SAVED READINGS screen appears as shown in Figure 6-12. The total number of saved readings is displayed on the MAIN MENU screen, following the SAVED READINGS selection, and it is also displayed in the SAVED READINGS menu screen.

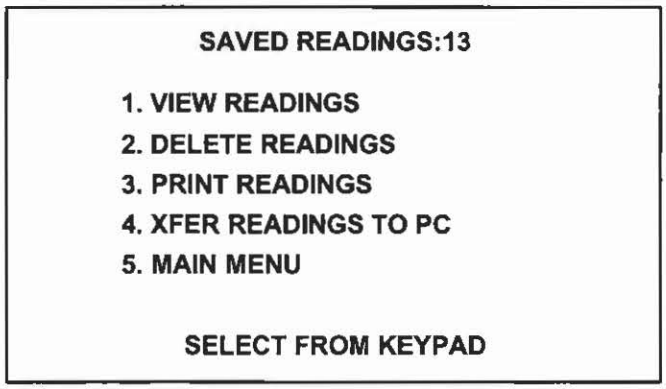

Figure 6-12. SAVED READINGS Screen

1. VIEW READINGS: This selection allows one to view saved HEADER information and associated test results. A prompt line will request the test number to view. Enter the number and then depress the ENTER key. The first screen shown is the HEADER screen containing information such as: Company name, Substation name, equipment Manufacturer and etc. This information should have been entered at the time of test. If it had not been entered, the information can be entered or corrected at this time. In addition, the test number and test date is also displayed on this screen.

   The scroll keys will allow one to view the test result screens. The number of available test result screens will vary depending on the type of device tested, as well as the type of test conducted. The HEADER information and associated test results can be printed from the final test result screen of the selected test number.

   To view the subsequent HEADER screen and associated test results, select 8. To view the previous HEADER screen and associated test results from a HEADER screen, use the left scroll key. To exit the VIEW READINGS mode and return to the SAVED READINGS screen, select 9.

2. DELETE READINGS: This selection allows one to DELETE saved header information and associated test results. Prompt lines will be displayed at the

bottom of the screen. If all saved readings are to be deleted, enter 0; if a specific test result is to be deleted enter the associated test number and depress the ENTER key; if a range of test results are to be deleted enter the starting range number followed by a dash followed by the last test number to be deleted. In all cases, one will be asked to validate the request.

3. PRINT READINGS: This selection allows one to PRINT saved HEADER information and associated test results. Prompt lines will be displayed at the bottom of the screen. If all saved readings are to be PRINTED, enter 0; if a specific test result is to be PRINTED enter the associated test number and depress the ENTER key; if a range of test results are to be PRITED enter the starting range number followed by a ***dash*** followed by the last test number to be PRINTED. In all cases, a message will be flashed at the bottom of the screen indicating that PRINTING is completed.
4. XFER READINGS TO PC: This selection allows one to TRANSFER TO a PC saved HEADER information and associated test results. Prompt lines will be displayed at the bottom of the screen. If all saved readings are to be TRANSFER, enter 0. A message may be displayed indicating that the readings are being transferred; if a specific test result is to be TRANSFER enter the associated test number and depress the ENTER key; if a range of test results are to be TRANSFER enter the starting range number followed by a ***dash*** followed by the last test number to be TRANSFER. A message may be displayed indicating that the readings are being transferred. In all cases, a message will be flashed at the bottom of the screen indicating that TRANSFER is completed.
5. MAIN MENU: This selection will return one to the MAIN MENU.

Error Messages

All TTR100 error messages are divided by 4 categories: self-test error messages, test error messages, test result error messages, and miscellaneous error messages.

The self-test error messages may appear on the opening screen during power-up self-test procedure. The Table 6-1 below shows the messages.

Table 6-1. Self-test Error Messages

Error Message	Description of error and action required
CHECKING PLD:BAD	CPLD chip is not working properly. Contact the factory for repair.
CHECKING DISPLAY:BAD	LCD display is not working properly. Contact the factory for repair.
CHECKING RAM:BAD	Microprocessor RAM is not working. Contact the factory for repair.
REPAIR REQUIRED! CONTACT FACTORY	There was a self-test error. Contact the factory for repair.
UNIT INOPERATIVE	One of the input voltages is too low, or A/D converter is not working for the reference oscillator. Contact the factory for repair.
CHARGE BATTERY!	The battery voltage is less than 3.3 volts. Charge the battery.
LOW BATTERY	The battery voltage is between 3.3 volts and 3.42 volts. Charge the battery.
BAD TEMP SENSOR	Temperature sensor is not working. Contact the factory for repair.
BAD REALTIME CLOCK	Can't read the real time clock. Contact the factory for repair.
BAD SERIAL EEPROM	Serial EEPROM can't be written to or read from. Contact the factory for repair.
ONEWIRE FAILED	There was an error trying to connect to both the temperature sensor and the real time clock. Contact the factory for repair.

The test error messages may appear on the screens during testing of transformer. The Table 6-2 below shows the messages.

Table 6-2. Test Error Messages

Error Message	Description of error and action required
CHARGE BATTERY!	The battery voltage is less than 3.3 volts. Charge the battery.
LOW BATTERY (Battery image in upper right corner of screen)	The battery voltage is between 3.3 volts and 3.42 volts. Charge the battery.
EXC.CURRENT TOO HIGH	Excitation current is too high. Check for any wrong connections.
CHECK CONNECTIONS	The lead(s) are not properly connected to transformer. Connect the leads properly. Test lead(s) is open. Contact the factory for repair.
CONNECTIONS REVERSED	H and X connections are reversed. Connect H and X test leads properly.
TURN RATIO TOO HIGH	The turn ratio is too high during a quick test. Causes test to stop. Check connections.
TURN RATIO > 20000	The turn ratio is too high during a full test. Causes test to stop. Check connections.
TURN RATIO TOO LOW	The turn ratio is too low during a quick test. Causes test to stop. Check connections.
TURN RATIO < 0.8	The turn ratio is too low during a full test. Causes test to stop. Check connections.
BAD SERIAL EEPROM	Serial EEPROM can't be written to or read from. Contact the factory for repair.
ONEWIRE FAILED	Temperature sensor and the real time clock interface failed. Contact the factory for repair.
ADC FAILED	A/D converter failed. Contact the factory for repair.
ADC TIMEOUT	A/D converters didn't respond. Contact the factory for repair.

The test result error messages may appear on the test result screens after test is complete. The Table 6-3 below shows the messages.

Table 6-3. Test Result Error Messages

Error Message	Description of error and action required
RATIO<	Turns ratio is less than 0.8. Check for any wrong connections.
RATIO>	Turns ratio is greater than 20000. Check for any wrong connections.

The miscellaneous error messages may appear on the screens during saving, printing, or uploading functions. The Table 6-4 below shows the messages.

Table 6-4. Miscellaneous Messages

Error Message	Description of error and action required
MEMORY IS FULL.DELETE A CONFIG.? 0=NO 1=YES	The maximum number of custom configurations have been saved. In order to save this one, one has to be deleted.
MEMORY IS FULL.DELETE TEST RESULT? 0=N 1=Y	The maximum number of tests have been saved. In order to save this one, one has to be deleted.
PRINT ERROR	There was an error during printing a report. Try again. If failed, contact the factory for repair.
TRANSFER ERROR	There was an error while transferring test results to a PC. Try again. If failed, contact the factory for repair.

When an error message appears on a screen indicating an abnormal operating condition, verify the condition by taking a repeat measurement before attempting to take any corrective action. Also, refer to the Troubleshooting section for malfunctions and possible causes.

Open connections, wrong connections, open windings, shorted windings, high resistance windings, other abnormal transformer problems, or a combination of these may cause a large deviation from normal turn ratio or indicate an unusual message. The unusual operating conditions may be caused by an abnormal leakage reactance or capacitive coupling within the transformer windings.

Use with the Optional Printer

If you are using the optional printer, plug the printer cable into the RS232/PRINTER receptacle on the TTR100 test set and turn it on. A separate manual is supplied with the printer. Refer to it for specific information about how to connect, operate, and care for the printer.

Header information and test results may be printed from QUICK & FULL TEST results screens and from SAVED READINGS screen.

Megger
1-ph TRANSFORMER TURN RATIO TESTER
CATALOG NO. TTR100

TRANSFORMER TEST REPORT
COMPANY: T-TCOMPANY
SUBSTATION: KENT
MANUFACTURER 25
TRANSFORMER RATING: 750KVA
AMBIENT TEMPERATURE: 21 C
RELATIVE HUMIDITY: 58%
TTR S/N: E105
OPERATOR (S): GREG
COMMENTS/NOTES:

Figure 6-13a. Sample Test Report Header

DATE (M/D/Y) : 06/01/1999 12:25
TEST: 002
TRANSFORMER ID: 12A-76M/2
TYPE: SINGLE PHASE TRANSFORMER 1ph0
TAPS TESTED: 3 – 17
H VOLTAGE: 10000
X VOLTAGE: 10000
CALCULATED TURNS RATIO: 1.0000
TEST VOLTAGE: 8V

RATIO	1.0013
% DEVIATION	0.13
PHASE(min)	-14.7
lexc(ma)	0.03

Figure 6-13b. Sample Single Phase Test Report

Using COMLink Program

COMLink program provides the operator interface for:

- transferring readings from TTR to a PC
- viewing test data
- printing out test reports
- creating transformer test results database

Test data stored in the internal memory of the TTR100 test set may be transferred to a PC. COMLink program supplied with the TTR provides the operator interface for transferring stored data from the TTR to the PC. With this software the user can print out test reports from the PC and save the test data as a (.txt) file or into the database incorporated into the COMLink Upload software. With these two file formats the user can either open the data into an Excel spreadsheet or open the database using MS Access.

System Requirements

Windows NT3.1 or, Windows 95 or later as your operating system.[1]

An 80386 Processor or higher

A VGA monitor or one with higher screen resolution

Set the Display Properties for the Desktop area 800 by 600 pixels and small fonts.

16 M of RAM

Comm port 38.4 kBaud or better

CD Drive

Installation

The COMLink files are contained on the a CD which is shipped with the TTR. To install the program, insert the COMLink CD into the CD drive

- On Windows 95, Windows NT 4.0 or Windows XP: Select Run from the Taskbar Start menu, type the full name of the file (for example, D:\Setup.exe), press the Enter key and follow the prompts.
- On Windows NT 3.1: activate the Program Manager, select Run from the File menu, type the full name of the file (for example, D:\Setup.exe), press the Enter key and follow the prompts.
- COMLINK is a 32-bit program and Win 3.1 won't handle it.

[1] Windows NT, Windows XP, Windows 95, and MS ACCESS are registered trademark of Microsoft Inc.

Upgrade Instructions

Follow the installation instructions above. You can install the upgraded version of COMLink to the same location as a previously installed copy of COMLink or AVOLink.

Documentation

For full documentation, press the F1 key or click on the help button on the main screen. For context sensitive help, click on the help button on the screen you are working on.

Usage

Once the software is installed, all that is needed is to press "Start" on the menu bar then select "Program\COMLink\COMLink " to start the COMLink TTR Upload software, or double click on the desk top icon.

Transferring readings from TTR to PC (Get from TTR window)

To transfer data to a PC, log to the disk drive and/or directory that contains the COMLink program and select it. Connect the TTR's RS232 port to the PC through a cable (Megger p/n 33147-18) supplied.

If the USB port is used, plug a USB serial adapter, USA-19QW or equivalent, into the USB port of the PC. Connect the TTR's RS232 port to the adapter. Install the software drivers for USB serial adapter (supplied with the adapter).

The COMLink program starts with the opening window. In the Select Device window, select Single Phase TTR. The Transfer Readings to PC screen appears. Select Maintenance tab, then, select the Setup Serial Port tab. The COMLink Setup serial port window will appear. This window allows you set up the serial port for communication to the remote device.

The baud rate, parity, stop bits and data bits must match exactly those in the remote device. The following parameters should be selected:

- Select the com. port to be used
- Baud Rate: 38.4 kBaud
- Parity: N(none)
- Stop bits: 1
- Data bits: 8

NOTE: The serial port settings are already appropriately set for the selected device. However, the COM port will need to be selected.

Select Save Settings to set the serial port parameters to those you selected and to initialize the serial port. Select OK button.

Select Restore Settings to leave the serial port parameters unchanged.

Press Transfer Readings to PC button. The opening window will appear.

All test data transferred from the TTR is stored in an ASCII text file. The data items in each test are separated by commas. Each test is separated by a carriage return and line feed.

On the PC:

- specify the path where the test data file will be stored, or accept the default path.
- specify the file name which will contain the test data, or accept the default path.
- select the Transfer Readings to PC test data button. This causes the program to go into a wait state where it waits for the TTR to send the test data. At this time the Stop Reading Transfer button is enabled so you can cancel waiting for the TTR.

On the TTR:

- select 6 (SAVED READINGS) from the Main Menu screen
- select 4 (TRANSFER READINGS TO PC) on SAVED READINGS screen
- enter 0 to transfer all readings, a message will be displayed indicating that data is being transferred,

or

- enter start test number, followed by a dash, followed by the last test number to be transferred to transfer a group of test results to a PC, then press ↵

or

- enter a test number to transfer a specific test result to a PC, then press ↵.

After receiving all data, communication status window will change message from "Waiting for data" to "Received all data successfully." If uploading close to 200 tests, the upload may take 1-2 minutes. Any screen saver that is set for a shorter time than the data transfer time may interrupt the data transfer. In this case either lengthen the screen saver idle time or temporarily disable the screen saver.

The uploaded data is automatically saved to a default "C" drive COMLink directory, or to a previously selected directory as a ".txt" file using the name which appears in the "Test data file name" box.

Viewing test data on PC (View test data window)

You can view the test data, in a specified file, by pressing the "View Readings from File" button. A window "Readings Uploaded from TTR" opens. At this time all the user entry data can be entered into the fields which are in the upper portion of the window.

Excel or Note Pad can also be used to view this ".txt" data. Excel is assumed to be in its default installation directory C:\Program Files\Microsoft Office\Office. Notepad is assumed to be in the windows directory C:\Windows.When you have selected a program, click on the Start Program button to start the program.

Saving the selected data to a file can be accomplished by pressing the "Save to File" button. This data is saved to a selected path/directory as a ".txt" file, using the name assigned in the "Test Data File Name" box.

User Entry Fields

Prior to printing the test report, the user needs to fill in the transformer information to properly document the test. If the information has been entered during testing, it is displayed in the fields. However, at this time it may be corrected.

- COMPANY, once the database has been saved the company name will reappear when future readings are uploaded. You can change this at any time. As the user enters additional entries, the pull-down menu o the right will include it an all past entries.
- SUBSTATION and MANUFACTURER, as the user enters more entries the pull down on the right of these two fields will include all past entries. This assists in consistent data entries.
- TRANSFORMER RATINGS, AMBIENT TEMPERATURE, RELATIVE HUMIDITY, OPERATOR AND COMMENTS / NOTES are entries made every time a printout is to be made.
- MAX % RATIO DEVIATION PERMITTED is a field used to determine whether the ratio deviation is within limits and the results will appear in the PASS/FAIL column of the report.
- The blank field on the top of the window may be used to enter, for example, the name of a test company, etc.

Megger.

Printing a Transformer Test Report

To select the transformer test report to be printed:

1. Click the left mouse button and drag the mouse to highlight a group of tests

   OR

2. Press and hold "Control" then clicking the left mouse button to highlight multiple tests
3. Then, press print button.

EUROTRANSFORMR- Transformer Test Report

EURO-TRANSTEST, GB

Date of Test: 09/29/2003 14:38:00		Test Voltage: 8.0
Substation: 123/A		Ambient Temperature: 19 C
Transformer S/N:		Relative Humidity: 64
Manufacturer: ACBN		TTR S/N: E105
Transformer Rating: 35 KVA		Date of Report: 09/29/2003
Max. % Ratio Deviation Permitted: 0.50		Operator (S): Kevin Bright
Primary Nameplate, V(L-L): 12200	Secondary Nameplate, V(L-L): 1220	Tertiary Nameplate, V(L-L):

Phasors: Yyn0

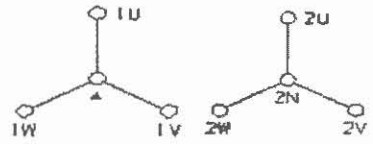

Phase	Connections H-X	H-Y	CT	Winding Shorted
A	1U-1V, 2U-2V	-	-	-
B	1V-1W, 2V-2W	-	-	-
C	1W-1U, 2W-2U	-	-	-

Comments / Notes

Transformer designation: S/N-u8

Phase	CT Prim Amps	CT Sec Amps	Nameplate voltage H Volts	Nameplate voltage X Volts	Nameplate voltage Y Volts	Taps H	Taps X	Taps Y	Ratio Calc Ratio	Ratio Meas Ratio	Ratio % Dev	Phase -	Iexc mA	Resistance Prim Ohms	Resistance Sec Ohms	Pass or Fail
A	-	-	-	-	-			-	-	10.004	-	0.17c	0.785	12.394	1.8492	-
B	-	-	-	-	-			-	-	10.005	-	0.13c	0.790	12.447	1.8892	-
C	-	-	-	-	-			-	-	10.006	-	0.14c	0.821	12.563	1.8495	-

Megger
Automatic Transformer Turn-Ratio Tester

Figure 6-14. Report Printout

Saving Test Results to Database

To save transformer test result to database:

1. Click the left mouse button and drag the mouse to highlight a group of tests to be saved.
2. Press and hold "Control" then click the left mouse button to highlight multiple tests.
3. Press "Save Selection to PC Database" button.

The database can be opened with MS ACCESS using the path C:\program files\ Megger\COMLink\ttrdatabase.

Viewing Test Results from the Database

To view the reading from the PC database: From the COMLink Main Menu:

1. Select the Login tab.
2. Press "View Readings form PCDB".
3. Select transformer's test results.

Megger.

7

SERVICE

Maintenance

Maintenance should be performed only by qualified persons familiar with the hazards involved with high-voltage test equipment. Read and understand Section 2, Safety, before performing any service.

The TTR100 test set is sturdily constructed and requires no periodic maintenance. Routine maintenance is all that is required for the TTR test sets. Inspect the cable assemblies occasionally to ensure they are in good condition.

The appearance of the TTR test set can be maintained by occasionally cleaning the case, panel and cable assemblies. Clean the outside of the carrying case with detergent and water. Dry with a clean, dry cloth. Clean the control panel with a cloth dampened with detergent and water. Do not allow water to penetrate panel holes, because damage to components on the underside may result. An all-purpose, household spray cleaner can be used to clean the panel. Polish with a soft, dry cloth, taking care not to scratch the display screen cover. Clean the cables and mating panel receptacles with isopropyl or denatured alcohol applied with a clean cloth.

Calibration

A complete performance and calibration check should be made at least once every year. This will ensure that the TTR test set is functioning and calibrated properly over the entire measurement range. The MEGGER Calibration Standard Cat. No. 550555 or Cat. No. 550055 can be used to make this check.

A simplified self-check can be performed at unity ratio. Proceed as follows:

1. Turn TTR100 power off (red button on a keypad).
2. Connect H1 lead to X1 lead, and H2 lead to X2 lead.
3. Turn TTR100 power on (green button on a keypad).

4. Select 5. SYSTEM SETUP on the main menu screen.
5. Set 3 - RESISTANCE TEST: NO.
6. Set 4 - POLARITY: NO, then return to the main menu screen.
7. Select 1 on the main menu screen. When the TRANSFORMER CONFIGURATION menu appears, select 1, then select 1 again and press enter.
8. When the main menu appears, select 2.START QUICK TEST.

WARNING

Keep the leads, which are energized, clear of ground and personnel. Keep X3 lead clear of ground and test setup.

9. Turn Ratio reading on the test result screen should be from 0.9990 to 1.0010.

Battery Maintenance

In order to take full advantage of properties of the Ni-MH battery pack and also to prevent problems due to improper use, please note the following points:

1. Charge battery only when "CHARGE BATTERY" message or low battery symbol appears.
2. Charge battery with an ambient temperature range of 0°C to 40°C.
3. If low battery sign appears during testing, there is enough battery power for approximately 1 hour of normal operation. At this point, the supplied charger may be connected to the TTR100. You may continue testing while charging the battery.
4. Do NOT leave the battery exposed to direct sunlight or temperatures below -20°C or above 45°C for storing.
5. Normally a battery will last 2 years (or 500 cycles) if used under proper conditions and not overcharged or over discharged. However, failure to satisfy conditions concerning charging, discharging, temperature, and other factors during actual use can lead to shortened life (or cycle life) damage to products and deterioration in performance due to leakage and shortened service life.

Troubleshooting

The Troubleshooting Guide, Table 7-1, is arranged to help you evaluate the reasons for TTR100 test set malfunction. The table lists possible test set malfunctions which may be encountered during operation and lists possible causes. Electronic circuit repairs should not be attempted in the field. Refer to Repair section. Refer to Section 8 for a list of spare parts.

Table 7-1. Troubleshooting Guide

MALFUNCTION	POSSIBLE CAUSE
Display stays blank after POWER switch is turned on.	▪ Battery is discharged. ▪ CONTRAST potentiometer not adjusted. ▪ Defective display or electronics.
Any error message on the screens	See ERROR MESSAGES section
Test results erratic	▪ Defective test leads (open circuit, poor connection). ▪ Problem in test specimen (poor connection). ▪ Problem in TTR100 measuring circuit. ▪ Incorrect setting of transformer configuration ▪ Incorrect connection of leads. ▪ Incorrect marking of a transformer.
Cannot obtain printout when printer is connected.	▪ Printer power not turned on. ▪ Printer battery discharged. ▪ Problem in TTR100 printer interface electronics.

Repair

Megger offers a complete repair and calibration service and recommends that its customers take advantage of this service in the event of equipment malfunction. Contact your Megger representative for instructions and a return authorization (RA) number. Equipment returned for repair should be shipped prepaid and insured and marked for the attention of the Repair Department. Please indicate all pertinent information including problem symptoms and attempted repairs. The catalog number and serial number of the test set should also be specified. Pack the TTR test set, including all cables, in a carton (original shipping carton if available) with adequate dunnage in accordance with best commercial practice. Seal the carton with waterproof tape.

Ship to: **Megger.**
Valley Forge Corporate Center
2621 Van Buren Avenue
Norristown, PA 19403

8

ORDERING INFORMATION AND SPARE PARTS LIST

Ordering Information

Item	Cat. No.
Single phase Transformer Turns Ratio Test Set	TTR100
Included Accessories	
Canvas carrying bag and Accessory Pouch	55-20008
Battery pack	35753
Universal battery charger	35757
Power supply cord	Determined by Country
Test Leads	
H winding, 6 ft (1.8 m)	35502-521
X winding, 6 ft (1.8 m)	35502-511
Software for uploading test results to a PC	35794-2
RS232 cable for connecting to a PC	33147-18
Quickstart guide	55-20013
Instruction manual	AVTMTTR100

Optional Accessories

Battery/line-powered serial thermal printer package, 120 V ac	35755-1
Battery/line-powered serial thermal printer package, 230 V ac	35755-2
Test Leads	
H winding, 12 ft (3.6 m)	35502-520
X winding, 12 ft (3.6 m)	35502-510
Semi-hard fabric transport case	35788
Additional battery pack	35753
Additional printer paper, 1 roll	27705-1
Certificate of calibration	CERT-NIST
Deluxe kit (all above optional accessories with 120 V printer)	55-10002
Deluxe kit (all above optional accessories with 230 V printer)	55-10003
Inverter cigarette adapter with power cable, 12V dc to 115V ac 60 Hz (Non –CE marked)	35973
Test Leads	
H winding, 20 ft (6 m)	35502-519
X winding, 20 ft (6 m)	35502-512

Spare Parts

Item	Megger Part Number
Front housing	55-20001
Rear housing	55-20002
Battery door	55-20003
Window, silk screened	55-20005
Knob, CONTRAST	55-20004
Quick start guide	55-20013
Keypad	55-20006
Battery pack	35753
Universal battery charger	35757
Cable, H winding, 6 ft (1.8 m)	35502-521
Cable, X winding, 6 ft (1.8 m)	35502-511
Cable, H winding, 12 ft (3.6 m)	35502-520
Cable, X winding, 12 ft (3.6 m)	35502-510
Cable, H winding, 20 ft (6 m)	35502-519
Cable, X winding, 20 ft (6 m)	35502-512

Megger.

9

GLOSSARY

	Use only in accordance with instruction manual.
ANSI	American National Standards Institute
BCT	Bushing current transformer
CEI/IEC	The initials of the official French name, Commission Electrotechnique Internationale, of the International Electrotechnical Commission.
Centiradian	Phase display option in SYSTEM SETUP screen. 1 centiradian = 0.573 degrees.
CT	Current transformer
LCD	Liquid crystal display
LTC	Load tap changer. A selector switch device used to change transformer taps with the transformer energized and carrying full load.
Safety ground stick	An insulated stick (sometimes called a hot stick) with a hook type electrode connected to ground via an insulated cable. In some discharge sticks, a resistor is connected between the electrode and the ground cable. Both are used to discharge capacitive specimens by providing a low-impedance path to ground. They must be suitable rated for the voltage and capacitance of the specimen to be discharged.
Transient	A change in the steady-state condition of voltage or current, or both.

TTR	Transformer turn ratio; a registered trademark of MEGGER.
Turns ratio	The ratio of the number of turns in a higher voltage winding to that in a lower voltage winding.

10

WARRANTY

Products supplied by Megger are warranted against defects in material and workmanship for a period of one year following shipment. Our liability is specifically limited to replacing or repairing, at our option, defective equipment. Equipment returned to the factory must be shipped prepaid and insured. This warranty does not include batteries, lamps, or other expendable items, where the original manufacturer's warranty shall apply. We make no other warranty. The warranty is void in the event of abuse (failure to follow recommended operating procedures) or failure by the customer to perform specific maintenance as indicated in this manual.

Megger.

11

INDEX

A

Accessories Supplied, 12
ANSI Transformer Winding Phase Relationship, 29
Australian Transformer Winding Phase Relationship, 47

B

Battery Maintenance, 84
Bushing Current Transformer, 23

C

Calibration, 83
CAUTION, 1, 7, 18
CEI/IEC 76-1, 1993 Transformer Winding Phase Relationship, 37
COMLink, 76
Connections, 19, 27
Connector Panel, 18
Connectors, 16
Control Panel, 17
Controls, 16
Custom Configurations, 66

D

Display, 17
Distribution Transformers with Two Secondary Windings, 20

E

Electrical, 9
EMERGENCY SHUTDOWN, 53
Environmental Conditions, 12
Error Messages, 71

F

Full Test CTs, 64
Full Test Regulator, 64

Full Test Single Phase Tapped Transformer, 63
Full Test Single Phase Transformer, 62

G

General Information, 1
General Instructions, 19
General Operating Procedure, 53
Glossary, 91

I

Indicators, 16
Installation, 76

M

MAIN MENU Screen, 55
Maintenance, 83
Menus, 53

O

Opening Display Screen, 54
Operation, 53
Optional Accessories, 13
Ordering Information, 87

P

Physical Data, 12
Principle of Operation, 15
Printer, 75
Printing a Transformer Test Report, 80

Q

Quick Test Single Phase Transformer, 59
Quick Test Three Phase Transformer, 60
Quick Test T-Type Transformers, 61

R

Receiving Instructions, i, 1
Repair, 86

S

Safety, 5
SAVED READINGS Screen, 69
Saving Test Results to Database, 81
Service, 83
Setup, 19
Setup for Testing Single-Phase Autotransformer, 21
Setup for Testing Single-Phase Transformer, 21

Setup for Testing Single-Phase, Type A (Straight Design) Step Voltage Regulator, 22
Setup for Testing Single-Phase, Type B (Inverted Design) Step Voltage Regulator, 22
Single-Phase, Two-Winding Transformers, 20
Spare Parts, 87
Specifications, 9
SYSTEM SETUP, 67

T

Test Screens, 53
TRANSFORMER CONFIGURATION Screen, 56
Transformer Winding Phase Relationship
  ANSI, 29
  Australian Standard 2374, Part 4 - 1982, 47
  CEI/IEC 76-1, 1993, 37
Troubleshooting, 85
T-Type Transformers, 26

U

Unmounted CTs, 23

V

Vector Voltage Diagrams, 27
Viewing test data on PC, 79
Viewing the Database, 81

W

WARNING, 7, 19, 23, 84
Warranty, 93

Megger.

AVO INTERNATIONAL

Instruction Manual AVTM550503

for

Three-Phase TTR®
Transformer Turn Ratio Test Set

Catalog No. 550503

Revised October 1999
Rev. A

High-Voltage Equipment
Read the entire manual before operating.

Aparato de Alto Voltaje
Antes de operar este producto lea este manual enteramente.

AVO International
P.O. Box 9007
Valley Forge, PA 19485-1007
610-676-8500

Three-Phase TTR®
Transformer Turn Ratio Test Set
Instruction Manual

Copyright Notice

Copyright© 1999 by AVO International. All rights reserved.

Disclaimer Notice

The information contained in this manual is believed to be adequate for the intended use of the product. If the product or its individual instrument are used for purposes other than those specified herein, confirmation of their validity and suitability must be obtained from AVO International. Refer to the warranty information included at the end of this instruction manual. Specifications are subject to change without notice.

TABLE OF CONTENTS

1 INTRODUCTION 1-1
Receiving Instructions 1-1
General Information 1-1

2 SAFETY 2-1

3 SPECIFICATIONS 3-1
Electrical 3-1
Environmental Conditions 3-2
Physical Data 3-3
Accessories Supplied 3-3
Optional Accessories 3-3

4 DESCRIPTION 4-1
Principle of Operation 4-1
TTR Operational Flow Chart 4-2
Controls, Indicators, and Connectors 4-6

5 SETUP AND CONNECTIONS 5-1
General Instructions 5-1
Single-Phase, Two-Winding Transformers 5-1
Three-Phase, Two-Winding Transformers 5-4
Three-Phase, Three-Winding Transformers 5-5
Current Transformers (CTs) 5-6
T-Type Transformers 5-11
Connections and Vector Voltage Diagrams 5-13

6 OPERATION 6-1
General Operating Procedure 6-1
Description of Menus and Test Screens 6-1

Error Messages 6-21
Remote Control Operation 6-22
Use with the Optional Printer 6-23
Use with the Optional Inverter 6-24
Using AVOLink Program 6-25

7 SERVICE 7-1
Maintenance 7-1
Fuse Replacement 7-1
Calibration 7-2
Troubleshooting 7-3
Repair 7-4

8 ORDERING INFORMATION AND SPARE PARTS LIST 8-1
Ordering Information 8-1
Spare Parts 8-2

9 GLOSSARY 9-1

10 WARRANTY 10-1

11 INDEX 11-1

LIST OF ILLUSTRATIONS

Figure 4-1. Three-Phase TTR Test Set Block Diagram 4-1
Figure 4-2. Quick Test flow chart 4-2
Figure 4-3. Full Test Setup with Recall Custom Settings 4-3
Figure 4-4. System Setup Menu 4-4
Figure 4-5. Saved Data Menu with Print Header 4-5
Figure 4-6. Three-Phase TTR Control Panel 4-6
Figure 4-7. Left Side Connector Panel 4-7
Figure 4-8. Right Side Connector Panel 4-7
Figure 5-1. Setup for Testing Single-Phase Transformer 5-2
Figure 5-2. Setup for Testing Single-Phase Autotransformer 5-2
Figure 5-3. Setup for Testing Single-Phase, Type A (Straight Design) Step Voltage Regulator 5-3
Figure 5-4. Setup for Testing Single-Phase, Type B (Inverted Design) Step Voltage Regulator 5-3
Figure 5-5. Setup for Testing Unmounted Current Transformer 5-7
Figure 5-6. Setup for Testing Taps on Multiple Tap CT 5-7
Figure 5-7. Setup for Testing BCT Mounted on Single-Phase Two-Winding Transformer 5-8
Figure 5-8. Setup for Testing BCT Mounted on Delta Winding on a Three-Phase Power Transformer 5-9
Figure 5-9. Setup for Testing BCT Mounted on Wye Winding of a Three-Phase Transformer 5-10
Figure 5-10. Winding Connections and Phase Relationship 5-15
Figure 6-1. Opening Display Screen 6-1
Figure 6-2. Main Menu Screen 6-2
Figure 6-3. Quick Test Setup Screen 6-4
Figure 6-4. Initial Quick Test Result Screen 6-5
Figure 6-5. Final Quick Test Result Screen 6-6
Figure 6-6. FULL TEST SETUP 1 Screen 6-7
Figure 6-7. FULL TEST SETUP 2 Screen 6-9
Figure 6-8. FULL TEST SETUP 3 Screen 6-11
Figure 6-9. Three-Phase Transformer Test Result Screen 6-12
Figure 6-10. Phase A Test Result Screen 6-13

Figure 6-11. The Main Menu Screen After Selection of a Custom Transformer Setting..... 6-15
Figure 6-12. SYSTEM SETUP Screen..... 6-16
Figure 6-13. Language Screen..... 6-18
Figure 6-14. SAVED DATA Screen..... 6-19
Figure 6-15. Recall (or Save) Custom Settings Screen..... 6-20
Figure 6-16a. Sample Test Report Header..... 6-23
Figure 6-16b. Sample Single Phase Test Report..... 6-23
Figure 6-16c. Sample Three Phase Test Report..... 6-24
Figure 6-17. Report Printout..... 6-28

LIST OF TABLES

Table 5-1. Test Lead Markings for Single-Phase Transformers..... 5-2
Table 5-2. Test Lead Markings for Three-Phase Transformers..... 5-4
Table 5-3. T-type Transformer Winding Phase Relationship..... 5-11
Table 5-4. ANSI Transformer Winding Phase Relationship..... 5-17
Table 5-5. CEI/IEC 76-1:1993 Transformer Winding Phase Relationship..... 5-26
Table 5-6. Transformer Winding Phase Relationship (Australian Std. 2374, Part 4 - 1982).... 5-36
Table 7-1. Troubleshooting Guide..... 7-3

1 INTRODUCTION

Receiving Instructions

Check the equipment received against the packing list to ensure that all materials are present. Notify AVO International of any shortage. **Telephone 610-676-8500**.

Examine the instrument for damage received in transit. If any damage is discovered, file a claim with the carrier at once and notify AVO International or its nearest authorized sales representative, giving a detailed description of the damage.

This instrument has been thoroughly tested and inspected to meet rigid specifications before being shipped. It is ready for use when set up as indicated in this manual.

General Information

The Three-Phase TTR® Test Set is fully automatic, self-checking, self-calibrating, menu-driven unit. The test set measures the turn ratio, phase shift, and excitation current of power, distribution, and instrument transformers. A "-47" suffix added to the catalog number denotes a 230-V input power supply, rather than the standard 120-V supply. The test set is a portable instrument housed in a sturdy plastic case with lid and carrying strap. The inside bottom half of the case is nickel coated. A canvas carrying bag is supplied to hold all accessories.

The test set can be used to test single-phase and three-phase transformers, both with and without taps in accordance with the requirements of the IEEE C57.12.90 – 1997 standards. For three-phase measurements, the test set is connected to all three phases of the transformer to be tested. The TTR lead selection circuitry permits automatic measurement of all phases without changing connections. This feature eliminates the need to refer to hook-up charts when testing three-phase transformers. Turn ratio, phase shift and excitation current readings are displayed on a large LCD. Transformer excitation current as well as phase shift angle helps to detect transformer shorted turns or an unequal number of turns connected in parallel. Operating condition (error) messages identify incorrect test connections, abnormal operating condition, or winding problems. Test results can be saved, printed out on an optional printer, or uploaded to a personal computer (PC).

Features include:

- Fully automatic operation.
- Self-checking at power-up.
- Self-calibration at each measurement.
- User-friendly, menu-driven operation.
- Test turn ratio, phase shift (in both degree and centiradian), and excitation current.
- Easy measuring of regular windings, tertiary windings, and CTs.
- Storage capacity for up to 200 tests for retrieving, printing out, or uploading to a PC.
- Saving up to 9 custom transformer settings for faster and easier testing.
- Checking reverse polarity at start of each test.

- Y2K compatible date setting.
- External printer records test data.
- External PC or laptop can be connected instead of a printer to transfer test results and to provide full transformer test report.
- Quick test mode provides the fastest testing of a transformer.
- Three excitation test voltages: 80 V, 40 V, and 8 V.
- Testing to ANSI, IEC, or Australian standards.
- Leads marked to ANSI, IEC, and Australian standards.
- Large, easy-to-read LCD shows alphanumeric data
- Meets the requirements of both the European EMC and Low Voltage Directives.
- Trouble-free operation in switchyards under electrostatic and magnetic interference conditions.

2 SAFETY

The test set and the specimen to which it is connected are a possible source of high-voltage electrical energy and all persons making or assisting in tests must use all practical safety precautions to prevent contact with energized parts of the test equipment and related circuits. Persons actually engaged in the test must stand clear of all parts of the complete high-voltage circuit, including all connections, unless the test set is de-energized and all parts of the test circuit are grounded. Persons not directly involved with the work must be kept away from test activities by suitable barriers, barricades, or warnings.

Treat all terminals of high-voltage power equipment as a potential electric shock hazard. There is always the possibility of voltages being induced at these terminals because of proximity to energized high-voltage lines or equipment. Always disconnect test leads from power equipment before attempting to disconnect them at the test set. The ground connection must be the first made and the last removed. Any interruption of the grounding connection can create an electric shock hazard.

This instrument operates from a single-phase power source. It has a three-wire power cord and requires a two-pole, three-terminal, live, neutral, and ground type connector. The voltage to ground from the live pole of the power source must be within the following rated operating voltage:

For Cat. No 550503	120 V ±10%, single phase, 50/60 ±2 Hz
For Cat. No. 550503-47	230 V ±10%, single phase, 50/60 ±2 Hz

The neutral pole must be at ground potential. Before making connection to the power source, determine that the instrument rating matches the voltage of the power source and has a suitable two-pole, three-terminal grounding type connector.

The power input plug must be inserted only into a mating receptacle with a ground contact. Do not bypass the grounding connection. Any interruption of the grounding connection can create an electric shock hazard. Determine that the receptacle is properly wired before inserting the plug.

For test sets energized with 230 V input, the neutral terminal of the input supply cord (white or blue lead) must be connected to the neutral pole of the line power source. The ground terminal of the input supply cord (green or yellow/green lead) must be connected to the protective ground (earth) terminal of the line power source. The black or brown cord lead is the live (hot) lead.

To avoid electric shock hazard, operating personnel must not remove the instrument from the case. Any repair or component replacement must be performed by qualified service personnel.

The control circuits of the instrument are protected by two mains circuit fuses. These fuses are replaceable by the operator. To avoid electric shock and fire hazard, use only the fuse specified in Section 3, Specifications, that is identical in respect to type, voltage rating and current rating. Refer to the Fuse Replacement procedure in the Service section.

WARNING
Before replacing the fuses, disconnect the power input plug from the live power source.

AVO International has made formal safety reviews of the initial design and any subsequent changes. This procedure is followed for all new products and covers areas in addition to those included in applicable standards. Regardless of these efforts, it is not possible to eliminate all hazards from electrical test equipment. For this reason, every effort has been made to point out in this instruction manual the proper procedures and precautions to be followed by the user in operating this equipment and to mark the equipment itself with precautionary warnings where appropriate. It is not possible to foresee every hazard which may occur in the various applications of this equipment. It is therefore essential that the user, in addition to following the safety rules in this manual, also carefully consider all safety aspects of the test before proceeding.

- Safety is the responsibility of the user.
- Follow your company safety procedures.
- Misuse of this high-voltage equipment can be extremely dangerous.
- The purpose of this equipment is limited to use as described in this manual. Do not use the equipment or its accessories with any device other than specifically described.
- Never connect the test set to energized equipment.
- Do not use the test set in an explosive atmosphere.
- Corrective maintenance must only be performed by qualified personnel who are familiar with the construction and operation of the test set and the hazards involved.
- Refer to IEEE 510 - 1983, *IEEE Recommended Practices for Safety in High-Voltage and High-Power Testing*, for additional information.

If the test equipment is operated properly and all grounds correctly made, test personnel need not wear rubber gloves. As a routine safety procedure, however, some users require that rubber gloves be worn, not only when making connections to the high-voltage terminals, but also when manipulating the controls. AVO International considers this an excellent safety practice.

Users of equipment should note that high-voltage discharges and other sources of strong electric or magnetic field may interfere with the proper functioning of heart pacemakers. Persons with heart pacemakers should obtain expert advice on the possible risks before operating this equipment or being close to the equipment during operation.

Warning and caution notices are used throughout this manual where applicable and should be strictly observed. These notices appear in the format shown below and are defined as follows:

WARNING
Warning, as used in this manual, is defined as a condition or practice which could result in personal injury or loss of life.

CAUTION
Caution, as used in this manual, is defined as a condition or practice which could result in damage to or destruction of the equipment or apparatus under test.

This page intentionally left blank.

3 SPECIFICATIONS

Electrical

Input Power

Cat. No. 550503: 120 V ac ±10%, single phase, 50 ±2 Hz or 60 ±2 Hz, 100 VA
IEC 1010-1 installation category II

Cat. No. 550503-47: 230 V ac ±10%, single phase, 50 ±2 Hz or 60 ±2 Hz, 100 VA
IEC 1010-1 installation category II

Pollution Degree

TTR is designed for Pollution Degree II

Protective Devices

Fuses (2): Cat. No. 550503: Type T, 250 V, 1 A (IEC 127 designation)
Cat. No. 550503-47: Type T, 250 V, 0.5 A (IEC 127 designation)

High voltage and low voltage measurement circuit shorting relays

Heavy duty varistors, transient voltage suppressors, and gas surge voltage protectors

Output Test Voltage and Current

3 test voltages: 80 V rms, 40 V rms, 8 V rms.
Current: up to 500 mA

Test Frequency

Same as line frequency.

Loading of Test Transformer

Less than 0.2 VA

Measuring Ranges

Turn ratio: 80 V ac: 0.8 to 10,000, 5 digit resolution
40 V ac: 0.8 to 10,000, 5 digit resolution
8V ac: 0.8 to 4,000, 5 digit resolution

Current: 0 to 500 mA, 3 digit resolution
Phase deviation: ± 90 degrees, 1 decimal point for the minutes display, 2 decimal point for the degree display, 2 decimal points for the centiradian display

Accuracy

Turn ratio:	80 V ac:	±0.1% (0.8 to 2000)
		±0.15% (2001 to 4000)
		±0.25% (4001 to 10000)
	40 V ac:	±0.1% (0.8 to 2000)
		±0.15% (2001 to 4000)
		±0.3% (4001 to 10000)
	8 V ac:	±0.1% (0.8 to 2000)
		±0.25% (2001 to 4000)

Current (rms): ±(2% of reading + 1 digit)
Phase deviation: ±3 minutes

Measurement Method

In accordance with ANSI/IEEE C57.12.90

Transformer Winding Phase Relationship

ANSI C57.12.70-1978
CEI/IEC 76-1:1993 and Publication 616:1978
AS-2374, Part 4-1982 (Australian Standard)

Measuring Time

10 to 20 seconds depending on mode of operation and type of transformer

Display

LCD module, 256 x 128 dots. This translates to 42 characters by 16 lines.

Memory Storage

Up to 200 test results

Interface

RS232C

Environmental Conditions

Operating temperature range:	23° to 122°F (-5 to 50 °C)
Storage temperature range:	-58° to 140°F (-50 to 60 °C)
Relative humidity:	0 to 90% noncondensing (operating)
	0 to 95% noncondensing (storage)

Physical Data

Dimensions:	17.5 x 10.5 x 6.9 in. (44.5 x 26.5 x 17.5 cm) (L x W x H)
Weight (test set):	16.5 lb. (7.5 kg)
Case:	Light gray color ABS case with lid and carrying strap

Accessories Supplied

- Canvas carrying bag for test leads: 18 x 12 x 12 in. (45.7 x 30.5 x 30.5 cm) (H x W x D), with handles, full length zipper, and adjustable strap with shoulder pad.
- Power supply cord, 8 ft (2.5 m)
- Ground lead, 15 ft (4.6 m)
- H winding test lead, 10 ft (3.1 m), three-phase connection, shielded, clip-end terminated.
- H winding test lead extension, 33 ft (10 m), shielded.
- X winding test lead, 10 ft (3.1 m), three-phase connection, shielded, clip-end terminated.
- X winding test lead extension, 33 ft (10 m), shielded.
- Hand-held switch for remote operation.
- Software for uploading test results to a PC
- RS232 cable for connecting the TTR to a PC.
- Bushing clips (6).
- Nine cord lock strips.
- Instruction manual.

Optional Accessories

- Battery/line-powered serial thermal printer (p/n 33842).
  Printed out data includes date, transformer diagram number according to ANSI, IEC or AS (Australian) standard, transformer under test ID, calculated and measured turn ratios, ratio deviations, phase deviation angle, test voltage, exciting current values, and TTR serial number.
- Printer interface cable for connecting printer to the TTR (p/n 35270).
- Shelf for mounting printer on the side of the TTR (p/n 30915-206).
- X winding test lead, 10 ft (3.1 m), single-phase connection, shielded, clip-end terminated
- (p/n 30915-507).
- H winding test lead, 10 ft (3.1 m), single-phase connection, shielded, clip-end terminated
- (p/n 30915-506).
- TTR Calibration Standard (Cat. No.550555).
- Software for two-way communication between the TTR and PC (p/n 35303).
- Inverter, 12 V dc to 120 V ac, 60 Hz, with 3-ft (0.91 m) cigarette adapter cord (p/n 35271-1)
- Inverter, 12 V dc to 120 V ac, 50 Hz, with 3-ft (0.91 m) cigarette adapter cord (p/n 35271-3)
- Inverter, 12 V dc to 230 V ac, 60 Hz, with 3-ft (0.91 m) cigarette adapter cord (p/n 35271-2)
- Inverter, 12 V dc to 230 V ac, 50 Hz, with 3-ft (0.91 m) cigarette adapter cord (p/n 35271-4)

This page intentionally left blank.

4 DESCRIPTION

Principle of Operation

The TTR test set provides accurate measurements of the transformer input and output voltages and then calculates a transformer turn ratio. The TTR also measures phase shift between primary and secondary windings of a transformer and transformer excitation current.

A block diagram of the TTR test set is shown in Figure 4-1. The excitation voltage transformer converts the main voltage into the test excitation voltage of a transformer. The excitation voltage transformer outputs three test voltages: 80 V, 40 V, and 8 V. The transformer under test excitation current is measured by the excitation current measurement circuitry. The test excitation voltage is applied to a transformer under test through the H winding lead select circuitry. This circuitry automatically excites the transformer windings depending on winding connections. The same excitation voltage is applied to the reference conditioning circuitry.

The transformer under test output voltage is connected to the X winding lead select circuitry. This circuitry automatically connects the transformer winding being tested to the range conditioning circuitry.

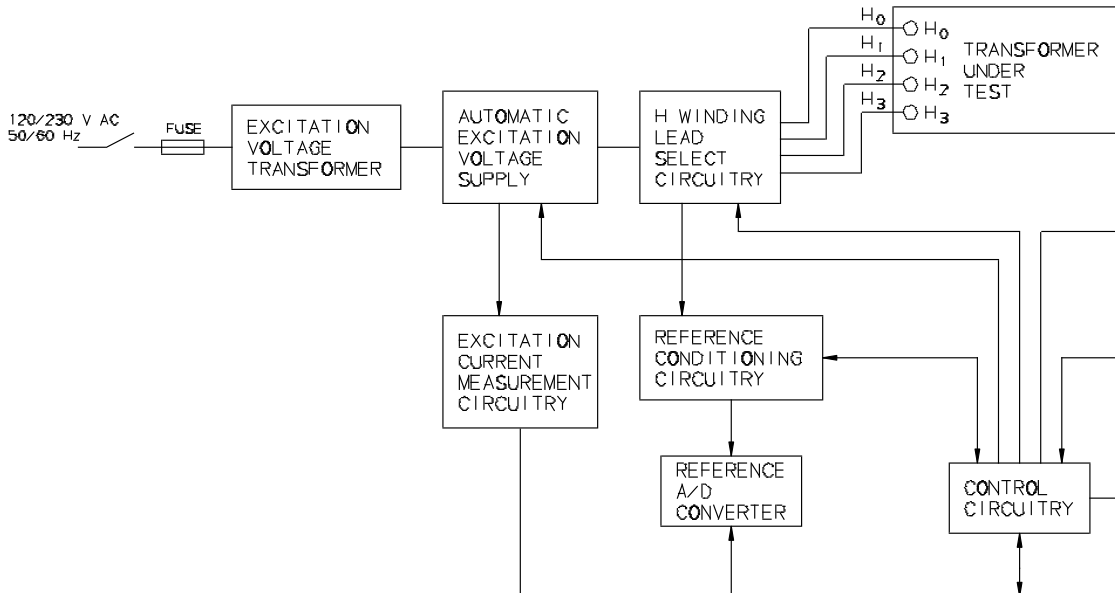

Figure 4-1. Three-Phase TTR Test Set Block Diagram

The range and reference conditioning circuitries isolate a transformer under test from the TTR measurement circuitry and provide conditioning of the input and output measurement signals. The programmable gain amplifier is used for additional conditioning of the transformer output signals.

Both the reference A/D converter and the range A/D converter are used to convert the analog measurement signals to their digital replica. The converted output digital signals are applied to the microprocessor.

The microprocessor orchestrates all steps of the TTR test set operation. It provides proper sequence of operation, gathers and calculates the test results, provides interfacing with the display, RS232/printer port, and the control circuitry. The control circuitry interfaces with virtually all function blocks described, providing proper control sequence of the TTR test set operation.

TTR Operational Flow Chart

This flow chart illustrates the sequence of operation in a graphical manner. The Startup screen is the first screen that appears when the TTR is powered up. This is where the self-test will be performed and the embedded software version is indicated along with the present date and time. The Startup Screen always goes to the Main Menu. This is where the user interface commences.

NOTE: See also page 6-1 for description of operation and menu/test screen.

NOTE: Use the KEY on Figure 4.2 to identify the operation or function of the flow chart objects.

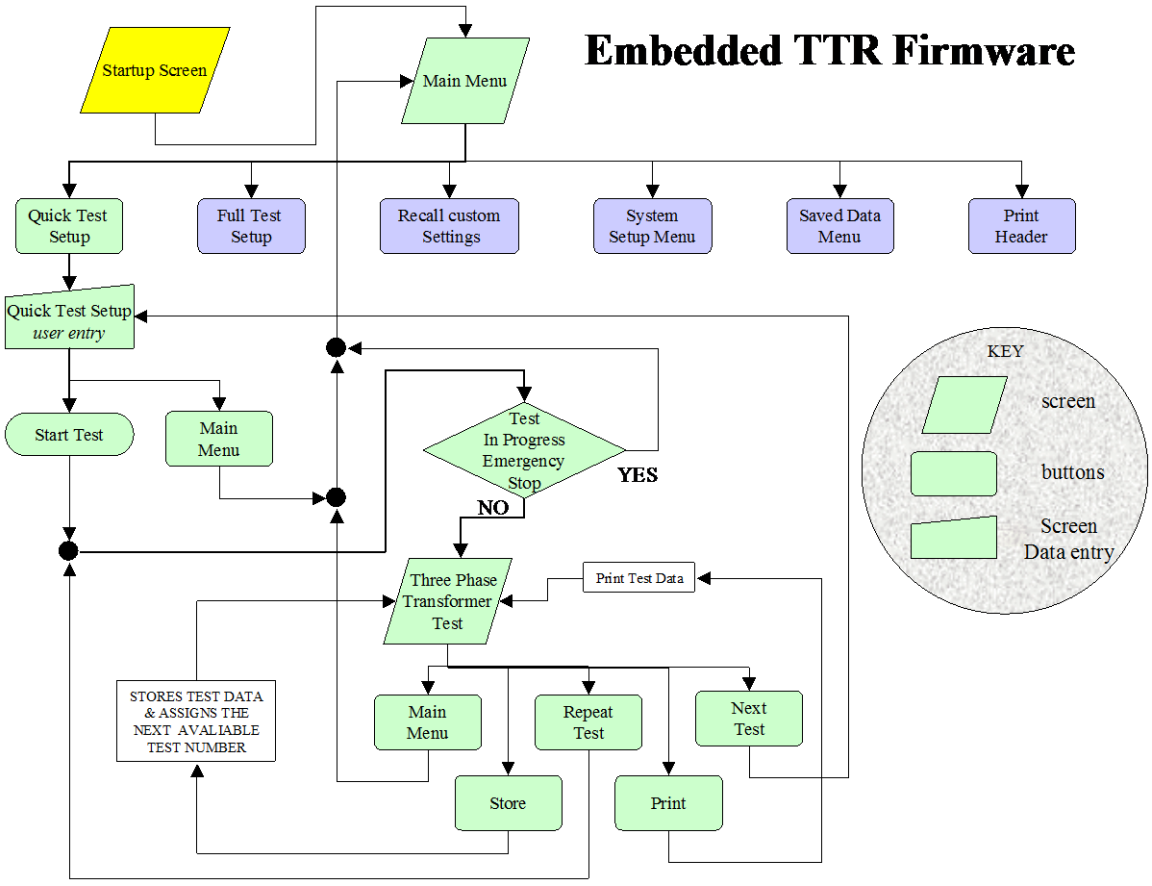

Figure 4-2. Quick Test flow chart

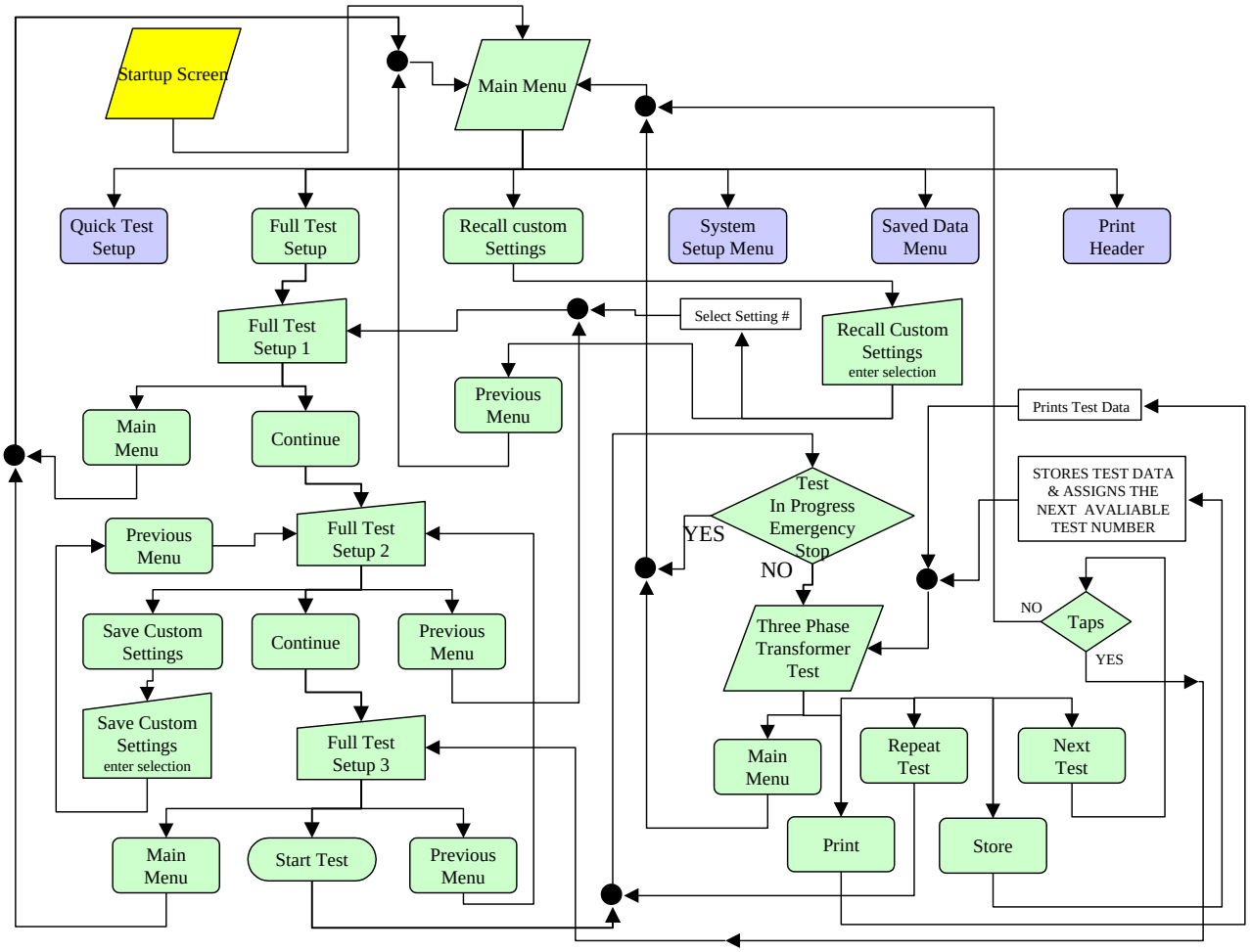

Figure 4-3. Full Test Setup with Recall Custom Settings

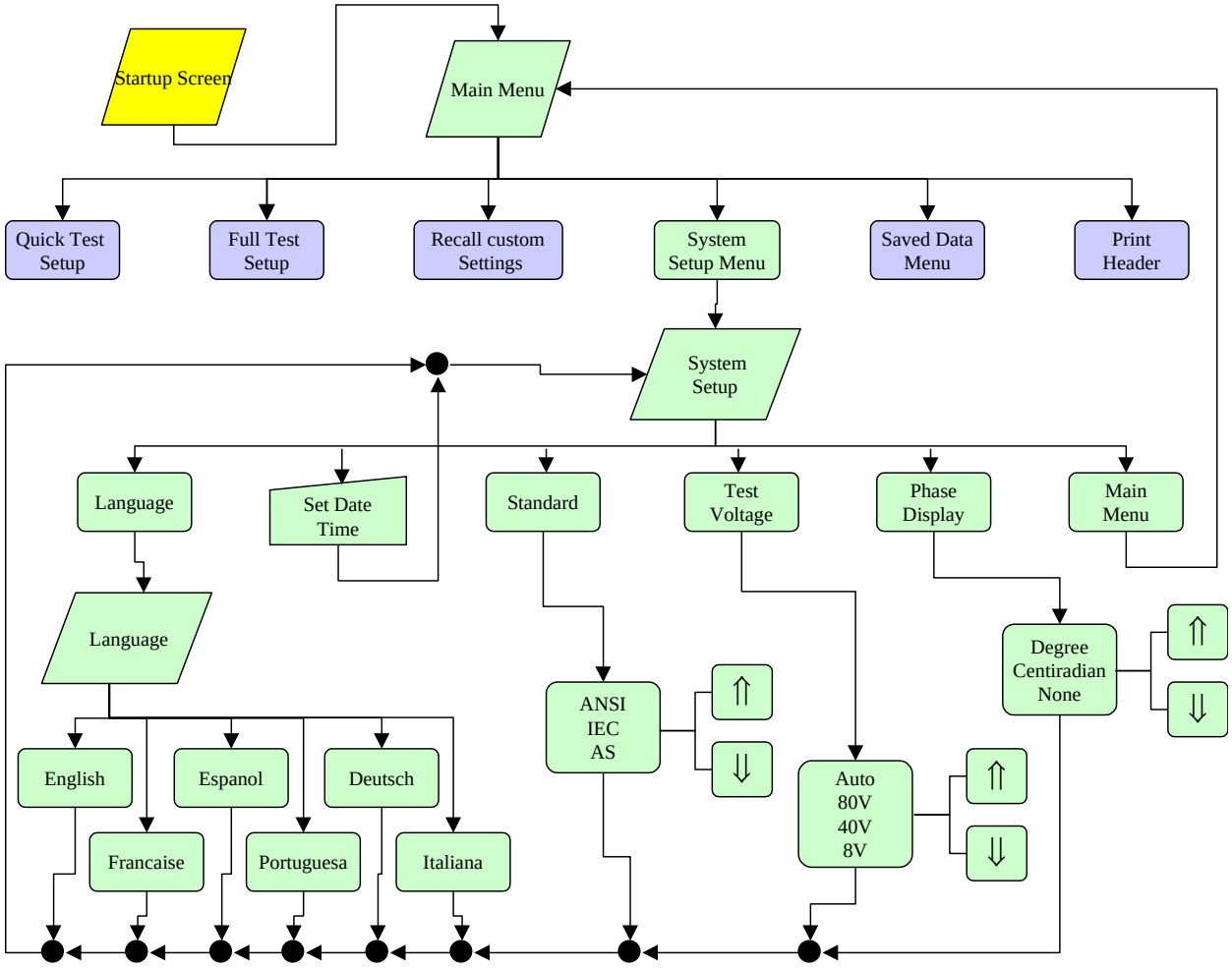

Figure 4-4. System Setup Menu

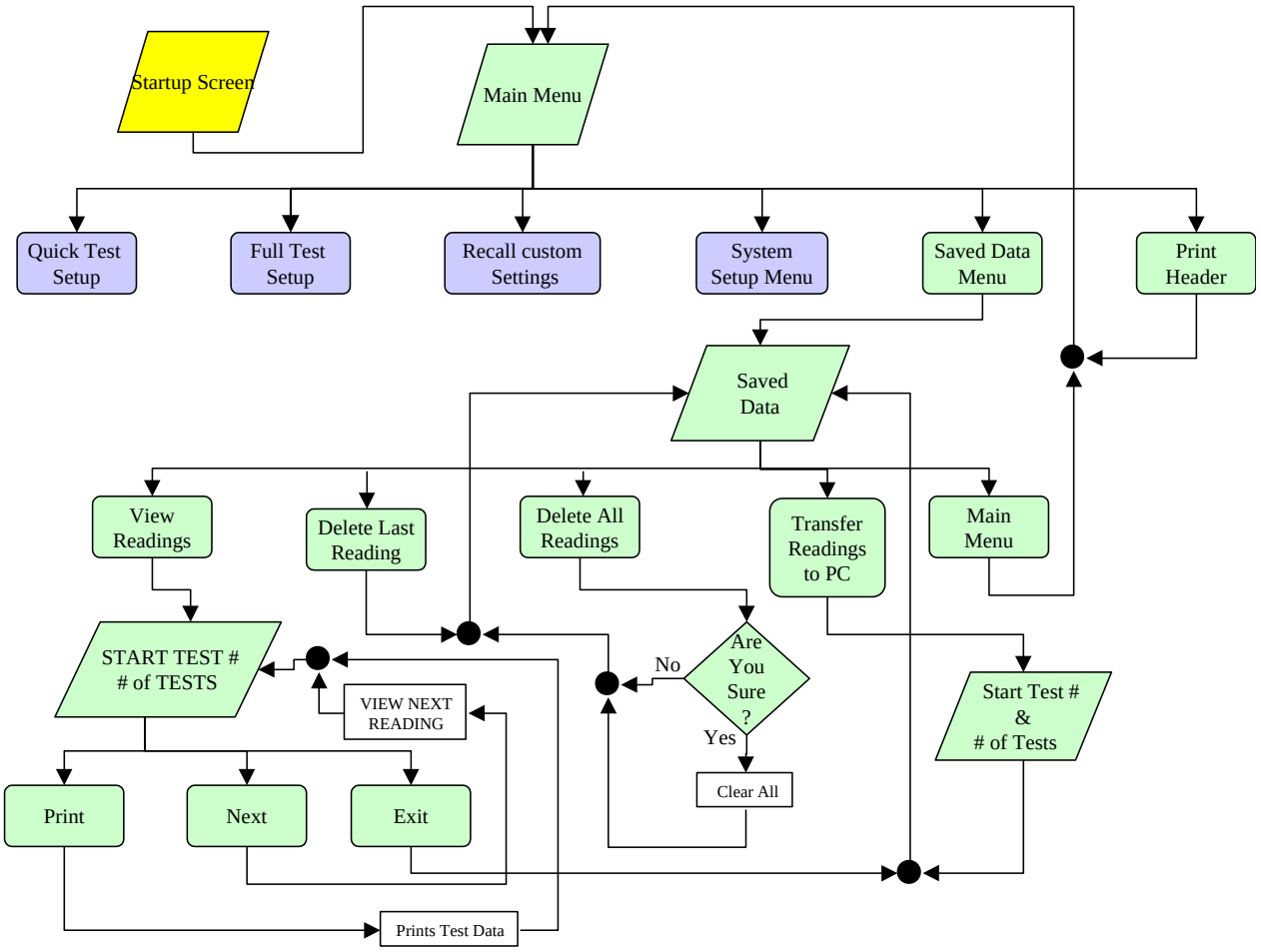

Figure 4-5. Saved Data Menu with Print Header

Controls, Indicators, and Connectors

(Figs. 4-2 to 4-4)

CONTRAST	This knob adjusts the viewing resolution of the screen.
TEST VOLTAGE ON	Red indicator lamp indicates when lit that test voltage is being supplied to a transformer.
EMERGENCY TEST OFF	This red push button interrupts testing. When pressed, the switch is locked in off position. To reset the switch, twist the button in the direction indicated by the arrows.
DISPLAY SCREEN	LCD shows menus and test information.
KEYPAD	16-button keypad for entering menu selections and navigating through the various screens. In addition to numbered keys 1 through 9, plus 0, there is a CLR (clear) button, ↑R (raise or right) button, ↓L (lower or left) button, an ENT (enter) button, a decimal point button, and an * (asterisk) button. An audible tone confirms that you have successfully pressed a button.

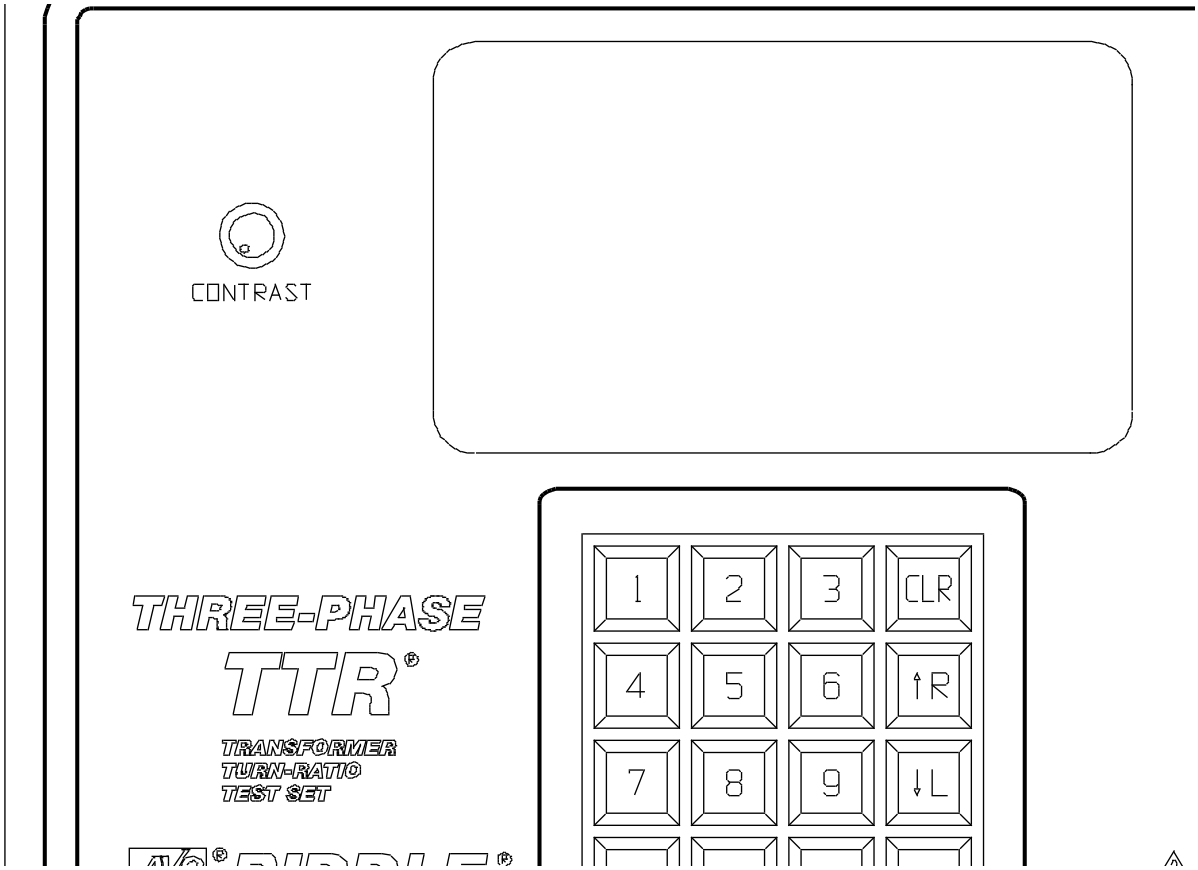

Figure 4-6. Three-Phase TTR Control Panel

GROUND	Wing-nut terminal allows connection of test set to earth ground.
CABLE H	Plug receptacle for connecting test leads to the high-voltage (H) winding of a transformer
CABLE X	Plug receptacle for connecting test leads to the low-voltage (X) winding of a transformer.
AC POWER 120 V 50/60 Hz 100 VA MAX	On/off power switch and input power receptacle provides power to the test set.
FUSE IEC 127 T 1 A/250 V	Fuse receptacle and rating.
RS232/PRINTER	Plug receptacle for connecting a printer or connecting to a PC.

Figure 4-7. Left Side Connector Panel

Figure 4-8. Right Side Connector Panel

This page intentionally left blank.

5 SETUP AND CONNECTIONS

General Instructions

When testing high-voltage transformers, caution must be used at all times and all safety precautions followed. Read and understand all safety information contained in Section 2, Safety.

WARNING
Ensure that the transformer to be tested is completely de-energized. Check every winding. Ensure that all terminals of the transformer are disconnected from line or load at the transformer. Connections to ground may be left in place.

The following setup and connection instructions pertaining to ratio, polarity, and phase relation assume that the transformer under test, connections, and terminal markings comply with the requirements of ANSI C57.12.70-1978 *American National Standards Terminal Markings and Connections for Distribution and Power Transformers*. The H test leads of the test set are the exciting (high voltage) leads (8 V, 40 V, or 80 V).

Single-Phase, Two-Winding Transformers

WARNING
Never interchange connections between the high- and low-voltage transformer terminals. Failure to observe proper connections will result in a safety hazard and may result in damage to the test set or transformer.

Perform the following setup procedure for single-phase, two-winding transformers:

1. Connect the wing-nut ground terminal of the test set to a low-impedance earth ground using the 15-ft (4.6 m) ground lead supplied.

2. Using two conductor H and X test leads, connect to the respective H and X winding receptacles of the test set. Make sure that the connectors are screwed tight to the receptacle.

3. Connect the heavy-duty clips marked H1 and H2 of the test lead to the corresponding (high-voltage winding) terminals of the transformer under test.

4. Connect the heavy-duty clips marked X1 and X2 of the test lead to the corresponding (low-voltage winding) terminals of the transformer under test. Figures 5-1 and 5-2 show test setups for single-phase transformers. Figures 5-3 and 5-4 show test setups for regulators.

NOTE: When using a three-phase cable set, connect heavy-duty clips marked H1, H2 and X1, X2 to the corresponding terminals of the transformer under test. The unused clips should be kept clear of ground and personnel.

Figure 5-1. Setup for Testing Single-Phase Transformer

Figure 5-2. Setup for Testing Single-Phase Autotransformer

To test windings other than H1 – H2 and X1 – X2, ensure that the heavy-duty clip marked H1 is connected to the lower numbered terminal and H2 to the higher numbered terminal of the high-voltage winding. Similarly, X1 and X2 should be connected to the low-voltage winding. Test lead markings for the ANSI, CEI/IEC, and Australian standards are as shown in Table 5-1.

Table 5-1. Test Lead Markings for Single-Phase Transformers

Test Lead Marking			Transformer Terminal Voltage	Heavy-Duty Clip Boot Color	Test Lead Color Band
ANSI	CEI/IEC	Australian			
H1	1 U	A_2	High	Red	Red
H2	1 V	A_1	High	Red	Yellow
X1	2 U	a_2	Low	Black	Red
X2	2 V	a_1	Low	Black	Yellow

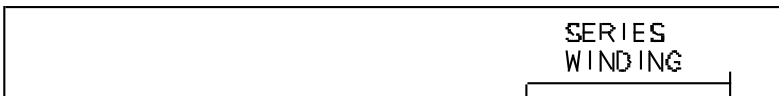

Figure 5-3. Setup for Testing Single-Phase, Type A (Straight Design) Step Voltage Regulator

Figure 5-4. Setup for Testing Single-Phase, Type B (Inverted Design) Step Voltage Regulator

Three-Phase, Two-Winding Transformers

Perform the following setup procedure for three-phase, two-winding transformers:

1. Connect the wing-nut ground terminal of the test set to a low-impedance earth ground using the 15 ft (4.6 m) ground lead supplied.

2. Using four conductor H and X test leads, connect to the respective H and X winding receptacles of the test set. Make sure that the connectors are screwed tight to the receptacles.

3. Connect the heavy-duty clips marked H0, H1, H2, and H3 of the test lead to the corresponding (high-voltage winding) terminals of the transformer under test.

4. Connect the heavy-duty clips marked X0, X1, X2 , and X3 of the test lead to the corresponding (low-voltage winding) terminals of the transformer under test.

WARNING

Never interchange connections between the high- and low-voltage transformer terminals. Failure to observe proper connections will result in a safety hazard and may result in damage to the test set or transformer.

The unused H0 and X0 terminals should be kept clear of ground and personnel because they could become energized during the test. Refer to Table 5-2 for test lead markings.

With delta connected windings, H0 or X0 is not used. With wye connected windings, a neutral connection is normally available.

Table 5-2. Test Lead Markings for Three-Phase Transformers

Test Lead Marking			Transformer Terminal Voltage	Heavy-Duty Clip Boot Color	Test Lead Color Band
ANSI	CEI/IEC	Australian			
H0	1N	N	Neutral	Red	White
H1	1U	A_2/A_4	High	Red	Red
H2	1V	B_2/B_4	High	Red	Yellow
H3	1W	C_2/C_4	High	Red	Blue
X0	2N	N	Neutral	Black	White
X1	2U	$a_1/a_2/a_4$	Low	Black	Red
X2	2V	$b_1/b_2/b_4$	Low	Black	Yellow
X3	2W	$c_1/c_2/c_4$	Low	Black	Blue

Note: According to Australian standard, wye and delta transformer winding connections have a numerical suffix of 1 and 2. The zigzag transformers have a numerical suffix of 4. See Table 5-6.

Three-Phase, Three-Winding Transformers

This type of transformers has primary, secondary and tertiary windings. Primary and secondary windings are tested as a regular three-phase, two-winding transformer. To test tertiary winding, perform the following setup procedure:

1. Connect the wing-nut ground terminal of the test set to a low-impedance earth ground using the 15 ft (4.6 m) ground lead supplied.

2. Using four conductor H and X test leads, connect to the respective H and X winding receptacles of the test set. Make sure that the connectors are screwed tight to the receptacles.

3. Connect the heavy-duty clips marked H0, H1, H2, and H3 of the test lead to the corresponding (high-voltage winding) terminals of the transformer under test.

4. Connect the heavy-duty clips marked X0, X1, X2 , and X3 of the test lead to the corresponding tertiary (low-voltage winding) terminals (Y0, Y1, Y2, and Y3) of the transformer under test.

WARNING
Never interchange connections between the high- and low-voltage transformer terminals. Failure to observe proper connections will result in a safety hazard and may result in damage to the test set or transformer.

The unused H0 and X0 terminals should be kept clear of ground and personnel because they could become energized during the test. Refer to Table 5-2 for test lead markings.

With delta connected windings, H0 or X0 is not used. With wye connected windings, a neutral connection is normally available.

Current Transformers (CTs)

Connections to CTs are made backwards compared to power or potential transformers. The H terminals on the test set must be connected to the X terminals on the CT; and the X terminals on the test set must be connected to the H terminals on the CT.

WARNING
Failure to observe proper connections will result in a safety hazard and may result in damage to the test set or CT. Failure to observe voltage rating of low-current X winding may result in damage to the CT.

NOTE: Dots on the housing of the transformer are commonly used to identify terminals of the same polarity.

Unmounted CTs

1. Connect the wing-nut ground terminal of the test set to a low-impedance earth ground using the 15-ft (4.6 m) ground cable supplied.

2. Use two conductor H and X test leads and connect as follows and as shown in Figure 5-5.

3. Connect the heavy-duty clips marked H1 and H2 of the test lead to the respective X1 and X2 terminals of the CT.

4. Connect the heavy-duty clips marked X1 and X2 of the test lead to the respective H1 and H2 terminals of the CT. Ensure correct polarity.

Figure 5-6 shows the setup for testing the taps on a multiple-tap CT.

Bushing Current Transformer (BCT) Mounted on Single-Phase, Two-Winding Transformer

A turn-ratio test can be performed on a BCT after it has been mounted on a circuit breaker or power transformer entrance bushing. The test can be performed without removal of the BCT from the equipment. Proceed as follows and as shown in Figure 5-7.

1. Use two conductor H and X test leads.

2. Short-circuit the winding on the opposite voltage side of the power transformer core, using jumper leads.

3. Connect the heavy-duty clips marked H1 and H2 of the test leads to the respective X1 and X2 terminals of the BCT.

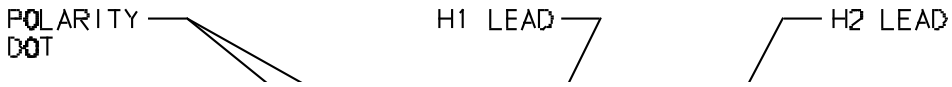

Figure 5-5. Setup for Testing Unmounted Current Transformer

Figure 5-6. Setup for Testing Taps on Multiple Tap CT

4. Connect the heavy-duty clip marked X1 to the power transformer terminal on which the BCT is mounted and the X2 heavy-duty clip to the terminal on the opposite side of the power transformer winding (H2 side of BCT). Check to make sure that the BCT is mounted with proper polarity with respect to power transformer entrance bushing and that connection polarities are correct.

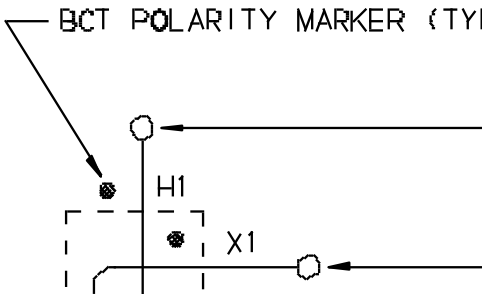

Figure 5-7. Setup for Testing BCT Mounted on Single-Phase Two-Winding Transformer

BCTs Mounted on Three-Phase Transformers

A turn-ratio test can be performed on all three BCTs using a single setup. Figure 5-8 shows how to make the proper connections when the BCTs are mounted on a typical delta winding and Figure 5-9 when mounted on a typical wye winding.

1. Use four conductor H and X test leads.

2. Short-circuit all windings on the opposite voltage side of the power transformer core using jumper leads.

3. Check to make sure that all BCTs are mounted with proper polarity with respect to the power transformer entrance bushing. Ensure that all connection polarities are correct.

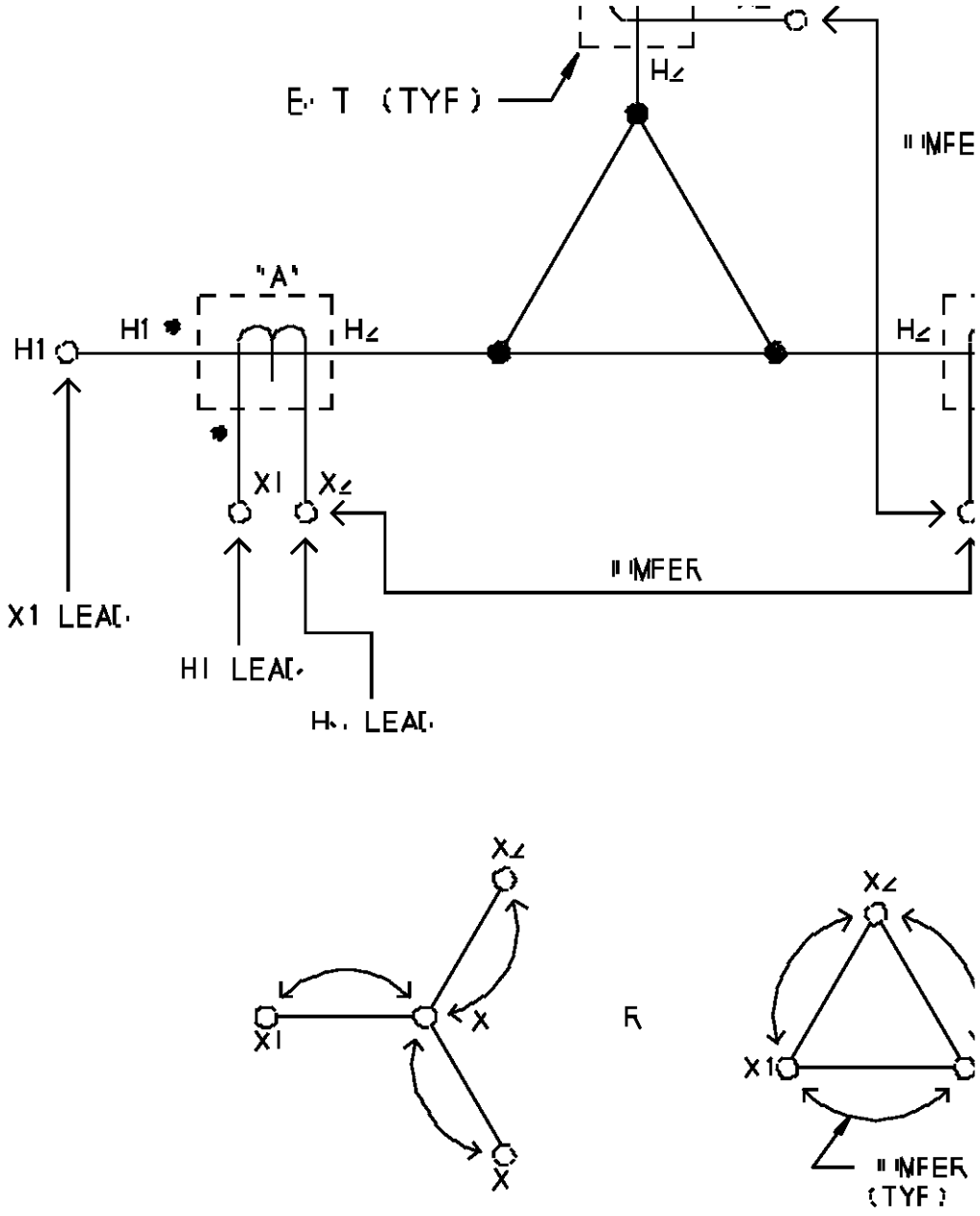

E T TE T ELE TI N

WIND IN TANDARD	TAELE N	DIA RAM N	IE
AN I	1		
EI/IE	2	4	

Figure 5-8. Setup for Testing BCT Mounted on Delta Winding on a Three-Phase Power Transformer

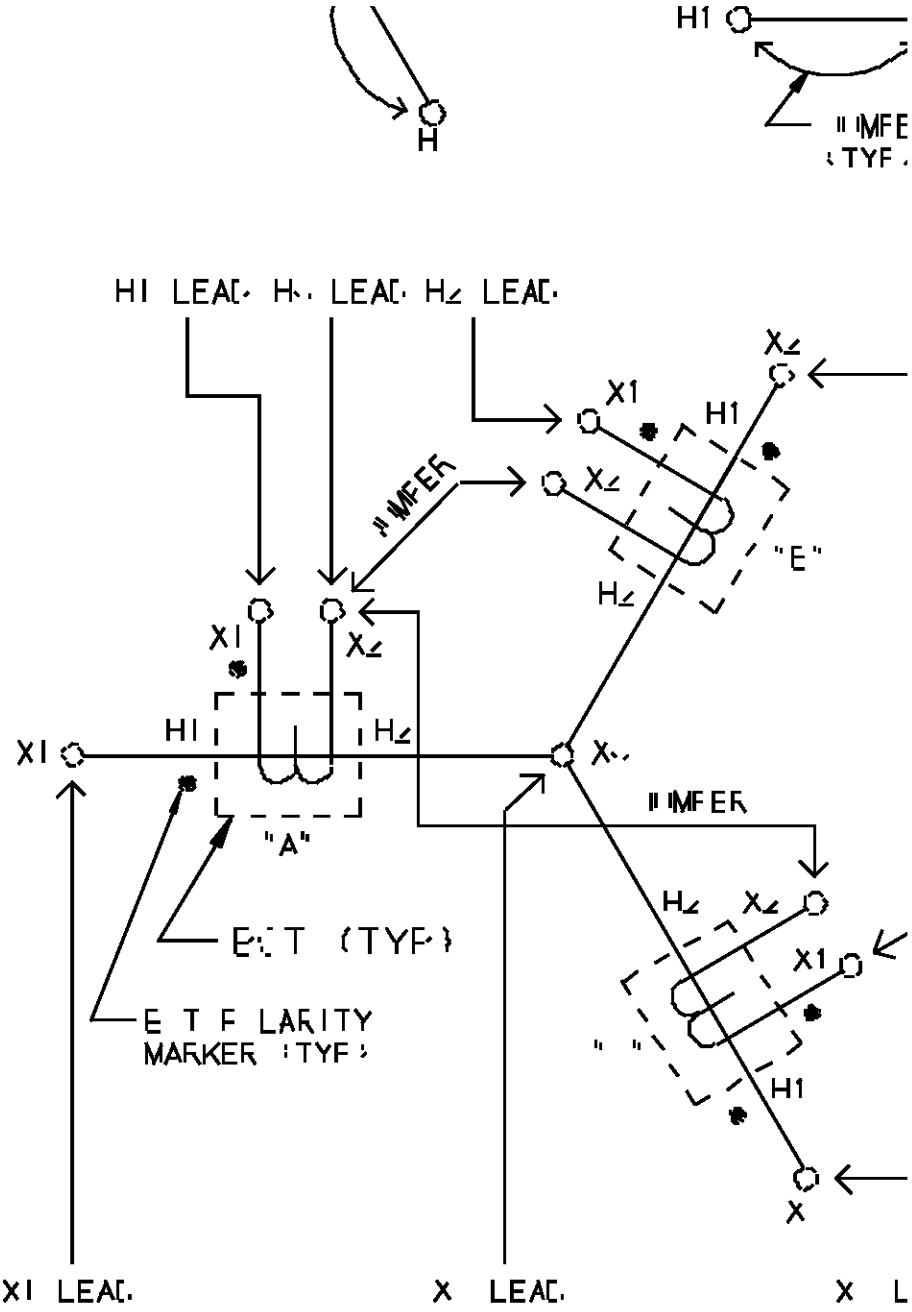

WINDING STANDARD	TABLE NO.	DIAGRAM NO.	NOTE
ANSI	1	7	
EI/IEC	2	2	

Figure 5-9. Setup for Testing BCT Mounted on Wye Winding of a Three-Phase Transformer

T-Type Transformers

T-type transformers represents the special type of thee-phase transformers. This transformer may be tested as a single phase transformer. In this case, the jumpers indicated in Table 5-3 should be applied to the appropriate terminals of the T-type transformers. The TTR measured turn ratio should be compared to the calculated turn ratio indicated in Table 5-3.

Table 5-3. T-type Transformer Winding Phase Relationship

IEC Vector Group	Winding Connection		External jumpers	Phase tested	Winding Tested		Calculated Turn Ratio	Remarks
	High-Voltage Winding (H)	Low-Voltage Winding (X)			High-Voltage Winding	Low-Voltage Winding		
							$\frac{V_H}{V_X} \bullet \frac{2}{\sqrt{3}}$	
T-T 0			- H_1 - H_2 X_1 - X_2	A B	H_1 - H_2 H_1 – H_3	X_1 - X_2 X_1 – X_3	$\frac{V_H}{V_X}$ $\frac{V_H}{V_X}$	
T-T 30 lag			H_2 – H_3 X_1 - X_2	A B	H_1 – H_3 H_2 – H_3	X_1 - X_2 X_1 – X_3	$\frac{V_H}{V_X} \bullet \frac{\sqrt{3}}{2}$	
$\frac{V_H}{V_X} \bullet \frac{2}{\sqrt{3}}$ T-T 30 lead			H_2 – H_3 X_1 – X_3	A B	H_1 – H_3 H_2 – H_3	X_1 – X_3 X_2 – X_1	$\frac{V_H}{V_X} \bullet \frac{\sqrt{3}}{2}$	

NOTE: When testing T-type transformer, the diagram number 1 should be entered at the Quick Test Setup screen (See Figure 6-3) or at the Full Test Setup 1 screen (See Figure 6-6).

Connections and Vector Voltage Diagrams

When testing three-phase transformers, it is necessary to understand the phase relationships, vector diagrams, and winding connection diagrams for these transformers. A detailed description of phase relationships, vector diagrams, and terminal markings is contained in specification ANSI C57.12.70 –1978, *American National Standard Terminal Markings and Connections for Distribution and Power Transformers*.

Refer to specification CEI/IEC 76-1:1993 and Publication 616:1978 for International Standard terminal and tapping markings for power transformers. Refer to specification AS-2374, Part 4-1982 for Australian standard tappings and connections for power transformers.

Table 5-4 shows winding diagrams for standard transformers and nonstandard transformers for power and distribution transformers marked in accordance with the ANSI standard. Table 5-5 shows winding diagrams for power transformers marked in accordance with the CEI/IEC standard, and Table 5-6 shows winding diagrams for power transformers marked in accordance with the Australian standard.

To make a measurement on a three-phase power transformer, match the vector diagram from the transformer nameplate to the corresponding winding connection diagram from Table 5-4 through 5-6, then enter the corresponding diagram number (column 1 of table) in the appropriate setup menu of the instrument.

The tables show the windings tested for each of the three phases. The tables also show the relationship between the measured turn ratio and the actual line-to-line voltage ratio. For the ANSI specification, the rated voltage on the high-voltage winding is represented by V_H; V_X represents rated voltage on the low-voltage winding.

The TTR is also capable of measuring the turn ratio on three-phase transformers with an inaccessible neutral point. In this case, the TTR automatically shorts an appropriate transformer winding, listed in the winding shorted column of the table. An inaccessible neutral point on the high-voltage or low-voltage transformer winding is designated by the symbol *.

For many utilities, different manufacturer nameplate diagrams make it impossible to always find a corresponding diagram on Tables 5-4 to 5-6. To help determine the correct connection and to test any transformer, the following explanation will help self-check your work.

Figure 5-10 (a) shows the relationship in a typical delta-wye connected transformer with accessible neutral connection point. The delta winding is the high-voltage winding and the terminals are marked H_1, H_2, and H_3. The wye winding is the low-voltage winding and the terminals are marked X_0, X_1, X_2, and X_3. Determine which windings (lines) are parallel to each other. In the diagram, winding $H_1 – H_3$ is parallel to $X_1 – X_0$ as illustrated by the two solid straight arrows. Only $H_1 – H_3$ will ratio against $X_1 – X_0$. Also $H_2 – H_1$ is parallel to $X_2 – X_0$, and $H_3 – H_2$ is parallel to $X_3 – X_0$. All ratio measurements are made between parallel windings. The phase polarity must also be observed and is designated by the order of terminal mention, i.e.,H_1 - H_3 is of the same phase polarity as $X_1 – X_0$.

Note that the phase displacement for Figure 5-10 (a) diagram is 30° and has an IEC vector group coding of Dyn1. Refer to the notes to Tables 5-4 through 5-6 for an explanation of vector group coding. For phase displacement between windings the vector relating to the HV winding is taken as the vector of origin (dotted line on delta winding, H_1 on wye winding). The vector relating to the low-voltage wye winding is taken as X_1 (dotted line on a delta winding) and is expressed in counterclockwise rotation of low-voltage winding in 30° clock-hour figure increments. The low-voltage winding lag may be from 0 to 330° in steps of 30°.

The TTR test set is capable of measuring the turn ratio of three-phase transformers where the windings are rotated or are connected in various phase displacements from standard. Figure 5-10 (b) vector diagram is an example of a typical case where the phase is displaced 150° from that of Figure 5-10 (a) diagram. Vector group coding for this diagram is Dyn5.

Figure 5-10 (c) is an example of a nameplate vector diagram drawn differently from that of Figure 5-5 (a). Although a corresponding figure cannot be found in Table 5-4, the transformer and its testing is identical to that for Figure 5-10 (a).

Figure 5-10 (d) vector diagram is an example of a typical wye-delta connected transformer winding which has a phase displacement of 210°. H_1 is the high-voltage winding vector of origin and the dotted line on the delta winding is the low-voltage winding reference. Vector group coding for this diagram is Ynd7.

(a)

(b)

(c)

(d)

Figure 5-10. Winding Connections and Phase Relationship

Notes to Table 5-4

Transformer terminal markings for distribution and power transformers marked in accordance with requirements of American National Standard Institute, Inc (ANSI) standard C57.12.70 – 1978.

Definition of Symbol Designations

H_1, H_2, H_3	External terminals on HV transformer winding.
X_1, X_2, X_3	External terminals on LV transformer winding.
H_0	External neutral terminal on HV transformer winding.
X_0	External neutral terminal on LV transformer winding.
*	Inaccessible neutral point on HV or LV transformer winding.
V_H	Nameplate voltage rating (line-to-line) of HV transformer winding.
V_X	Nameplate voltage rating (line-to-line) of LV transformer winding.
A, B, C	Winding tested on HV side of transformer.
a, b, c	Winding tested on LV side of transformer.

IEC Vector Group Coding

The letters indicate the three-phase winding connections; D, Y, and Z designate the HV side winding; d, y, and z designate the LV side winding. D and d represent a delta connection, Y and y represent a wye connection, and Z and z represent a zigzag connection. N and n indicate that the neutral point of a star or zigzag connected winding is accessible on the respective HV or LV side winding. The number indicates the phase displacement (lag) of the LV winding with respect to the HV winding in units of 30º. For example, 0 = 0º lag, 1 = 30º lag, 2 = 60º lag …, 6 = 180º lag …, 11 = 330º lag.

Additional Transformer Winding Identification

External terminal markings for three-phase power transformers with more than two windings are as follows:

Y_1, Y_2, Y_3	Third winding (if any).
Z_1, Z_2, Z_3	Fourth winding (if any).

If unable to find a corresponding diagram for a transformer with, for example, accessible neutral winding but can find the corresponding diagram for the same transformer with no neutral accessible winding, follow the test procedure for the transformer with no neutral accessible winding. In this case, specify the diagram number for the transformer with no neutral accessible winding and do not connect H0 or X0 lead to the neutral.

As an example, if transformer winding connection is identical to Table 5-4 Diagram No. 25 except the wye winding has an accessible neutral winding, perform test per diagram 25. Do not connect H0 lead to the wye winding neutral terminal. The test results are identical and do not require any corrections.

Table 5-4. ANSI Transformer Winding Phase Relationship

Copyright 1999© AVO International

Diag No.	IEC Vector Group	Winding Connection		Phase Tested	Winding Shorted By TTR	Winding Tested		Measured Turn Ratio	Remarks
		High-Voltage Winding (H)	Low-Voltage Winding (X)			High-Voltage Winding	Low-Voltage Winding		
1	1ϕ 1ph0			1ϕ	—	H_1 - H_2	X_1 - X_2	$\frac{V_H}{V_X}$	Single-phase transformer
2	1ϕ 1ph6			1ϕ	—	H_1 - H_2	X_2 - X_1	$\frac{V_H}{V_X}$	Single-phase transformer
3	Dd0			A B C	—	H_1 - H_3 H_2 - H_1 H_3 - H_2	X_1 - X_3 X_2 - X_1 X_3 - X_2	$\frac{V_H}{V_X}$	—
4	Dd6			A B C	—	H_1 - H_3 H_2 - H_1 H_3 - H_2	X_3 - X_1 X_1 - X_2 X_2 - X_3	$\frac{V_H}{V_X}$	—
5	Dyn1			A B C	—	H_1 - H_3 H_2 - H_1 H_3 - H_2	X_1 - X_0 X_2 - X_0 X_3 - X_0	$\frac{V_H \bullet \sqrt{3}}{V_X}$	Neutral accessible on wye winding
6	Dyn7			A B C	—	H_1 - H_3 H_2 - H_1 H_3 - H_2	X_0 - X_1 X_0 - X_2 X_0 - X_3	$\frac{V_H \bullet \sqrt{3}}{V_X}$	Neutral accessible on wye winding
7	YNyn0			A B C	—	H_1 - H_0 H_2 - H_0 H_3 - H_0	X_1 - X_0 X_2 - X_0 X_3 - X_0	$\frac{V_H}{V_X}$	Neutral accessible both wye windings

Table 5-4. ANSI Transformer Winding Phase Relationship

Copyright 1999© AVO International

Diag No.	IEC Vector Group	Winding Connection		Phase Tested	Winding Shorted By TTR	Winding Tested		Measured Turn Ratio	Remarks
		High-Voltage Winding (H)	Low-Voltage Winding (X)			High-Voltage Winding	Low-Voltage Winding		
8	YNyn6			A B C	—	$H_1 - H_0$ $H_2 - H_0$ $H_3 - H_0$	$X_0 - X_1$ $X_0 - X_2$ $X_0 - X_3$	$\frac{V_H}{V_X}$	Neutral accessible both wye windings
9	YNd1			A B C	—	$H_1 - H_0$ $H_2 - H_0$ $H_3 - H_0$	$X_1 - X_2$ $X_2 - X_3$ $X_3 - X_1$	$\frac{V_H}{V_X \bullet \sqrt{3}}$	Neutral accessible on wye winding
10	YNd7			A B C	—	$H_1 - H_0$ $H_2 - H_0$ $H_3 - H_0$	$X_2 - X_1$ $X_3 - X_2$ $X_1 - X_3$	$\frac{V_H}{V_X \bullet \sqrt{3}}$	Neutral accessible on wye winding
11	Dy1			A B C	$H_3 - H_2$ $H_1 - H_3$ $H_2 - H_1$	$H_1 - H_3$ $H_2 - H_1$ $H_3 - H_2$	$X_1 - *$ $X_2 - *$ $X_3 - *$	$\frac{V_H \bullet \sqrt{3}}{V_X}$	No accessible neutral on wye winding
12	Dyn5			A B C	—	$H_1 - H_3$ $H_2 - H_1$ $H_3 - H_2$	$X_3 - X_0$ $X_1 - X_0$ $X_2 - X_0$	$\frac{V_H \bullet \sqrt{3}}{V_X}$	Neutral accessible on wye winding
13	Dy5			A B C	$H_3 - H_2$ $H_1 - H_3$ $H_2 - H_1$	$H_1 - H_3$ $H_2 - H_1$ $H_3 - H_2$	$X_3 - *$ $X_1 - *$ $X_2 - *$	$\frac{V_H \bullet \sqrt{3}}{V_X}$	No accessible neutral on wye winding

Table 5-4. ANSI Transformer Winding Phase Relationship

Copyright 1999© AVO International

Diag No.	IEC Vector Group	Winding Connection		Phase Tested	Winding Shorted By TTR	Winding Tested		Measured Turn Ratio	Remarks
		High-Voltage Winding (H)	Low-Voltage Winding (X)			High-Voltage Winding	Low-Voltage Winding		
14	Dy7			A B C	H_3 - H_2 H_1 - H_3 H_2 - H_1	H_1 - H_3 H_2 - H_1 H_3 - H_2	* - X_1 * - X_2 * - X_3	$\frac{V_H \bullet \sqrt{3}}{V_X}$	No accessible neutral on wye winding
15	Dyn11			A B C	—	H_1 - H_3 H_2 - H_1 H_3 - H_2	X_0 - X_3 X_0 - X_1 X_0 - X_2	$\frac{V_H \bullet \sqrt{3}}{V_X}$	Neutral accessible on wye winding
16	Dy11			A B C	H_3 - H_2 H_1 - H_3 H_2 - H_1	H_1 - H_3 H_2 – H_1 H_3 - H_2	* - X_3 * - X_1 * - X_2	$\frac{V_H \bullet \sqrt{3}}{V_X}$	No accessible neutral on wye winding
17	Dz0			A B C	—	H_1 - H_3 H_2 - H_1 H_3 - H_2	X_1 - X_3 X_2 - X_1 X_3 - X_2	$\frac{V_H}{V_X}$	No accessible neutral
18	Dz6			A B C	—	H_1 - H_3 H_2 - H_1 H_3 - H_2	X_3 - X_1 X_1 - X_2 X_2 - X_3	$\frac{V_H}{V_X}$	No accessible neutral
19	YNy0			A B C	H_2- H_0 H_3 - H_0 H_1 - H_0	H_1 - H_0 H_2 - H_0 H_3 - H_0	X_1 - * X_2 - * X_3 - *	$\frac{V_H}{V_X}$	No accessible neutral on low-voltage winding

Table 5-4. ANSI Transformer Winding Phase Relationship

Copyright 1999© AVO International

Diag No.	IEC Vector Group	Winding Connection		Phase Tested	Winding Shorted By TTR	Winding Tested		Measured Turn Ratio	Remarks
		High-Voltage Winding (H)	Low-Voltage Winding (X)			High-Voltage Winding	Low-Voltage Winding		
20	Yyn0			A B C	$X_3 - X_0$ $X_1 - X_0$ $X_2 - X_0$	$H_1 - *$ $H_2 - *$ $H_3 - *$	$X_1 - X_0$ $X_2 - X_0$ $X_3 - X_0$	$\frac{V_H}{V_X}$	No accessible neutral on high-voltage winding
21	Yy0			A B C	—	$H_1 - H_3$ $H_2 - H_1$ $H_3 - H_2$	$X_1 - X_3$ $X_2 - X_1$ $X_3 - X_2$	$\frac{V_H}{V_X}$	No accessible neutral both wye windings
22	YNy6			A B C	$H_2 - H_0$ $H_3 - H_0$ $H_1 - H_0$	$H_1 - H_0$ $H_2 - H_0$ $H_3 - H_0$	$* - X_1$ $* - X_2$ $* - X_3$	$\frac{V_H}{V_X}$	No accessible neutral on low-voltage winding
23	Yyn6			A B C	$X_3 - X_0$ $X_1 - X_0$ $X_2 - X_0$	$H_1 - *$ $H_2 - *$ $H_3 - *$	$X_0 - X_1$ $X_0 - X_2$ $X_0 - X_3$	$\frac{V_H}{V_X}$	No accessible neutral on high-voltage winding
24	Yy6			A B C	—	$H_1 - H_3$ $H_2 - H_1$ $H_3 - H_2$	$X_3 - X_1$ $X_1 - X_2$ $X_2 - X_3$	$\frac{V_H}{V_X}$	No accessible neutral on both wye windings
25	Yzn1			A B C	—	$H_1 - H_3$ $H_2 - H_1$ $H_3 - H_2$	$X_1 - X_0$ $X_2 - X_0$ $X_3 - X_0$	$\frac{V_H \bullet \sqrt{3}}{V_X}$	No accessible neutral on wye winding

Table 5-4. ANSI Transformer Winding Phase Relationship

Copyright 1999© AVO International

Diag No.	IEC Vector Group	Winding Connection		Phase Tested	Winding Shorted By TTR	Winding Tested		Measured Turn Ratio	Remarks
		High-Voltage Winding (H)	Low-Voltage Winding (X)			High-Voltage Winding	Low-Voltage Winding		
26	Yz1			A B C	$H_3 - H_2$ $H_1 - H_3$ $H_2 - H_1$	$H_1-(H_3+H_2)$ $H_2 (H_1+H_3)$ $H_3-(H_2+H_1)$	$X_1 - X_2$ $X_2 - X_3$ $X_3 - X_1$	$\frac{V_H}{V_X} \bullet \frac{\sqrt{3}}{2}$	No accessible neutral
27	Yzn5			A B C	—	$H_1 - H_3$ $H_2 - H_1$ $H_3 - H_2$	$X_3 - X_0$ $X_1 - X_0$ $X_2 - X_0$	$\frac{V_H \bullet \sqrt{3}}{V_X}$	No accessible neutral on wye winding
28	Yz5			A B C	$H_3 - H_2$ $H_1 - H_3$ $H_2 - H_1$	$H_1-(H_3+H_2)$ $H_2-(H_1+H_3)$ $H_3-(H_2+H_1)$	$X_3 - X_1$ $X_1 - X_2$ $X_2 - X_3$	$\frac{V_H}{V_X} \bullet \frac{\sqrt{3}}{2}$	No accessible neutral
29	Yzn7			A B C	—	$H_1 - H_3$ $H_2 - H_1$ $H_3 - H_2$	$X_0 - X_1$ $X_0 - X_2$ $X_0 - X_3$	$\frac{V_H \bullet \sqrt{3}}{V_X}$	No accessible neutral on wye winding
30	Yz7			A B C	$H_3 - H_2$ $H_1 - H_3$ $H_2 - H_1$	$H_1-(H_3+H_2)$ $H_2-(H_1+H_3)$ $H_3-(H_2+H_1)$	$X_2 - X_1$ $X_3 - X_2$ $X_1 - X_3$	$\frac{V_H}{V_X} \bullet \frac{\sqrt{3}}{2}$	No accessible neutral

Table 5-4. ANSI Transformer Winding Phase Relationship

Copyright 1999© AVO International

Diag No.	IEC Vector Group	Winding Connection		Phase Tested	Winding Shorted By TTR	Winding Tested		Measured Turn Ratio	Remarks
		High-Voltage Winding (H)	Low-Voltage Winding (X)			High-Voltage Winding	Low-Voltage Winding		
31	Yzn11			A B C	—	$H_1 - H_3$ $H_2 - H_1$ $H_3 - H_2$	$X_0 - X_3$ $X_0 - X_1$ $X_0 - X_2$	$\frac{V_H \bullet \sqrt{3}}{V_X}$	No accessible neutral on wye winding
32	Yz11			A B C	$H_3 - H_2$ $H_1 - H_3$ $H_2 - H_1$	$H_1-(H_3+H_2)$ $H_2-(H_1+H_3)$ $H_3-(H_2+H_1)$	$X_1 - X_3$ $X_2 - X_1$ $X_3 - X_2$	$\frac{V_H}{V_X} \bullet \frac{\sqrt{3}}{2}$	No accessible neutral
33	ZNy5			A B C	—	$H_1 - H_0$ $H_2 - H_0$ $H_3 - H_0$	$X_3 - X_1$ $X_1 - X_2$ $X_2 - X_3$	$\frac{V_H}{V_X \bullet \sqrt{3}}$	No accessible neutral on wye winding
34	Zy5			A B C	$H_3 - H_2$ $H_1 - H_3$ $H_2 - H_1$	$H_1-(H_3+H_2)$ $H_2-(H_1+H_3)$ $H_3-(H_2+H_1)$	$X_3 - X_1$ $X_1 - X_2$ $X_2 - X_3$	$\frac{V_H}{V_X} \bullet \frac{\sqrt{3}}{2}$	No accessible neutral
35	ZNy11			A B C	—	$H_1 - H_0$ $H_2 - H_0$ $H_3 - H_0$	$X_1 - X_3$ $X_2 - X_1$ $X_3 - X_2$	$\frac{V_H}{V_X \bullet \sqrt{3}}$	No accessible neutral on wye winding
36	Zy11			A B C	$H_3 - H_2$ $H_1 - H_3$ $H_2 - H_1$	$H_1-(H_3+H_2)$ $H_2-(H_1+H_3)$ $H_3-(H_2+H_1)$	$X_1 - X_3$ $X_2 - X_1$ $X_3 - X_2$	$\frac{V_H}{V_X} \bullet \frac{\sqrt{3}}{2}$	No accessible neutral

Table 5-4. ANSI Transformer Winding Phase Relationship									
Copyright 1999© AVO International									
		Winding Connection				Winding Tested			
Diag No.	IEC Vector Group	High-Voltage Winding (H)	Low-Voltage Winding (X)	Phase Tested	Winding Shorted By TTR	High-Voltage Winding	Low-Voltage Winding	Measured Turn Ratio	Remarks
37	Yd1			A B C	H_3 - H_2 H_1 - H_3 H_2 - H_1	H_1-(H_3+H_2) H_2-(H_1+H_3) H_3-(H_2+H_1)	X_1 - X_2 X_2 - X_3 X_3 - X_1	$\frac{V_H}{V_X} \bullet \frac{\sqrt{3}}{2}$	No accessible neutral on wye winding
38	YNd5			A B C	—	H_1 - H_0 H_2 - H_0 H_3 - H_0	X_3 - X_1 X_1 - X_2 X_2 - X_3	$\frac{V_H}{V_X \bullet \sqrt{3}}$	Neutral accessible on wye winding
39	Yd5			A B C	H_3 - H_2 H_1 - H_3 H_2 - H_1	H_1-(H_3+H_2) H_2-(H_1+H_3) H_3-(H_2+H_1)	X_3 - X_1 X_1 - X_2 X_2 - X_3	$\frac{V_H}{V_X} \bullet \frac{\sqrt{3}}{2}$	No accessible neutral on wye winding
40	Yd7			A B C	H_3 - H_2 H_1 - H_3 H_2 - H_1	H_1-(H_3+H_2) H_2-(H_1+H_3) H_3-(H_2+H_1)	X_2 - X_1 X_3 - X_2 X_1 - X_3	$\frac{V_H}{V_X} \bullet \frac{\sqrt{3}}{2}$	No accessible neutral on wye winding
41	YNd11			A B C	—	H_1 - H_0 H_2 - H_0 H_3 - H_0	X_1 - X_3 X_2 – X_1 X_3 – X_2	$\frac{V_H}{V_X \bullet \sqrt{3}}$	Neutral accessible on wye winding

Table 5-4. ANSI Transformer Winding Phase Relationship

Copyright 1999© AVO International

Diag No.	IEC Vector Group	Winding Connection		Phase Tested	Winding Shorted By TTR	Winding Tested		Measured Turn Ratio	Remarks
		High-Voltage Winding (H)	Low-Voltage Winding (X)			High-Voltage Winding	Low-Voltage Winding		
42	Yd11			A B C	$H_3 - H_2$ $H_1 - H_3$ $H_2 - H_1$	$H_1-(H_3+H_2)$ $H_2-(H_1+H_3)$ $H_3-(H_2+H_1)$	$X_1 - X_3$ $X_2 - X_1$ $X_3 - X_2$	$\frac{V_H}{V_X} \bullet \frac{\sqrt{3}}{2}$	No accessible neutral on wye winding

Notes to Table 5-5

Transformer terminal markings for power transformers marked in accordance with requirements of International Standard CEI/IEC 76-1:1993.

Definition of Symbol Designations

1U, 1V, 1W	External terminals on HV transformer winding (alternate notation U, V, W).
2U, 2V, 2W	External terminals on LV transformer winding (alternate notation u, v, w).
1N	External neutral terminal on HV transformer winding (alternate notation N).
2N	External neutral terminal on LV transformer winding (alternate notation n).
*	Inaccessible neutral point on HV or LV transformer winding.
U1	Nameplate voltage rating (line-to-line) of HV transformer winding.
U2	Nameplate voltage rating (line-to-line) of LV transformer winding.
U, V, W	Phase tested.

IEC Vector Group Coding

The letters indicate the three-phase winding connections; D, Y, and Z designate the HV side winding; d, y, and z designate the LV side winding. D and d represent a delta connection, Y and y represent a wye connection, and Z and z represent a zigzag connection. N and n indicate that the neutral point of a star or zigzag connected winding is accessible on the respective HV or LV side winding. The number indicates the phase displacement (lag) of the LV winding with respect to the HV winding in units of 30º.
For example, 0 = 0º lag, 1 = 30º lag, 2 = 60º lag …, 6 = 180º lag …, 11 = 330º lag.

Additional Transformer Winding Identification

External terminal markings for three-phase power transformers with more than two windings are as follows:

3U, 3V, 3W	Third winding (if any).
4U, 4V, 4W	Fourth winding (if any).

If unable to find a corresponding diagram for a transformer with, for example, accessible neutral winding but can find the corresponding diagram for the same transformer with no neutral accessible winding, follow the test procedure for the transformer with no neutral accessible winding. In this case, specify the diagram number for the transformer with no neutral accessible winding and do not connect 1N or 2N lead to the neutral.

As an example, if transformer winding connection is identical to Table 5-5 Diagram No. 43 except the wye winding has an accessible neutral winding, perform test per diagram 43. Do not connect 1N lead to the wye winding neutral terminal. The test results are identical and do not require any corrections.

Table 5-5. CEI/IEC 76-1:1993 Transformer Winding Phase Relationship

Copyright 1999© AVO International

Diag No.	IEC Vector Group	Winding Connection		Phase Tested	Winding Shorted By TTR	Winding Tested		Measured Turn Ratio	Remarks
		High-Voltage Winding (U1)	Low-Voltage Winding (U2)			High-Voltage Winding	Low-Voltage Winding		
1	1ϕ 1ph0			1ϕ	—	1.1-1.2	2.1-2.2	$\frac{U1}{U2}$	Single-phase transformer
2	1ϕ 1ph6			1ϕ	—	1.1-1.2	2.2-2.1	$\frac{U1}{U2}$	Single-phase transformer
3	Dd0			U V W	— — —	1U-1V 1V-1W 1W-1U	2U-2V 2V-2W 2W-2U	$\frac{U1}{U2}$	—
4	Dd2			U V W	— — —	1U-1V 1V-1W 1W-1U	2W-2V 2U-2W 2V-2U	$\frac{U1}{U2}$	—
5	Dd4			U V W	— — —	1U-1V 1V-1W 1W-1U	2W-2U 2U-2V 2V-2W	$\frac{U1}{U2}$	—
6	Dd6			U V W	— — —	1U-1V 1V-1W 1W-1U	2V-2U 2W-2V 2U-2W	$\frac{U1}{U2}$	—
7	Dd8			U V W	— — —	1U-1V 1V-1W 1W-1U	2V-2W 2W-2U 2U-2V	$\frac{U1}{U2}$	—
8	Dd10			U V W	— — —	1U-1V 1V-1W 1W-1U	2U-2W 2V-2U 2W-2V	$\frac{U1}{U2}$	—

Table 5-5. CEI/IEC 76-1:1993 Transformer Winding Phase Relationship

Copyright 1999© AVO International

Diag No.	IEC Vector Group	Winding Connection		Phase Tested	Winding Shorted By TTR	Winding Tested		Measured Turn Ratio	Remarks
		High-Voltage Winding (U1)	Low-Voltage Winding (U2)			High-Voltage Winding	Low-Voltage Winding		
9	Dyn1			U V W	— — —	1U-1W 1V-1U 1W-1V	2U-2N 2V-2N 2W-2N	$\frac{U1 \bullet \sqrt{3}}{U2}$	Neutral accessible on wye winding
10	Dy1			U V W	1V-1W 1W-1U 1U-1V	1U-1W 1V-1U 1W-1V	2U-* 2V-* 2W-*	$\frac{U1 \bullet \sqrt{3}}{U2}$	No neutral accessible on wye winding
11	Dyn5			U V W	— — —	1V-1U 1W-1V 1U-1W	2U-2N 2V-2N 2W-2N	$\frac{U1 \bullet \sqrt{3}}{U2}$	Neutral accessible on wye winding
12	Dy5			U V W	1V-1W 1W-1U 1U-1V	1V-1U 1W-1V 1U-1W	2U-* 2V-* 2W-*	$\frac{U1 \bullet \sqrt{3}}{U2}$	No neutral accessible on wye winding
13	Dyn7			U V W	— — —	1W-1U 1U-1V 1V-1W	2U-2N 2V-2N 2W-2N	$\frac{U1 \bullet \sqrt{3}}{U2}$	Neutral accessible on wye winding
14	Dy7			U V W	1V-1W 1W-1U 1U-1V	1W-1U 1U-1V 1V-1W	2U-* 2V-* 2W-*	$\frac{U1 \bullet \sqrt{3}}{U2}$	No neutral accessible on wye winding

Table 5-5. CEI/IEC 76-1:1993 Transformer Winding Phase Relationship

Copyright 1999© AVO International

Diag No.	IEC Vector Group	Winding Connection		Phase Tested	Winding Shorted By TTR	Winding Tested		Measured Turn Ratio	Remarks
		High-Voltage Winding (U1)	Low-Voltage Winding (U2)			High-Voltage Winding	Low-Voltage Winding		
15	Dyn11			U V W	— — —	1U-1V 1V-1W 1W-1U	2U-2N 2V-2N 2W-2N	$\frac{U1 \bullet \sqrt{3}}{U2}$	Neutral accessible on wye winding
16	Dy11			U V W	1V-1W 1W-1U 1U-1V	1U-1V 1V-1W 1W-1U	2U-* 2V-* 2W-*	$\frac{U1 \bullet \sqrt{3}}{U2}$	No neutral accessible on wye winding
17	Dzn0			U V W	1V-1W 1W-1U 1U-1V	1U-(1V+1W) 1V-(1W+1U) 1W-(1U+1V)	2U-2N 2V-2N 2W-2N	$\frac{1.5U1}{U2}$	Neutral accessible on zigzag winding
18	Dz0			U V W	— — —	1U-1V 1V-1W 1W-1U	2U-2V 2V-2W 2W-2U	$\frac{U1}{U2}$	No neutral accessible on zigzag winding
19	Dzn2			U V W	1V-1W 1W-1U 1U-1V	1U-(1V+1W) 1V-(1W+1U) 1W-(1U+1V)	2N-2V 2N-2W 2N-2U	$\frac{1.5U1}{U2}$	Neutral accessible on zigzag winding
20	Dz2			U V W	— — —	1U-1V 1V-1W 1W-1U	2W-2V 2U-2W 2V-2U	$\frac{U1}{U2}$	No neutral accessible on zigzag winding

Table 5-5. CEI/IEC 76-1:1993 Transformer Winding Phase Relationship

Copyright 1999© AVO International

Diag No.	IEC Vector Group	Winding Connection		Phase Tested	Winding Shorted By TTR	Winding Tested		Measured Turn Ratio	Remarks
		High-Voltage Winding (U1)	Low-Voltage Winding (U2)			High-Voltage Winding	Low-Voltage Winding		
21	Dzn4			U V W	1V-1W 1W-1U 1U-1V	1U-(1V+1W) 1V-(1W+1U) 1W-(1U+1V)	2W-2N 2U-2N 2V-2N	$\frac{1.5U1}{U2}$	Neutral accessible on zigzag winding
22	Dz4			U V W	— — —	1U-1V 1V-1W 1W-1U	2W-2U 2U-2V 2V-2W	$\frac{U1}{U2}$	No neutral accessible on zigzag winding
23	Dzn6			U V W	1V-1W 1W-1U 1U-1V	1U-(1V+1W) 1V-(1W+1U) 1W-(1U+1V)	2N-2U 2N-2V 2N-2W	$\frac{1.5U1}{U2}$	Neutral accessible on zigzag winding
24	Dz6			U V W	— — —	1U-1V 1V-1W 1W-1U	2V-2U 2W-2V 2U-2W	$\frac{U1}{U2}$	No neutral accessible on zigzag winding
25	Dzn8			U V W	1V-1W 1W-1U 1U-1V	1U-(1V+1W) 1V-(1W+1U) 1W-(1U+1V)	2V-2N 2W-2N 2U-2N	$\frac{1.5U1}{U2}$	Neutral accessible on zigzag winding
26	Dz8			U V W	— — —	1U-1V 1V-1W 1W-1U	2V-2W 2W-2U 2U-2V	$\frac{U1}{U2}$	No neutral accessible on zigzag winding

Table 5-5. CEI/IEC 76-1:1993 Transformer Winding Phase Relationship

Copyright 1999© AVO International

Diag No.	IEC Vector Group	Winding Connection		Phase Tested	Winding Shorted By TTR	Winding Tested		Measured Turn Ratio	Remarks
		High-Voltage Winding (U1)	Low-Voltage Winding (U2)			High-Voltage Winding	Low-Voltage Winding		
27	Dzn10			U V W	1V-1W 1W-1U 1U-1V	1U-(1V+1W) 1V-(1W+1U) 1W-(1U+1V)	2N-2W 2N-2U 2N-2V	$\frac{1.5U1}{U2}$	Neutral accessible on zigzag winding
28	Dz10			U V W	— — —	1U-1V 1V-1W 1W-1U	2U-2W 2V-2U 2W-2V	$\frac{U1}{U2}$	No neutral accessible on zigzag winding
29	YNyn0			U V W	— — —	1U-1N 1V-1N 1W-1N	2U-2N 2V-2N 2W-2N	$\frac{U1}{U2}$	Neutral accessible on HV & LV winding
30	YNy0			U V W	1V-1N 1W-1N 1U-1N	1U-1N 1V-1N 1W-1N	2U-* 2V-* 2W-*	$\frac{U1}{U2}$	No neutral accessible on LV winding
31	Yyn0			U V W	2V-2N 2W-2N 2U-2N	1U-* 1V-* 1W-*	2U-2N 2V-2N 2W-2N	$\frac{U1}{U2}$	No neutral accessible on HV winding
32	Yy0			U V W	— — —	1U-1V 1V-1W 1W-1U	2U-2V 2V-2W 2W-2U	$\frac{U1}{U2}$	No neutral accessible on HV & LV windings

Table 5-5. CEI/IEC 76-1:1993 Transformer Winding Phase Relationship

Copyright 1999© AVO International

Diag No.	IEC Vector Group	Winding Connection		Phase Tested	Winding Shorted By TTR	Winding Tested		Measured Turn Ratio	Remarks
		High-Voltage Winding (U1)	Low-Voltage Winding (U2)			High-Voltage Winding	Low-Voltage Winding		
33	YNyn6			U V W	— — —	1U-1N 1V-1N 1W-1N	2N-2U 2N-2V 2N-2W	$\frac{U1}{U2}$	Neutral accessible on HV & LV windings
34	YNy6			U V W	1V-1N 1W-1N 1U-1N	1U-1N 1V-1N 1W-1N	*-2U *-2V *-2W	$\frac{U1}{U2}$	No neutral accessible on LV winding
35	Yyn6			U V W	2V-2N 2W-2N 2U-2N	1U-* 1V-* 1W-*	2N-2U 2N-2V 2N-2W	$\frac{U1}{U2}$	No neutral accessible on HV winding
36	Yy6			U V W	— — —	1U-1V 1V-1W 1W-1U	2V-2U 2W-2V 2U-2W	$\frac{U1}{U2}$	No neutral accessible on HV & LV windings
37	Yzn1			U V W	— — —	1U-1W 1V-1U 1W-1V	2U-2N 2V-2N 2W-2N	$\frac{U1 \bullet \sqrt{3}}{U2}$	With or without accessible neutral on wye winding

Table 5-5. CEI/IEC 76-1:1993 Transformer Winding Phase Relationship

Copyright 1999© AVO International

Diag No.	IEC Vector Group	Winding Connection		Phase Tested	Winding Shorted By TTR	Winding Tested		Measured Turn Ratio	Remarks
		High-Voltage Winding (U1)	Low-Voltage Winding (U2)			High-Voltage Winding	Low-Voltage Winding		
38	Yz1			U V W	1V-1W 1W-1U 1U-1V	1U-(1V+1W) 1V-(1W+1U) 1W-(1U+1V)	2U-2V 2V-2W 2W-2U	$\frac{U1}{U2} \bullet \frac{\sqrt{3}}{2}$	No neutral accessible on HV & LV winding
39	Yzn5			U V W	— — —	1U-1V 1V-1W 1W-1U	2N-2U 2N-2V 2N-2W	$\frac{U1 \bullet \sqrt{3}}{U2}$	With or without accessible neutral on wye winding
40	Yz5			U V W	1V-1W 1W-1U 1U-1V	1U-(1V+1W) 1V-(1W+1U) 1W-(1U+1V)	2W-2U 2U-2V 2V-2W	$\frac{U1}{U2} \bullet \frac{\sqrt{3}}{2}$	No neutral accessible on HV & LV windings
41	Yzn7			U V W	— — —	1U-1V 1V-1W 1W-1U	2V-2N 2W-2N 2U-2N	$\frac{U1 \bullet \sqrt{3}}{U2}$	Neutral accessible on wye winding
42	Yz7			U V W	1V-1W 1W-1U 1U-1V	1U-(1V+1W) 1V-(1W+1U) 1W-(1U+1V)	2V-2U 2W-2V 2U-2W	$\frac{U1}{U2} \bullet \frac{\sqrt{3}}{2}$	No neutral accessible on HV & LV windings

Table 5-5. CEI/IEC 76-1:1993 Transformer Winding Phase Relationship

Copyright 1999© AVO International

Diag No.	IEC Vector Group	Winding Connection		Phase Tested	Winding Shorted By TTR	Winding Tested		Measured Turn Ratio	Remarks
		High-Voltage Winding (U1)	Low-Voltage Winding (U2)			High-Voltage Winding	Low-Voltage Winding		
43	Yzn11			U V W	— — —	1U-1V 1V-1W 1W-1U	2U-2N 2V-2N 2W-2N	$\frac{U1 \bullet \sqrt{3}}{U2}$	With or without accessible neutral on wye winding
44	Yz11			U V W	1V-1W 1W-1U 1U-1V	1U-(1V+1W) 1V-(1W+1U) 1W-(1U+1V)	2U-2W 2V-2U 2W-2V	$\frac{U1}{U2} \bullet \frac{\sqrt{3}}{2}$	No neutral accessible on HV & LV windings
45	YNd1			U V W	— — —	1U-1N 1V-1N 1W-1N	2U-2V 2V-2W 2W-2U	$\frac{U1 \bullet \sqrt{3}}{U2}$	Neutral accessible on wye winding
46	Yd1			U V W	1V-1W 1W-1U 1U-1V	1U-(1V+1W) 1V-(1W+1U) 1W-(1U+1V)	2U-2V 2V-2W 2W-2U	$\frac{U1}{U2} \bullet \frac{\sqrt{3}}{2}$	No neutral accessible on wye winding
47	YNd5			U V W	— — —	1U-1N 1V-1N 1W-1N	2W-2U 2U-2V 2V-2W	$\frac{U1 \bullet \sqrt{3}}{U2}$	Neutral accessible on wye winding

Table 5-5. CEI/IEC 76-1:1993 Transformer Winding Phase Relationship

Copyright 1999© AVO International

Diag No.	IEC Vector Group	Winding Connection		Phase Tested	Winding Shorted By TTR	Winding Tested		Measured Turn Ratio	Remarks
		High-Voltage Winding (U1)	Low-Voltage Winding (U2)			High-Voltage Winding	Low-Voltage Winding		
48	Yd5			U V W	1V-1W 1W-1U 1U-1V	1U-(1V+1W) 1V-(1W+1U) 1W-(1U+1V)	2W-2U 2U-2V 2V-2W	$\frac{U1}{U2} \bullet \frac{\sqrt{3}}{2}$	No neutral accessible on wye winding
49	YNd7			U V W	— — —	1U-1N 1V-1N 1W-1N	2V-2U 2W-2V 2U-2W	$\frac{U1 \bullet \sqrt{3}}{U2}$	Neutral accessible on wye winding
50	Yd7			U V W	1V-1W 1W-1U 1U-1V	1U-(1V+1W) 1V-(1W+1U) 1W-(1U+1V)	2V-2U 2W-2V 2U-2W	$\frac{U1}{U2} \bullet \frac{\sqrt{3}}{2}$	No neutral accessible on wye winding
51	YNd11			U V W	— — —	1U-1N 1V-1N 1W-1N	2U-2W 2V-2U 2W-2V	$\frac{U1 \bullet \sqrt{3}}{U2}$	Neutral accessible on wye winding
52	Yd11			U V W	1V-1W 1W-1U 1U-1V	1U-(1V+1W) 1V-(1W+1U) 1W-(1U+1V)	2U-2W 2V-2U 2W-2V	$\frac{U1}{U2} \bullet \frac{\sqrt{3}}{2}$	No neutral accessible on wye winding

Notes to Table 5-6

Transformer terminal markings for power transformers marked in accordance with requirements of Australian Standard 2374, Part 4-1982.

Definition of Symbol Designations

A_2, B_2, C_2	External terminals on HV transformer winding (A_x, B_x, C_x).
a_2, b_2, c_2	External terminals on LV transformer winding (a_x, b_x, c_x).
N	External neutral terminal on HV transformer winding.
n	External neutral terminal on LV transformer winding.
*	Inaccessible neutral point on HV or LV transformer winding.
HV	Nameplate voltage rating (line-to-line) of HV transformer winding.
LV	Nameplate voltage rating (line-to-line) of LV transformer winding.
A, B, C	Winding tested on HV side of transformer.
a, b, c	Winding tested on LV side of transformer.

IEC Vector Group Coding

The letters indicate the three-phase winding connections; D, Y, and Z designate the HV side winding; d, y, and z designate the LV side winding. D and d represent a delta connection, Y and y represent a wye connection, and Z and z represent a zigzag connection. N and n indicate that the neutral point of a star or zigzag connected winding is accessible on the respective HV or LV side winding. The number indicates the phase displacement (lag) of the LV winding with respect to the HV winding in units of 30º.
For example, 0 = 0º lag, 1 = 30º lag, 2 = 60º lag …, 6 = 180º lag …, 11 = 330º lag.

Additional Transformer Winding Identification

External terminal markings for three-phase power transformers with more than two windings are as follows:

3A, 3B, 3C	Third winding (if any).
4A, 4B, 4C	Fourth winding (if any).

If unable to find a corresponding diagram for a transformer with, for example, accessible neutral winding but can find the corresponding diagram for the same transformer with no neutral accessible winding, follow the test procedure for the transformer with no neutral accessible winding. In this case, specify the diagram number for the transformer with no neutral accessible winding and do not connect N or n lead to the neutral.

As an example, if transformer winding connection is identical to Table 5-6 Diagram No. 23 except the wye winding has an accessible neutral winding, perform test per diagram 23. Do not connect N lead to the wye winding neutral terminal. The test results are identical and do not require any corrections.

Table 5-6. Transformer Winding Phase Relationship (Australian Std. 2374, Part 4 - 1982)

Copyright 1999© AVO International

Diag No.	IEC Vector Group	Winding Connection		Phase Tested	Winding Shorted By TTR	Winding Tested		Measured Turn Ratio	Remarks
		High-Voltage Winding (HV)	Low-Voltage Winding (LV)			High-Voltage Winding	Low-Voltage Winding		
1	1ϕ 1ph0			1ϕ	—	A_2 - A_1	a_2 - a_1	$\frac{HV}{LV}$	Single-phase transformer
2	1ϕ 1ph6			1ϕ	—	A_2 - A_1	a_1 - a_2	$\frac{HV}{LV}$	Single-phase transformer
3	Dd0			A B C	— — —	A_2 - B_2 B_2 - C_2 C_2 - A_2	a_2 - b_2 b_2 - c_2 c_2 - a_2	$\frac{HV}{LV}$	—
4	Dd6			A B C	— — —	A_2 - B_2 B_2 - C_2 C_2 - A_2	b_1 - a_1 c_1 - b_1 a_1 - c_1	$\frac{HV}{LV}$	—
5	Dyn1			A B C	— — —	A_2 - C_2 B_2 - A_2 C_2 - B_2	a_2 - n b_2 - n c_2 - n	$\frac{HV \bullet \sqrt{3}}{LV}$	Neutral accessible on wye winding
6	Dy1			A B C	B_2 - C_2 C_2 - A_2 A_2 - B_2	A_2 - C_2 B_2 - A_2 C_2 - B_2	a_2 -* b_2 - * c_2 - *	$\frac{HV \bullet \sqrt{3}}{LV}$	No neutral accessible on wye winding
7	Dyn11			A B C	— — —	A_2 - B_2 B_2 - C_2 C_2 - A_2	a_2 - n b_2 - n c_2 - n	$\frac{HV \bullet \sqrt{3}}{LV}$	Neutral accessible on wye winding

Table 5-6. Transformer Winding Phase Relationship (Australian Std. 2374, Part 4 - 1982)

Copyright 1999© AVO International

Diag No.	IEC Vector Group	Winding Connection		Phase Tested	Winding Shorted By TTR	Winding Tested		Measured Turn Ratio	Remarks
		High-Voltage Winding (HV)	Low-Voltage Winding (LV)			High-Voltage Winding	Low-Voltage Winding		
8	Dy11			A B C	B_2 - C_2 C_2 - A_2 A_2 - B_2	A_2 - B_2 B_2 - C_2 C_2 - A_2	a_2 - * b_2 - * c_2 - *	$\frac{HV \bullet \sqrt{3}}{LV}$	No neutral accessible on wye winding
9	Dzn0			A B C	B_2 - C_2 C_2 - A_2 A_2 - B_2	A_2 - (B_2+C_2) B_2 - (C_2+A_2) C_2 - (A_2+B_2)	a_4 - n b_4 - n c_4 - n	$\frac{1.5\ HV}{LV}$	Neutral accessible on zigzag winding
10	Dz0			A B C	— — —	A_2 - B_2 B_2 - C_2 C_2 - A_2	a_4 - b_4 b_4 - c_4 c_4 - a_4	$\frac{HV}{LV}$	No neutral accessible on zigzag winding
11	Dzn6			A B C	B_2 - C_2 C_2 - A_2 A_2 - B_2	A_2 - (B_2+C_2) B_2 - (C_2+A_2) C_2 - (A_2+B_2)	n - a_3 n - b_3 n - c_3	$\frac{1.5\ HV}{LV}$	Neutral accessible on zigzag winding
12	Dz6			A B C	— — —	A_2 - B_2 B_2 - C_2 C_2 - A_2	b_3 - a_3 c_3 - b_3 a_3 - c_3	$\frac{HV}{LV}$	No neutral accessible on zigzag winding
13	YNyn0			A B C	— — —	A_2 - N B_2 - N C_2 - N	a_2 - n b_2 - n c_2 - n	$\frac{HV}{LV}$	Neutral accessible on HV & LV windings

Table 5-6. Transformer Winding Phase Relationship (Australian Std. 2374, Part 4 - 1982)

Copyright 1999© AVO International

Diag No.	IEC Vector Group	Winding Connection		Phase Tested	Winding Shorted By TTR	Winding Tested		Measured Turn Ratio	Remarks
		High-Voltage Winding (HV)	Low-Voltage Winding (LV)			High-Voltage Winding	Low-Voltage Winding		
14	YNy0			A B C	B_2 - N C_2 - N A_2 - N	A_2 - N B_2 - N C_2 - N	a_2 - * b_2 - * c_2 - *	$\frac{HV}{LV}$	No accessible neutral on LV winding
15	Yyn0			A B C	b_2 - n c_2 - n a_2 - n	A_2 - * B_2 - * C_2 - *	a_2 - n b_2 - n c_2 - n	$\frac{HV}{LV}$	No neutral accessible on HV winding
16	Yy0			A B C	— — —	A_2 - B_2 B_2 - C_2 C_2 - A_2	a_2 - b_2 b_2 - c_2 c_2 - a_2	$\frac{HV}{LV}$	No neutral accessible on HV & LV windings
17	YNyn6			A B C	— — —	A_2 - N B_2 - N C_2 - N	n - a_1 n - b_1 n - c_1	$\frac{HV}{LV}$	Neutral accessible on HV & LV windings
18	YNy6			A B C	B_2 - N C_2 - N A_2 - N	A_2 - N B_2 - N C_2 - N	* - a_1 * - b_1 * - c_1	$\frac{HV}{LV}$	No neutral accessible on LV winding
19	Yyn6			A B C	b_1- n c_1 - n a_1 - n	A_2 - * B_2 - * C_2 - *	n - a_1 n - b_1 n - c_1	$\frac{HV}{LV}$	No neutral accessible on HV winding

Table 5-6. Transformer Winding Phase Relationship (Australian Std. 2374, Part 4 - 1982)									
Copyright 1999© AVO International									
Diag No.	IEC Vector Group	Winding Connection		Phase Tested	Winding Shorted By TTR	Winding Tested		Measured Turn Ratio	Remarks
		High-Voltage Winding (HV)	Low-Voltage Winding (LV)			High-Voltage Winding	Low-Voltage Winding		
20	Yy6			A B C	— — —	A_2 - B_2 B_2 - C_2 C_2 - A_2	b_1 - a_1 c_1 - b_1 a_1 - c_1	$\frac{HV}{LV}$	No neutral accessible on HV & LV windings
21	Yzn1			A B C	— — —	A_2 - C_2 B_2 - A_2 C_2 - B_2	a_4 - n b_4 - n c_4 - n	$\frac{HV \bullet \sqrt{3}}{LV}$	With or without neutral accessible on wye winding
22	Yz1			A B C	B_2- C_2 C_2 - A_2 A_2 - B_2	A_2- (B_2 +C_2) B_2 - (C_2+A_2) C_2 - (A_2+B_2)	a_4 - b_4 b_4 - c_4 c_4 - a_4	$\frac{HV}{LV} \bullet \frac{\sqrt{3}}{2}$	No neutral accessible on HV & LV windings
23	Yzn11			A B C	— — —	A_2 - B_2 B_2 - C_2 C_2 - A_2	a_4 - n b_4 - n c_4 - n	$\frac{HV \bullet \sqrt{3}}{LV}$	With or without neutral accessible on wye winding
24	Yz11			A B C	B_2 - C_2 C_2 - A_2 A_2 - B_2	A_2 - (B_2+C_2) B_2 - (C_2+A_2) C_2 - (A_2+B_2)	a_4 - c_4 b_4 - a_4 c_4 - b_4	$\frac{HV}{LV} \bullet \frac{\sqrt{3}}{2}$	No neutral accessible on HV & LV windings
25	YNd1			A B C	— — —	A_2 - N B_2 - N C_2 - N	a_2 - b_2 b_2 - c_2 c_2 - a_2	$\frac{HV}{LV \bullet \sqrt{3}}$	Neutral accessible on wye winding

Table 5-6. Transformer Winding Phase Relationship (Australian Std. 2374, Part 4 - 1982)

Copyright 1999© AVO International

Diag No.	IEC Vector Group	Winding Connection		Phase Tested	Winding Shorted By TTR	Winding Tested		Measured Turn Ratio	Remarks
		High-Voltage Winding (HV)	Low-Voltage Winding (LV)			High-Voltage Winding	Low-Voltage Winding		
26	Yd1			A B C	$B_2 - C_2$ $C_2 - A_2$ $A_2 - B_2$	$A_2 - (B_2+C_2)$ $B_2 - (C_2+A_2)$ $C_2 - (A_2+B_2)$	$a_2 - b_2$ $b_2 - c_2$ $c_2 - a_2$	$\frac{HV}{LV} \bullet \frac{\sqrt{3}}{2}$	No neutral accessible on wye winding
27	YNd11			A B C	— — —	$A_2 - N$ $B_2 - N$ $C_2 - N$	$a_2 - c_2$ $b_2 - a_2$ $c_2 - b_2$	$\frac{HV}{LV \bullet \sqrt{3}}$	Neutral accessible on wye winding
28	Yd11			A B C	$B_2 - C_2$ $C_2 - A_2$ $A_2 - B_2$	$A_2 - (B_2+C_2)$ $B_2 - (C_2+A_2)$ $C_2 - (A_2+B_2)$	$a_2 - c_2$ $b_2 - a_2$ $c_2 - b_2$	$\frac{HV}{LV} \bullet \frac{\sqrt{3}}{2}$	No neutral accessible on wye winding
29	ZNd0			A B C	$b_2 - c_2$ $c_2 - a_2$ $a_2 - b_2$	$A_4 - N$ $B_4 - N$ $C_4 - N$	$a_2 - (b_2+c_2)$ $b_2 - (c_2+a_2)$ $c_2 - (a_2+b_2)$	$\frac{HV}{1.5\ LV}$	Neutral accessible on zigzag winding
30	Zd0			A B C	— — —	$A_4 - B_4$ $B_4 - C_4$ $C_4 - A_4$	$a_2 - b_2$ $b_2 - c_2$ $c_2 - a_2$	$\frac{HV}{LV}$	No neutral accessible on zigzag winding
31	ZNd6			A B C	$b_1 - c_1$ $c_1 - a_1$ $a_1 - b_1$	$A_4 - N$ $B_4 - N$ $C_4 - N$	$(b_1+c_1) - a_1$ $(c_1+a_1) - b_1$ $(a_1+b_1) - c_1$	$\frac{HV}{1.5\ LV}$	Neutral accessible on zigzag winding

Table 5-6. Transformer Winding Phase Relationship (Australian Std. 2374, Part 4 - 1982)

Copyright 1999© AVO International

Diag No.	IEC Vector Group	Winding Connection		Phase Tested	Winding Shorted By TTR	Winding Tested		Measured Turn Ratio	Remarks
		High-Voltage Winding (HV)	Low-Voltage Winding (LV)			High-Voltage Winding	Low-Voltage Winding		
32	Zd6			A B C	— — —	$A_4 - C_4$ $B_4 - A_4$ $C_4 - B_4$	$b_1 - a_1$ $c_1 - b_1$ $a_1 - c_1$	$\frac{HV}{LV}$	No neutral accessible on zigzag winding
33	ZNy1			A B C	— — —	A_4 - N B_4 - N C_4 - N	$a_2 - b_2$ $b_2 - c_2$ $c_2 - a_2$	$\frac{HV}{LV \bullet \sqrt{3}}$	No accessible neutral on LV winding
34	Zy1			A B C	$B_4 - C_4$ $C_4 - A_4$ $A_4 - B_4$	$A_4 -(B_4+C_4)$ $B_4 -(C_4+A_4)$ $C_4 -(A_4+B_4)$	$a_2 - b_2$ $b_2 - c_2$ $c_2 - a_2$	$\frac{HV}{LV} \bullet \frac{\sqrt{3}}{2}$	No neutral accessible on HV & LV windings
35	ZNy11			A B C	— — —	A_4 - N B_4 - N C_4 - N	$a_2 - c_2$ $b_2 - a_2$ $c_2 - b_2$	$\frac{HV}{LV \bullet \sqrt{3}}$	No accessible neutral on LV winding
36	Zy11			A B C	$B_4 - C_4$ $C_4 - A_4$ $A_4 - B_4$	$A_4 -(B_4+C_4)$ $B_4 -(C_4+A_4)$ $C_4 -(A_4+B_4)$	$a_2 - c_2$ $b_2 - a_2$ $c_2 - b_2$	$\frac{HV}{LV} \bullet \frac{\sqrt{3}}{2}$	No neutral accessible on HV & LV windings

6 OPERATION

General Operating Procedure

Proceed only after reading and fully understanding Section 2, Safety, and setting up the test set as described. An operator who is familiar with the contents of this manual, the test setup, and the operation of the test set may follow the condensed operating instructions in the lid of the test set.

EMERGENCY SHUTDOWN
Press red EMERGENCY TEST OFF push button or switch power off.

Description of Menus and Test Screens

Data shown on the menus and test screens in Figures 6-1 through 6-16 are for illustrative purposes only. The TTR test set menus and test screens are operated by using the keypad on the front panel. On power up, a beep sounds, the test set performs a self-test check, and all hardware and software variables are initialized.

NOTE: See also page 4-2 for Operational Flow Chart.

Opening Display Screen (Figure 6-1)

The LCD then displays the opening screen (Figure 6-1) and a beep sounds as the test set performs a diagnostic self-check of the electronics.

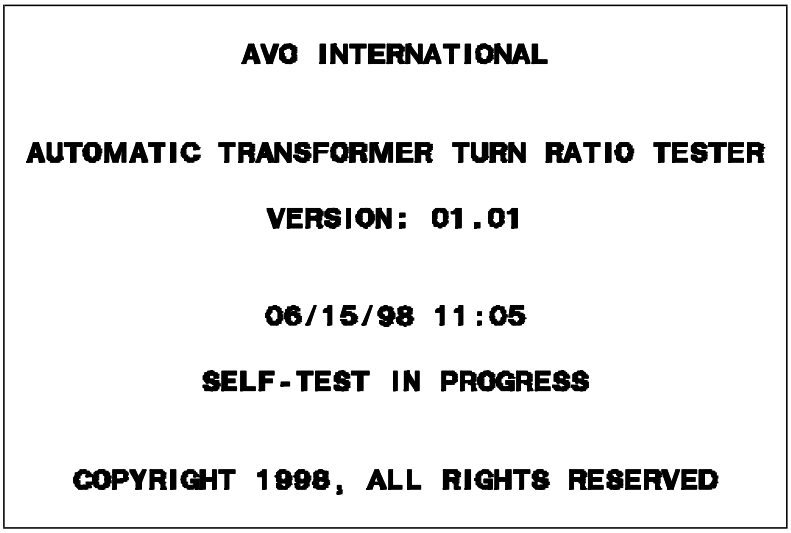

Figure 6-1. Opening Display Screen

If any errors are detected, one of the following error messages will replace the SELF-TEST IN PROGRESS message on the screen and be accompanied by three short beeps.

ANALOG OFFSET VOLTAGE HIGH
ANALOG GAIN OUT OF TOLERANCE

If either error message is displayed, return the instrument to AVO International for repair. Refer to Repair section for instructions. If no errors are detected, the main menu screen (Figure 6-2) appears.

MAIN MENU Screen (Figure 6-2)

After a successful self-test check, the main menu screen (Figure 6-2) appears.

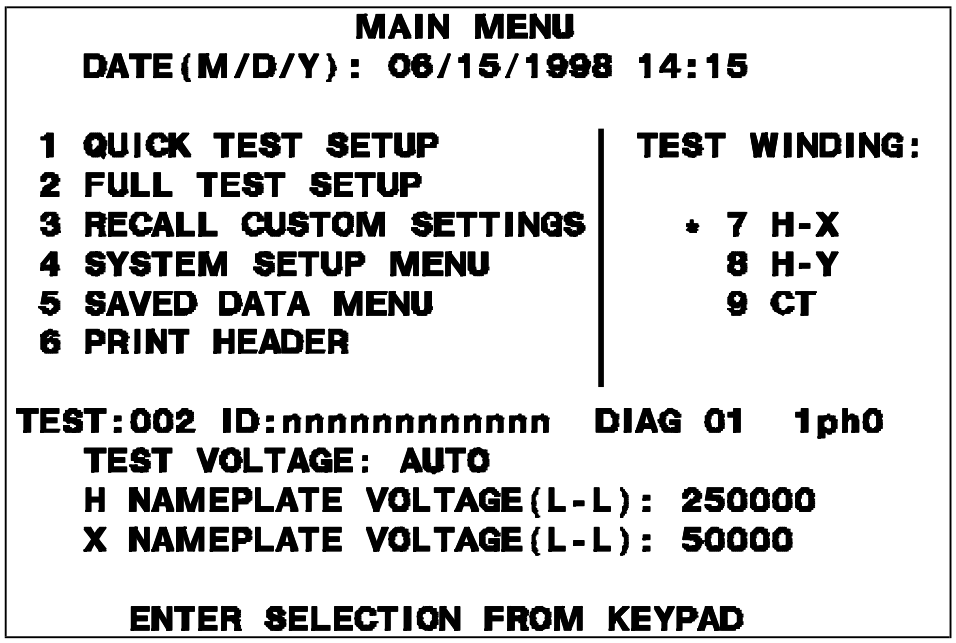

Figure 6-2. Main Menu Screen

DATE (M/D/Y): This line shows the current date and time. Date format is month/day/year. To change date/time, select 4 (SYSTEM SETUP MENU) and then select 2 (SET DATE(M/D/Y)/TIME) on the SYSTEM SETUP menu (see Figure 6-12).

1 QUICK TEST SETUP: This setup provides a quick path for transformer testing. It requires minimum transformer nameplate information to be entered before testing. The test results displayed do not include the calculated ratio and ratio deviation values.

2 FULL TEST SETUP: This setup requires entering main transformer nameplate information. The FULL TEST SETUP is used for obtaining full test information of a transformer. This setup may be saved and recalled later for future testing of the same or similar type transformers. In this case (RECALL CUSTOM SETTINGS), no additional information needs to be entered to start testing, other than the transformer serial number (TRANSFOMER ID) if desired.

3 RECALL CUSTOM SETTINGS:	This option permits saving up to nine custom transformer settings. These saved custom transformer settings may be recalled and used for testing the same or similar type of transformer.
4 SYSTEM SETUP MENU:	This menu permits choice of language, transformer standard, test voltage, phase display units and setting of date and time.
5 SAVED DATA MENU:	The TTR saves up to 200 test results. This menu allows these readings to be recalled for viewing and uploading to a PC.
6 PRINT HEADER:	This option will print out a test report header to the printer, if connected.
TEST WINDING:	Selection 7, 8, and 9 allow an operator to choose the windings to be tested. Asterisk (*) indicates last selection used. See description of the following screens for more details.

Test parameters shown on the bottom of the main menu screen are from the last test performed.

QUICK TEST SETUP Screen (Figure 6-3)

If 1 (QUICK TEST SETUP) is selected on the main menu, the QUICK TEST SETUP screen (Figure 6-3) appears.

Figure 6-3. Quick Test Setup Screen

1 TRANSFORMER ID:	This selection allows you to enter up to a 12-character alphanumeric identification of a transformer. Skip this step if you do not want to enter this information. When selected, the screen appears the same as Figure 6-3 except for a message at bottom of screen: ENTER UP TO 12 CHARACTER ID. USE * TO SELECT LETTER. A cursor will blink on the line next to TRANSFORMER ID.
2 TRANSFORMER TYPE:	This selection is used to enter the diagram number (vector group) of the transformer to be tested. This diagram number must be entered for testing any transformer windings (see selections 7, 8, 9 on the Main Menu screen). When 2 (TRANSFORMER TYPE) is selected, the screen appears the same as Figure 6.3 except for message at bottom of screen: ENTER TRANSFORMER DIAGRAM NUMBER. REFER TO TABLE ON INSTRUCTION CARD. Cursor will blink on the line next to TRANSFORMER TYPE (in place of "DIAG 01 1ph0").
3 START TEST:	This selection initiates testing of a transformer. See Figure 6-4 for the next screen displayed (Initial Quick Test Result Screen).
4 MAIN MENU:	This selection returns you to the main menu screen, Figure 6-2.

Quick Test Result Screens (Figure 6-4 and Figure 6-5)

If 3 (START TEST) is selected on the QUICK TEST SETUP menu, Figure 6-3, the initial quick test result screen shown in Figure 6-4 appears. This screen is displayed during testing of a transformer.

Figure 6-4. Initial Quick Test Result Screen

The TEST IN PROGRESS message indicates that the TTR test set is performing a test. The test may be interrupted by pressing the EMERGENCY TEST OFF button, located on the front panel. When pressed, the EMERGENCY TEST OFF switch is locked in the off position. To reset the switch, twist the button in the direction indicated by the arrows. When the test is completed, the final quick test result screen shown in Figure 6-5 appears.

If abnormal operating conditions occur during testing phase B or C of a three phase transformer, an error message (refer to Error Messages section) will appear on the bottom of the screen followed by the message " PRESS ANY KEY TO CONTINUE." In this case, if any key is pressed, the following message will appear on the bottom of the screen:

"Select 1 – REPEAT TEST 2 – CONTINUE
3 – ABORT TEST"

If REPEAT TEST is selected, the test set will re-test phase B or C.
If CONTINUE is selected, the test set will start testing of phase C (if an error message appeared during phase B testing).
If ABORT TEST is selected, the Main Menu screen will appear.

If one of these error messages appears, verify the abnormal condition by taking a repeat measurement before attempting to take any corrective action. If an error message appears during phase A testing, and repeat measurement is still bad, it is impossible to continue testing of the transformer, and troubleshooting procedure should be started by testing each phase of the three phase transformer separately as a single phase transformer.

Figure 6-5. Final Quick Test Result Screen

1 PRINT:	This selection allows the test result to be printed out (on an optional printer or uploaded to PC.
2 STORE:	This selection allows the test result to be saved in memory for future viewing and/or printing and/or uploading to PC.
3 NEXT TEST:	When selected, the QUICK TEST SETUP screen, Figure 6-3, appears. You may change connections and continue testing with the same transformer (for example, with a different tap of the high voltage winding) or you may start testing a new transformer.
4 REPEAT TEST:	This selection allows you to repeat the last test.
5 MAIN MENU:	This selection brings back the MAIN MENU screen (Figure 6-2).

FULL TEST SETUP 1 Screen (Figure 6-6)

If 2 (FULL TEST SETUP) is selected on the main menu, the FULL TEST SETUP 1 screen (Figure 6-6) appears.

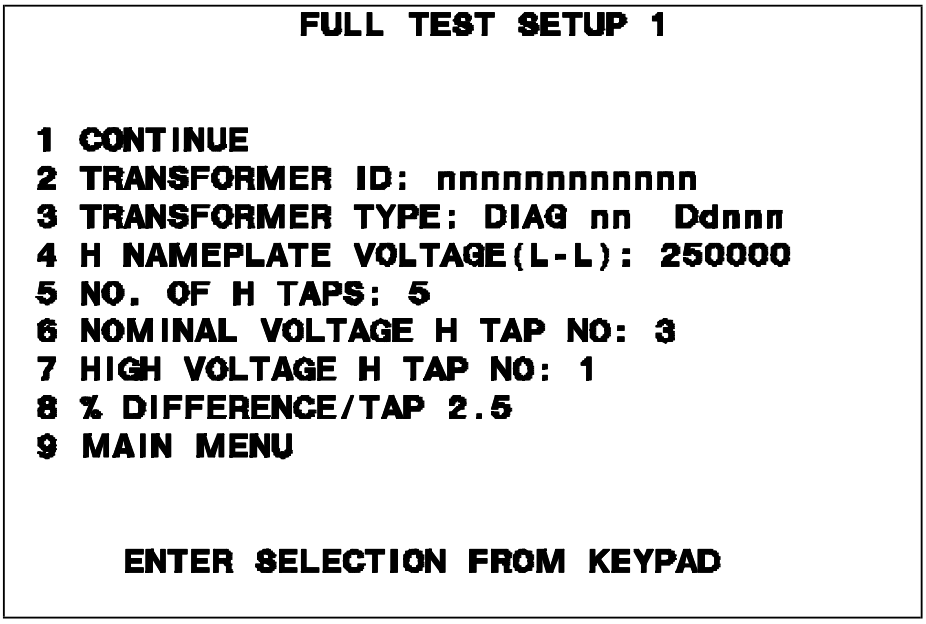

Figure 6-6. FULL TEST SETUP 1 Screen

The last tested transformer information (previously entered) is displayed on the screen.

1 CONTINUE:	This selection brings up the FULL TEST SETUP 2 screen (Figure 6-7).
2 TRANSFORMER ID:	This selection allows you to enter up to a 12 character alphanumeric identification of a transformer. Skip this step if you do not want to enter this information. When selected, the screen appears the same as Figure 6-6 except for a message at bottom of screen: ENTER UP TO 12 CHARACTER ID. USE * TO SELECT LETTERS. A cursor will blink on the line next to TRANSFORMER ID.
3 TRANSFORMER TYPE:	This selection is used to enter the diagram number (vector group) of the transformer to be tested. This diagram number must be entered for testing a transformer. Diagram numbers for the most common types of transformers are included on the instruction cards in the lid of the TTR test set. When selected, the screen appears the same as Figure 6-6, except for the message at bottom of screen: ENTER TRANSFORMER DIAGRAM NUMBER, REFER TO TABLE ON INSTRUCTION CARD. A cursor will blink on the line next to TRANSFORMER TYPE.

4 H NAMEPLATE VOLTAGE (L-L):	This selection is used to enter the nameplate high voltage (H) rating of the transformer to be tested (L-L stands for line to line). The transformer under test nameplate high voltage is used to calculate the transformer turn ratio when test winding 7 (H-X) or 8 (H-Y) is selected on the Main Menu screen (see Figure 6-2). When test winding 9 CT is selected on the Main Menu screen (see Figure 6-2), entry 4 H NAMEPLATE VOLTAGE (L-L) is replaced by 4 PRIMARY CURRENT (A), and selections 5, 6, 7, 8 of the FULL TEST SETUP 1 screen will go off. In this case selection 4 PRIMARY CURRENT (A) is used to enter the nameplate primary current of a current transformer tested.
5 NO. OF H TAPS:	This selection is used to enter the number of taps on the high side (H) of the transformer to be tested. If the high side winding does not have any taps, enter 0 (selections 6, 7, and 8 will go off.)
6 NOMINAL VOLTAGE H TAP NO:	This selection is used to enter the tap number of the nominal voltage of the high side (H) of the transformer.
7 HIGH VOLTAGE H TAP NO:	This selection is used to enter the tap number of the highest input voltage of the transformer.
8 % DIFFERENCE/TAP	This selection is used to enter the high voltage difference (in percent) per tap. Use the following formula to calculate this difference: (Vmax – Vmin) ÷ Vnameplate (n – 1) x 100%. Where n = number of H taps. If a nameplate has information on total change of voltage in percent (for example, +/- 10% from nominal voltage), the following formula may be used to calculate the difference per tap: (Total % of voltage change) ÷ (n – 1). Where n = number of H taps.
9 MAIN MENU:	This selection returns you to the MAIN MENU screen, Figure 6-2.

FULL TEST SETUP 2 Screen (Figure 6-7)

If 1 is selected on the FULL TEST SETUP 1 screen, the FULL TEST SETUP 2 screen (Figure 6-7) appears.

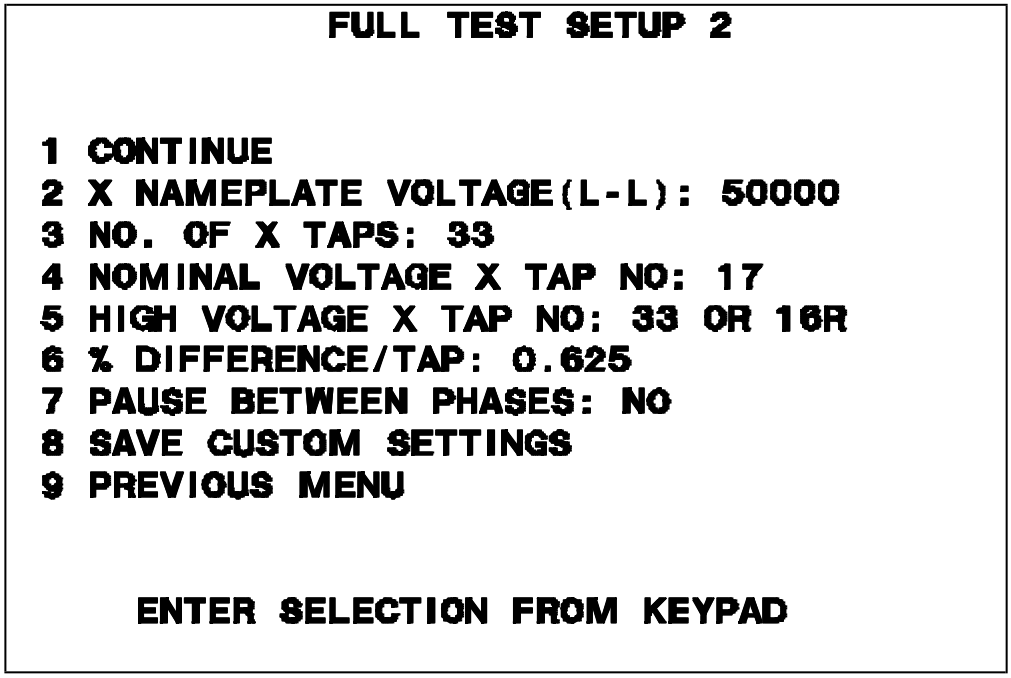

Figure 6-7. FULL TEST SETUP 2 Screen

The previously entered information from the last transformer tested is displayed on the screen.

1 CONTINUE: This selection brings up the FULL TEST SETUP 3 screen shown in Figure 6-8.

2 X NAMEPLATE VOLTAGE (L-L): This selection is used to enter the nameplate low voltage rating of the transformer to be tested (L-L stands for line to line). The transformer-under-test nameplate low voltage is used to calculate the transformer turn ratio.

When test winding 8 (H-Y) is selected on the Main Menu screen (see Figure 6-2), entry 2 X NAMEPLATE VOLTAGE (L-L) is replaced by 2 Y NAMEPLATE VOLTAGE (L-L). In this case this selection is used to enter the tertiary (Y) nameplate low voltage rating of the transformer to be tested (L-L stands for line to line).

When test winding 9 CT is selected on the Main Menu screen (see Figure 6-2), entry 2 X NAMEPLATE VOLTAGE (L-L) is replaced by 2 SECONDARY CURRENT (A), and selections 3, 4, 5, 6, of the FULL

	TEST SETUP 2 screen will go off. In this case selection 2 SECONDARY CURRENT (A) is used to enter the nameplate secondary current of a current transformer tested.
3 NO. OF X TAPS:	This selection is used to enter the number of taps on the low side (X) of the transformer. If the low side winding does not have any taps, enter 0 (selections 4, 5, and 6 will go off).
4 NOMINAL VOLTAGE X TAP NO:	This selection is used to enter the tap number of the nominal output voltage of the low side (X) of the transformer.
5 HIGH VOLTAGE X TAP NO:	This selection is used to enter the tap number of the highest output voltage of the transformer.
6 % DIFFERENCE/TAP	This selection is used to enter the low voltage difference (in percent) per tap. Use the following formula to calculate this difference: (Vmax – Vmin) ÷ Vnameplate (n – 1) x 100%. Where n = number of X taps. If a nameplate has information on total change of voltage in percent (for example, +/- 10% from nominal voltage), the following formula may be used to calculate the difference per tap: (Total % of voltage change) ÷ (n – 1). Where n = number of X taps.
7 PAUSE BETWEEN PHASES:	For this selection, there are two choices — NO or YES. If NO is chosen, the TTR will test all three windings and display the test results as shown in Figure 6-9 (THREE PHASE TRANSFORMER TEST result screen). If YES is chosen, the TTR will test the first phase of a transformer and display the test results as shown in Figure 6-10 (Phase A Test Result Screen).
8 SAVE CUSTOM SETTINGS:	This selection allows to save up to nine custom transformer settings. See Figure 6-15, Recall (or Save) Custom Transformer Settings Screen.
9 PREVIOUS MENU:	This selection returns you to the FULL TEST SETUP 1 screen (Figure 6-6).

FULL TEST SETUP 3 Screen (Figure 6-8)

If 1 is selected on the FULL TEST SETUP 2 screen, the FULL TEST SETUP 3 screen appears (Figure 6-8).

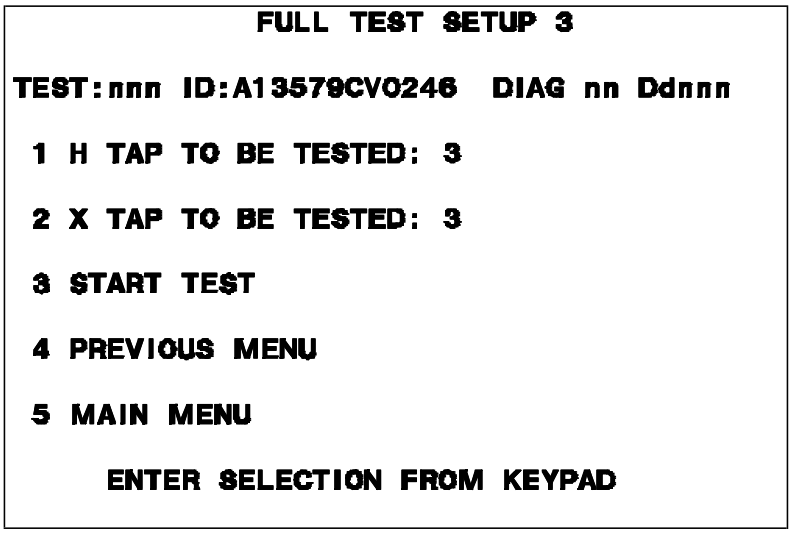

Figure 6-8. FULL TEST SETUP 3 Screen

The test number, ID and diagram are shown on the first line.

Selections 1 and 2 allow to test any pairs of H and X taps. If the transformer under test does not have any taps, only selections 3, 4, and 5 will be displayed on the screen. If 3 (START TEST) is selected, see Figure 6-4 for the next screen displayed. The % DEVIATION heading will also be shown on the screen.

1 H TAP TO BE TESTED: This selection is used to enter the H tap number to be tested when test winding 7 H-X or 8 H-Y is selected on the Main Menu screen (see Figure 6-2).

When test winding 9 CT is selected on the Main Menu screen this entry will go off.

2 X TAP TO BE TESTED: This selection is used to enter the X tap number to be tested when test winding 7 H-X is selected on the Main Menu screen (see Figure 6-2). When test winding 8 (H-Y) is selected on the Main Menu screen, entry 2 X TAP TO BE TESTED is replaced by 2 Y TAP TO BE TESTED. When test winding 9 CT is selected on the Main Menu screen (see Figure 6-2), this entry will go off.

3 START TEST: This selection initiates testing of a transformer. If selected, the screen shown in Figure 6-4 will appear.

4 PREVIOUS MENU: This selection will return you to the FULL TEST SETUP 2 screen (Figure 6-7).

5 MAIN MENU: This selection returns you to the MAIN MENU screen (Figure 6-2).

Transformer Test Result Screens (Figure 6-9 and Figure 6-10)

When test is completed with NO pauses between phases chosen (selection 7, Figure 6-7) the test results are displayed as in Figure 6-9 (Three-Phase Transformer Test Results Screen).

Figure 6-9. Three-Phase Transformer Test Result Screen

1 PRINT: This selection prints out the test results.

2 STORE: This selection stores the test results.

3 NEXT TEST: This selection brings up the FULL TEST SETUP 3 screen (Figure 6-8). At this point you may specify another pair of transformer taps to be tested.

4 REPEAT TEST: This selection repeats the last test. If the transformer under test does not have any taps the Main Menu screen appears.

5 MAIN MENU: This selection displays the MAIN MENU (Figure 6-2).

When test is completed with pauses between phases selected (YES chosen on selection 7, Figure 6-7), the screen shown in Figure 6-10 (Phase A Test Result Screen) appears after phase A test is complete.

If abnormal operating conditions occur during testing phase B or C of a three phase transformer, an error message (refer to Error Messages section) will appear on the bottom of the screen followed by the message " PRESS ANY KEY TO CONTINUE." In this case, if any key is pressed, the following message will appear on the bottom of the screen:

"Select 1 – REPEAT TEST 2 – CONTINUE
3 – ABORT TEST"

If REPEAT TEST is selected, the test set will re-test phase B or C.
If CONTINUE is selected, the test set will start testing of phase C (if an error message appeared during phase B testing).
If ABORT TEST is selected, the Main Menu screen will appear.

If one of these error messages appears, verify the abnormal condition by taking a repeat measurement before attempting to take any corrective action. If an error message appears during phase A testing, and repeat measurement is still bad, it is impossible to continue testing of the transformer, and troubleshooting procedure should be started by testing each phase of the three phase transformer separately as a single phase transformer.

Figure 6-10. Phase A Test Result Screen

1 REPEAT TEST: This selection allows repeat testing of the same phase (last phase tested, A,B, or C). Refer to following paragraphs.

2 CONTINUE: This selection will initiate testing of the next phase. Refer to following paragraphs.

You may repeat testing of the phase (select 1 REPEAT) or continue testing the transformer (select 2 CONTINUE). If 2 is selected, phase B will be tested. After completion of the phase B testing, the test result will be displayed next to phase A test results. The same two selections (1 REPEAT and 2

CONTINUE) are shown on the screen. Selection 1 allows repeating of the phase B testing. Selection 2 starts the phase C testing.

After completion of the phase C testing, the test result will be displayed next to phase B test results. The same two selections are shown on the screen. Selection 1 allows repeating of the phase C testing. Selection 2 will bring up the five selections shown in Figure 6-9.

If abnormal operating conditions occur during testing a transformer, an error message will appear on the screen. Refer to Error Messages section. If one of these messages appears, verify the abnormal condition by taking a repeat measurement before attempting to take any corrective action.

Main Menu Screen When a Custom Transformer Setting Recalled (Figure 6-11)

After selection of a custom transformer setting, the MAIN MENU will appear as shown in Figure 6-11. It will display the main parameters of the saved custom settings, including the H and X nameplate voltages, the diagram number and the test set voltage. The ID number will be blank. The test number shows the number of the next test to be run.

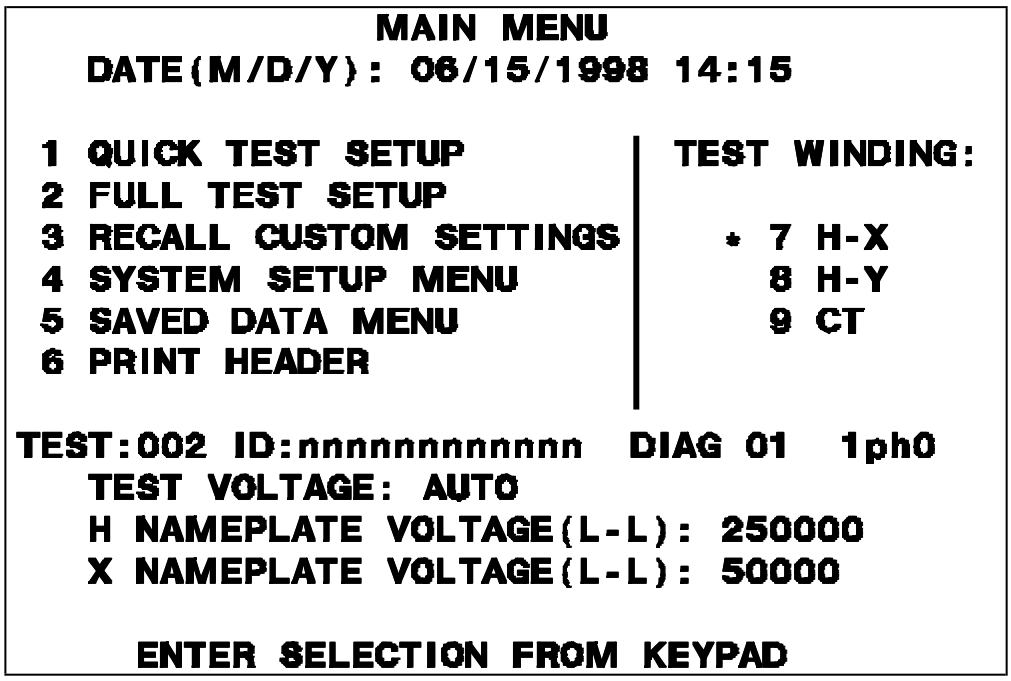

Figure 6-11. The Main Menu Screen After Selection of a Custom Transformer Setting

Full Test Setup 1, 2, and 3 screens will display the custom transformer setting recalled.

SYSTEM SETUP Menu (Figure 6-12)

When selection 4 (SYSTEM SETUP MENU) on the MAIN MENU is chosen, the SYSTEM SETUP MENU screen appears as shown in Figure 6-12.

Figure 6-12. SYSTEM SETUP Screen

1 LANGUAGE:	This selection allows a choice of six languages. See Figure 6-13 for LANGUAGE screen.
2 SET DATE/TIME:	This selection is for entering the date and time. Year has four-digit representation (mm/dd/yyy).
3 STANDARD:	This selection is for entering the desired transformer standard. Three transformer standards are available to select from: ANSI, IEC, or AS (Australia Standard).
4 TEST VOLTAGE:	This selection is for entering the desired test voltage. There are four selections available: • AUTO — the TTR will automatically test at the highest allowable excitation voltage (80 V, 40 V, or 8 V), depending on the transformer excitation current measured. • 80 V — the test voltage is 80 Volts. • 40 V — the test voltage is 40 Volts. • 8 V — the test voltage is 8 Volts.

5 PHASE DISPLAY:	This selection allows a choice of the phase display units: DEGREE, CENTIRADIAN or NO DISPLAY. If DEGREE is selected, any phase test results below 1 degree will be displayed in minutes. If CENTIRADIAN is selected, the phase test results will be displayed in centiradians (1 centiradian = 0.573 degrees). If NO is selected, the phase test results will not be displayed.
6 MAIN MENU:	This selection returns you to the MAIN MENU screen.

LANGUAGE Screen (Figure 6-13)

Use this screen to select a language. Text on all screens except for the opening display screen will appear in the language chosen.

Figure 6-13. Language Screen

SAVED DATA Screen (Figure 6-14)

When 5 (SAVED DATA MENU) is selected on the MAIN MENU screen (Figure 6-2), the SAVED DATA screen appears as shown in Figure 6-14.

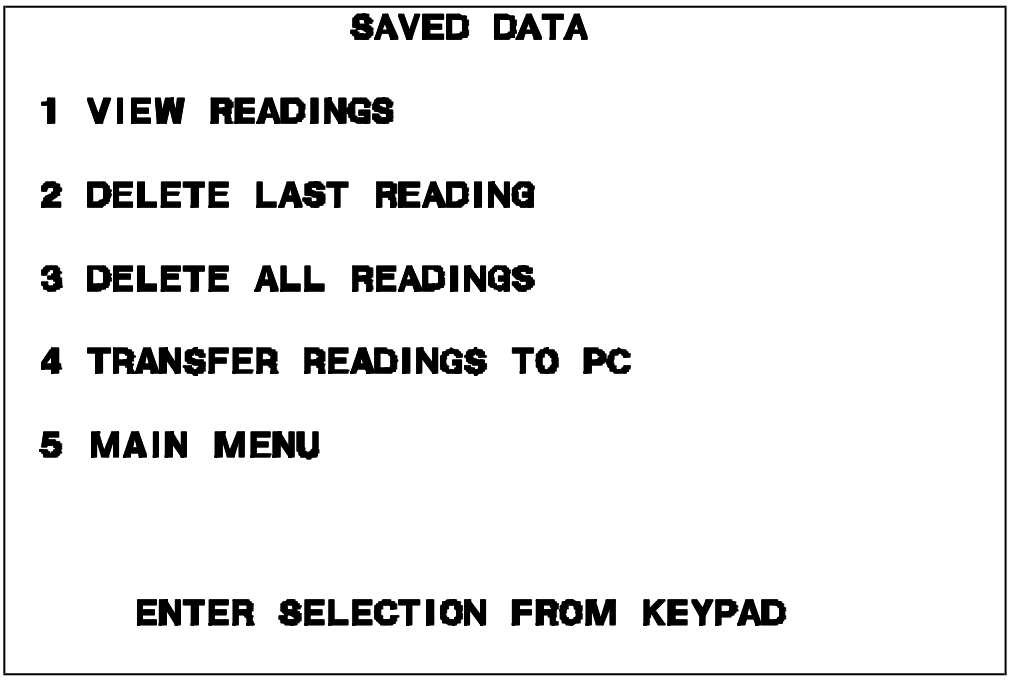

Figure 6-14. SAVED DATA Screen

Use this menu to view, delete, or transfer to a PC the saved test results.

1 VIEW READINGS:	This selection allows you to specify the first test number to view and then (on prompt) the number of tests to view. The test results will be displayed on the screen. A prompt line will show three prompts: 0 NEXT, 1 PRINT, and 2 EXIT. Select NEXT to view the next reading in numerical order; select PRINT to print test results; Select EXIT to return to SAVED DATA screen.
2 DELETE LAST READING:	This selection deletes from memory the last reading saved.
3 DELETE ALL READINGS:	This selection deletes all readings from memory.
4 TRANSFER READINGS TO PC:	This selection allows to select which test results to transfer to a PC.
5 MAIN MENU:	This selection returns you to the MAIN MENU screen (Figure 6-2).

Recall (or Save) Custom Transformer Settings (Figure 6-15)

If 3 (RECALL CUSTOM SETTINGS) is selected on the MAIN MENU screen (Figure 6-2), the RECALL CUSTOM SETTINGS screen appears as shown in Figure 6-15.

If 8 (SAVE CUSTOM SETTINGS) is selected on the FULL TEST SETUP 2 menu (Figure 6-7), the screen appears the same as in Figure 6-15 except that the headline will be changed to SAVE CUSTOM SETTINGS.

Figure 6-15. Recall (or Save) Custom Settings Screen

The following message will be displayed if a selection without data is recalled:
NO DATA IN SELECTED CUSTOM SETTING, PRESS ANY KEY TO CONTINUE.

The following message will be displayed if your selection to save data already contains data:
CUSTOM SETTING 1 (i.e.) HAS DATA! OVERWRITE? 0 = YES, 1 = NO

Saved data will be overwritten by selecting YES.

Selecting NO will return you to the SAVE CUSTOM SETTINGS screen.

Error Messages

When an error message appears in the transformer test result screen indicating an abnormal operating condition, verify the condition by taking a repeat measurement before attempting to take any corrective action. Also, refer to the Troubleshooting section for malfunctions and possible causes.

Open connections, wrong connections, open windings, shorted windings, high resistance windings, other abnormal transformer problems, or a combination of these may cause a large deviation from normal turn ratio or indicate an unusual message. The unusual operating conditions may be caused by an abnormal leakage reactance or capacitive coupling within the transformer windings. If abnormal operating conditions occur during transformer testing, the following error messages will appear on the quick test result screen and the transformer test result screen, accompanied by three short beeps.

CHECK CONNECTIONS
This message indicates that the transformer is not connected to the test set. The message may be caused by poor connection of one of the test leads, as well.

PHASE A (or B, or C) EXCITATION CURRENT TOO HIGH
This message indicates that excitation current exceeds 500 mA. Excitation current can be reduced by using lower test voltages (40 V or 8 V).

TURNS RATIO TOO LOW, <0.8
This message shows that a transformer under test turn ratio is less than 0.8. The TTR is not designed to test a transformer turn ratio under 0.8.

PHASE A (or B, or C) TURNS RATIO TOO HIGH
This message shows that a transformer under test turn ratio is higher than 10,000 (if 80 V or 40 V is used) or is higher than 4,000 (if 8 V is used). The message may be caused by poor connection of one of the test leads, as well.

CHECK PHASE A (or B, or C) CONNECTIONS, REVERSED
This message is caused by incorrect connection of the H and X leads. The H and X leads have either been reversed or the test transformer connections or markings do not comply with the requirements of ANSI, IEC, or the Australian standard. The message may be caused by wrong diagram number specified, as well.

CHECK PHASE A (or B, or C) POLARITY
This message shows that the H or X test leads are incorrectly connected or the test transformer connections or markings do not comply with the requirements of ANSI, IEC, or the Australian standard.

If self-test fails, one of the following error messages will appear on the opening display screen and you should return the test set to AVO International for repair. Refer to Repair section for instructions.

ANALOG OFFSET VOLTAGE HIGH
ANALOG GAIN OUT OF TOLERANCE
CAN NOT DETECT FLASH RAM
FAILED PROGRAM CODE CHECK
PLEASE SHUT DOWN AND CHECK THE MANUAL
CHECKING ALTERA: GOOD (BAD)
CHECKING DISPLAY: GOOD (BAD)
CHECKING RAM: GOOD (BAD)

Remote Control Operation

Use the remote control mode of the TTR for load tap changer (LTC) testing. This mode provides two-way-communication between the operator and the TTR, allowing you to stay close to an LTC, change taps, and initiate the test routine.

Connect the hand-held control unit to the RS232 port of the TTR. At power-up, the TTR detects that the hand-held control unit is connected.

To start testing, specify the transformer diagram number and press START. The remote control unit pushbutton lamp will go on. Then depress the remote control unit pushbutton for a short time then release. The pushbutton lamp extinguishes until the TTR is ready for the next test. When testing is complete, test results are saved, the test ID is advanced to the next number, the pushbutton lamp lights, and the TTR test set is ready for the next remote test.

Use with the Optional Printer

If you are using the optional printer, plug the printer cable into the RS232/PRINTER receptacle on the TTR test set and turn it on. A separate manual is supplied with the printer. Refer to it for specific information about how to connect, operate, and care for the printer.

Select 6 PRINT HEADER on the main menu to print out a test report header. Select 1 PRINT on the final quick test result screen or the three-phase transformer test result screen to print out test results. A sample printout is shown in Figure 6-16a, 6-16b, and 6-16c.

AVO INTERNATIONAL
AUTOMATIC TRANSFORMER TURN RATIO TESTER
CATALOG NO. 550503

_____

TRANSFORMER TEST REPORT
COMPAMY:_____
SUBSTATION:_____
MANUFACTURER:_____
TRANSFORMER RATING:_____kVA/MVA
AMBIENT TEMPERATURE:_____
RELATIVE HUMIDITY:_____
TTR S/N:_____
OPERATOR (S):_____
_____
_
COMMENTS/NOTES:

Figure 6-16a. Sample Test Report Header

DATE (M/D/Y) : 06/01/1999 12:25
TEST: 002
TRANSFORMER ID: 456xxx
TYPE: SINGLE PHASE TRANSFORMER 1ph0
TAPS TESTED: 3 – 17
H VOLTAGE: 10000
X VOLTAGE: 10000
CALCULATED TURNS RATIO: 1.0000
TEST VOLTAGE: 8V

RATIO	1.0013
% DEVIATION	0.13
PHASE(min)	-14.7
Iexc(ma)	0.00

Figure 6-16b. Sample Single Phase Test Report

DATE (M/D/Y) : 06/01/1999 1:25
TEST: 003
TRANSFORMER ID: 789xxx
TYPE: SINGLE PHASE TRANSFORMER Dy6
TAPS TESTED: 3 - 16L
H VOLTAGE: 250000
X VOLTAGE: 50000
CALCULATED TURNS RATIO: 5.0000
TEST VOLTAGE: 80V

	A	B	C
RATIO	5.006	4.998	5.011
% DEVIATION	0.12	0.04	0.22
PHASE(min)	5.3	6.5	7.9
Iexc(ma)	8.5	9.1	7.6

Figure 6-16c. Sample Three Phase Test Report

Use with the Optional Inverter

The TTR may be used with the optional inverter. This feature is important when the mains is not accessible or it is not reliable (the voltage variations are too high, too noisy, or frequency changes are not acceptable.) In this case, the optional inverter XP 125 may be used as a reliable source of true sine wave power supply. The XP 125 inverter provides both 120 V ac and 230 V ac at frequency 50 Hz or 60 Hz. The XP 125 use a car battery as a source of input power. See Section 8 for ordering information.

To operate, simply plug the cigarette lighter adaptor in and plug in the TTR test set. Keep your vehicle running when operating the inverter. The XP 125 inverter will source up to 125 W load. To maximize the performance of the inverter, keep the battery and other electrical connectors clean and free of corrosion. Always unplug the inverter when it is not in use. The inverter has numerous built-in protection features which prevent internal damage. The most important of these features include:

1. Low battery voltage – if the battery voltage at the inverter drops below the under voltage cut-off (10.6 V dc), the inverter will automatically shut off. When battery voltage increases to 95 % of nominal battery voltage (13. 8 V dc), the inverter will restart.

2. High battery voltage – if the battery voltage input rises above the over voltage cut-off (16.5 V dc), the inverter will automatically shut off. When the battery voltage input drops back to the normal voltage range, it will turn itself back on.

3. Over-temperature – if the inverter gets too hot due to high ambient temperature, blocked air flow or overload conditions it will automatically shut off. However, when the inverter reaches an acceptable temperature it will automatically turn back on.

4. Overpower – the inverter will source up to it’s maximum power rating, however, if the load requires more than this, the output voltage will be lowered to supply no more than it’s maximum power. In this way, the maximum power from the inverter is reduced to a safe amount.

Using AVOLink Program

Introduction

AVOLink program provides the operator interface for:

- transferring readings from TTR to a PC
- viewing test data
- printing out test reports
- creating transformer test results database

Test data stored in the internal memory of the TTR test set may be transferred to a PC. AVOLink program supplied with the TTR provides the operator interface for transferring stored data from the TTR to the PC. With this software the user can print out test reports from the PC and save the test data as a (.txt) file or into the database incorporated into the AVOLink Upload software. With these two file formats the user can either open the data into an Excel spreadsheet or open the database using MS Access.

System Requirements

Windows NT3.1 or, Windows 95 or later as your operating system.[1]
An 80386 Processor or higher
A VGA monitor or one with higher screen resolution
Set the Display Properties for the Desktop area 800 by 600 pixels and small fonts.
16 M of RAM
Comm port 9600 Baud or better
3 ¼ floppy drive HD

Installation

The AVOLink files are contained on the original shipping diskette.
To install the program, insert the AVOLINK install disk 1 into the floppy drive.

- On Windows 95 or Windows NT 4.0: select Run from the Taskbar Start menu, type the full name of the file (for example, A:\Setup.exe), press the Enter key, and follow the prompts.

- On Windows NT 3.1: activate the Program Manager, select Run from the File menu, type the full name of the file (for example, A:\Setup.exe), press the Enter key, and follow the prompts.

- AVOLINK is a 32-bit program and Win 3.1 won't handle it.

Upgrade Instructions

Follow the installation instructions above. You can install the upgraded version of AVOLink to the same location as a previously installed copy of AVOLink.

[1] Windows NT, Windows 95, and MS ACCESS is registered trademark of Microsoft Inc.

Documentation

For full documentation, press the F1 key or click on the help button on the main screen. For context sensitive help, click on the help button on the screen you are working on.

Usage

Once the software is installed, all that is needed is to press "Start" on the menu bar then select "Program\AVOLink\AVOLink" to start the AVO TTR Upload software.

For first time usage, a message may appear; THE REQUESTED PROGRAM TOOK TOO LONG TO START UP. C:\Program Files\AVO International\AVOLink\AVOCom32.exe. Click OK and open the tab SETUP SERIAL PORT. Select the com. port to be used and save settings.

Transferring readings from TTR to PC (Get from TTRwindow)

To transfer data to a PC, log to the disk drive and or directory that contains the AVOLink program and select it. Connect the TTR RS232 port to the PC through a cable
(AVO p/n 35248) supplied.

The AVOLink program starts with the opening window. Select the tab Setup Serial Port Window. The AVOLink Setup serial port window will appear. This window allows you set up the serial port for communication to the remote device.

The baud rate, parity, stop bits and data bits must match exactly those in the remote device. The following parameters should be selected:

- Baud Rate: 9600
- Parity: N(none)
- Stop bits: 1
- Data bits: 8
- Select the com. port to be used

Select Save Settings to set the serial port parameters to those you selected and to initialize the serial port.
Select Restore Settings to leave the serial port parameters unchanged.

Press Get from TTR button. The opening window will appear.
All the test data transferred from the TTR is stored in an ASCII text file. The data items in each test are separated by commas. Each test is separated by a carriage return and line feed.

Before transferring data from the TTR to a PC:

- specify the path where the test data file is stored.
- specify the file name which will contain the test data.

On the TTR:

- select 5 (SAVED DATA) from the Main Menu screen
- select 4 (TRANSFER READINGS TO PC) on SAVED DATA screen
- enter start test number to be transferred to a PC, then press ENT
- enter number of tests to be transferred to a PC, at this time DO NOT press ENT.

On the PC:

- select the Get test data button. This causes the program to go into a wait state where it waits for the TTR to send the test data. At this time the Stop Getting Data button is enabled so you can cancel waiting for the TTR.

On the TTR:

- press ENT

After receiving all data, communication status window will change message “Waiting for data” to “Received all data successfully.” If uploading close to 200 tests, the upload may take several minutes. Any screen saver that is set for a shorter time than the data transfer time may interrupt the data transfer. In this case either lengthen the screen saver idle time or temporarily disable the screen saver.
The uploaded data is automatically saved to the “C” drive AVOLINK directory as a “.txt” file using the name which appears in the “Test data file name” box.

Viewing test data on PC (View test data window)

You can view the test data by first pressing the “View Test Data” button. A window “Readings Uploaded from TTR” opens
Press the “Display Test Data” button to view all the test data just uploaded from the TTR. At this time all the user entry data can be entered into the fields which are in the upper portion of the window.

Saving this selected data to the database can be accomplished by pressing the “Save to Database” button.Excel or Note Pad can also be used to view this “.txt” dataExcel is assumed to be in its default installation directory.C:\Program Files\Microsoft Office\Office
Notepad is assumed to be in the windows directory.C:\Windows

When you have selected a program, click on the Start Program button to start the program.

User Entry Fields

Prior to printing the test report, the user needs to fill in the transformer information to properly document the test.

- COMPANY, once the database has been saved the company name will reappear when future readings are uploaded. This can be changed at any time.
- SUBSTATION and MANUFACTURER, as the user enters more entries the pull down on the right of these two fields will include all past entries. This assists in consistent data entries.
- TRANSFORMER RATINGS, AMBIENT TEMPERATURE, RELATIVE HUMIDITY, OPERATOR AND COMMENTS / NOTES are entries made every time a printout is to be made.
- MAX % RATIO DEVIATION PERMITTED is a field used to determine whether the ratio deviation is within limits and the results will appear in the PASS/FAIL column of the report.

Printing a Transformer Test Report

To print out a transformer test report:
Selecting the tests to be printed can be accomplished by;

- click the left mouse button and drag the mouse to highlight a group of tests

OR press and hold "Control" then click the left mouse button to highlight multiple tests

- press print button

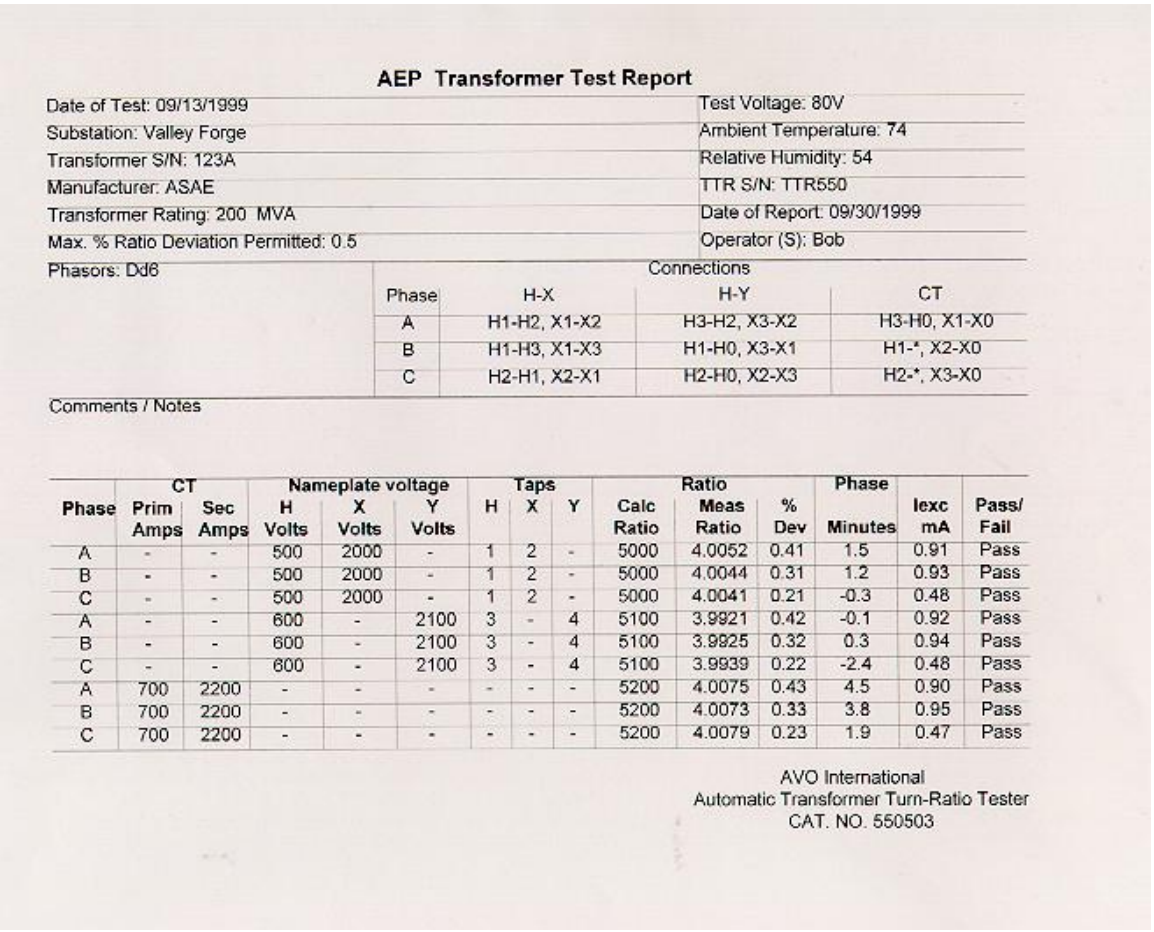

AEP Transformer Test Report

Date of Test: 09/13/1999	Test Voltage: 80V
Substation: Valley Forge	Ambient Temperature: 74
Transformer S/N: 123A	Relative Humidity: 54
Manufacturer: ASAE	TTR S/N: TTR550
Transformer Rating: 200 MVA	Date of Report: 09/30/1999
Max. % Ratio Deviation Permitted: 0.5	Operator (S): Bob

Phasors: Dd6

Connections

Phase	H-X	H-Y	CT
A	H1-H2, X1-X2	H3-H2, X3-X2	H3-H0, X1-X0
B	H1-H3, X1-X3	H1-H0, X3-X1	H1-*, X2-X0
C	H2-H1, X2-X1	H2-H0, X2-X3	H2-*, X3-X0

Comments / Notes

Phase	CT Prim Amps	CT Sec Amps	Nameplate voltage H Volts	Nameplate voltage X Volts	Nameplate voltage Y Volts	Taps H	Taps X	Taps Y	Ratio Calc Ratio	Ratio Meas Ratio	Ratio % Dev	Phase Minutes	Iexc mA	Pass/ Fail
A	-	-	500	2000	-	1	2	-	5000	4.0052	0.41	1.5	0.91	Pass
B	-	-	500	2000	-	1	2	-	5000	4.0044	0.31	1.2	0.93	Pass
C	-	-	500	2000	-	1	2	-	5000	4.0041	0.21	-0.3	0.48	Pass
A	-	-	600	-	2100	3	-	4	5100	3.9921	0.42	-0.1	0.92	Pass
B	-	-	600	-	2100	3	-	4	5100	3.9925	0.32	0.3	0.94	Pass
C	-	-	600	-	2100	3	-	4	5100	3.9939	0.22	-2.4	0.48	Pass
A	700	2200	-	-	-	-	-	-	5200	4.0075	0.43	4.5	0.90	Pass
B	700	2200	-	-	-	-	-	-	5200	4.0073	0.33	3.8	0.95	Pass
C	700	2200	-	-	-	-	-	-	5200	4.0079	0.23	1.9	0.47	Pass

AVO International
Automatic Transformer Turn-Ratio Tester
CAT. NO. 550503

Figure 6-17. Report Printout

Saving Test Results to Database

To save transformer test result to database:

- click the left mouse button and drag the mouse to highlight a group of tests to be saved
- press and hold "Control" then click the left mouse button to highlight multiple tests

The database can be opened with MS ACCESS using the path C:\program files\AVO international\AVOLink.

7 SERVICE

Maintenance

Maintenance should be performed only by qualified persons familiar with the hazards involved with high-voltage test equipment. Read and understand Section 2, Safety, before performing any service.

The TTR test set is sturdily constructed and requires no periodic maintenance. Routine maintenance is all that is required for the TTR test sets. Inspect the cable assemblies occasionally to ensure they are in good condition.

The appearance of the TTR test set can be maintained by occasionally cleaning the case, panel and cable assemblies. Clean the outside of the carrying case with detergent and water. Dry with a clean, dry cloth. Clean the control panel with a cloth dampened with detergent and water. Do not allow water to penetrate panel holes, because damage to components on the underside may result. An all-purpose, household spray cleaner can be used to clean the panel. Polish with a soft, dry cloth, taking care not to scratch the display screen cover. Clean the cables and mating panel receptacles with isopropyl or denatured alcohol applied with a clean cloth.

Fuse Replacement

The electronic circuits in the TTR test set are protected by two mains fuses. Fuse replacement is indicated if the electronic circuits do not function. Refer fuse replacement to qualified personnel. To avoid electric shock and fire hazard, use only the fuses specified in Section 3, Specifications, that are identical in respect to type, voltage rating, and current rating.

WARNING
Before replacing the fuses, disconnect the power input plug from the live power source.

To replace fuse(s), proceed as follows:

1. Disconnect the power cord from the TTR test set.
2. Using a small flathead screwdriver, carefully pry out the fuse holder of the input power module installed on the right side of the TTR test set front panel.
3. Remove and properly dispose of spent fuse(s).
4. Install new fuse(s) making sure to use the type specified in Section 3.
5. Reinstall the fuse holder in its receptacle in the input power module. Connect the power cord to the TTR test set and to an energized power source. If the electronic circuits still do not function properly, contact the factory for service.

Calibration

A complete performance and calibration check should be made at least once every year. This will ensure that the TTR test set is functioning and calibrated properly over the entire measurement range. The BIDDLE® Calibration Standard Cat. No. 550555 or Cat. No. 550055 can be used to make this check.

A simplified self-check can be performed at unity ratio. Proceed as follows:

1. Turn POWER switch off. Using two conductor H and X cables, connect H1 to X1 and H2 to X2.

2. Turn POWER switch on. Select 4 on the main menu screen. When the system setup menu appears, select 4, and then select and enter 80 V. On the same menu select 6.

3. When the main menu appears, select 1.

4. When the quick test setup appears, select 3.

WARNING
Keep the leads, which are energized at high voltage, clear of ground and personnel.

5. Readings on the test result screen should be:

   RATIO: 1.0000 ±0.0010
   PHASE (min) 0.0 ±5
   Iexc (mA): 0.0 to 0.5

6. If needed, perform the test according to steps 1 through 5 for the excitation voltage 40 V, and then for the excitation voltage 8 V. Readings should be the same as in step 5.

Troubleshooting

The Troubleshooting Guide, Table 7-1, is arranged to help you evaluate the reasons for TTR test set malfunction. The table lists possible test set malfunctions which may be encountered during operation and lists possible causes. Electronic circuit repairs should not be attempted in the field. Refer to Repair section. Refer to Section 8 for a list of spare parts.

Table 7-1. Troubleshooting Guide

MALFUNCTION	POSSIBLE CAUSE
Display stays blank after POWER switch is turned on.	• No service power. • Defective line cord. • Defective fuse(s). • CONTRAST potentiometer not adjusted. • Defective display or electronics.
Error message: ANALOG OFFSET VOLTAGE HIGH and/or ANALOG GAIN OUT OF TOLERANCE appears after self-test is complete.	Out of tolerance condition(s) in measurement circuit.
Red TEST VOLTAGE ON lamp does not light on start of testing.	• Defective lamp. • EMERGENCY TEST OFF switch is not released. • Problem in measuring circuit.
One of the following messages appear on the test result screen. • CHECK CONNECTIONS • PHASE A (or B, or C) EXCITATION CURRENT TOO HIGH; • TURNS RATIO TOO LOW, <0.8; or PHASE A (or B, or C) TURNS RATIO TOO HIGH; • CHECK PHASE A (or B, or C) CONNECTIONS, REVERSED; • CHECK PHASE A (or B, or C) POLARITY	• Abnormal operating condition. • Incorrect setting of TRANSFORMER TYPE in the quick test setup or the full test setup 1 menus. • Incorrect connection of leads. • Defective test leads. • Incorrect marking of a transformer. • Problem in test specimen. • Problem in measuring circuit.
RATIO and/or Iexc (mA) readings erratic.	• Defective test leads (open circuit, poor connection). • Severe abnormal transient in service power. • Problem in test specimen (poor connection). • Problem in measuring circuit.
Cannot obtain printout when printer is connected.	• Printer power not turned on. • Printer battery discharged. • Problem in measuring circuitry.

Repair

AVO International offers a complete repair and calibration service and recommends that its customers take advantage of this service in the event of equipment malfunction. Contact your AVO representative for instructions and a return authorization (RA) number. Equipment returned for repair should be shipped prepaid and insured and marked for the attention of the Repair Department. Please indicate all pertinent information including problem symptoms and attempted repairs. The catalog number and serial number of the test set should also be specified. Pack the TTR test set, including all cables, in a carton (original shipping carton if available) with adequate dunnage in accordance with best commercial practice. Seal the carton with waterproof tape.

Ship to: AVO International
Valley Forge Corporate Center
2621 Van Buren Avenue
Norristown, PA 19403

8 ORDERING INFORMATION AND SPARE PARTS LIST

Ordering Information

Item	Cat. No.
Three-phase Transformer Turns Ratio Test Set	
120 V ac ±10%, single phase, 50 ±2 Hz or 60 ±2 Hz, 100 VA	550503
230 V ac ±10%, single phase, 50 ±2 Hz or 60 ±2 Hz, 100 VA	550503-47

Included Accessories

Canvas carrying bag for test leads	30915-211
Power supply cord, 8 ft (2.5 m)	17032-4
Ground lead, 15 ft (4.6 m)	4702-7
Test Leads	
For 3-phase connections, shielded, clip-end terminated	
H winding, 10 ft (3.1 m)	30915-505
X winding, 10 ft (3.1 m)	30915-504
Extensions, shielded	
H winding, 33 ft (10 m)	30915-503
X winding, 33 ft (10 m)	30915-502
Hand-held switch assy for remote operation	30915-220
Software for uploading test results to a PC	35302
RS232 cable for connecting to a PC	35248
Bushing clips	MC7144
Transformer Vector Voltage Diagrams	
for ANSI Standards	35298
for IEC Standards	35299
for AS (Australian) Standards	35300
Instruction manual	AVTM550503

Optional Accessories

Battery/line-powered serial thermal printer	33842
Printer interface cable	35270
Shelf for mounting printer	30915-206
Calibration Standard	550555
Two-way communication software	35303
Inverter with 3 ft (0.91 m) cigarette adapter cord	
12 V dc to 120 V ac, 60 Hz	35271-1
12 V dc to 120 V ac, 50 Hz	35271-3
12 V dc to 230 V ac, 60 Hz	35271-2
12 V dc to 230 V ac, 50 Hz	35271-4
Test Leads	
For 1-phase connections, shielded, clip-end terminated	
H winding, 10 ft (3.1 m)	30915-506
X winding, 10 ft (3.1 m)	30915-507

Spare Parts

Item	AVO Part Number
Case assembly, plastic	30915-204
Condensed operating instructions card	35267
Lens, display	30915-207
Knob, CONTRAST	4690-31
Keypad, 4x4	30915-201
Switch, EMERGENCY TEST OFF	30915-208
TEST VOLTAGE ON bulb	29569
TEST VOLTAGE ON red lens	25301-31
TEST VOLTAGE ON indicator	25301-9
Wing nut, grounding	29911-9
Fuse, 1A/250 V	27708-5
Fuse, 0.5A/250 V	27708-9
Cable, grounding, 15 ft (4.6 m)	4702-7
X cable assembly, extension, 33 ft (10 m)	30915-502
H cable assembly, extension, 33 ft (10 m)	30915-503
X cable assembly, 3 phase, 10 ft (3 m)	30915-504
H cable assembly, 3 phase, 10 ft (3 m)	30915-505
H cable assembly, 1 phase, 10 ft (3 m)	30915-506
X cable assembly, 1 phase, 10 ft (3 m)	30915-507
RS232 cable assembly	35248
Line cord	17032-4
Bushing clip assembly	MC7144
Bag, cable carrying	30915-211

9 GLOSSARY

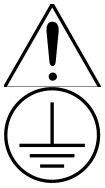

Use only in accordance with instruction manual.

Protective ground (earth) terminal is the wing nut for connecting the test set to earth ground.

ANSI	American National Standards Institute
BCT	Bushing current transformer
CEI/IEC	The initials of the official French name, Commission Electrotechnique Internationale, of the International Electrotechnical Commission.
Centiradian	Phase display option in SYSTEM SETUP screen. 1 centiradian = 0.573 degrees.
CT	Current transformer
LCD	Liquid crystal display
LTC	Load tap changer. A selector switch device used to change transformer taps with the transformer energized and carrying full load.
Safety ground stick	An insulated stick (sometimes called a hot stick) with a hook type electrode connected to ground via an insulated cable. In some discharge sticks, a resistor is connected between the electrode and the ground cable. Both are used to discharge capacitive specimens by providing a low-impedance path to ground. They must be suitable rated for the voltage and capacitance of the specimen to be discharged.
transient	A change in the steady-state condition of voltage or current, or both.
TTR	Transformer turn ratio; a registered trademark of AVO International.
turn ratio	The ratio of the number of turns in a higher voltage winding to that in a lower voltage winding.

This page intentionally left blank

10 WARRANTY

Products supplied by AVO International are warranted against defects in material and workmanship for a period of one year following shipment. Our liability is specifically limited to replacing or repairing, at our option, defective equipment. Equipment returned to the factory must be shipped prepaid and insured. This warranty does not include batteries, lamps ,or other expendable items, where the original manufacturer's warranty shall apply. We make no other warranty. The warranty is void in the event of abuse (failure to follow recommended operating procedures) or failure by the customer to perform specific maintenance as indicated in this manual.

This page intentionally left blank.

11 INDEX

A

Accessories
  Included, 8-1
  Optional, 3-3, 8-1
  Supplied, 3-3
ANSI Transformer Winding Phase Relationship, 5-16
Australian Transformer Winding Phase Relationship, 5-35
Autotransformer, setup for testing, 5-2
AVOLink Program, 6-25–6-28
  Installation, 6-25
  System Requirements, 6-25
  User Entry Fields, 6-27
AVOLINK Program
  Documentation, 6-26
  Installation, 6-25
  Introduction, 6-25
  Printing a Transformer Test Report, 6-28
  Saving Test Results to Database, 6-28
  Transferring readings from TTR to PC, 6-26
  Upgrade Instructions, 6-25
  Usage, 6-26
  Viewing test data on PC, 6-27

B

BCT, setup for testing
  Single-phase Transformer, 5-6
  Three-phase transformers, 5-8
Block Diagram
  Three-phase TTR Test set, 4-1

C

Calibration, 7-2
CAUTION, 2-3
CEI/IEC 76-1, 1993 Transformer Winding Phase Relationship, 5-25
Connections
  Current Transformers, 5-6
  Single-phase, 5-1
  Three-phase Transformers, Two Windings, 5-4
  Three-phase, Transformers, Three-Winding, 5-5

Connections and Vector Voltage Diagrams, 5-12
Connectors, 4-6, 4-7
Controls, Indicators, and Connectors, 4-6
CT, Setup for Testing, 5-2

D

Description, 4-1

E

Electrical specifications, 3-1
EMERGENCY SHUTDOWN, 6-1
Environmental Conditions, 3-2
Error Messages, 6-21

F

Flow Chart , operational, 4-2
Full Test Setup 1 Screen, 6-7
Full Test Setup 2 Screen, 6-9
Full Test Setup 3 Screen, 6-11
Fuse Replacement, 7-1

G

General Information, 1-1
Glossary, 9-1

I

Introduction, 1-1

K

Keypad, 4-6

L

Language Screen, 6-18

M

Main Menu Screen, 6-2
Main Menu Screen After Selection of a Custom Transformer Setting, 6-15
Maintenance, 7-1
Markings, test lead, 5-2, 5-4
Menus, Description of, 6-1

O

Opening Display Screen, 6-1

Operation
General Procedure, 6-1
Principal of, 4-1
Remote Control, 6-22
Operational Flow Chart, 4-2
Optional Accessories, 3-3
Optional Inverter, Use, 6-24
Ordering Information, 8-1

P

Parts, spare, 8-1
Phase A Test Result, 6-13
Principle of Operation, 4-1
Printer, Use With Optional, 6-23
Printout, sample, 6-24

Q

Quick Test Result Screen, Final, 6-6
Quick Test Result Screen, Initial, 6-5
Quick Test Setup Screen, 6-4

R

Recall (or Save) Custom Transformer Settings, 6-20
Receiving Instructions, 1-1
Remote Control Operation, 6-22
Repair, 7-4
Routine Maintenance, 7-1

S

Safety, 2-1
Sample printout of test report, 6-24
Saved data screen, 6-19
Screens
Full Test Setup 1, 6-7
Full Test Setup 2, 6-9
Full Test Setup 3, 6-11
Language, 6-18
Main menu, 6-2
Main Menu Screen After Selection of a Custom Transformer Setting, 6-15
Opening Display, 6-1
Phase A Rest Result, 6-13
Quick Test Result, Final, 6-6
Quick Test Result, Initial, 6-5
Quick Test Setup, 6-4

Recall (or Save) Custom Settings, 6-20
Saved Data, 6-19
System Setup, 6-16
Transformer Test Result, 6-12
Service, 7-4
Setup and Connections, 5-1
Spare Parts, 8-1, 8-2
Specifications, 3-1
Electrical, 3-1
Environmental Conditions, 3-2
System Setup Screen, 6-16

T

Tap Formula, % Difference/Tap, 6-8, 6-10
Test Lead Markings
Single-phase Transformers, 5-2
Three-phase Transformers, 5-4
Transformer Test Result Screens, 6-12
Transformer Winding Phase Relationship
ANSI, 5-16
Australian Standard 2374, Part 4 - 1982, 5-35
CEI/IEC 76-1, 1993, 5-24, 5-25
T-type, 5-11
Troubleshooting, 7-3
Troubleshooting Guide, 7-3
T-Type Transformers, 5-11

U

Use with the Optional Inverter, 6-24
Use with the Optional Printer, 6-23
Using AVOLink Program, 6-25–6-28

V

Vector Voltage Diagrams, 5-12
Voltage regulators, setup for testing, 5-3

W

WARNING, 2-2, 2-3, 5-1, 5-4, 5-5, 5-6, 7-1, 7-2
Warranty, 10-1
Weight, 3-3

AVO INTERNATIONAL

Archcliffe Road
Dover
Kent, CT17 9EN.
England.
Tel: +44 (0) 1304 502100
Fax: +44 (0) 1304 207342

PO Box 9007
Valley Forge
PA 19484-9007
U.S.A.
Tel: +1 (610) 676-8500
Fax: +1 (610) 676-8610

4271 Bronze Way
Dallas
TX 75237-1017
U.S.A.
Tel: +1 (800) 723-2861 (U.S.A. only)
Tel: +1 (214) 330-3203 (International)

MEGGER SARL
29 Allée de Villemomble
93340 Le Raincy
Paris, France
Tel: +33 (1) 43.02.37.54
Fax: +33 (1) 43.02.16.24

This instrument is manufactured in the United Kingdom.
The company reserves the right to change the specification or design without prior notice.

MEGGER is the registered Trade Mark of **AVO INTERNATIONAL LIMITED.** Copyright ©, **AVO INTERNATIONAL LIMITED**

Part No 6172-697 - Edition 1 - Printed in England - 06FF

INSULATION & CONTINUITY TESTERS
MEGGER® BMM500 SERIES

User Guide
Guide d'Utilisateur
Benutzeranleitung
Guía del Usuario

MEGGER®

Contents

Safety Warnings 2
Description 3
Operation 4
- Live Circuit warning 4
- Voltage testing 4
- Auto-shut off 4
- Backlight 4
- Insulation tests 5
- Locking Test Button (ltb) 5
- Polarisation Index Testing 5
- Automatic Discharge 6
- Zeroing of Test Lead Resistance 7
- Possible sources of error 7
- Continuity Bleeper 8
- Resistance Tests (kΩ) 8
- Diode Testing 8
- Voltage Tests (V) 9
- Battery Replacement 10
- Fuse Checking and Replacement 10
- Using the MEGGER SP1 Switched Probe 11

Specification 12

Repair and Warranty 19

Symbols used on the instruments are:

Caution, risk of electric shock.

Caution, refer to User Guide.

Equipment protected throughout by Double Insulation (Class II).

Equipment complies with current EU Directives.

Equipment must not be connected to voltage sources >600V CAT II. Suitable for electrical installations CAT III 300V to Earth

SAFETY WARNINGS

- **Safety Warnings** and **Precautions** must be read and understood before the instrument is used. They **must** be observed during use.
- The circuit under test **must** be de-energised and isolated **before** connections are made except for voltage measurement.
- Circuit connections **must** not be touched during a test.
- After insulation tests, capacitive circuits **must** be allowed to discharge **before** disconnecting the test leads.
- The Live Circuit Warning and Automatic Discharge are additional safety features and **should not** be regarded as a substitute for normal safe working practice.
- Replacement fuses **must** be of the correct type and rating. Failure to fit the correctly rated fuse will result in damage to the instrument in the event of an overload.
- Test leads, including crocodile clips, must be in good order, clean and have no broken or cracked insulation.
- Ensure that hands remain behind guards of probes/clips when testing.
- U.K. Safety Authorities recommend the use of fused test leads when measuring voltage on high energy systems.

NOTE

THE INSTRUMENTS MUST ONLY BE USED BY SUITABLY TRAINED AND COMPETENT PERSONS

Users of this equipment and/or their employers are reminded that Health and Safety Legislation require them to carry out valid risk assessments of all electrical work so as to identify potential sources of electrical danger and risk of electrical injury such as from inadvertent short circuits. Where the assessments show that the risk is significant then the use of fused test leads constructed in accordance with the HSE guidance note GS38 'Electrical Test Equipment for use by Electricians' should be used.

Description

Congratulations on your purchase of a genuine Megger insulation/continuity tester. Megger has over 100 years experience in insulation testing which is reflected in its product designs. Your BMM500 has been carefully developed to address the real needs and benefits of the user.

The **MEGGER BMM500** Series instruments are battery powered Insulation and Continuity testers, with a measurement capability from 0,01Ω Continuity to 10GΩ Insulation.

Offering multi-voltage facilities, the instruments take full advantage of microprocessor technology and feature a large liquid crystal display combining digital and analogue readings. The analogue display has the benefit of indicating trends and fluctuations in readings, while the digital readout gives direct accurate results. The display is also backlit giving clear visibility even in low light conditions.

The BMM500 Series instruments have the unique capability of being able to measure voltages down to a resolution of 0,1mV. This gives the user the option to fit a wide variety of transducers to further enhance the capabilities of the BMM Series instruments, eg temperature or humidity measurement.

A customised connector on the top of the instrument enables the optional **MEGGER SP1** Switched Probe to be used for two handed probe operation.

The 250V, 500V and 1000V ranges can be used to test electrical installations in compliance with BS7671 (16th Edition IEE Wiring Regulations) IEC364 and HD384, since each range has a 1mA minimum test current at the minimum pass values of insulation specified in these documents. Designed to IEC1010-1 the BMM500 Series are protected against connection to a 300V Category III supply. The instruments have a basic accuracy of ±2% at 20°C. The instruments are waterproof and dustproof to IP54. This helps maintain accuracy and ensures maximum reliability in harsh environments.

Operation

Refer to Safety Warnings before using the instrument

Testing is automatically inhibited if:

- An external voltage >55V is present when switched to any insulation range position
- An external voltage >10V is present on all other ranges (excluding **OFF/V**).

The external voltage is indicated on the display, on insulation ranges an audible bleeper will sound if a test is attempted.

Live Circuit Warning

When more than 25V is applied to the terminals in the insulation ranges, the instrument defaults to a voltmeter and gives an audible warning. On all other switch positions except **OFF/V** when approx 10V is applied the default voltmeter will be activated. Testing will be inhibited.

Voltage Testing on High Energy Systems

Use extreme care when using or measuring voltages above 30V, particularly in high energy systems. Fused test leads are available as optional accessories for local situations where increased protection is required.

Auto-shut Off

To conserve battery life, Auto-shut Off (preceded by a series of bleeps) operates after approx. 10 minutes of instrument inactivity on insulation, 5 minutes on all other ranges. If the instrument is switched on whilst holding the key, the Auto shut-off time is extended to 60 minutes. To restore operation after Auto-shut Off, select OFF followed by the required switch position.

Note: *It is recommended that the instrument is switched to the OFF position when not in use.*

Backlight

The backlight is activated by pressing the key. The backlight will remain illuminated for approx. one minute before automatically switching off to conserve battery life,

Operation

alternatively the key can be re-pressed.

Insulation Tests (MΩ) (See fig. 1)
The insulation tests apply a known voltage to the circuit under test and measure the resulting leakage current. The circuit under test **must be** completely de-energised and isolated **before** test connections are made.

Insulation tests are only initiated when the **TEST** button is pressed.

1. Set the range switch to the test voltage required.
2. Connect the test leads, first to the instrument, and then to the isolated item under test.
3. Press the **TEST** button to activate the test voltage. Take the reading.
4. Release the **TEST** button at the end of the test.
5. Any capacitive circuits charged during a test will automatically discharge. If significant voltage remains the voltage warning will occur and the voltage present displayed.
6. Remove the test leads only when no voltage is indicated.

Locking Test Button (ltb)
When it is desired to do a long insulation test, the test can be 'locked on' by pressing the key while the test button is held down. The warning ⚠ will appear on the display and both buttons may be released whilst the test continues. The next press of the test button will terminate the test.

Note: *There is a short delay on the first operation of '1000V' range, each time the range is selected. This is to prevent accidental application of 1kV.*

Polarisation Index Testing
Polarisation Index (PI) is the term applied to the Dielectric Absorption Ratio when resistance values are measured after 1 minute and again after 10 minutes. Polarization Index is then the resistance value after 10 minutes divided by the resistance value after 1 minute. The test can be run at any voltage. More detailed information

Operation

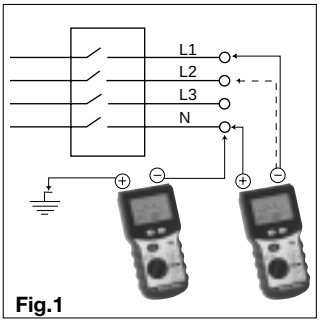

Fig.1

on PI Testing and value assessment can be found in AVO International publications listed in the Accessories page.

Automatic Discharge

When the **TEST** button is released after an insulation test (or re-pressed if ***ltb*** feature is enabled), a 200kΩ load is automatically switched across the terminals to discharge the item under test. Any voltage present will be indicated on the display so that the discharge can be monitored.

Typical Terminal Voltage Characteristics

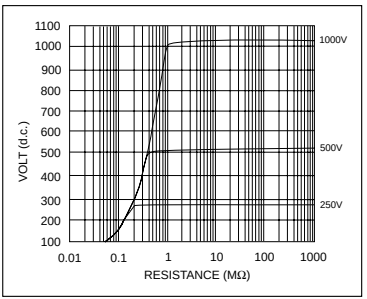

Continuity Testing (Ω) (See fig.2)

The continuity tests are activated when the probes make contact of less than a few kΩ. The tests apply a constant current and measure the resulting volt drop across the circuit under test. The test operates without the need to press the **TEST** button. When the test leads are removed

Operation

the reading will hold for a few seconds and then reset. This range is not suitable for diode testing since the automatic contact detector will not be activated when connected to a diode.

1. Set the selector switch to Ω.
2. Connect the test leads.
3. The test will activate automatically.
4. After the test probes are disconnected, the reading will be held for a few seconds.

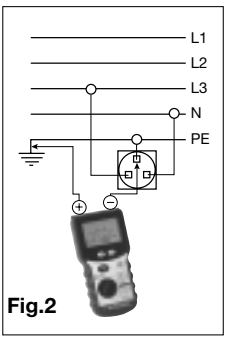

Fig.2

Zeroing of Test Lead Resistance

The resistance of the test leads can be nulled on the continuity range (up to 9,99Ω). The null information is retained in non-volatile memory and so will be remembered when the instrument is switched off.

1. Select the Continuity range.
2. Short the test leads across a known good conductor using prods.
3. When the reading has stabilised, press the **TEST** button. The zero offset symbol will appear.
4. To release the zero offset press the **TEST** button again.

Possible sources of error

Measurements and results can be effected by the following:

- The impedance of operating circuits connected in parallel
- Impedance such as inductors that vary during the measurement
- A poor connection to the circuit under test.

Operation

Continuity Bleeper
The continuity bleeper sounds continuously when a resistance below the threshold level is detected. This can be selected from several values between 2Ω and 3kΩ. To change the level press the button. Short bleeps will sound for values above the threshold but below approx. 3kΩ

1. Set the selector switch to
2. Connect the test leads.

Display (5Ω level selected):	**Audible:**
<5Ω	continuous bleep
<3kΩ	short bleep
>3kΩ	no bleep

To turn off the audible tone and replace it with a visual indication of continuity, press the TEST button whilst switched to the range. will be displayed momentarily and will appear when resistances below the threshold are measured.

Resistance Tests (kΩ)
This is a low voltage (5V) low current (25µA) test for sensitive electronic equipment. It operates in the same way as the continuity ranges.

1. Set the selector switch to kΩ.
2. Connect the test leads.
3. The test will activate automatically.

The resistance range is protected by a high impedance method and therefore if the instrument is connected to a live circuit the fuse will not blow as on the insulation, continuity and buzzer ranges. The instrument will merely indicate the applied over-voltage.

Diode Testing
This range can also be used for diode testing, the positive terminal being the source of the test current. A forward biased semi-conductor junction will typically measure 15 to 30kΩ and the diode symbol is shown on the display. A reverse junction will measure much higher. These features together with the small test

Operation

current and wide measurement range(0,01kΩ to 10000kΩ) make the resistance range very useful for general purpose testing.

Voltage Tests (V)
If >1V a.c. or d.c. is present at the terminals the measured voltage is indicated on the display. The voltage display will function within specification even if the fuse has blown.

If the voltmeter operation is in question, test the voltmeter on a known source.
1. Set the selector switch to V.
2. Connect the test leads.
3. After a short settling time, the reading will be displayed automatically.

Millivolt Tests (mV)
The measured a.c. or d.c. voltage is indicated on the display.
1. Set the selector switch to mV.
2. Select either ac or dc mV using the key.
3. Connect the test leads.
4. After a short settle time, the reading will be displayed automatically.

Measuring Other Parameters
The BMM500 Series can be used to measure numerous quantities from temperature to current to windspeed through the use of mV output probes. Any compatible probe with a known output ratio can be used. eg: a temperature probe with output ratio of 1mV/ºC will cause the display to indicate directly in ºC Certain probes require zeroing, eg windspeed anemometer. The mV zero option described below provides this facility

Zeroing of d.c. mV (no a.c. mV zero facility)
To zero the d.c. mV range, short the leads together in the d.c. mV position, wait for the reading to settle and then press the **TEST** button. Up to 9,9mV can be zeroed on the d.c. mV range. The symbol ⊖ will appear to indicate the zero has been adjusted.

Operation

1. Select the d.c. mV range.
2. Short the test leads together.
3. When the reading has stabilised, press the **TEST** button. The zero offset symbol ⊖ will appear.
4. To release the zero offset press the **TEST** button again.

Battery Replacement

When the low battery symbol ⊣⊢ appears, the cells are nearly exhausted and should be replaced as soon as possible. Use Alkaline cells IEC LR6 (AA) or NiCd/NiMH rechargeable. To install or replace the cells, disconnect the test leads, switch the instrument to **OFF** and loosen the captive screws on the rear of the battery compartment. Remove the cover and disconnect the battery holder from the battery leads. Ensure that the replacement cells are fitted with the correct polarity in accordance with the label in the battery holder. Reconnect the battery holder to the battery leads. Replace and re-secure the battery compartment cover. Remove the cells if the instrument is not going to be used for an extended period of time.

The BMM500 Series incorporates an electronic contact detector to minimise the chance of blowing the fuse even if accidentally applied to a live circuit whilst switched to the continuity range. In the unlikely event of the fuse needing replacement, a spare is located under the battery cover.

Fuse Checking and Replacement

To check the instrument fuse, switch to an insulation range and press the **TEST** button. The symbol ⊣▭⊢ will appear if the fuse is ruptured. To replace the fuse, disconnect the test leads, switch the instrument **OFF** and loosen the captive screws holding the battery compartment cover in place. Remove the cover and replace the fuse. Replace and re-secure the battery compartment cover.

Operation

Using the MEGGER SP1 Switched Probe

Operation: The **Megger SP1** is an accessory for designated **Megger** installation test instruments. When fitted in the specially designed connector, **in place of** the existing 'Low' lead, the **SP1** acts as a remote test button to operate the instrument and as a 'Low' probe. This simplifies instrument control and two-handed probing. The **SP1** is suitable for use with **MEGGER** insulation test instruments up to 1kV output test voltage.

Safety: Meets the safety requirements for double insulation to IEC1010-2-031 (1995), EN61010-2-031 (1995), IEC1010-1 (1995), EN61010-1 (1995) Category III*, 300V phase to earth. The probe is fitted with an internal, non-replaceable fuse, to protect the user should the probe be used accidentally in conjunction with a test lead in the low terminal.

* Relates to transient overvoltage likely to be found in fixed installation wiring.

Do not use the probe if any part of it is damaged.

Specification

(All quoted accuracies are at +20°C.)

Insulation Ranges

Nominal Test Voltage (d.c.):	250V, 500V, 1000V
Test voltage accuracy:	+15% maximum on open circuit
Short circuit current:	< 2 mA
Test Current on load:	1mA at min. pass value of insulation specified in BS7671, HD384 and IEC364, 2mA max.

Accuracy	**Range**	**Full Scale Accuracy**
1000V	10GΩ	±2% ±2digits ±0,2% per GΩ
500V	5GΩ	±2% ±2 digits ±0,4% per GΩ
250V	2GΩ	±2% ±2 digits ±0,8% per GΩ

Note: *Above specifications only apply when high quality silicone leads are being used.*

Measuring Range:	0,01MΩ to 10GΩ (0-100GΩ on analogue scale).
EN61557 Operating range:	0,10MΩ to 1GΩ

Specification

Continuity

Measuring Range:	0,01Ω to 99,9Ω (0-10Ω on analogue scale)
EN61557 Operating range:	0,10Ω to 99,9Ω
Accuracy:	±2% ±2 digits
Open circuit voltage:	5V ±1V
Test current:	210mA ±10mA (0-2Ω)
Zero offset at probe tips:	0,10Ω typical
Lead resistance zeroing:	Up to 9,99Ω
Noise rejection:	1V rms 50/60Hz
Buzzer:	Selectable: operates at less than 2Ω, 5Ω, 20Ω, 50Ω, 200Ω, 500Ω, 3kΩ approx.

Resistance

Measuring Range:	0,01kΩ to 9,99MΩ (0 to 100MΩ on analogue scale)
Accuracy:	±3% ± 2digits
Open circuit voltage:	5V ±1V
Short circuit current:	25µA ±5µA

Specification

Voltage

Measuring Range:	±1V to ±600V (0 to 1000V on analogue scale)
Accuracy:	0-600V d.c. ±2% ±3 digit 0-600V a.c (50/60Hz) ±2% ±3 digits 0-600V 400Hz a.c. ±5% ±3 digits
Input resistance:	approx 200kΩ.
Detector Threshold:	1V

Millivolts

Measuring Range:	±0,1mV to ±1999mV (0 to 1000mV on analogue scale)
Accuracy:	0,1mV to 10mV d.c. or a.c. (50/60Hz) ±2% ±5 digits 10mV to 1999mV d.c. or a.c. (50/60Hz) ±2% ±3 digits 0,1mV to 10mV a.c. (16-460 Hz) ±5% ±7 digits 10mV to 1999mV a.c. (16-460 Hz) ±5% ±5 digits
d.c. milliVolts zeroing:	Up to 9,9mV
Input resistance:	>3MΩ

Specification

Basic and service errors for Insulation and Resistance ranges

The basic error is the maximum inaccuracy of the instrument under ideal conditions, whereas the service error is the maximum inaccuracy taking into effect of battery voltage, temperature, interference, and system voltage and frequency, where applicable. After determining the service error, we can then calculate the measurement range. This is the range of measurement over which the error in service is less than 30% of the reading. Digital instruments are affected by the number of digits error – for example a value 0,10Ω measured with the continuity range may give a display in the range 0,07Ω to 0,13Ω which is a maximum error of 30%. Therefore the measurement range measuring low resistance is 0,10Ω to 99,9Ω. When checking that a measurement does not exceed a limit, the service error needs to be taken into account and these tables enables this to be done quickly and easily. These will guarantee that the value being measured is greater than or less than the limit value specified as appropriate.

Insulation Resistance – MΩ

Limit	Min. Indicated Reading	Limit	Min. Indicated Reading
0,10	0,14	2,00	2,12
0,20	0,25	3,00	3,16
0,30	0,35	4,00	4,20
0,40	0,46	5,00	5,24
0,50	0,56		
0,60	0,66		
0,70	0,77		
0,80	0,87		
0,90	0,98		
1,00	1,08		

Specification

Continuity Resistance – Ω

Limit	Min. Indicated Reading	Limit	Min. Indicated Reading
0,10	0,06	2,00	1,88
0,20	0,15	3,00	2,84
0,30	0,25	4,00	3,80
0,40	0,34	5,00	4,76
0,50	0,44	10,00	9,56
0,60	0,54	20,00	18,8
0,70	0,63	30,00	28,4
0,80	0,73	40,00	38,0
0,90	0,82	50,00	47,6
1,00	0,92	100,00	92,0

SAFETY

The instruments meet the requirements for double insulation to IEC 1010-1 (1995), EN 61010-1 (1995) to Category III*, 300V phase to earth (ground) without the need for separately fused test leads. If required, fused test leads are available as an optional accessory.

* Relates to the transient overvoltages likely to be met in fixed wiring installations.

Complies with the following parts of EN61557, Electrical safety in low voltage systems up to 1000V a.c. and 1500V d.c. – Equipment for testing, measuring or monitoring of protective measures:-

Part 1 – General requirements
Part 2 – Insulation resistance
Part 4 – Resistance of earth connection and equi-potential bonding

FUSE

500mA (F) 600V, 32x 6mm Ceramic HBC 10kA minimum.

E.M.C.

The instruments meet EN 61326-1.

Specification

POWER SUPPLY

Battery Type:	6x1,5V Alkaline cells IEC LR6 type or 1.2V NiCd or NiMH re-chargeable cells.
Battery Life (typical):	2100 5-sec 1kV insulation tests 3200 5-sec 500V insulation tests 4000 5-sec 250V insulation tests 2700 5-sec continuity tests 4700 5-sec kΩ tests

ENVIRONMENTAL CONDITIONS

Operating range:	-10 to +50°C
Operating humidity:	90% RH at 40°C max.
Storage temperature range:	-30 to +70°C
Calibration Temperature:	+20ºC
Maximum altitude:	2000 m
Dust and water protection:	IP54
Temperature coefficient:	<0,1% per °C

WEIGHT:	742g
DIMENSIONS:	110mm x 220mm x 45mm
CLEANING:	Wipe with a clean cloth dampened with soapy water or Isopropyl Alcohol(IPA)

ACCESSORIES

Supplied:	**Part Number**
Test lead set	6220-437
Pouch	6172-124
Switch Test Probe	6220-606 (NA Version only)
Optional:	
Fused lead set, FPK8	6111-218
Switch Test Probe SP1	6220-606
Test Record Cards (Pack of 20)	6111-216
Publications:	
'A Stitch in Time'	AVTM21-P8B
'Testing Electrical Installations'	6172-129

Repair and Warranty

The instrument circuit contains static sensitive devices, and care must be taken in handling the printed circuit board. If the protection of an instrument has been impaired it should not be used, and be sent for repair by suitably trained and qualified personnel. The protection is likely to be impaired if, for example, the instrument shows visible damage, fails to perform the intended measurements, has been subjected to prolonged storage under unfavourable conditions, or has been exposed to severe transport stresses.

New Instruments are Guaranteed for 3 Years from the Date of Purchase by the User.

Note: *Any unauthorized prior repair or adjustment will automatically invalidate the Warranty.*

Instrument Repair and Spare Parts

For service requirements for ***MEGGER***® Instruments contact:-

AVO INTERNATIONAL
Archcliffe Road
Dover
Kent CT17 9EN
England
Tel: +44 (0) 1304 502243
Fax: +44 (0) 1304 207342

or

AVO INTERNATIONAL
Valley Forge Corporate Center
2621 Van Buren Avenue
Norristown, PA 19403
U.S.A.
Tel: +1 (610) 676-8500
Fax: +1 (610) 676-8625

or an approved repair company.

Repair and Warranty

Approved Repair Companies

A number of independent instrument repair companies have been approved for repair work on most ***MEGGER***® instruments, using genuine ***MEGGER***® spare parts. Consult the Appointed Distributor / Agent regarding spare parts, repair facilities and advice on the best course of action to take.

Returning an Instrument for Repair

If returning an instrument to the manufacturer for repair, it should be sent freight pre-paid to the appropriate address. A copy of the Invoice and of the packing note should be sent simultaneously by airmail to expedite clearance through Customs. A repair estimate showing freight return and other charges will be submitted to the sender, if required, before work on the instrument commences.

Table des Materiéres

Avertissements sur la securite 22
Description Generale 23
Fonctionnement 24
Avertissement de circuit sous tension 24
Tests de tension sur des systèmes à haute énergie 24
Arrêt automatique 24
Fond éclairé 25
Tests d'isolation (MΩ) 25
Blocage du Bouton de tests (ltb) 25
Tests de l'indice de polarisation 26
Déchargement automatique 26
Tests de continuité (Ω) 27
Mise à zéro de la résistance des fils de tests 27
Sources possibles d'erreur 27
Alarme de continuité 28
Tests de résistance (kΩ) 28
Tests de diode 28
Tests de tension (V) 29
Tests en millivolts (mV) 29
Mesurer d'autres paramètres 29
Mise à zéro des mV en courant continu (pas de fonction de mise à zéro des mV en courant alternatif) 29
Remplacement de la batterie 30
Vérification et remplacement du fusible 31
Utiliser la sonde à commutateur MEGGER SP1 31
Specifications 32
Reparations et Garantie 38

Les symboles utilisés sur l'instrument sont:

Attention, risque de décharge électrique.

Attention, se reporter au guide de l'utilisateur.

Equipement protégé dans son ensemble par une double isolation (Classe II).

Equipement conforme aux Directives européennes en vigueur.

L'équipement ne doit pas être connecté à des sources de tension > 600V CAT III adaptée aux installations électriques CAT III 300V à la terre.

AVERTISSEMENTS DE SECURITE

- Les avertissements et précautions de sécurité doivent être lues et comprises avant que l'instrument soit utilisé. Ils doivent être suivis pendant l'utilisation.
- L'alimentation du circuit testé doit être coupée et il doit être isolé avant que les connexions soient faites, sauf pour les mesures de tension.
- Les connexions de circuit ne doivent pas être touchées pendant un test.
- Après les tests d'isolation, il faut laisser les circuits à condensateurs se décharger avec de déconnecter les fils de tests.
- L'avertissement de circuit sous tension et le déchargement automatique sont des caractéristiques supplémentaires et ne devront pas être considérés comme des substituts à des pratiques normales de travail en sécurité.
- Les fusibles de remplacement doivent être du bon type et de la bonne résistance. Si l'on installe des fusibles de résistance incorrecte, ceci causera l'endommagement de l'instrument en cas de surcharge.
- Les fils de test, ainsi que les pinces crocodile, doivent être en bon état, propres et de pas présenter une isolation fendue ou cassée.
- Les autorités de sécurité britanniques recommandent l'utilisation de fils de tests pour la mesure de tension sur des systèmes à haute énergie.

REMARQUE:
LES INSTRUMENTS DOIVENT SEULEMENT ÊTRE UTILISÉS PAR DES PERSONNES FORMÉES CONVENABLEMENT ET COMPÉTENTES.

Nous rappelons aux utilisateurs de l'équipement et/ou à leurs employeurs que les lois sur la santé et la sécurité exigent qu'ils effectuent des évaluations de risque valides de tout matériel électrique afin d'identifier toute source potentielle d'un danger électrique et de risque de blessure d'origine électrique telle que les court-circuits. Là où les études montrent que le risque est significatif, alors les fils de tests à fusibles conformément à la note de recommandation HSE GS38 sur l'"Equipement de test électrique pour une utilisation par des électriciens" doivent être utilisés.

Description Generale

Félicitations pour votre achat d'un véritable testeur Megger d'isolement et de continuité. Megger a plus de 100 ans d'expérience des tests d'isolements, ce qui se répercute dans ses concepts de produit. Votre BMM500 a été développé avec attention pour prendre en compte les besoins et avantages réels de l'utilisateur.

Les instruments de la série **BMM500 MEGGER** sont des testeurs de continuité et d'isolation alimentés par batteries, avec une capacité de mesure d'une continuité de 0,01Ω à une isolation de 10GΩ.

Présentant des fonctions multi-voltage, les instruments utilisent pleinement la technologie des microprocesseurs et un grand écran à cristaux liquides associant les affichages analogique et numérique. L'affichage analogique a l'avantage d'indiquer des tendances et des variations de mesures, tandis que l'affichage numérique fournit des résultats directs précis. L'écran est à fond lumineux, ce qui donne une visibilité claire même dans des conditions de basse luminosité.

Les instruments de la série BMM500 ont la capacité unique de pouvoir mesurer des tensions à une précision de 0,1mV. Ceci donne à l'utilisateur la possibilité d'installer une large gamme de transducteurs pour développer davantage les capacités des instruments de la série BMM, par exemple les mesures de température ou d'humidité.

Un connecteur personnalisé sur le dessus de l'instrument permet le recours à une sonde à commutateur optionnelle **MEGGER SP1** pour une utilisation de sonde à deux mains.

Les gammes à 250V, 500V et 1000V peuvent être utilisées pour tester des installations électriques conformes aux normes britanniques BS7671 (Réglementation sur les installations électriques IEEE, 16ème édition) IEC364 et HD384, dans la mesure où chaque gamme a une intensité minimum de 1 mA aux valeurs de passage minimales d'isolation définie dans ces documents.

Conçue suivant les normes IEC1010-1, la série BMM500 est protégée contre la connexion à une alimentation de Catégorie III à 300V. Les instruments ont une précision de base de ±2% à 20°C. Les instruments sont étanches et ne prennent pas la poussière conformément à IP54. Ceci facilite le maintien de la précision et assure une fiabilité maximale dans des environnements difficiles.

Fonctionnement

Se reporter aux avertissements de sécurité avant d'utiliser l'instrument.

Les tests sont automatiquement bloqués si:

- Une tension externe >55V est présente lorsque l'équipement est mis dans toute position de la gamme d'isolation.
- Une tension externe >10V est observée sur toutes les autres gammes (sauf **ARRET**/**V**).

La tension externe est indiquée sur l'écran et sur des gammes d'isolation un signal sonore retentit si on tente d'effectuer un test.

Avertissement de circuit sous tension

Lorsque l'on applique plus de 25V aux bornes dans les gammes d'isolation, l'instrument devient par défaut un voltmètre et émet un avertissement sonore si un test est tenté. Dans toutes les autres positions du commutateur sauf **ARRET**/**V**, lorsque l'on applique plus de 10V le voltmètre par défaut sera activé. Les tests sont bloqués.

Tests de tension sur des systèmes à haute énergie

Prêter une attention extrême lors de l'utilisation ou de la mesure de tensions de plus de 30V, particulièrement dans des systèmes à haute énergie. Des fils de tests à fusibles sont disponibles en tant qu'accessoires optionnels pour des situations locales dans lesquelles une protection plus élevée est nécessaire.

Arrêt automatique

Pour préserver la durée de vie des batteries, un arrêt automatique (précédé d'une série de tonalités) se déclenche après environ 10 minutes d'inactivité de l'instrument en mode isolation, 5 minutes sur toutes les autres gammes. Si l'instrument est allumé en appuyant sur la touche , la période avant l'arrêt automatique est

Fonctionnement

prolongée de 60 minutes. Pour rallumer après un Arrêt automatique, sélectionner ARRET suivi de la position du commutateur nécessaire.

Remarque: *Nous recommandons que l'instrument soit mis en position ARRÊT lorsqu'il n'est pas en service.*

Fond éclairé

L'éclairage en fond est activé en appuyant sur la touche . Le fond éclairé fond restera allumé environ une minute avant de s'éteindre automatiquement pour préserver la durée de vie de la batterie. Il est également possible de ré appuyer sur la touche .

Tests d'isolation (MΩ) (voir fig. 1)

Les tests d'isolation appliquent une tension connue à un circuit testé et mesurent l'intensité de fuite qui en résulte. Le circuit testé doit être complètement désactivé et isolé avec que les connexions de tests soient faites. Les tests d'isolation ne sont lancés que lorsque l'on appuie sur le bouton **TEST**.

1. Placer le commutateur de gamme sur la tension de test nécessaire.
2. Connecter les fils de test, d'abord à l'instrument, et ensuite à l'élément isolé à tester.
3. Appuyer sur le bouton **TEST** pour activer la tension de test, relever la mesure lue.
4. Relâcher le bouton de **TEST** à la fin du test. La dernière lecture restera sur l'écran.
5. Tous les circuits à condensateurs chargés pendant un test se déchargeront automatiquement. Si des tensions significatives persistent, l'alarme de tension se déclenchera et les tensions relevées s'afficheront.
6. Retirer les fils de test seulement lorsque aucune tension n'est indiquée.

Blocage du Bouton de tests (ltb)

Lorsque l'on souhaite effectuer un long test d'isolation, le test peut être "bloqué" en appuyant sur la touche tout en maintenant le bouton de test enfoncé. L'avertissement ⚠ apparaîtra sur l'écran et les deux boutons pourront être relâchés pendant que le test se poursuit. Appuyer sur le bouton de test une fois de plus terminera le test.

Remarque: *Il y a un court délai lors de la première utilisation de la gamme '1000V', à chaque fois que la gamme est sélectionnée. Ceci vise à d'empêcher l'application accidentelle d'1KV.*

Fonctionnement

Tests de l'indice de polarisation

L'indice de polarisation (IP) est un terme appliqué au rapport d'absorption diélectrique lorsque les valeurs de résistance sont mesurées après 1 minute puis de nouveau après 10 minutes. L'indice de polarisation est alors la valeur de résistance après 10 minutes divisée par la valeur de résistance après 1 minute. Le test peut être effectué pour n'importe quelle tension. Des informations plus détaillées sur les tests d'IP et l'analyse des valeurs sont disponibles dans les publicatio

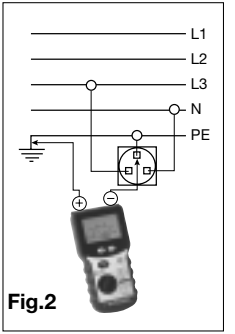

Fig.2

Blocage du Bouton de tests (ltb)ns internationales AVO énumérées dans les pages d'accessoires.

Déchargement automatique

Lorsque le bouton de TEST est relâché après un test d'isolation (ou renfoncé si la fonction ltb est activée), une charge de 200kΩ est automatiquement transférée à travers les bornes pour décharger l'élément sous test. Toute tension présente sera indiquée sur l'écran de sorte que le déchargement puisse être contrôlé.

CARACTÉRISTIQUES NORMALES DE TENSION AUX BORNES

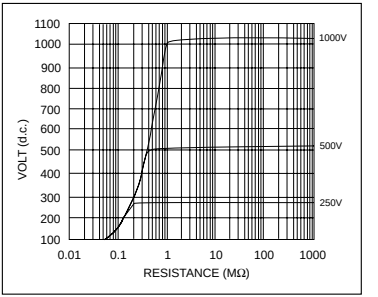

Fonctionnement

Tests de continuité (Ω) (voir fig.2)

Les tests de continuité sont activés lorsque les sondes entrent en contact à moins de quelques kΩ. Le test fonctionne sans avoir besoin d'appuyer sur le bouton **TEST**. Lorsque les fils de test sont retirés, l'affichage se maintient pendant quelques secondes puis est remis à zéro. Cette gamme n'est pas adaptée aux tests de diodes puisque le détecteur de contact automatique ne sera pas activé lors de la connexion avec une diode.

1. Mettre le commutateur de sélection sur Ω.
2. Connecter les fils de tests.
3. Le test se déclenchera automatiquement.
4. Une fois que les sondes de tests sont déconnectées, l'affichage se maintient quelques secondes.

Mise à zéro de la résistance des fils de tests

La résistance des fils de tests peut être mise à zéro sur la gamme de continuité (jusqu'à 9,99Ω). L'information de mise à zéro est conservée dans la mémoire non-volatile et sera donc sauvegardée lorsque l'instrument sera éteint.

1. Sélectionner la gamme continuité.
2. Court-circuiter les fils de test à travers un bon conducteur en utilisant les poussoirs.
3. Lorsque la lecture sera stabilisée, appuyer sur le bouton de **TEST**. Le symbole de compensation à zéro va apparaître.
4. Pour libérer la compensation du zéro, appuyer de nouveau sur le bouton **TEST**.

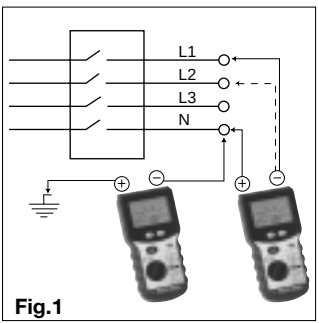

Fig.1

Fonctionnement

Sources possibles d'erreur

Les mesures et les résultats peuvent être affectés par:

- L'impédance de circuits en fonctionnement connectés en parallèle
- L'impédance telle que celle des inducteurs qui varie pendant les mesures
- Une mauvaise connexion au circuit testé.

Alarme de continuité

Le bipeur de continuité retentit en continu quand une résistance inférieure au seuil est détectée. Ce seuil peut être sélectionné parmi plusieurs valeurs entre 2Ω et 3kΩ. Pour changer de seuil, appuyer sur le bouton . Des bips courts sonneront pour des valeurs supérieures au seuil mais inférieures à environ 3kΩ.

1. Placer le commutateur de sélection sur
2. Connecter les fils de tests.

Affichage (seuil de 5Ω) :	**Audible :**
<5Ω	bip continu
<3kΩ	bip court
>3kΩ	pas de signal

Tests de résistance (kΩ)

C'est un test à basse tension (5V) et à basse intensité (25µA) pour un équipement électronique sensible. Il fonctionne de la même manière que les gammes de continuité.

1. Placer le commutateur de sélection sur kΩ.
2. Connecter les fils de tests.
3. Le test se lancera automatiquement.

La gamme de résistance est protégée par une méthode à haute impédance, donc si l'instrument est connecté à un circuit sous tension, le fusible ne grillera pas comme sur les gammes d'isolation, de continuité et de sonnerie. L'instrument indiquera simplement la surtension appliquée.

Tests de diode

Cette gamme peut également être utilisée pour tester des diodes, la borne positive étant la source du courant de test. Le symbole de diode ⊣|⊢ apparaîtra si la tension présente entre les bornes est dans les limites de jonction du semi-conducteur. Les caractéristiques ainsi que la petite intensité de test et la large gamme de mesure (de 0,01KΩ à 10000kΩ) rendent la gamme de résistance très utile pour des tests à des fins générales.

Fonctionnement

Tests de tension (V)

Si un courant alternatif ou continu de >1V est observé aux bornes, la tension mesurée est indiquée sur l'écran. L'affichage de tension fonctionnera conformément aux spécifications même si le fusible grille. Si le fonctionnement du voltmètre est en question, tester le voltmètre sur une source connue.

1. Mettre le commutateur de sélection sur V.
2. Connecter les fils de tests.
3. Après un bref instant de mise au point, la lecture appar aîtra automatiquement.

Pour visualiser la fréquence du courant alternatif en cours de mesure, appuyer sur la touche 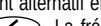 . La fréquence s'affichera dans la fourchette 16Hz-460Hz. Pour visualiser la tension du courant alternatif appuyer sur la touche de nouveau.

Tests en millivolts (mV)

La tension de courant alternatif ou continu est indiquée sur l'écran.

1. Placer le commutateur de sélection sur mV.
2. Sélectionner mV c.a ou c.c en utilisant la touche .
3. Connecter les fils de tests.
4. Après un bref instant de mise au point, la lecture apparaîtra automatiquement.

Mesurer d'autres paramètres

La série BMM500 peut être utilisée pour mesurer de nombreuses grandeurs, de la température à la tension en passant par la vitesse du vent à l'aide de sondes à sortie en mV. Toute sonde ayant un rapport de sortie connu peut être utilisée. Par exemple : une sonde de température avec un rapport de sortie de 1mV/ºC provoquera l'affichage directement en ºC

Certaines sondes nécessitent une mise à zéro, par exemple les anémomètres pour la mesure de la vitesse du vent. L'option zéro mV décrite ci-dessous offre cette possibilité.

Mise à zéro des mV en courant continu (pas de fonction de mise à zéro des mV en courant alternatif)

Pour remettre la gamme de mV en courant continu à zéro, raccorder les fils ensemble dans la position mV courant continu, attendre que la lecture s'établisse puis appuyer sur le bouton **TEST**. On peut remettre à zéro jusqu'à 9,9mV sur

Fonctionnement

la gamme de mV en courant continu. Le symbole ⊖ apparaîtra pour indiquer que le zéro a été réglé.

1. Sélectionner la gamme de mV en courant continu.
2. Raccorder les fils de tests ensemble.
3. Lorsque l'affichage s'est stabilisé, appuyer sur le bouton de **TEST**. Le symbole de compensation du zéro ⊖ apparaîtra.
4. Pour libérer la compensation du zéro, appuyer sur le bouton **TEST**.

Remplacement de la batterie

Lorsqu'un symbole de batterie à plat ⊣⊢ apparaît, les piles sont presque épuisées et devront être remplacées dès que possible. Utiliser des piles alcalines IEC LR6 (AA) ou NiCd rechargeables. Pour installer ou remplacer les piles, déconnecter les fils de tests, mettre l'instrument sur **ARRET** et desserrer les vis captives à l'arrière du compartiment des batteries. Retirer le couvercle et déconnecter le porte-batteries des fils de batteries. S'assurer que les piles de remplacement sont installées avec la bonne polarité conformément à l'étiquette du porte-batteries. Rebrancher le porte-batteries aux fils de la batterie. Replacer et rebloquer le couvercle du compartiment des batteries. Retirer les piles si l'instrument ne doit pas être utilisé pendant une longue période.

La série BMM500 comprend un détecteur de contact électronique pour minimiser la possibilité de griller un fusible même en cas d'application accidentelle à un circuit sous tension tandis que l'appareil est positionné sur la gamme de continuité. Dans le cas peu probable d'un fusible nécessitant un remplacement, un fusible de rechange est situé sous le couvercle des piles.

Fonctionnement

Vérification et remplacement du fusible

Pour vérifier le fusible de l'instrument, se mettre sur une gamme d'isolation et appuyer sur le bouton de **TEST**. Le symbole ⊣⊟⊢ apparaîtra si le fusible est fondu. Pour remplacer le fusible, déconnecter les fils de tests, mettre l'instrument sur **ARRET** et desserrer les vis captives maintenant en place le couvercle du compartiment des batteries. Retirer le couvercle et remplacer le fusible. Replacer et rebloquer le couvercle du compartiment des batteries.

Utiliser la sonde à commutateur MEGGER SP1

Fonctionnement: La **MEGGER SP1** est un accessoire pour les instruments de tests d'installations conçus par **MEGGER**. Lorsqu'elle est installée sur un connecteur spécialement conçu, ***à la place du*** fil "Bas" existant, la **SP1** agit comme un bouton de test à distance pour faire fonctionner l'instrument comme une sonde basse. Ceci simplifie le contrôle de l'instrument et le sondage à deux mains. La **SP1** convient à l'utilisation avec les instruments de tests d'isolation **MEGGER** jusqu'à 1KV de tension de test de sortie.

Sécurité: Elle répond aux exigences de sécurité pour la double isolation conformément aux normes IEC1010-2-031 (1995), EN61010-2-031 (1995), IEC1010-1 (1995), EN61010-1 (1995) Catégorie III*, 300V de la phase à la terre et 500V de phase à phase. La sonde est équipée d'un fusible interne non remplaçable pour protéger l'utilisateur si a sonde devait être utilisée accidentellement en conjonction avec un fil de test dans la borne basse.

* Cela se rapporte à une surtension parasite susceptible d'être observée dans les câblages d'installation fixe.

⚠ **Ne pas utiliser la sonde si une quelconque partie en est endommagée.**

Specifications

(Toutes les précisions indiquées sont à +20°C.)

Gammes d'isolation

Nominal Test Voltage(d.c.):	250V, 500V, 1000V
Précision de tension de test:	+15% maximum sur un circuit ouvert
Intensité de court circuit:	< 2 mA
Intensité de test au chargement:	1mA à la valeur de passage mini. d'isolation définie dans les normes BS7671, HD384 et IEC 364, 2mA maxi.

Gamme	Pleine échelle	Précision
1000V	10GΩ	±2% ±2 chiffres ±0,2% par GΩ
500V	50GΩ	±2% ±2 chiffres ±0,4% par GΩ
250V	2GΩ	±2% ±2 chiffres ±0,8% par GΩ

Remarque: *Les spécifications ci-dessus s'appliquent seulement lorsque des fils au silicone de haute qualité sont utilisés.*

Gamme de mesure:	de 0,01MΩ à10GΩ (de 0 à 100GΩ sur l'échelle analogique).
Gamme de fonctionnement à la norme EN61557:	de 0,10Ω à 1GΩ

Continuité

Gamme de mesure:	de 0,01Ω à 99,9Ω (de 0 à 10Ω sur l'échelle analogique)
Gamme de fonctionnement à la norme EN61557:	de 0,10Ω à 99,9Ω

Specifications

Précision:	±2% ±2 chiffres
Tension de circuit ouvert:	5V ±1V
Intensité de test :	210mA ±10mA (de 0 à 2Ω)
Compensation du zéro aux sondes:	0,10Ω en général
Mise à zéro de la résistance des fils:	Jusqu'à 9,99Ω
Rejet de bruit :	1V rms 50/60Hz
Alarme :	Sélectionnable – Fonctionne à moins de 2Ω, 5Ω, 20Ω, 50Ω, 200Ω, 500Ω, 3kΩ (environ).

Résistance

Gamme de mesures:	de 0,01Ω à 9,99Ω (de 0 à 100MΩ sur l'échelle analogique)
Précision:	±3% ±2 chiffres
Tension de circuit ouvert:	5V ±1V
Intensité de court circuit:	25µA ±5µA

Tension

Gamme de mesure:	de ±1V à ±500V (de 0 à 1000V sur l'échelle analogique)
Précision:	0-500V c.c. ±2% ±3 chiffres 0-500V c.a. (50/60Hz) 2% ±3 chiffres 0-500V 400Hz c.a. ±5% ±3 chiffres
Résistance d'entrée:	environ 200kΩ.
Seuil du détecteur:	1V

Specifications

Millivolts

Gamme de mesures:	de ±0,1mV à ±1999mV (de 0 à 1000mV sur l'échelle analogique)
Précision:	0,1mV à 10mV c.c. ou c.a. (50/60 Hz) ±2% ±5 chiffres 10mV à 1999mV c.c. ou c.a. (50/60 Hz) ±2% ±3 chiffres 0,1mV à 10mV c.a. (16-460 Hz) ±5% ±7 chiffres 10mV à 1999mV c.a. (16-460 Hz) ±5% ±5 chiffres
Mise à zéro des millivolts en c.c.:	Jusqu'à 9,9mV
Résistance d'entrée:	>3MΩ

Erreurs de base et de service pour les gammes d'isolation et de résistance.

L'erreur de base est l'imprécision maximale de l'instrument dans des conditions idéales, tandis que l'erreur de service est l'imprécision maximale en prenant en compte l'effet de la tension de la batterie, la température, les interférences, là où elles s'appliquent. Après avoir défini l'erreur de service, nous pouvons calculer la gamme de mesures. C'est la gamme des mesures sur lesquelles l'erreur de service est inférieure à 30% de la lecture. Les instruments numériques sont affectés par le nombre d'erreurs de chiffres – par exemple une valeur de 0,10Ω mesurée avec la gamme de continuité peut donner un affichage dans la fourchette de 0,07Ω à 0,13Ω ce qui est une erreur maximale de 30%. De ce fait la gamme de mesures mesurant une basse résistance va de 0,10Ω à 99,9Ω. Lorsque l'on vérifie qu'une mesure ne dépasse une limite, l'erreur de service doit être prise en compte et ces tableaux permettent de le faire rapidement et facilement. Ces derniers garantissent que la valeur mesurée est plus ou moins élevée que la valeur limite définie comme convenable.

Specifications

Resistance d'isolation – MΩ

Limite	Lecture mini. indiquée	Limite	Lecture mini. indiquée
0,10	0,14	2,00	2,12
0,20	0,25	3,00	3,16
0,30	0,35	4,00	4,20
0,40	0,46	5,00	5,24
0,50	0,56		
0,60	0,66		
0,70	0,77		
0,80	0,87		
0,90	0,98		
1,00	1,08		

Resistance de continuité – Ω

Limite	Lecture maxi. indiquée	Limite	Lecture maxi. indiquée
0,10	0,06	2,00	1,88
0,20	0,15	3,00	2,84
0,30	0,25	4,00	3,80
0,40	0,34	5,00	4,76
0,50	0,44	10,00	9,56
0,60	0,54	20,00	18,8
0,70	0,63	30,00	28,4
0,80	0,73	40,00	38,0
0,90	0,82	50,00	47,6
1,00	0,92	100,00	92,0

Specifications

SECURITE

L'instrument répond aux exigences de sécurité pour la double isolation conformément aux normes IEC1010-2-031 (1995), EN61010-2-031 (1995), Catégorie III*, de 300V de la phase à la terre et de 440V de phase à phase, sans besoin de fils de tests à fusible distincts. Si nécessaire, des fils de tests à fusibles sont disponibles en tant qu'accessoires optionnels.

* Cela concerne une surtension de passage susceptible d'être observée dans le câblage d'une l'installation fixe.

L'appareil est conforme aux parties suivantes de la norme EN61557, Sécurité électrique dans les réseaux de distribution basse tension jusqu'à 1000V alternatif et 1500V continu. – Dispositifs de contrôle, de mesures et de surveillance des mesures de protection:

Partie 1 - Exigences générales
Partie 2 - Résistance d'isolation
Partie 4 - Résistance de la connexion à la terre et liaison équipotentielle

FUSIBLE

500mA (F) 500V, 32x 6mm Céramique HBC 10kA minimum.

C.E.M.

L'instrument est conforme aux normes EN 50081-1 et EN 50082-1 (1992).

ALIMENTATION ELECTRIQUE

Type de batterie:	Piles alcalines 6x1,5V de type IEC LR6 ou piles rechargeables 1,2V NiCd
Durée de vie des batteries (en général):	2100 tests d'isolation de 5 secondes à 1KV 3200 tests d'isolation de 5 secondes à 500V 4000 tests d'isolation de 5 secondes à 250V 2700 tests de continuité de 5 secondes 4700 tests de kΩ de 5 secondes

Specifications

CONDITIONS ENVIRONNEMENTALES	
Fourchette de fonctionnement	de -5 à +40°C
Humidité de fonctionnement	90% d'humidité relative à 40°C maxi.
Fourchette de températures de Stockage	de -25 à +65°C
Température de réglage	+20°C
Altitude maximale	2000m
Protection contre la poussière et l'eau	IP54
Coefficient de température	<0,1% par °C
POIDS:	742g
DIMENSIONS:	110mm x 220mm x 45mm
NETTOYAGE:	Frotter avec un chiffon propre humecté avec de l'eau savonneuse ou de l'alcool Isopropyle (IPA)

ACCESSOIRES

Fourni:
Numéro de pièce
Jeu de fils de tests
6220-437
Mallette de tests portable-

En option:
Jeu de fils à fusibles, FPK8
6111-218
Sonde de tests à commutateur SP1
6220-606
Cartes d'enregistrement de tests (paquet de 20)
6111-216

Publications:
'A Stitch in Time'
AVTM21-P8B
'Testing Electrical Installations'
6172-129

Reparations et Garantie

Le circuit de l'instrument contient des composants sensibles à l'électricité statique, et il faut manipuler les plaques de circuits imprimés avec précaution. Si la protection d'un instrument s'est détériorée, il ne devra pas être utilisé, et être envoyé pour des réparations auprès d'un personnel qualifié et formé comme il convient. La protection sera probablement atténuée si, par exemple, l'instrument est clairement endommagé, s'il ne peut effectuer les mesures voulues, ou s'il a été soumis à un stockage dans un environnement défavorable, ou s'il a été exposé à des efforts importants pendant le transport.

Les nouveaux instruments sont garantis pour 3 ans à partir de la date d'achat par l'utilisateur.

Remarque: *Toute réparation ou réglage préalablement non autorisé annulera automatiquement la garantie.*

Réparation des instruments et pièces détachées

Concernant vos besoins de maintenance d'instruments ***MEGGER***®, contacter:

AVO INTERNATIONAL or	**MEGGER SARL**
Archcliffe Road	29 Allée de Villemomble
Dover	93340 Le Raincy
Kent CT17 9EN	Paris
England	France.
Tel: +44 (0) 1304 502243	Tel: +33 (1) 43.02.37.54
Fax: +44 (0) 1304 207342	Fax: +33 (1) 43.02.16.24

ou une entreprise de réparations agréée.

Entreprises de réparations agréées

Un certain nombre d'entreprises de réparation d'instruments indépendantes ont été approuvées pour des travaux de réparations sur la plupart des instruments ***MEGGER***®, à l'aide de pièces détachées ***MEGGER***® véritables. Se reporter à la liste des Distributeurs/Agents désignés concernant les pièces détachées, les équipements de réparations et des recommandations sur la meilleure marche à suivre.

Reparations et Garantie

Renvoyer un instrument pour réparation

Si vous renvoyez un instrument au fabricant pour des réparations, il doit être envoyé en port payé à l'adresse qui convient. Une copie de la facture et de la note d'emballage doivent être envoyées en même temps par poste par avion afin d'expédier le dédouanement aux Douanes. Un devis des réparations montrant le retour de fret et les autres frais sera présenté à l'envoyeur, s'il le souhaite, avant que le travail sur l'instrument commence.

Inhaltsverzeichnis

Sicherheitshinweise 41
Allgemeine Beschreibung 42
Bedienung 43
Warnung bei stromführenden Stromkreisen 43
Spannungsprüfung bei Hochenergieanlagen 43
Automatisches Ausschalten 43
Hintergrundbeleuchtung 43
Isolationsprüfungen (MΩ) 44
Einrastende Prüftaste (Itb) 44
Prüfung des Polarisationsindex 44
Automatische Entladung 45
Nullen des Prüfkabelwiderstands 46
Mögliche Fehlerquellen 46
Durchgangspiepser 47
Widerstandsprüfungen (kΩ) 47
Diodenprüfung 47
Spannungsprüfungen (V) 47
Millivoltprüfungen (mV) 48
Nullen von d.c. mV (keine Funktion zum Nullen von a.c. mV) 48
Ersetzen der Batterie 49
Kontrollieren und Ersetzen von Sicherungen 49
Verwenden der Geschalteten Sonde MEGGER SP1 49
Technische Daten 51
Reparator und Garantie 57

Auf dem Gerät werden die folgenden Symbole verwendet:

Vorsicht, Gefahr eines elektrischen Schlags

Vorsicht, Lesen Sie bitte in der Benutzeranleitung nach.

Das Gerät ist durchwegs durch doppelte Isolation geschützt (Klasse II).

Das Gerät entspricht den aktuellen EU-Richtlinien.

Geräte dürfen nicht an Spannungsquellen > 600V CAT III für elektrische Installationen angeschlossen werden. CAT III 300V zu Erde.

SICHERHEITSHINWEISE

- Die Sicherheitshinweise und Vorsichtsmaßnahmen müssen gelesen und verstanden werden, bevor das Gerät benutzt wird. Sie müssen während des Gebrauchs befolgt werden..
- Der zu prüfende Stromkreis muß, außer für die Spannungsmessung, stromlos geschaltet und abgetrennt werden, bevor die Anschlüsse hergestellt werden.
- Während der Prüfung dürfen keine Schaltverbindungen berührt werden.
- Nach Isolationsprüfungen muß gewartet werden, bis sich kapazitive Stromkreise entladen haben, bevor die Prüfkabel abgetrennt werden.
- Die 'Warnung bei stromführenden Stromkreisen' und die 'Automatische Entladung' sind zusätzliche Sicherheitsfunktionen und sind nicht als Ersatz für eine normale sichere Arbeitspraxis zu betrachten.
- Austauschsicherungen müssen von der richtigen Art sein und den richtigen Nennstrom haben. Das Einsetzen von Sicherungen mit dem falschen Nennstrom führt im Fall einer Überlast zur Beschädigung des Geräts.
- Prüfkabel, einschließlich Krokodilklemmen, müssen in gutem Zustand und sauber sein, und die Isolation darf keine Risse oder Sprünge haben.
- Die britischen Sicherheitsbehörden empfehlen bei der Messung von Spannungen an Hochenergieanlagen die Verwendung von abgesicherten Prüfkabeln.

HINWEIS:

DIE GERÄTE DÜRFEN NUR VON ENTSPRECHEND AUSGEBILDETEN UND FACHKUNDIGEN PERSONEN VERWENDET WERDEN.

Die Benutzer dieser Geräte bzw. deren Arbeitgeber werden daran erinnert, daß die Gesetzgebung über Gesundheit und Sicherheit die Durchführung von gültigen Risikobewertungen aller elektrischer Arbeiten verlangt, um potentielle Quellen elektrischer Gefahren und das Risiko elektrischer Verletzungen, z.B. infolge unbeabsichtigter Kurzschlüsse, zu identifizieren. Wenn die Bewertung ergibt, daß das Risiko erheblich ist, sind abgesicherte, unter Einhaltung der HSE-Richtlinie GS38 'Electrical Test Equipment for use by Electricians' (Elektrische Prüfgeräte für die Verwendung durch Elektriker') hergestellte Prüfkabel zu verwenden.

Allgemeine Beschreibung

Wir gratulieren Ihnen zum Erwerb eines einzigartigen Megger Isolierungs-/Durchgangsprüfers. Megger haben mehr als 100 Jahre Erfahrung mit dem Isolierungsprüfen, und dies wird in unserem Produktdesign reflektiert. Ihr BMM500 wurde sorgfältig entwickelt, um die wirklichen Anforderungen des Benutzers zu erfüllen und seine Arbeit zu unterstützen.

Die Geräte der Reihe **MEGGER BMM500** sind batteriebetriebene Isolations- und Durchgangsprüfgeräte mit einer Meßfähigkeit von 0,01Ω Durchgang bis 10GΩ Isolation.

Die Geräte bieten Mehrfachspannungseinrichtungen, bedienen sich voll der Mikroprozessortechnologie und haben eine grofle Flüssigkristallanzeige, auf der digitale und analoge Anzeigen kombiniert sind. Die Analoganzeige hat den Vorteil, daß sie auf Trends und Schwankungen der Ablesewerte hinweist, während die digitale Anzeige direkte und genaue Ergebnisse liefert. Die Anzeige ist außerdem hintergrundbeleuchtet und ist selbst bei schlechten Lichtverhältnissen deutlich sichtbar.

Die Geräte der Reihe BMM500 haben die einmalige Fähigkeit, Spannungen bis zu einer Auflösung von 0,1mV zu messen. Dadurch erhält der Benutzer die Option, eine große Auswahl von Meßwandlern anzuschließen, mit denen die Fähigkeiten des Geräts der Reihe BMM beispielsweise für die Temperatur- oder Feuchtigkeitsmessung noch erweitert werden.

Ein speziell angefertigter Stecker oben am Gerät ermöglicht die Verwendung der als Sonderzubehör erhältlichen geschalteten Sonde **MEGGER SP1** für die zweihändigen Bedienung der Sonde.

Die Bereiche 250V, 500V und 1000V können zum Prüfen von elektrischen Installationen unter Einhaltung von BS7671 (16. Ausgabe der IEEE-Verdrahtungsvorschriften), IEC364 und HD384 verwendet werden, da jeder Bereich bei den in diesen Dokumenten vorgeschriebenen Mindestdurchgangswerten der Isolation einen Mindestprüfstrom von 1 mA hat.

Die Reihe BMM500 ist nach IEC1010-1 ausgelegt und gegen die Verbindung mit einer 300V-Versorgung der Kategorie III abgesichert. Die Geräte haben eine Grundgenauigkeit von ±2% bei 20°C. Die Geräte sind nach IP54 wasserdicht und staubdicht. Dies trägt zum Beibehalten der Genauigkeit bei und garantiert maximale Zuverlässigkeit in rauhen Umgebungen.

Bedienung

Lesen Sie die Sicherheitshinweise, bevor Sie das Gerät benutzen.

Die Prüfung wird automatisch verhindert, wenn:

- Eine externe Spannung von >55V anliegt, wenn das Gerät in eine beliebige Isolationsbereichstellung gestellt ist..
- Eine externe Spannung von >10V bei allen anderen Bereichen anliegt (außer **OFF/V**).

Die externe Spannung wird auf der Anzeige angezeigt, bei Isolationsbereichen ertönt ein Piepser, wenn versucht wird, eine Prüfung auszuführen.

Warnung bei stromführenden Stromkreisen

Wenn in den Isolationsbereichen mehr als 25V an die Anschlüsse angelegt wird, wird das Gerät als Vorgabe zu einem Voltmeter und gibt eine hörbare Warnung, falls versucht wird, eine Prüfung auszuführen. Bei allen anderen Schalterstellungen außer **OFF/V** wird das Vorgabevoltmeter aktiviert, wenn mehr als 10V angelegt werden. Die Prüfung wird verhindert.

Spannungsprüfung bei Hochenergieanlagen

Seien Sie äußerst vorsichtig, wenn Sie Spannungen über 30V messen, insbesondere in Hochenergieanlagen. Abgesicherte Prüfkabel sind für örtliche Situationen, in denen erhöhter Schutz benötigt wird, als Sonderzubehör erhältlich.

Automatisches Ausschalten

Zum Schonen der Batterie schaltet das Gerät (nachdem zuvor eine Reihe von Piepstönen ertönt) nach ca. 10 Minuten der Untätigkeit bei Isolationsprüfungen ab, nach ca. 5 Minuten bei allen anderen Bereichen. Wenn beim Einschalten des Geräts die Taste gedrückt wird, wird die Zeit bis zum Ausschalten auf 60 Minuten verlängert. Stellen Sie den Schalter in die Stellung **OFF** (**AUS**) und dann in die gewünschte Stellung, um nach einer automatischen Ausschaltung den Betrieb wiederherzustellen.

Hinweis: *Es wird empfohlen, das Gerät auszuschalten (Schalterstellung OFF), wenn es nicht in Gebrauch ist.*

Hintergrundbeleuchtung

Die Hintergrundbeleuchtung wird durch Drücken der Taste aktiviert. Die Hintergrundbeleuchtung bleibt während ca. 1 Minute an, und schaltet dann automatisch aus, um die Batterie zu schonen. Alternativ kann die Taste

Bedienung

auch nochmals gedrückt werden.

Isolationsprüfungen (MΩ) (Siehe Abb.1)

Bei den Isolationsprüfungen wird eine bekannte Spannung an den zu prüfenden Stromkreis angelegt und der daraus resultierende Kriechstrom gemessen. Der zu prüfende Stromkreis mufl vollständig stromlos geschaltet und abgetrennt werden, bevor die Prüfanschlüsse hergestellt werden.

Isolationsprüfungen werden nur ausgelöst, wenn die Taste **TEST** gedrückt wird.

1. Stellen Sie den Bereichsschalter auf die gewünschte Prüfspannung.
2. Verbinden Sie die Prüfkabel zuerst mit dem Gerät, dann mit dem isolierten Gegenstand, der geprüft werden soll.
3. Drücken Sie die Taste **TEST**, um die Prüfspannung anzulegen. Lesen sie das Ergebnis ab.
4. Lassen Sie die Taste **TEST** am Ende der Prüfung los. Der letzte Ablesewert bleibt auf der Anzeige.
5. Alle kapazitiven Stromkreise, die während einer Prüfung aufgeladen wurden, werden automatisch entladen. Wenn eine bedeutende Spannung verbleibt, erscheint die Spannungswarnung, und die vorhandene Spannung wird angezeigt.
6. Entfernen Sie die Prüfkabel erst, wenn keine Spannung mehr angezeigt wird.

Einrastende Prüftaste (ltb)

Wenn eine lange Isolationsprüfung ausgeführt werden soll, kann die Prüfung 'verriegelt' werden, indem die Taste gedrückt wird, während die Taste TEST gedrückt gehalten wird. Auf der Anzeige erscheint die Warnung ⚠, beide Tasten können losgelassen werden, und die Prüfung fährt fort. Die Prüfung wird beendet, indem die Taste **TEST** gedrückt wird.

Hinweis: *Bei der ersten Betätigung des Bereichs '1000V' gibt es, jedesmal, wenn dieser Bereich ausgewählt wird, eine kurze Verzögerung. Dies soll das unbeabsichtigte Anlegen von 1kV verhindern.*

Prüfung des Polarisationsindex

Als Polarisationsindex (PI) wird das dielektrische Absorptionsverhältnis bezeichnet, wenn Widerstandswerte nach 1 Minute und wieder nach 10 Minuten gemessen werden. Der Polarisationsindex ist dann der

Bedienung

Widerstandswert nach 10 Minuten geteilt durch den Widerstandswert nach 1 Minute. Die Prüfung kann bei beliebiger Spannung ausgeführt werden. Sie finden ausführlichere Angaben zur PI-Prüfung und der Bewertung der Ergebnisse in den auf der Zubehörseite aufgeführten Veröffentlichungen von AVO International.

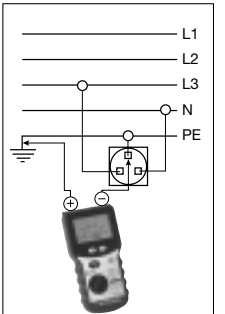

FIG.1

TYPISCHE EIGENSCHAFTEN DER ANSCHLUßSPANNUNG

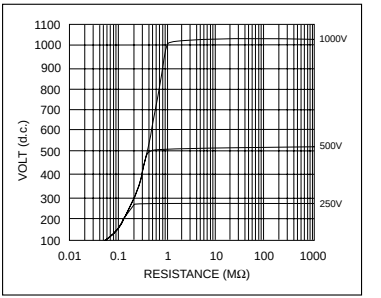

Automatische Entladung

Wenn die Taste TEST nach einer Isolationsprüfung losgelassen wird (bzw. nochmals gedrückt wird, wenn die Taste eingerastet war), wird automatisch eine 200kΩ-Last über die Anschlüsse geschaltet, um den geprüften Gegenstand zu entladen. Gegebenenfalls vorhandene Spannung wird auf der Anzeige angezeigt, so dafl die Entladung überwacht werden kann.

Durchgangsprüfung (Ω) (Siehe Abb. 2)

Die Durchgangsprüfungen werden aktiviert, wenn die Sonden einen Kontakt von weniger als einigen kΩ machen. Die Prüfung läuft ab, ohne dafl die Taste **TEST** gedrückt werden mufl. Wenn die Prüfkabel entfernt werden, bleibt die Anzeige während einiger Sekunden erhalten und wird dann zurückgesetzt. Dieser Bereich eignet sich nicht für die Prüfung von Dioden, da der automatische

Bedienung

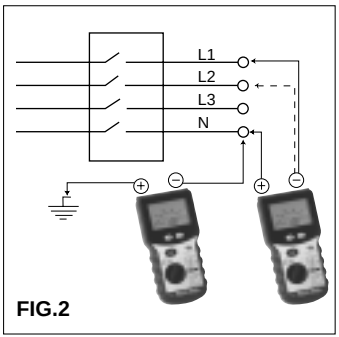

FIG.2

Kontaktdetektor nicht aktiviert wird, wenn das Gerät an eine Diode angeschlossen ist.

1. Stellen Sie den Wahlschalter in die Stellung Ω.
2. Schlieflen Sie die Prüfkabel an.
3. Die Prüfung wird automatisch aktiviert.
4. Nachdem die Prüfsonden abgetrennt sind, bleibt die Anzeige während einiger Sekunden erhalten.

Nullen des Prüfkabelwiderstands

Der Widerstand der Prüfkabel kann im Durchgangsbereich (bis 9,99Ω) genullt werden. Die Nullinformation wird in einem nichtflüchtigen Speicher gespeichert und bleibt so erhalten, wenn das Gerät ausgeschaltet wird.

1. Wählen Sie den Durchgangsbereich.
2. Schlieflen Sie die Prüfkabel mittels Prüfspitzen über eine bekannten guten Leiter kurz.
3. Drücken Sie die Taste **TEST**, wenn sich die Anzeige stabilisiert hat. Das Symbol für die Nullpunktverschiebung ⊖ erscheint.
4. Drücken Sie die Taste **TEST** nochmals, um die Nullpunktverschiebung zu lösen.

Mögliche Fehlerquellen

Messungen und Ergebnisse können folgendermaßen beeinträchtigt werden:

- Durch die Impedanz von parallelgeschalteten laufenden Stromkreisen
- Durch die Impedanz, beispielsweise von Induktionsspulen, die sich während der Messung verändert
- Durch eine schlechte Verbindung mit dem zu prüfenden Stromkreis

Bedienung

Durchgangspiepser

Der Dauer-Piepser ertönt ununterbrochen, wenn ein Widerstand unter der Grenzstufe aufgespürt wird. Dieser kann aus einer Reihe von Werten zwischen 2Ω und 3kΩ gewählt werden. Um die Stufe zu ändern, drücken Sie die Taste . Die werden einige kurze Pieptöne hören, die Werte über dem Stufenwert, aber unter ca. 3kΩ repräsentieren.

1. Stellen Sie den Wahlschalter in die Stellung .
2. Schlieflen Sie die Prüfkabel an.

Anzeige (5Ω Stufe gewählt):	Hörbar:
<5Ω	anhaltendes Piepsen
<3kΩ	kurzer Piepston
>3kΩ	kein Piepston

Widerstandsprüfungen (kΩ)

ies ist eine Prüfung bei niedriger Spannung (5V) und niedrigem Strom (25 µA) für empfindliche elektronische Geräte. Sie funktioniert genauso, wie die Durchgangsbereiche.

1. Stellen Sie den Wahlschalter in die Stellung kΩ.
2. Schlieflen Sie die Prüfkabel an.
3. Die Prüfung wird automatisch aktiviert.

Der Widerstandsbereich wird durch eine Methode mit hoher Impedanz geschützt. Wenn daher das Gerät an einen stromführenden Stromkreis angeschlossen wird, löst die Sicherung nicht aus, wie bei den Isolations-, Durchgangs- und Summerbereichen. Das Gerät zeigt lediglich die angelegte Überspannung an.

Diodenprüfung

Dieser Bereich kann auch für die Prüfung von Dioden verwendet werden, wobei, die positive Klemme die Quelle des Prüfstroms ist. Das Diodensymbol ▶|– erscheint, wenn die über die Klemmen entstehenden Spannung innerhalb der Grenzen für Halbleiterübergänge liegt. Diese Funktion, zusammen mit dem geringen Prüfstrom und dem großen Meßbereich (0,01kΩ to 10000kΩ) machen den Widerstandsbereich sehr nützlich für die Allzweckprüfung.

Spannungsprüfungen (V)

Wenn an den Klemmen >1V Wechselstrom bzw. Gleichstrom anliegt, wird die gemessene Spannung auf der Anzeige angezeigt. Die Spannungsanzeige funktioniert ordnungsgemäß, selbst wenn die Sicherung ausgelöst hat. Wenn die Funktion des Voltmeters in Frage steht, können

Bedienung

Sie es an einer bekannten Quelle überprüfen.
1. Stellen Sie den Wahlschalter in die Stellung V.
2. Schließen Sie die Prüfkabel an.
3. Nach einer kurzen Beruhigungszeit wird das Ergebnis automatisch angezeigt.

Millivoltprüfungen (mV)

Die gemessene Wechselspannung bzw. Gleichspannung wird auf der Anzeige angezeigt.
1. Stellen Sie den Wahlschalter in die Stellung mV.
2. Wählen Sie mit der Taste ≂ entweder a.c. mV (Wechselstrom) oder d.c. mV (Gleichstrom).
3. Schließen Sie die Prüfkabel an.
4. Nach einer kurzen Beruhigungszeit, wird das Ergebnis automatisch angezeigt.

Messen anderer Parameter

Die Serie BMM500 kann mit Hilfe von mV-Ausgabesonden von der Temperatur bis hin zu Spannung und Windgeschwindigkeit mehrere Einheiten messen. Dabei kann eine beliebige, kompatible Sonde mit einem bekannten Ausgabemassstab angewendet werden. Z.B.: die Messung einer Temperatursonde mit einem Ausgabemassstab von 1mV/ºC wird auf der Anzeige direkt in ºC umgesetzt.

Bestimmte Sonden, wie z.B. Windgeschwindigkeitsmesser, müssen auf Null gesetzt werden. Die weiter unten beschriebene mV-Nulloption ermöglicht dieses Verfahren.

Nullen von d.c. mV (keine Funktion zum Nullen von a.c. mV)

Um den d.c. mV-Bereich zu nullen, schließen Sie die Kabel in der Stellung d.c. mV kurz, warten, bis sich die Anzeige stabilisiert hat, und drücken dann die Taste **TEST**. Bis zu 9,9mV können im Bereich d.c. mV genullt werden. Das Symbol ⊖ erscheint, um anzuzeigen, daß der Nullpunkt eingestellt wurde.
1. Wählen Sie den Bereich d.c. mV.
2. Schließen Sie die Prüfkabel miteinander kurz.
3. Drücken Sie die Taste **TEST**, nachdem sich die Anzeige stabilisiert hat. Das Symbol für die Nullpunktverschiebung ⊖ erscheint.
4. Drücken Sie die Taste **TEST** nochmals, um die Nullpunktverschiebung zu lösen.

Bedienung

Ersetzen der Batterie

Wenn das Symbol für schwache Batterieladung ⊣|⊢ erscheint, sind die Zellen beinahe leer und sollten so bald wie möglich ersetzt werden. Verwenden Sie Alkalizellen IEC LR6 (AA) oder wiederaufladbare NiCd/NiMH-Zellen. Zum Einbauen bzw. Ersetzen der Zellen trennen Sie die Prüfkabel ab, schalten das Gerät AUS und lösen die unverlierbaren Schrauben hinten am Batteriefach. Nehmen Sie die Abdeckung ab, und trennen Sie den Batteriehalter von den Batteriekabeln. Achten Sie darauf, daß die Ersatzzellen mit der richtigen Polarität, entsprechend dem Schild im Batteriehalter eingesetzt werden. Schließen Sie den Batteriehalter wieder an die Batteriekabel an. Bringen Sie die Abdeckung des Batteriefachs wieder an, und befestigen Sie sie. Nehmen Sie die Zellen heraus, wenn das Gerät während längerer Zeit nicht benutzt werden wird.

Die Serie BMM500 beinhaltet einen elektronischen Kontakt-Detektor für das Minimieren der Möglichkeit, dass die Sicherung durchbrennt, auch wenn das Gerät unabsichtlich einen stromführenen Kreis berührt, während es auf den Durchgangsbereich gestellt ist. Das Gerät enthält unter dem Batteriefachdeckel eine weitere Sicherung für den unwahrscheinlichen Fall, dass die Sicherung augetauscht werden muss.

Kontrollieren und Ersetzen von Sicherungen

Sie kontrollieren die Sicherung des Geräts, indem Sie in einen Isolationsbereich schalten, und die Taste **TEST** drücken. Wenn die Sicherung durchgeschmolzen ist, erscheint das Symbol ⊣▭⊢ . Zum Ersetzen der Sicherung trennen Sie die Prüfkabel ab, schalten das Gerät AUS und lösen die unverlierbaren Schrauben, mit denen die Abdeckung des Batteriefachs befestigt ist. Nehmen Sie die Abdeckung ab, und ersetzen Sie die Sicherung. Bringen Sie die Abdeckung des Batteriefachs wieder an, und befestigen Sie sie.

Verwenden der Geschalteten Sonde MEGGER SP1

Bedienung: Die Sonde **MEGGER SP1** ist ein Zubehörteil für als solche bezeichnete Installationsprüfgeräte von **MEGGER**. Wenn sie anstelle des vorhandenen 'niedrigen' Kabels an den speziell konstruierten Stecker angeschlossen wird, wirkt die **SP1** als Fernauslösung für die Taste **TEST** zur Bedienung des Geräts und als 'niedrige' Sonde. Dies vereinfacht die Bedienung des Geräts und die zweihändige Sondenhandhabung. Die SP1 eignet sich für den Gebrauch mit **MEGGER** Isolationsprüfgeräten mit bis zu 1kV Ausgangsprüfspannung.

Bedienung

Sicherheit: Erfüllt die Sicherheitsanforderungen für Doppelisolation nach IEC1010-2-031 (1995), EN61010-2-031 (1995), IEC1010-1 (1995), EN61010-1 (1995) Kategorie III*, 300V Phase gegen Erde und 500V Phase gegen Phase. Die Sonde ist mit einer internen, nicht ersetzbaren Sicherung ausgestattet, die den Benutzer schützt, falls die Sonde aus Versehen in Verbindung mit einem Prüfkabel in der niedrigen Klemme benutzt wird.

* Bezieht sich auf vorübergehende Überspannungen, die in Installationen mit fester Verdrahtung auftreten können.

Verwenden Sie die Sonde nicht, wenn irgendeines ihrer Bestandteile beschädigt ist.

Technische Daten

(Alle Genauigkeiten sind für +20°C angegeben.)

Isolationsbereich

Nennprüfspannung (Gleichstrom):	250V, 500V, 1000V
Genauigkeit der Prüfspannung:	+15% maximal bei offenem Stromkreis
Kurzschlußstrom :	< 2 mA
Prüfstrom unter Last:	1mA bei min. Durchgangswert der Isolation gemäß BS7671, HD384 und IEC 364, max. 2mA.

Genauigkeit

Beriech	**Ganze Skala**	**Genauigkeit**
1000V	10GΩ	±2% ±2 Ziffern ±0,2% pro GΩ
500V	5GΩ	±2% ±2 Ziffern ±0,4% pro GΩ
250V	2GΩ	±2% ±2 Ziffern ±0,8% pro GΩ

Hinweis: *Die obengenannten Daten gelten nur, wenn hochwertige Silikonkabel verwendet werden.*

Meflbereich :	0,01MΩ bis 10GΩ (0-100GΩ auf Analogskala).
Betriebsbereich nach EN61557:	0,10Ω bis 1GΩ

Durchgang

Meflbereich:	0,01Ω bis 99,9Ω (0 bis 10Ω auf Analogskala)
Betriebsbereich nach EN61557:	0,10Ω bis 99,9Ω
Genauigkeit:	±2% ±2 Ziffern
Spannung bei offenem Stromkreis:	5V ±1V
Prüfstrom:	210mA ±10mA (0-2Ω)

Technische Daten

Nullpunktverschiebung bei Sonden:	typischerweise 0,10Ω
Nullen des Kabelwiderstands:	Bis zu 9,99Ω
Rauschunterdrückung:	1V Wirkspannung 50/60Hz
Summer:	Wählbar - Betrieb bei weniger als 2Ω, 5Ω, 20Ω, 50Ω, 200Ω, 500Ω, 3kΩ (ca.).

Widerstand

Meflbereich:	0,01kΩ bis 9,99MΩ (0 bis 100MΩ auf Analogskala)
Genauigkeit:	±3% ±2 Ziffern
Spannung bei offenem Stromkreis:	5V ±1V
Kurzschluflstrom:	25µA ±5µA

Spannung

Meflbereich:	±1V bis ±600V (0 bis 1000V auf Analogskala)
Genauigkeit:	0-600VDC ±2% ±3 Ziffern
	0-600VAC (50/60Hz) 2% ±3 Ziffern
	0-600V 400Hz a.c. ±5% ±3 Ziffern
Eingangswiderstand:	ca. 200kΩ.
Detektorschwellenwert:	1V

Technische Daten

Millivolt

Meflbereich:	±0,1mV bis ±1999mV (0 bis 1000mV auf Analogskala
Genauigkeit:	0,1mV bis 10mV d.c. bzw. a.c. (50/60Hz) ±2% ±5 Ziffern
	10mV bis 1999mV d.c. bzw. a.c. (50/60 Hz) ±2% ±3 Ziffern
	0,1mV bis 10mV a.c. (16-460 Hz) ±5% ±7 Ziffern
	10mV bis 1999mV a.c. (16-460 Hz) ±5% ±5 Ziffern
Nullen von Millivolt Gleichstrom:	bis 9,9mV
Eingangswiderstand:	>3MΩ

Grundfehler und Betriebsfehler für die Isolations- und Widerstandsbereiche.

Der Grundfehler ist die maximale Ungenauigkeit des Geräts unter idealen Bedingungen, während der Betriebsfehler die maximale Ungenauigkeit unter Berücksichtigung von Batteriespannung, Temperatur, Interferenzen und ggf. Systemspannung und -frequenz ist. Nach Bestimmung des Betriebsfehlers können wir den Meßbereich berechnen. Dies ist der Bereich der Messung, in dem der Fehler im Betrieb weniger als 30% des Ablesewerts beträgt. Bei Digitalgeräten spielt der Fehler der Anzahl Ziffern eine Rolle — wenn z.B. ein Wert von 0,10Ω im Durchgangsbereich gemessen wurde, kann ein Wert im Bereich von 0,07Ω bis 0,13Ω angezeigt werden, was einem maximalen Fehler von 30% entspricht. Daher ist der Meflbereich für die Messung von niedrigen Widerständen 0,10Ω bis 99,9Ω. Wenn kontrolliert wird, daß eine Messung eine Grenze nicht überschreitet, muß der Betriebsfehler berücksichtigt werden. Dies kann mit den nachfolgenden Tabellen schnell und einfach erfolgen. Diese garantieren, daß der gemessene Wert größer bzw. kleiner ist als der jeweils angegebene Grenzwert.

Technische Daten

Isolationswiderstand – MΩ

Grenze	Min. angezeigter Ablesewert	Grenze	Min. angezeigter Ablesewert
0,10	0,14	2,00	2,12
0,20	0,25	3,00	3,16
0,30	0,35	4,00	4,20
0,40	0,46	5,00	5,24
0,50	0,56		
0,60	0,66		
0,70	0,77		
0,80	0,87		
0,90	0,98		
1,00	1,08		

Durchgangswiderstand – Ω

Grenze	Min. angezeigter Ablesewert	Grenze	Min. angezeigter Ablesewert
0,10	0,06	2,00	1,88
0,20	0,15	3,00	2,84
0,30	0,25	4,00	3,80
0,40	0,34	5,00	4,76
0,50	0,44	10,00	9,56
0,60	0,54	20,00	18,8
0,70	0,63	30,00	28,4
0,80	0,73	40,00	38,0
0,90	0,82	50,00	47,6
1,00	0,92	100,00	92,0

Technische Daten

SICHERHEIT

Die Geräte erfüllen die Anforderungen für Doppelisolation nach IEC 1010-1 (1995), EN 61010-1 (1995) für Kategorie III*, 300V Phase gegen Erde (Masse) und 440V Phase gegen Phase, ohne Notwendigkeit getrennt abgesicherter Prüfkabel. Bei Bedarf sind abgesicherte Prüfkabel als Sonderzubehör erhältlich.

* Bezieht sich auf vorübergehende Überspannungen, die in Installationen mit fester Verdrahtung auftreten können.

Erfüllt die Anforderungen der folgenden Teile der EN61557, Elektrische Sicherheit in Niederspannungsanlagen bis 1000VAC und 1500VDC – Geräte zum Prüfen, Messen und überwachen von Schutzeinrichtungen:

Teil 1 – Allgemeine Anforderungen
Teil 2 – Isolationswiderstand
Teil 4 – Widerstand der Erdverbindung und Potentialausgleich

SICHERUNG

500mA (F) 600V, 32x 6mm Keramik HBC min. 10kA.

E.M.V.

Die Geräte entsprechen EN 50081-1 und EN 50082-1 (1992).

STROMVERSORGUNG

Batterietyp:	6x1,5V Alkalizellen Typ IEC LR6 oder 1,2V NiCd/NiMH wiederaufladbare Zellen.

Batterielebensdauer (typische Werte):

2100 x 5 Sekunden Isolationsprüfungen bei 1kV.
3200 x 5 Sekunden Isolationsprüfungen bei 500V
4000 x 5 Sekunden Isolationsprüfungen bei 250V
2700 x 5 Sekunden Durchgangsprüfungen
4700 x 5 Sekunden kΩ-Prüfungen

UMGEBUNGSBEDINGUNGEN

Betriebsbereich	-10 bis +50°C
Betriebsfeuchte	90% RF bei 40°C max.
Aufbewahrungstemperaturbereich	-30 bis +70°C
Kalibrationstemperatur	+20°C
Maximale Höhe ü.M.	2000m
Staub- und Wasserschutz	IP54

Technische Daten

Temperaturkoeffizient	<0,1% pro °C
GEWICHT	742g
ABMESSUNGEN	110mm x 220mm x 45mm
REINIGUNG	Mit einem sauberen, mit Seifenwasser oder Isopropylalkohol befeuchteten Tuch abwischen

ZUBEHÖR

Mitgeliefert:	Teilenummer
Prüfkabelsatz	6220-437
Prüf- & Tragekoffer -	

Sonderzubehör:	Teilenummer
Abgesicherter Kabelsatz, FPK8	6111-218
Geschaltete Prüfsonde SP1	6220-606
Prüfprotokollkarten (Packung à 20 Stk)	6111-216

Veröffentlichungen:	
'A Stitch in Time'	AVTM21-P8B
'Testing Electrical Installations'	6172-129

Reparatur und Garantie

Der Stromkreis des Geräts enthält auf statische Ladung empfindliche Komponenten, und die Leiterplatte muß vorsichtig gehandhabt werden. Wenn der Schutz eines Geräts beeinträchtigt wurde, sollte es nicht benutzt werden, und zur Reparatur durch entsprechend ausgebildetes und qualifiziertes Personal eingeschickt werden. Der Schutz kann dann beeinträchtigt sein, wenn das Gerät beispielsweise sichtbar beschädigt ist, die vorgesehenen Messungen nicht ausführt, unter ungünstigen Bedingungen über längere Zeit gelagert wurde oder extremen Transportbeanspruchungen ausgesetzt war.

Neue Gerät haben eine 3-jährige Garantie ab dem Datum des Kaufs durch den Benutzer.

Hinweis: *Jede vorherige unberechtigte Reparatur bzw. Anpassung macht die Garantie automatisch ungültig.*

Gerätereparatur und Ersatzteile

Wenn Sie Service-Ansprüche für ***MEGGER***®-Geräte haben, wenden Sie sich bitte an:

AVO INTERNATIONAL
Archcliffe Road
Dover
Kent CT17 9EN
England
Tel: +44 (0) 1304 502243
Fax: +44 (0) 1304 207342

AVO INTERNATIONAL
Valley Forge Corporate Center
2621 Van Buren Avenue
Norristown, PA 19403
U.S.A.
Tel: +1 (610) 676-8579
Fax: +1 (610) 643-8625

or an approved repair company.

Anerkannte Reparaturbetriebe

Eine Reihe unabhängiger Gerätereparaturbetriebe wurden für die Reparatur der meisten ***MEGGER***®-Geräte anerkannt und verwenden echte ***MEGGER***®-Ersatzteile. Wenden Sie sich für Angaben zu Ersatzteilen, Reparatureinrichtungen und Beratung zum besten Vorgehen an den zuständigen Händler bzw. Vertreter.

Reparatur und Garantie

Einschicken eines Geräts zur Reparatur

Wenn Sie ein Gerät zur Reparatur an den Hersteller zurückschicken, muß es mit vorausbezahltem Porto an die entsprechende Adresse geschickt werden. Eine Kopie der Rechnung und des Lieferscheins sind gleichzeitig mit Luftpost zu schicken, um die Zollabfertigung zu beschleunigen. Dem Absender wird bei Bedarf vor Aufnahme der Arbeit an dem Gerät ein Reparaturkostenvoranschlag überreicht, der Frachtkosten und andere Kosten aufweist.

Contenido

Avisos de Seguridad 60
Description General 61
Funcionamiento 62
Aviso de circuito activo 62
Pruebas de voltaje en sistemas de alta energía 62
Desconexión automática 62
Luz posterior 62
Pruebas de aislamiento (MΩ) 63
Bloqueo del botón de prueba (ltb) 63
Prueba del índice de polarización 63
Descarga automática 64
Prueba de continuidad (Ω) 64
Puesta a cero de la resistencia del conductor de prueba 65
Posibles causas de error 65
Emisor de pitidos de continuidad 66
Pruebas de resistencia (kΩ) 66
Prueba de diodos 66
Pruebas de voltaje (V) 66
Pruebas de milivoltios (mV) 67
Medición de otros parámetros 67
Puesta a cero de mV c.c. (no la función de puesta a cero de mV c.a.) 67
Recambio de pilas 68
Verificación y recambio de fusibles 68
Para usar la función de la sonda conmutada MEGGER SP1: 68
Especificaciones 70
Reparacion y Garantia 76

He aquí los símbolos usados en el instrumento:

Precaución – Peligro de sacudidas eléctricas

Precaución – Consulte la Guía del usuario.

Equipo protegido mediante aislamiento doble (Clase II).

Equipo conforme con las Directivas de la UE actuales.

El equipo no debe ser conectado a fuentes de voltaje > 600V CAT III adecuadas para instalaciones eléctricas CAT III 300V a tierra.

AVISOS DE SEGURIDAD

- Antes de usar el instrumento deberán leerse y comprenderse las precauciones y los avisos de seguridad pertinentes. Deberán ser observados durante el uso.
- El circuito en prueba debe ser desenergizado y aislado antes de efectuar las conexiones, exceptuando la medición de voltaje.
- Las conexiones de circuito no deben tocarse durante las pruebas.
- Después de las pruebas de aislamiento, deberá permitirse que se descarguen los circuitos capacitivos antes de desconectar los conductores de prueba.
- El aviso de circuito activo y la descarga automática son funciones de protección adicionales que no deberán ser consideradas como sustituto a las medidas de seguridad en el trabajo normales.
- Los fusibles de repuesto deben ser del tipo y capacidad correctos. Si no se instala el fusible de capacidad correcta, el instrumento resultará dañado si se producen sobrecargas .
- Los conductores de prueba, incluidos las pinzas de cocodrilo, deben estar en buen estado de servicio, limpias y con el aislamiento intacto.
- Los organismos oficiales de seguridad del R.U. recomiendan usar conductores de prueba con fusible durante la medición de voltaje en sistemas de alta energía.

NOTA:

LOS INSTRUMENTES SÓLO DEBERÁN SER USADOS POR PROFESIONALES ADIESTRADOS Y COMPETENTES.

Se recuerda a los usuarios de este equipo y/o a sus patronos que la legislación de salud y seguridad requiere que realicen evaluaciones de riesgo válidas de todo el trabajo eléctrico, con el fin de identificar posibles fuentes de peligro eléctrico y riesgo de recibir lesiones eléctricas, a causa de por ejemplo cortocircuitos imprevistos. Donde las evaluaciones muestran que el riesgo es significativo deberán usarse conductores de prueba con fusible de acuerdo con la nota de guía HSE GS38 'Equipos de prueba eléctricos para uso por electricistas'.

Description General

Enhorabuena por haber adquirido un verificador de aislamiento/continuidad Megger auténtico. La firma Megger posee más de 100 años de experiencia en la verificación del aislamiento, lo cual se refleja en los diseños de sus productos. El BMM500 ha sido desarrollado con cuidado para beneficiar y satisfacer las necesidades reales del usuario.

Los instrumentos **MEGGER Serie BMM500** son probadores de aislamiento y continuidad accionados por batería, con una capacidad de medición de 0,01Ω de continuidad a 10GΩ de aislamiento.

Ofreciendo facilidades multivoltaje, los instrumentos aprovechan al máximo la tecnología de microprocesadores e incluyen una gran pantalla por cristal líquido en la cual se combinan lecturas digitales y analógicas. La pantalla analógica ofrece la ventaja de indicar las tendencias y fluctuaciones en las lecturas, mientras que la lectura digital aporta precisos resultados directos. La pantalla también tiene luz posterior, que aporta buena visibilidad incluso en las condiciones de alumbrado más malas.

Los instrumentos de la Serie BMM500 ofrecen la posibilidad única de poder medir voltajes hasta una resolución de 0,1mV. Esto ofrece al usuario la posibilidad de instalar una amplia variedad de transductores para realzar todavía más las capacidades de los instrumentos de la Serie BMM, como por ejemplo las mediciones de temperatura o humedad.

Un conector adaptado en la parte superior del instrumento permite usar la sonda conmutada opcional **MEGGER SP1** en funcionamiento a dos manos.

Los rangos de 250V, 500V y 1000V pueden usarse para probar instalaciones eléctrica de acuerdo con la BS7671 (16 Edición del Reglamento de Cableado IEEE) IEC364 y HD384, puesto que cada rango tiene una corriente de prueba mínima de 1mA a los valores de aislamiento de pase mínimos especificados en estos documentos.

Diseñados de acuerdo con la IEC1010-1 los instrumentos de la Serie BMM500 están protegidos contra la conexión a un suministro de 300V de Categoría III. Los instrumentos son capaces de aportar una precisión básica de ±2% a 20°C. Los instrumentos son herméticos al agua y al polvo según la IP54. Esto ayuda a mantener la precisión al tiempo que asegura la máxima fiabilidad en entornos de trabajo arduos.

Funcionamiento

Consulte los avisos de seguridad antes de usar el instrumento.

Las pruebas son inhibidas automáticamente si:

- Hay un voltaje externo de >55V presente cuando se selecciona cualquier posición del rango de aislamiento.
- Hay un voltaje externo de >10V presente en los demás rangos (excluyendo **OFF/V**).

El voltaje externo es visualizado en la pantalla, mientras que en el rango de aislamientos se producirá un pitido si se intenta una prueba.

Aviso de circuito activo

Si se aplican más de 25V a los bornes en el rango de aislamientos, el instrumento se transforma por defecto en un voltímetro y produce un aviso audible si se intenta realizar pruebas. En las demás posiciones de interruptor, excepto **OFF/V**, cuando se aplican más de 10V, el voltímetro por defecto será activado. Las pruebas serán inhibidas.

Pruebas de voltaje en sistemas de alta energía

Adopte precaución extremada al usar o medir voltajes superiores a 30V, particularmente en sistemas de alta energía. Los conductores de prueba con fusible se ofrecen disponibles como accesorios opcionales para aplicaciones locales en las que se requiere una mayor protección.

Desconexión automática

Para conservar la vida útil de la batería, la desconexión automática (precedida de una serie de pitidos) se activa después de unos10 minutos de inactividad del instrumento en aislamiento, y de 5 minutos en los demás rangos. Si se conmuta el instrumento mientras se mantiene pulsada la tecla , el tiempo de la desconexión automática se prolonga a 60 minutos. Para restaurar el funcionamiento después de la desconexión automática, seleccione **OFF** seguido de la posición de interruptor requerida.

Nota: *Se recomienda desconectar el instrumento cuando no sea usado.*

Luz posterior

La luz posterior es activada pulsando la tecla 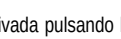 . La luz posterior permanecerá encendida durante aproximadamente un minuto antes de apagarse

Funcionamiento

automáticamente para conservar la vida útil de la batería, o bien puede pulsarse de nuevo la tecla .

Pruebas de aislamiento (MΩ) (vea la figura 1)

Las pruebas de aislamiento aplican a un voltaje conocido al circuito en prueba y miden la corriente de fuga resultante. El circuito en prueba debe ser desenergizado y aislado por completo antes de efectuar las conexiones de prueba.

Las pruebas de aislamiento sólo se inician al pulsar el botón **TEST** (prueba).

1. Seleccione el interruptor de rango al voltaje de prueba requerido.
2. Conecte los conductores de prueba, primero al instrumento, y luego al elemento aislado en prueba.
3. Pulse el botón **TEST** para activar el voltaje de prueba. Tome la lectura.
4. Suelte el botón **TEST** al final de la prueba. La última lectura se mantendrá visualizada en la pantalla.
5. Todos los circuitos capacitivos cargados durante una prueba se descargarán automáticamente. Si un voltaje significativo permanece, se producirá el aviso de voltaje y se visualizará el voltaje presente.
6. Retire los conductores de prueba sólo cuando no haya ningún voltaje visualizado.

Bloqueo del botón de prueba (ltb)

Si es preciso realizar una prueba de aislamiento, ésta puede 'bloquearse' pulsando la tecla mientras se mantiene pulsado el botón de prueba. Se visualizará en la pantalla el aviso ⚠ y podrán soltarse ambos botones mientras la prueba continúa. La pulsar el botón de prueba siguiente se terminará la prueba.

Nota: *Hay un breve retardo el la primera operación del rango '1000V', cada ves que se selecciona el rango. Con esto se evita aplicar 1kV por descuido.*

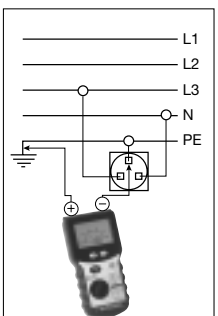

FIG.1

Prueba del índice de polarización

El índice de polarización (PI) es el término aplicado a la relación de absorción dieléctrica cuando los

Funcionamiento

valores de resistencia son medidos después de 1 minuto y de nuevo después de 10 minutos. El índice de polarización es así pues el valor de resistencia después de 10 minutos dividido por el valor de resistencia después de 1 minuto. La prueba puede realizarse a cualquier voltaje. Una información más detallada sobre la prueba PI y la evaluación de valor podrá hallarse en las publicaciones de AVO International que aparecen en la página de Accesorios.

Descarga automática

Al soltar el botón **TEST** después de una prueba de aislamiento (o al volver a pulsarlo, si está activada la función ltb), se conmuta una carga de 200kΩ automáticamente entre los bornes para descargar el elemento en prueba. Cualquier voltaje presente será visualizado en la pantalla, de modo que pueda ser supervisada la descarga.

CARACTERÍSTICAS TÍPICAS DEL VOLTAJE DE BORNES

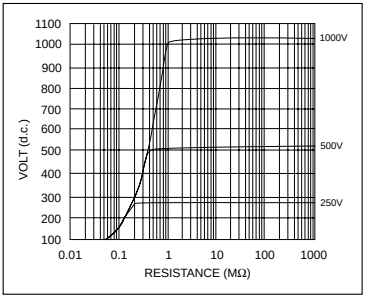

Prueba de continuidad (Ω)
(vea la figura 2)

Las pruebas de continuidad son activadas cuando las sondas hacen un contacto inferior a algunos kΩ. La prueba funciona sin necesidad de pulsar el botón **TEST**. Cuando se retiran los conductores de prueba la lectura se mantiene

Funcionamiento

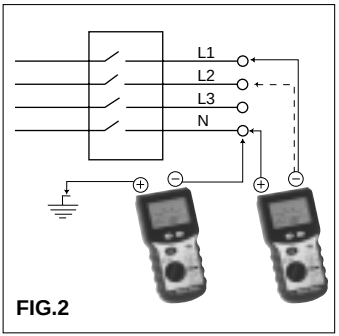

FIG.2

durante algunos segundos y luego se resetea. Este rango no es apropiado para la prueba de diodos porque el detector de contacto automático no será activado cuando se conecta a un diodo.

1. Sitúe el interruptor selector en Ω.
2. Conecte los conductores de prueba.
3. La prueba se activará automáticamente.
4. Después la prueba las sondas son desconectadas, y la lectura será mantenida durante algunos segundos.

Puesta a cero de la resistencia del conductor de prueba

La resistencia de los conductores de prueba puede ser anulada en el rango de continuidad (hasta 9,99Ω). La información anulada es retenida en una memoria involátil y por ello será recordada cuando se apaga el instrumento.

1. Seleccione el rango de continuidad.
2. Cortocircuite los conductores de prueba entre un conductor en buen estado de servicio conocido usando puntas de prueba.
3. Cuando se ha estabilizado la lectura, pulse el botón **TEST**. Se visualizará el símbolo ⊖ de desviación cero.
4. Para liberar la desviación cero pulse el botón de prueba de nuevo.

Posibles causas de error

Las mediciones y los resultados pueden verse afectados por lo siguiente:

- La impedancia de los circuitos operativos conectados en paralelo.
- La impedancia tal como la de los inductores que puede variar durante la medición.
- Una conexión ineficaz al circuito en prueba.

Funcionamiento

Emisor de pitidos de continuidad

El localizador de continuidad suena continuamente cuando se detecta una resistencia inferior al nivel del umbral. Este puede ser seleccionado de varios valores entre 2Ω y 3kΩ. Para cambiar el nivel, presione el botón . Sonarán pitidos cortos indicando valores superiores al umbral pero inferiores a unos 3kΩ.

1. Sitúe el interruptor selector en
2. Conecte los conductores de prueba.

Visualizador (nivel de 5Ω seleccionado):	**Audible:**
<5Ω	pitido continuo
<3kΩ	pitido corto
>3kΩ	no hay pitido

Pruebas de resistencia (kΩ)

Esta es una prueba de bajo voltaje (5V) y baja corriente (25µA) para equipos electrónicos sensibles. Funciona del mismo modo que los rangos de continuidad.

1. Sitúe el interruptor selector en kΩ.
2. Conecte los conductores de prueba.
3. La prueba se activará automáticamente.

El rango de resistencia está protegido mediante un sistema de alta impedancia y por consiguiente, si el instrumento es conectado a un circuito activo, el fusible no se quemará como en los rangos de aislamiento, continuidad y zumbador. El instrumento simplemente indicará el sobrevoltaje aplicado.

Prueba de diodos

Este rango también puede ser usado para la prueba de diodos, siendo el borne positivo la fuente de la corriente de prueba. El símbolo del diodo →|– se visualizará si el voltaje desarrollado entre los bornes está dentro de los límites del empalme de semiconductores. Estas características, junto con la pequeña corriente de prueba y el amplio rango de medición (0,01kΩ a 10000kΩ) hacen que el rango de resistencia sea sumamente útil para las pruebas de tipo general.

Pruebas de voltaje (V)

Si hay >1V c.a. o c.c. presente en los bornes, el voltaje medido es visualizado en la pantalla. El visualizado del voltaje funcionará dentro de las especificaciones incluso si se ha quemado el fusible. Si sospecha el buen

Funcionamiento

funcionamiento del voltímetro, pruebe voltímetro en una fuente conocida.

1. Sitúe el interruptor selector en V.
2. Conecte los conductores de prueba.
3. Después de un corto período de estabilización, la lectura será visualizada automáticamente.

Para visualizar la frecuencia de los V c.a. medidos, pulse la tecla . La frecuencia será visualizada en el rango de 16Hz-460Hz. Para visualizar los V c.c. pulse la tecla de nuevo.

Pruebas de milivoltios (mV)

El voltaje c.a. o c.c. medido es visualizado en la pantalla.

1. Sitúe el interruptor selector en mV.
2. Seleccione mV c.a. o c.c. pulsando la tecla .
3. Conecte los conductores de prueba.
4. Después de un corto período de estabilización, la lectura será visualizada automáticamente.

Medición de otros parámetros

Los instrumentos de la Serie BMM500 pueden ser utilizados para medir numerosas cantidades desde temperatura y corriente hasta la velocidad del viento, mediante el uso de cabezales medidores de salida en mV. Podrá ser utilizado cualquier cabezal medidor compatible con una tasa de potencia de salida conocida. Por ejemplo, con un cabezal medidor de temperatura con una tasa de potencia de salida de 1mV/ºC, la medición será se visualizada directamente en ºC.
Ciertos cabezales de medición deben ser puestos a cero, como por ejemplo unanemómetro de velocidad del viento. La característica opcional de puesta a cero mV descrita a continuación ofrece esta facilidad.

Puesta a cero de mV c.c. (no la función de puesta a cero de mV c.a.)

Para poner a cero el rango mV c.c., cortocircuite juntos los conductores en la posición mV c.c., espere a que se estabilice la lectura y luego pulse el botón **TEST**. Hasta 9,9mV podrán ser puestos a cero en el rango mV c.c. El símbolo ⊖ se visualizará para indicar que se ha ajustado el cero.

1. Seleccione el rango mV c.c.
2. Cortocircuite juntos los conductores de prueba.
3. Cuando la lectura se ha estabilizado, pulse el botón **TEST**. Se visualizará el símbolo desviación cero ⊖

Funcionamiento

4. Para liberar la desviación cero pulse el botón **TEST** de nuevo.

Recambio de pilas

Al aparecer el símbolo ⊣⊢ , las pilas están casi agotadas y deberán ser recambiadas lo antes posible. Use solamente ya sea pilas alcalinas IEC LR6 (AA), o bien pilas NiCd/NiMH recargables. Para instalar o recambiar las pilas, desconecte los conductores de prueba, apague el instrumento y afloje los tornillos imperdibles situados en la parte posterior del soporte de la batería. Quite la tapa y desconecte el soporte de la batería de los conductores de la batería. Asegure que las pilas de repuesto sean instaladas con la polaridad correcta de acuerdo con la etiqueta incluida en el alojamiento de la batería. Vuelva a conectar el soporte de la batería a los conductores de ésta. Reinstale y vuelva a sujetar la tapa del soporte de la batería. Retire las pilas si el instrumento no va a ser usado durante un período prolongado de tiempo.

Los instrumentos de la Serie BMM500 incorporan un detector de contacto electrónico que reduce al mínimo la posibilidad de quemarse el fusible, incluso si se aplica accidentalmente a un circuito activo mientras está conmutado al rango de continuidad. En el poco probable caso de que el fusible requiera recambio, se incluye uno de repuesto alojado debajo de la tapa de la batería.

Verificación y recambio de fusibles

Para verificar el fusible del instrumento, conmute a un rango de aislamiento y pulse el botón TEST. El símbolo ⊣▭⊢ se visualizará si el fusible se quema. Para recambiar el fusible, desconecte los conductores de prueba, apague el instrumento y afloje los tornillos imperdibles que sujetan en su sitio la tapa del soporte de la batería. Retire la tapa y recambie el fusible. Reinstale y vuelva a sujetar la tapa del soporte de la batería.

Para usar la función de la sonda conmutada MEGGER SP1:

El **MEGGER SP1** es un accesorio para uso con instrumentos de prueba de instalación designados por MEGGER. Cuando se instala en el conector especialmente diseñado, en lugar del conductor 'Bajo' existente, el SP1 actúa a modo de botón TEST remoto para operar el instrumento y como sonda 'Baja'. Esto simplifica el control del instrumento y del sondeo a dos manos. El SP1 es adecuado para uso con Instrumentos de prueba de aislamiento MEGGER de hasta 1kV de salida.

Funcionamiento

Seguridad: Satisface los requerimientos de seguridad de aislamiento doble según las IEC1010-2-031 (1995), EN61010-2-031 (1995), IEC1010-1 (1995), EN61010-1 (1995) Categoría III*, 300V de fase a tierra y 500V de fase a fase. La sonda está provista de un fusible interno, no recambiable, para proteger al usuario, si la sonda se usa por descuido en conjunción con una conductor de prueba en el borne bajo.

* Referente a sobrevoltajes transitorios probablemente presentes en instalaciones de cableado fijas.

⚠ **No use la sonda si cualquier parte de ella está dañada.**

Especificaciones

(Todas las precisiones se indican a +20°C.)

Rango de aislamientos

Prueba nominal:	250V, 500V, 1000V
Precisión de voltaje de prueba:	+15% máximo en circuito abierto
Corriente de cortocircuito:	<2mA
Corriente de prueba en carga:	1mA a valor de aislamiento de paso mínimo especificado en BS7671, HD384 y IEC 364, 2mA máximo.

Precisión

Rango	Escala máxima	Precisión
1000V	10GΩ	±2% ±2 dígitos ±0,2% per GΩ
500V	5GΩ	±2% ±2 dígitos ±0,4% per GΩ
250V	2GΩ	±2% ±2 dígitos ±0,8% per GΩ

Nota: *Las especificaciones arriba indicadas solamente son aplicables cuando se usan conductores de silicona de alta calidad.*

Rango de medición:	0,01 MΩ a10GΩ (0-100 GΩ en escala analógica).
EN61557 Rango operativo:	0,10Ω a 1GΩ

Continuidad

Rango de medición:	0,01Ω a 99,9Ω (0 a 10Ω en escala analógica)
EN61557 Rango operativo:	0,10Ω a 99,9Ω

Especificaciones

Precisión:	±2% ±2 dígitos
Voltaje en circuito abierto:	5V ±1V
Corriente de prueba:	210mA ±10mA (0-2Ω)
Desviación cero en las sondas:	0,10Ω típica
Puesta a cero del resistencia de conductor:	Hasta 9,99Ω
Rechazo de ruidos:	1V rms 50/60Hz
Zumbador:	Seleccionable – Funciona a menos de 2Ω, 5Ω, 20Ω, 50Ω, 200Ω, 500Ω, 3kΩ (approx)..

Resistencia

Rango de medición:	0,01 kΩ a 9,99MΩ (0 a 100MΩ en escala analógica)
Precisión:	±3% ±2 dígitos
Voltaje en circuito abierto:	5V ±1V
Corriente de cortocircuito:	25µA ±5µA

Voltaje

Rango de medición:	±1V a ±500V (0 a 1000V en escala analógica)
Precisión:	0-500V c.c. ±2% ±3 dígito 0-500V a.c (50/60Hz) 2% ±3 dígitos 0-500V 400Hz c.a. ±5% ±3 dígitos
Resistencia de entrada:	apróx. 200kΩ.
Umbral del detector:	1V

Especificaciones

Milivoltios

Rango de medición:	±0,1mV a ±1999mV (0 a 1000mV en escala analógica)
Precisión:	0,1mV a 10mV c.c. o c.a. (50/60Hz) ±2% ±5 dígitos
	10mV a 1999mV c.c. o c.a. (50/60Hz) ±2% ±3 dígitos
	0,1mV a 10mV c.a.(16-460Hz) ±5% ±7 dígitos
	10mV a 1999mV c.a. (16-460Hz) ±5% ±5 dígitos
Puesta a cero de milivoltios de c.c.:	Hasta 9,9mV
Resistencia de entrada:	>3MΩ

Errores básicos y de servicio para rangos de aislamiento y resistencia.

El error básico es la máxima inexactitud del instrumento en condiciones ideales, mientras que el error de servicio es la máxima inexactitud teniendo en cuenta el efecto del voltaje de la batería, temperatura, interferencia, además de voltaje y frecuencia del sistema, en los casos aplicables. Después de determinar el error de servicio, podremos calcular el rango de medición. Este es el rango medición sobre el cual el error en servicio es inferior a un 30% de la lectura. Los instrumentos digitales son afectados por el error del número de dígitos – por ejemplo un valor de 0,10Ω medido con el rango de continuidad puede aportar una visualización en el rango de 0,07Ω a 0,13Ω, lo cual es un error máximo de un 30%. Así pues, el rango de medición que mide resistencia baja es de 0,10Ω a 99,9Ω. Cuando se verifica que una medición no excede un límite, debe tenerse en cuenta el error de servicio, y estas tablas permiten hacer esto de manera rápida y fácil. Estas tablas garantizan que el valor que se está midiendo es superior o inferior al valor límite especificado como apropiado.

Especificaciones

Resistencia del aislamiento – MΩ

Límite	Lectura indicada mínima	Límite	Lectura indicada mínima
0,10	0,14	2,00	2,12
0,20	0,25	3,00	3,16
0,30	0,35	4,00	4,20
0,40	0,46	5,00	5,24
0,50	0,56		
0,60	0,66		
0,70	0,77		
0,80	0,87		
0,90	0,98		
1,00	1,08		

Resistencia de continuidad – Ω

Límite	Lectura indicada mínima	Límite	Lectura indicada mínima
0,10	0,06	2,00	1,88
0,20	0,15	3,00	2,84
0,30	0,25	4,00	3,80
0,40	0,34	5,00	4,76
0,50	0,44	10,00	9,56
0,60	0,54	20,00	18,8
0,70	0,63	30,00	28,4
0,80	0,73	40,00	38,0
0,90	0,82	50,00	47,6
1,00	0,92	100,00	92,0

Especificaciones

SEGURIDAD

Los instrumentos satisfacen los requerimientos de aislamiento doble según IEC61010-1 (1995), EN61010-1 (1995) Categoría de Instalación III***, hasta 300V de fase a tierra (masa) y 400V de fase a fase, sin necesidad de conductores de prueba con fusibles separados. Si se requieren, hay disponibles conductores de prueba con fusibles como accesorio opcional.

* Referente a sobrevoltajes transitorios probablemente presentes en instalaciones de cableado fijas.

Conforme con las partes siguientes de la EN61557, pertinentes a la seguridad eléctrica en sistemas de bajo voltaje de hasta 1000V c.a. y 1500V c.c. - Equipos de prueba, medición o vigilancia de medidas de protección:-

Parte 1 – Requerimientos generales
Parte 2 – Resistencia del aislamiento
Parte 4 – Resistencia de la conexión a tierra y ligazón equipotencial

FUSIBLE

500mA (F) 600V, 32 x 6mm cerámica HBC 10kA mínimo.

E.M.C.

Los instrumentos satisfacen las normas EN 50081-1 y EN 50082-1 (1992).

SUMINISTRO ELECTRICO

Tipo de batería: 6 pilas alcalinas de 1,5V tipo IEC LR6 ó pilas NiCd/NiMH recargables de 1,2V.

Vida útil de la batería (típica):
2100, pruebas de aislamiento de 5 segundos a 1kV.
3200, pruebas de aislamiento de 5 segundos a 500V
4000, pruebas de aislamiento de 5 segundos a 250V
2700, pruebas de continuidad de 5 segundos
4700, pruebas de kΩ de 5 segundos

Especificaciones

CONDICIONES MEDIOAMBIENTALES

Rango operativo	-10 a +50°C
Humedad en servicio	90% RH a 40°C máx.
Temperatura de almacenaje	-30 a +70°C
Temperatura de calibración	+20°C
Altitud máxima	2000m
Protección contra polvo y agua	IP54
Coeficiente de temperatura	<0,1% por °C
Peso	742g
Dimensiones	110mm x 220mm x 45mm
Limpieza	Limpie con un trapo limpio humedecido en agua jabonosa o alcohol isopropílico (IPA).

ACCESORIOS

Suministrados	Número de pieza
Juego conductor de prueba	6220-437
Estuche de prueba portátil	-

Opcionales:	Número de pieza
Juego de conductor con fusible, FPK8	6111-218
Sonda de prueba de interruptor SP1	6220-606
Tarjetas de anotación de prueba (Paquete de 20)	6111-216
AVO PowerSuite	6111-237
AVO NiceOne	6111-403
Conductor en serie de 9 vías	25955-025
Publicaciones:	
'A Stitch in Time'	AVTM21-P8B
'Testing Electric Installations'	6172-129

Reparaciones y Garantia

El circuito del instrumento contiene dispositivos sensibles a estáticas, por lo que debe tenerse precaución al manejar la placa de circuito impreso. Si la protección de un instrumento ha sido afectada, éste no deberá ser usado sino que deberá ser devuelto para ser reparado por personal profesional competente. La protección es probable que se vea afectada si, por ejemplo, el instrumento muestra daños visibles, no ejecuta las mediciones previstas, ha sido almacenado durante un tiempo prolongado en condiciones desfavorables, o bien ha sido expuesto a difíciles condiciones de transporte.

Los nuevos instrumentos están garantizados durante 3 años
a partir de la fecha de compra por el usuario.

Nota: *Cualquier reparación o ajuste no autorizado invalidará automáticamente la garantía.*

Reparación del instrumento y piezas de repuesto

Para requerimientos de servicio de instrumentos ***MEGGER***®, póngase en contacto con:-

AVO INTERNATIONAL
Archcliffe Road
Dover
Kent CT17 9EN
Inglaterra
Tel: +44 (0) 1304 502243
Fax: +44 (0) 1304 207342

AVO INTERNATIONAL
Valley Forge Corporate Center
2621 Van Buren Avenue
Norristown, PA 19403
EE.UU.
Tel: +1 (610) 676-8579
Fax: +1 (610) 643-8625

o con una empresa de reparación aprobada.

Empresas de reparación aprobadas

Cierto número empresas de reparación de instrumentos independientes han sido aprobadas para efectuar trabajos de reparación en la mayoría de los instrumentos ***MEGGER***®, usando piezas de repuesto ***MEGGER***® auténticas. Consulte con el Distribuidor/Agente aprobado referente a piezas de repuesto, facilidades de reparación y asesoramiento sobre las mejores medidas a adoptar.

Reparaciones y Garantia

Devolución de instrumentos para reparación

La devolución del instrumento al fabricante para su reparación deberá hacerse a portes pagados y a la dirección adecuada. Simultáneamente, deberá ser enviada por correo aéreo una copia de la factura y de la nota de embalaje, con el fin de acelerar los trámites aduaneros. Si se requiere, será enviado al remitente un presupuesto de reparación mostrando el precio del flete de devolución y demás gastos originados, antes de comenzar los trabajos de reparación en el instrumento.

Notes

Notes

Notes

AVO INTERNATIONAL

Archcliffe Road
Dover
Kent, CT17 9EN.
England.
Tel: +44 (0) 1304 502100
Fax: +44 (0) 1304 207342

PO Box 9007
Valley Forge
PA 19484-9007
U.S.A.
Tel: +1 (610) 676-8500
Fax: +1 (610) 676-8610

4271 Bronze Way
Dallas
TX 75237-1017
U.S.A.
Tel: +1 (800) 723-2861 (U.S.A. only)
Tel: +1 (214) 330-3203 (International)

MEGGER SARL
29 Allée de Villemomble
93340 Le Raincy
Paris, France
Tel: +33 (1) 43.02.37.54
Fax: +33 (1) 43.02.16.24

This instrument is manufactured in the United Kingdom.
The company reserves the right to change the specification or design without prior notice.

MEGGER is the registered Trade Mark of **AVO INTERNATIONAL LIMITED.** Copyright ©, **AVO INTERNATIONAL LIMITED**

Part No 6172-484 Edition 3 – Printed in England – 01HH

INSULATION MULTIMETERS
MEGGER BMM2500

User Guide

Guide de l'utilisateur

Bedienungsanleitung

MEGGER®

CONTENTS

Safety Warnings 3

General Description 4
- Continuity Testing 9
- Continuity Bleeper 10
- Millivolt Tests 11
- Capacitance Tests 12
- Milliamps Tests 12
- Storing Results 13
- Datalogging 16
- Setup Modes 18

Specification 20

Repair and Warranty 25

Symbols used on the instrument are:

Risk of Electric Shock

Refer to User Guide.

Equipment protected throughout by Double Insulation (Class II).

Equipment complies with current EU Directives.

Equipment must not be connected to installations >500V.

SAFETY WARNINGS

- **Safety Warnings** and **Precautions** must be read and understood before the instrument is used. They **must** be observed during use.
- The circuit under test **must** be de-energized and isolated before connections are made except for voltage measurement.
- Circuit connections **must not** be touched during a test.
- After insulation tests, capacitive circuits must be allowed to discharge **before** disconnecting the test leads.
- The Live Circuit Warning and Automatic Discharge are additional safety features and **should not** be regarded as a substitute for normal safe working practice.
- Replacement fuses **must** be of the correct type and rating. Failure to fit the correctly rated fuse **will** result in **damage** to the instrument in the event of an overload.
- Test leads, including crocodile clips, **must** be in good order, clean and have no broken or cracked insulation.
- Ensure that hands remain behind guards of probes/clips when testing.
- U.K. Safety Authorities recommend the use of fused test leads when measuring voltage on high energy systems.

NOTE

THE INSTRUMENTS MUST ONLY BE USED BY SUITABLY TRAINED AND COMPETENT PERSONS. USERS OF THIS EQUIPMENT AND/OR THEIR EMPLOYERS ARE REMINDED THAT **HEALTH AND SAFETY LEGISLATION** REQUIRE THEM TO CARRY OUT VALID RISK ASSESSMENTS OF ALL ELECTRICAL WORK SO AS TO IDENTIFY POTENTIAL SOURCES OF ELECTRICAL DANGER AND RISK OF ELECTRICAL INJURY SUCH AS FROM INADVERTENT SHORT CIRCUITS. WHERE THE ASSESSMENTS SHOW THAT THE RISK IS SIGNIFICANT THEN THE USE OF FUSED TEST LEADS CONSTRUCTED IN ACCORDANCE WITH THE HSE GUIDANCE NOTE GS38 'ELECTRICAL TEST EQUIPMENT FOR USE BY ELECTRICIANS' SHOULD BE USED.

GENERAL DESCRIPTION

The **MEGGER® BMM2500** Series instruments are battery powered Insulation and Continuity testers, with a measurement capability from 0,01Ω Continuity to 200GΩ Insulation.

Offering multi-voltage facilities, the instruments take full advantage of microprocessor technology and feature a large liquid crystal display combining digital and analogue readings. The analogue display has the benefit of indicating trends and fluctuations in readings, while the digital readout gives direct accurate results. The display is also backlit giving clear visibility even in low light conditions.

The BMM2500 Series instruments have the unique capability of being able to measure voltages down to a resolution of 0,1mV. This gives the user the option to fit a wide variety of transducers to further enhance the capabilities of the BMM Series instruments, eg temperature or humidity measurement.

A customised connector on the top of the instrument enables the optional **MEGGER® SP1** Switched probe to be used for two handed probe operation.

The 250V, 500V and 1000V ranges can be used to test electrical installations in compliance with BS7671 (16th Edition IEEE Wiring Regulations) IEC364 and HD384, since each range has a 1mA minimum test current at the minimum pass values of insulation specified in these documents. The 100V range (BMM2580) is ideal for testing telecommunications equipment which would be damaged by higher voltages. The 50V range (BMM2580) is useful for testing sensitive equipment, such as electronic components, and computer peripherals.

The BMM2500 series instruments have a current facility which enables up to 500mA to be measured, this together with Ω, V and mV ranges means that the instrument can realistically be used in situations where previously a multimeter would be needed. For higher currents an optional current clamp is available.

The BMM2500 series instruments have an RS232 interface built in, and will allow the storage and download of results to a PC. The instruments come with all the necessary software to download and tabulate the results. The download format is also AVO Powersuite compatible enabling instruments to form part of an integrated test and certification system. The BMM2500 series instruments also have the capability to data-log results over an extended time period so that long term measurements of systems can be taken.

Designed to IEC1010-1 the BMM2500 Series are protected against connection to a 500V Category III supply. The instruments have a basic accuracy of ±2% at 20°C. The instruments are waterproof and dustproof to IP54. This helps maintain accuracy and ensures maximum reliability in harsh environments.

OPERATION

Refer to Safety Warnings before using the instrument

Testing is automatically inhibited if:

- An external voltage >25V is present when switched to any insulation range position.

- An external voltage >10V is present on all other ranges (excluding **OFF/V/mV**).

The external voltage is indicated on the display, on insulation ranges an audible bleeper will sound if a test is attempted.

Live Circuit Warning

When more than 25V is applied to the terminals in the insulation ranges, the instrument defaults to a voltmeter and gives an audible warning if a test is attempted. On all other switch positions except **OFF/V/mV** when more than 10V is applied the default voltmeter will be activated. Testing will be inhibited.

Voltage Testing on High Energy Systems

Use extreme care when using or measuring voltages above 30V, particularly in high energy systems. Fused test leads are available as optional accessories for local situations where increased protection is required.

Auto-shut Off

To conserve battery life, Auto-shut Off (preceded by a series of bleeps) operates after approx. 10 minutes of instrument inactivity on insulation, 5 minutes on all other ranges. If the instrument is switched on while holding the key, the Auto shut-Off time is extended to 60 minutes. To restore operation after Auto-shut Off, select **OFF** followed by the required switch position.

Note: *It is recommended that the instrument is switched to the* ***OFF*** *position when not in use.*

Backlight

The backlight is activated by pressing the key. The backlight will remain illuminated for approx. one minute before automatically switching off to conserve battery life, alternatively the key can be re-pressed.

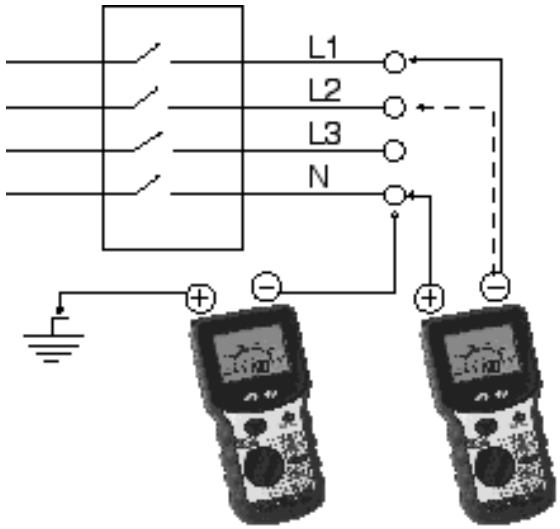

FIG.1

Insulation Tests (MΩ) (See fig.1)

The insulation tests apply a known voltage to the circuit under test and measure the resulting leakage current. The circuit under test must be completely **de-energised** and **isolated** before test connections are made.

Insulation tests are only initiated when the **TEST** button is pressed.

1. Set the range switch to the test voltage required.
2. Connect the test leads, first to the instrument, and then to the isolated item under test.
3. Press the **TEST** button to activate the test voltage. Take the reading.
4. Release the **TEST** button at the end of the test. (Press the **TEST** button if the **ltb** feature is enabled). The last reading will hold on the display.
5. Any capacitive circuits charged during a test will automatically discharge. If significant voltage remains the voltage warning will occur and the voltage present displayed.
6. Remove the test leads only when no voltage is indicated.

Locking Test Button (ltb)

When it is desired to do a long insulation test, the test can be 'locked on' by pressing the ⎓↓ key while the test button is held down. The warning ⚠ will appear on the display and both buttons may be released whilst the test continues. The next press of the test button will terminate the test.

Note: *There is a short delay on the first operation of '1000 V' range, each time the range is selected. This is to prevent accidental application of 1kV.*

The MΩ range features a leakage current display. Leakage current is the value of current that flows during the insulation test. To view the leakage current press the ↵🔒 key. To view insulation resistance press the ↵🔒 key again.

Good procedure whilst Insulation Testing

Care must be taken when taking measurements greater than a few GΩ. The leads must be clean dry and in good condition. They must also not be allowed to tangle. It is also advisable that the switched probe SP1 is not used as the accuracy at high value measurements is not guaranteed. The instrument should also be clean and dry with particular attention paid to the terminals. Also attempt to reduce any leakage that may give erroneous results on the item under test.

Polarisation Index Testing

Polarization Index (**PI**) is the term applied to the Dielectric Absorption Ratio when resistance values are measured after 1 minute and again after 10 minutes. Polarization Index is then the resistance value after 10 minutes divided by the resistance value after 1 minute. The test can be run at any voltage. More detailed information on **PI** Testing and value assessment can be found in AVO International publications listed in the Accessories page.

Automatic Discharge

When the **TEST** button is released after an insulation test (or re-pressed if **Itb** feature is enabled), a 200kΩ load is automatically switched across the terminals to discharge the item under test. Any voltage present will be indicated on the display so that the discharge can be monitored.

Typical Terminal Voltage Characteristics

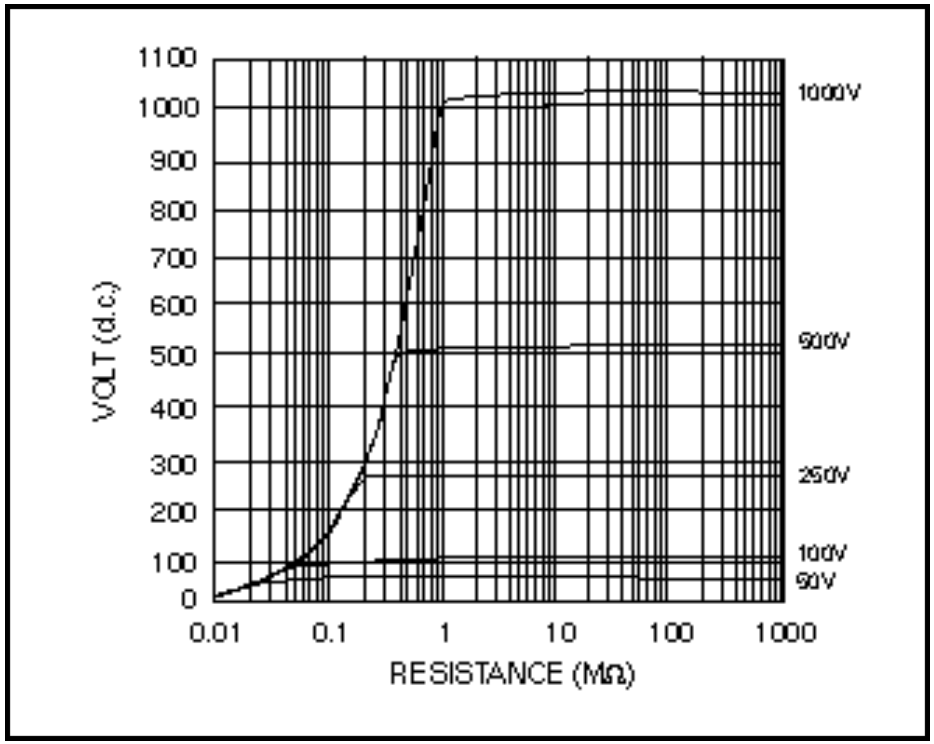

Continuity Testing (Ω) (See fig.2)

The continuity tests are activated when the probes make contact of less than a few kΩ. The test operates without the need to press the **TEST** button. When the test leads are removed the reading will hold for a few seconds and then reset. To recall the last result press the key. This range is not suitable for diode testing since the automatic contact detector will not be activated when connected to a diode.

1. Set the selector switch to Ω.
2. Connect the test leads.
3. The test will activate automatically.
4. After the test probes are disconnected, the reading will be held for a few seconds.

Zeroing of Test Lead Resistance

The resistance of the test leads can be nulled on the continuity range (up to 9,99Ω). The null information is retained in non-volatile memory and so will be remembered when the instrument is switched off.

1. Select the Continuity range.
2. Short the test leads across a known good conductor using prods.
3. When the reading has stabilised, press the **TEST** button. The zero offset symbol will appear.
4. To release the zero offset press the test button again.

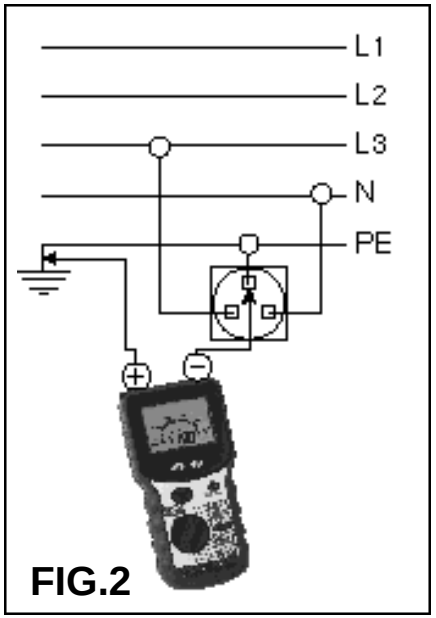

FIG.2

The continuity range features a range lock facility. To **LOCK** the continuity range press the key, the **LOCK** symbol will appear. To scroll through the available ranges press the key. To de-select the **LOCK** feature hold the key down.

Possible sources of error
Measurements and results can be effected by the following:

- The impedance of operating circuits connected in parallel
- Impedance such as inductors that vary during the measurement
- A poor connection to the circuit under test.

Continuity Bleeper

The continuity bleeper sounds continuously when less than 5 Ω is detected. Short bleeps will sound for resistances lower than a few kΩ and above 5Ω.

1. Set the selector switch to
2. Connect the test leads.

Display:	*Audible:*
<5Ω	continuous bleep
<3kΩ	short bleep
>3kΩ	no bleep

Resistance Tests (kΩ)

This is a low voltage (5 V) low current (25 µA) test for sensitive electronic equipment. It operates in the same way as the continuity ranges.

1. Set the selector switch to kΩ.
2. Connect the test leads.
3. The test will activate automatically.

The kΩ range features a range lock facility. To **LOCK** the kΩ range press the key, the **LOCK** symbol will appear. To scroll through the available ranges press the key. To de-select the **LOCK** feature hold the key down.

The resistance range is protected by a high impedance method and therefore if the instrument is connected to a live circuit the fuse will not blow as on the insulation, continuity and buzzer ranges. The instrument will merely indicate the applied over-voltage.

Diode Testing
This range can also be used for diode testing, the positive terminal being the source of the test current. A forward biased semi-conductor junction will typically measure 15 to 30kΩ, and a reverse junction much higher. These features together with the small test current and wide measurement range

(0,01kΩ to 10000kΩ) make the resistance range very useful for general purpose testing.

Voltage Tests (V)

If >1V a.c. or d.c. is present at the terminals the measured voltage is indicated on the display. The voltage display will function within specification even if the fuse has blown.
If the voltmeter operation is in question, test the voltmeter on a known source.

1. Set the selector switch to V.
2. Connect the test leads.
3. After a short settling time, the reading will be displayed automatically.

To view the frequency of the a.c. V being measured press the key. The frequency will be displayed in the range 16Hz-460Hz. To view a.c. V press the key again.

Millivolt Tests(mV)

The measured a.c. or d.c. voltage is indicated on the display.

1. Set the selector switch to mV.
2. Select either a.c. or d.c. mV using the key.
3. Connect the test leads.
4. After a short settling time, the reading will be displayed automatically.

Note: *Live circuit warning does not function on mV range.*

Zeroing of d.c. mV (no a.c. mV zero facility)

To zero the d.c. mV range, short the leads together in the d.c. mV position, wait for the reading to settle and then press the **TEST** button. Up to 9,9mV can be zeroed on the d.c. mV range. The symbol will appear to indicate the zero has been adjusted.

1. Select the d.c. mV range.
2. Short the test leads together.
3. When the reading has stabilised, press the **TEST** button. The zero offset symbol will appear.
4. To release the zero offset press the **TEST** button again.

To view the frequency of the a.c. mV being measured press the key. The frequency will be displayed in the range 16Hz-460Hz. To view a.c.

mV press the key again. For inputs less than 10mV frequency is not displayed.

Capacitance Tests (uF) (BMM2580 only)

The measured capacitance is indicated on the display.

1. Set the selector switch to uF.
2. Connect the test leads to the circuit under test.
3. After a short settling time, the reading will be displayed automatically.

Zeroing of uF

To zero the uF range, disconnect the leads, wait for the reading to settle and then press the **TEST** button. Up to 10,0nF can be zeroed on the **uF** range. The symbol will appear to indicate the zero has been adjusted.

1. Select the **uF** range.
2. Disconnect the test leads from the circuit under test.
3. When the reading has stabilised, press the **TEST** button. The zero offset symbol will appear.
4. To release the zero offset press the test button again.

The range is suitable for the testing of discrete components and short low interference level signal lines. If electrolytic capacitors are being tested then the red lead should be connected to +ve of the capacitor. This range is not suitable for checking capacitance of signal lines which are subject to high levels of a.c. interference.
When the test is started – – – will show on the display, if there is excessive noise this symbol will remain or flash indicating that there is too much noise for a result to be reached.

Milliamps Tests (mA)

Because of the low source impedance associated with current measuring this test has an added feature ensuring that when the range is first entered the default voltmeter is visible. Testing will be inhibited if more than 25V is present at the terminals. To start testing the **TEST** button should be pressed and held down for approx. 2 seconds to activate the **mA** range. Once activated, the **TEST** button no longer needs to be used and the measured value will be displayed automatically. To switch the display between a.c. and d.c. press the

key.

1. Set the selector switch to **mA**.
2. Connect the test leads.
3. Select either a.c. or d.c. **mA** using the key.
4. Press and hold down the **TEST** button for approx. 2 seconds.
5. After a short settle time, the reading will be displayed automatically.

To view the frequency of the a.c. mA being measured press the key. The frequency will be displayed in the range 16Hz-460Hz. To view a.c. mA press the key again. For inputs less than 10mA frequency is not displayed.

Storing Results on MΩ and Ω (RCL)

After an insulation test or continuity test the result is displayed on the screen, this may be saved with additional information. A circuit number (**1-99**) may be assigned and circuits may be grouped using the distribution board feature. In this way, when downloading to AVO PowerSuite, the results can be easily split into different test schedules. When the results are displayed or printed, a change in the distribution board is indicated.

Changing Distribution Boards (DB)

Before a test the distribution board number may be changed as follows:-

1. Move the rotary selector switch to the RCL position. The code rcl is displayed.
2. Press the key. The currently selected DB code is displayed, e.g. **d01**.
3. This number may be changed using the and keys to display the required number.
4. The number can be accepted by pressing the key, or aborted by pressing the **EXIT** button.
5. When the number is saved the code **Std** is displayed (accompanied by a long bleep) to confirm that the data has been saved.

Testing may now continue with all subsequent results associated with the new distribution board number.

Storing a result

On completion and display of the measurement:-

1. Press and hold the key. After about 1 second, a bleep will be heard. For both Continuity and Insulation, a code, as given in the following table is displayed. This code is used to describe the circuit tested and can accordingly be modified by the user.
2. The code may be changed by pressing the and keys.
3. The code may be accepted by pressing the key, or aborted by pressing the **EXIT** button.
4. The circuit number is then displayed as 2 digits e.g. c01.

Note:- *Many different tests may be saved under the same circuit number.*

5. The circuit number may be changed by pressing the and keys to display an appropriate number.
6. The number can be accepted and the results saved by pressing the key, or the procedure aborted by pressing the EXIT button.
7. When the result is saved, the code **Std** is displayed (accompanied by a long bleep) to confirm that the data has been saved. The display of **FULL** indicates that there is no more test storage. Approx. 300 results can be stored in memory.

Test to be Saved	**Display code**	**Meaning**
Continuity	r1	Single CCT
	r2	Single CCT
	rr1	Ring CCT
	rr2	Ring CCT
	rrn	Ring CCT
	r12	R1+R2 ReturnCCT
Insulation	n_e	N-PE
	L_n	L-N
	L_E	L-PE
	L_L	L-L

Delete all data

1. Move the rotary selector switch to the **RCL** position. The code rcl is displayed.
2. Press the and keys together. The code **dEL** is displayed.
3. Confirm that the data is no longer required by pressing the 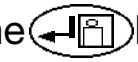 key or abort by pressing any other key. The code **rcl** is displayed.

Print Results (see Setup Modes)

1. Connect printer and the instrument with a serial printer lead.
2. Move the rotary selector switch to the **RCL** position. The code **rcl** is displayed.
3. Commence the printout by pressing the **TEST** button. Abort at any time by pressing and holding the key. The code **rcl** is displayed.

Retrieve Stored Results

It is possible to view previously stored test results by switching the rotary switch to the **RCL** position.

1. Move the rotary selector switch to the **RCL** position. The code **rcl** is displayed.
2. Select the required distribution board by pressing the and keys. The distribution board numbers are shown in the order that the results were stored. A long bleep is sounded when the end of the list is reached.
3. Press the key to list the circuit numbers used in the currently displayed distribution board or press the **EXIT** button to return to the **RCL** display.
4. Select the required circuit number by pressing the and keys. The circuit numbers are shown in the order that the results were stored. A long bleep is sounded when the end of the list is reached.
5. Press the **EXIT** button to return to the distribution board selection screen, or press the key to show the stored test codes. The following codes are used to identify test results:-

Code	**Meaning**
Con	Continuity Test
InS	Insulation Test

6. Select the required test by pressing the and keys. The tests are shown in

the above order. Hold a key down to auto-repeat. A long bleep is sounded when the end of the list is reached.

7. Press the **EXIT** button to return to the circuit number selection screen, or press the key to scroll through the stored test results, together with any additional connection information.

Download to PC

The BMM series has been designed to be used with AVO Powersuite for Windows which will accept the test results and enable the production of various certificates, including Periodic Inspection and Completion. The CD supplied with the instrument contains AVO Download Manager Program. This enables stored and data-logged results to be downloaded to a PC, the creation of simple test report files which may be exported to other applications and used to create data back-ups or reports/certificates. Download manager also enables certain changes to be made to your instrument setup such as changing the 2nd language of the printouts. The CD contains a user guide giving you full instructions on the use of Download Manager.

Cable Configuration

Normally, a double-ended 9-way 'D' female socket lead suitable for connecting PC to PC is required. This lead should not exceed 3m in length. A lead is available as an accessory, or one can be made up as follows:–

Signal	Insulation Tester	9-way 'D'	25-way 'D'
Rx	2	3	2
Tx	3	2	3
DSR	6	4	20
GND	5	5	7

Datalogging

Datalogging means the automatic recording of measurements at regular intervals over an extended period, for viewing at a later time. Results are held in the internal memory of the tester, but can only be extracted by means of a PC connected via the RS232 port.

Storage v. Datalogging Comparison.

By storage, we mean the saving to memory of results one-by-one as tests are performed. Each result has to be individually saved after associating it with user-selectable connection data and circuit number, along with a previously chosen distribution board number. However, when data logging is running, results are automatically and continuously saved to memory and no other information is recorded.

Storage and logging are mutually exclusive functions. The instrument cannot be set up to perform both operations at any given time. If a result is stored, then all logged data is erased, and vice versa. Also, only one set of logged data can be held in memory. A new logging session will erase the previous data. This differs in behaviour from the storage function, in which data from successive tests accumulates in the memory until it is full. Another difference between storage and logging is that the former applies only to insulation and continuity testing, whereas all types of measurement can be logged (buzzer range excluded).

Starting a logging session

Once logging has been enabled and the interval set up, a session of data-logging can begin. (see Setup Modes)

1. Hold down the key and turn the rotary switch to the desired function.
2. Release the key. The message log will be seen. To confirm that logging is required, press the display key and a confirming message will be shown briefly.
3. Pressing **EXIT** will cancel logging and off will be displayed.

If data-logging is turned on, it will commence as soon as the test starts. That is, immediately on volts, millivolts, ohms, kΩ and capacitance functions, or when the test button is pressed on insulation and milliamps ranges. On milliamps or millivolts functions, press the key if required, after logging has started.

Stopping a logging session

While a logging session is running, it can be stopped at any time by turning the range switch. Any data logged up to that point will be retained.

Alternatively, logging can be left running and will stop automatically a short while after the memory becomes full.

The number of results which can be logged is about 300, after which the message ‘full’ will be flashed on the display for a few minutes. The instrument will then shut down.

Other considerations

Note that the batteries may not last through the whole logging session, depending on their condition and on the log interval which has been set. If the batteries should fail, any results already logged will be retained. Note also, that if the **TEST** button has been set for non-latching operation, this will be temporarily overridden during logging of insulation results, giving a press-to-start, press-to-stop action. The **TEST** button’s mode of operation will return to its original setting after the logging session has finished.

Viewing logged data.

Logged results can only be retrieved via the instrument’s RS232 port, using a PC connected via a serial cable. The disk supplied with the instrument carries a programme capable of handling the data. The method is similar to that for ‘downloading’ stored results. For further information see the section entitled “Download to PC”. Note that on millivolts d.c. and milliamps d.c. measurements, the frequency result is always set to zero. On millivolts a.c. and milliamps a.c. measurements, the frequency result is set to zero if the frequency could not be measured.

Setup Modes

Serial Printer configuration

The printer should be set to 9600 baud, 8 bit data, no parity and 1 stop bit. This instrument uses a special isolated serial interface which is powered from the PC or printer. In the unlikely event that your PC or printer is not able to power the interface, it will be necessary to provide an additional supply. Contact **AVO Product Support** for details.

Printer Setup Mode

The instrument cannot respond to a busy signal

given by a printer, and therefore waits at the end of each line. This time ("Printer delay time") and the printer report language can be changed.

1. Press and hold the key then turn the rotary selector switch from the **OFF** position to the **RCL** position. The code **Pdt** is displayed.
2. Release the key.

To change the Printer speed

1. Toggle the key to scroll through and display the code **Pdt**
2. Press the key. The current setting is displayed.
3. Toggle the and keys until the required setting is displayed.
4. To save the new setting, press the key. The bleeper sounds and **std** is displayed. To abort the new setting, press the **EXIT** button.

To select the printer language

1. Press the key to scroll through and display the code **lng**.
2. Press the key. The current printer report language is displayed as 1 (English) or 2 (as given on the type label on the User Guide cover).

Note: *Language 2 can be changed – see below.*

3. Press the key until the required language setting is displayed
4. To save the new setting, press the key. The bleeper sounds and is **Std** displayed. To abort the new setting, press the **EXIT** button.

Changing the Second Printer Language

Language 2 can be changed using AVO Download Manager Program supplied with your instrument. Full instructions are contained in the User Guide with the CD.

Data-logging

Enabling/disabling data-logging:

The factory setting is that logging is disabled and storage is enabled.

1. Turn the range knob to '**RCL**' while holding down the key. **Pdt** will be displayed.
2. Press the key until log is showing
3. Press the key to show the current status of the logging function, i.e on or off.
4. Pressing the key toggles the setting between on and off.
5. Press the key to accept the setup, or the **EXIT** button to quit.

Setting the data-logging interval.

1. While log is being displayed, press the key. **Int** will appear on the display.
2. Press the key to see the value of the logging interval (in seconds)
3. Set the interval in 10 second steps with the and keys (max. value 1990 seconds, min. value 10 seconds)
4. Press the key to accept the new value, or the **EXIT** button to quit.
5. Press the **EXIT** button again to escape from the logging setup screens. The display will show **rcl**.

Using the MEGGER SP1 Switched Probe

Operation

The **MEGGER SP1** is an accessory for designated MEGGER installation test instruments. When fitted in the specially designed connector, in place of the existing 'Low' lead, the SP1 acts as a remote test button to operate the instrument and as a 'Low' probe. This simplifies instrument control and two-handed probing. The SP1 is suitable for use with MEGGER insulation test instruments up to 1kV output test voltage.

Safety

Meets the safety requirements for double insulation to IEC1010-2-031 (1995), EN61010-2-031 (1995), IEC 1010-1 (1995), EN61010-1 (1995) Category III* 300 V phase to earth and 500V phase to phase. The probe is fitted with an internal, non-replaceable fuse, to protect the user should the probe be used accidentally in conjunction with a testlead in the low terminal.

*Relates to transient overvoltage likely to be found in fixed installation wiring.

⚠ **Do not use the probe if any part of it is damaged.**

Battery Replacement

When the low battery symbol ⊣⊢ appears, the cells are nearly exhausted and should be replaced as soon as possible. Use Alkaline cells IEC LR6 (AA) or NiCd rechargeable. To install or replace the cells, disconnect the test leads, switch the instrument to **OFF** and loosen the captive screws on the rear of the battery compartment. Remove the cover and disconnect the battery holder from the battery leads. Ensure that the replacement cells are

fitted with the correct polarity in accordance with the label in the battery holder. Reconnect the battery holder to the battery leads. Replace and re-secure the battery compartment cover. Remove the cells if the instrument is not going to be used for an extended period of time.

Fuse Checking and Replacement

To check the instrument fuse, switch to an insulation range and press the **TEST** button. The symbol will appear if the fuse is ruptured. To replace the fuse, disconnect the test leads, switch the instrument **OFF** and loosen the captive screws holding the battery compartment cover in place. Remove the cover and replace the fuse. Replace and re-secure the battery compartment cover.

Specification

(All quoted accuracies are at +20ºC.)

INSULATION RANGES

Nominal Test Voltage (d.c.): 250V,500V,1000V(BMM2500)
50V,100V,250V,500V,1000V(BMM2580)

Test voltage accuracy: +15% maximum on open circuit

Short circuit current: < 2 mA

Test Current on load: 1mA at min. pass value of insulation specified in BS7671, HD384 and IEC 364, 2mA max.

Accuracy:

(BMM2500)

Range	Full Scale	Accuracy
1000V	20GΩ	± 2% ± 2 digits ± 0,2% per GΩ
500V	10GΩ	± 2% ± 2 digits ± 0,4% per GΩ
250V	5GΩ	± 2% ± 2 digits ± 0,8% per GΩ

(BMM2580)

Range	Full Scale	Accuracy
1000V	200GΩ	± 2% ± 2 digits ± 0,2% per GΩ
500V	100GΩ	± 2% ± 2 digits ± 0,4% per GΩ
250V	50GΩ	± 2% ± 2 digits ± 0,8% per GΩ
100V	20GΩ	± 2% ± 2 digits ± 2,0% per GΩ
50V	10GΩ	± 2% ± 2 digits ± 4,0% per GΩ

Note: *Above specifications only apply when high quality silicone leads are being used.*

Measuring Range:
0,01MΩ to 200GΩ (0-100GΩ on analogue scale).
EN61557 Operating range: 0,10MΩ to 1,00GΩ
Leakage Current: 10% ±3digits

CONTINUITY

Measuring Range: 0,01Ω to 99,9Ω (0 to 10Ω on analogue scale)
EN61557 Operating range: 0,10Ω to 99,9Ω
Accuracy: ±2% ±2 digits
Open circuit voltage: 5V ±1V
Test current: 210mA ±10mA (0-2Ω)
Zero offset at probes: 0,10Ω typical

Lead resistance zeroing: Up to 9,99Ω
Noise rejection: 1V rms 50/60Hz
Buzzer: Operates at less than 5Ω (approx).

RESISTANCE

Measuring Range: 0,01kΩ to 9,99MΩ (0 to 100MΩ on analogue scale)
Accuracy: ±3% ±2 digits
Open circuit voltage: 5V ±1V
Short circuit current: 25µA ±5 µA

VOLTAGE

Measuring Range: ±1V to ±500V (0 to 1000V on analogue scale)
Accuracy: 0-500V d.c. ±2% ±3 digit
0-500V a.c (50/60Hz) ±2% ±3 digits
0-500V 400Hz a.c. ±5% ±3 digits
Input resistance: approx 200kΩ.
Detector Threshold: 1V

MILLIVOLTS

Measuring Range: ±0,1mV to ±1999mV (0 to 1000mV on analogue scale)
Accuracy: 0,1mV to 10mV d.c. or a.c. (50/60Hz) ±2% ±5 digits
10mV to 1999mV d.c. or a.c. (50/60Hz) ±2% ±3 digits
0,1mV to 10mV a.c. (16-460Hz) ±5% ±7 digits
10mV to 1999mV a.c. (16-460 Hz) ±5% ±5 digits
d.c. milliVolts zeroing: Up to 9,9mV
Input resistance: >3MΩ

CAPACITANCE

Measuring Range: 0,1nF to 9,99uF
Accuracy: ±3% ±2 digits ±0,2nF
uF zeroing: Up to 10nF

MILLI-AMPS

Measuring Range: 0,1mA to 500mA (0 to 1000mA on analogue scale)
Accuracy: 0,1mA to 10mA d.c. or a.c. (50/60 Hz) ±2% ±5 digits
10mA to 500mA d.c. or a.c. (50/60 Hz) ±2% ±3 digits
0,1mA to 10mA a.c. (16-460 Hz) ±5% ±7 digits
10mA to 500mA a.c. (16-460 Hz) ±5% ±5 digits

FREQUENCY

Measuring range: 16Hz to 460Hz
Accuracy: ±1% ±1digit

Basic and service errors for Insulation and Resistance ranges.

The basic error is the maximum inaccuracy of the instrument under ideal conditions, whereas the service error is the maximum inaccuracy taking into effect of battery voltage, temperature, interference, and system voltage and frequency, where applicable. After determining the service error, we can then calculate the measurement range. This is the range of measurement over which the error in service is less than 30% of the reading. Digital instruments are affected by the number of digits error – for example a value 0,10Ω measured with the continuity range may give a display in the range 0,07Ω to 0,13Ω which is a maximum error of 30%. Therefore the measurement range measuring low resistance is 0,10Ω to 99,9Ω. When checking that a measurement does not exceed a limit, the service error needs to be taken into account and these tables enable this to be done quickly and easily. These will guarantee that the value being measured is greater than or less than the limit value specified as appropriate.

Insulation Resistance – MΩ

Limit	Min. Indicated Reading	Limit	Min. Indicated Reading
0,10	0,14	2,00	2,12
0,20	0,25	3,00	3,16
0,30	0,35	4,00	4,20
0,40	0,46	5,00	5,24
0,50	0,56	10,00	10,8
0,60	0,66	20,00	21,2
0,70	0,77	30,00	31,6
0,80	0,87	40,00	42,0
0,90	0,98	50,00	52,4
1,00	1,08	100,00	94,0

Continuity Resistance – Ω

Limit	Max. Indicated Reading	Limit	Max. Indicated Reading
0,10	0,06	2,00	1,88
0,20	0,15	3,00	2,84
0,30	0,25	4,00	3,80
0,40	0,34	5,00	4,76
0,50	0,44	10,00	9,56
0,60	0,54	20,00	18,8
0,70	0,63	30,00	28,4
0,80	0,73	40,00	38,0
0,90	0,82	50,00	47,6
1,00	0,92	100,00	92,0

SAFETY

The instruments meet the requirements for double insulation to IEC 1010-1 (1995), EN 61010-1 (1995) to Category III*, 300 Volts phase to earth (ground) and 440 Volts phase to phase, without the need for separately fused test leads. If required, fused test leads are available as an optional accessory.

* Relates to the transient over-voltages likely to be met in fixed wiring installations.

Complies with the following parts of EN61557, Electrical safety in low voltage systems up to 1000V a.c. and 1500V d.c. – Equipment for testing, measuring or monitoring of protective measures:-

Part 1 - General requirements
Part 2 - Insulation resistance
Part 4 - Resistance of earth connection and equipotential bonding

FUSE

500mA 500V, 32x 6mm Ceramic HBC 10kA minimum.

E.M.C.

The instruments meet EN61326-1

POWER SUPPLY

Battery Type:	6x1,5V Alkaline cells IEC LR6 type or 1.2V NiCd re-chargeable cells.
Battery Life (typical):	2100 5-sec 1kV insulation tests 3200 5-sec 500V insulation tests 4000 5-sec 250V insulation tests 2700 5-sec continuity tests 4700 5-sec kΩ tests

ENVIRONMENTAL CONDITIONS

Operating range:	-5 to +40°C
Operating humidity:	90% RH at 40°C max.
Storage temperature range:	-25 to +65°C
Calibration Temperature:	+20°C
Maximum altitude:	2000m
Dust and water protection:	IP54
Temperature coefficient:	<0,1% per °C
WEIGHT:	742g
DIMENSIONS:	110mm x 220mm x 45mm
CLEANING:	Wipe with a clean cloth dampened with soapy water or Isopropyl Alcohol (IPA)

ACCESSORIES

Supplied:	Part Number
Test lead set	6220-437
Test-&-carry case	6420-112

Optional:	Part Number
Fused lead set, FPK8	6111-218
Switch Test Probe SP1	6220-606
Test Record Cards (Pack of 20)	6111-216
AVO PowerSuite	6111-237
AVO NiceOne	6111-403
9-way Serial Lead	25955-025

Publications:

‘A Stitch in Time’	AVTM21-P8B
‘Testing Electrical Installations”	6172-129

Repair and Warranty

The instrument circuit contains static sensitive devices, and care must be taken in handling the printed circuit board. If the protection of an instrument has been impaired it should not be used, and be sent for repair by suitably trained and qualified personnel. The protection is likely to be impaired if, for example, the instrument shows visible damage, fails to perform the intended measurements, has been subjected to prolonged storage under unfavourable conditions, or has been exposed to severe transport stresses.

New Instruments are Guaranteed for 3 Years from the Date of Purchase by the User.

Note: Any unauthorized prior repair or adjustment will automatically invalidate the Warranty.

Instrument Repair and Spare Parts

For service requirements for MEGGER® Instruments contact:-

AVO INTERNATIONAL or
Archcliffe Road
Dover
Kent, CT17 9EN.
England.
Tel: +44 (0) 1304 502243
Fax: +44 (0) 1304 207342

AVO INTERNATIONAL
Valley Forge Corporate Center
2621 Van Buren Avenue
Norristown, PA 19403
U.S.A.
Tel: +1 (610) 676-8579
Fax: +1 (610) 643-8625

or an approved repair company.

Approved Repair Companies

A number of independent instrument repair companies have been authorised for repair work on most MEGGER instruments, using genuine MEGGER spare parts. Consult the Appointed Distributor/Agent regarding spare parts, repair facilities, and advice on the best course of action to take.

Returning an Instrument for Repair

If returning an instrument to the manufacturer for repair, it should be sent freight pre-paid to the appropriate address. A copy of the invoice and of the packing note should be sent simultaneously by airmail to expedite clearance through Customs. A repair estimate showing freight return and other charges will be submitted to the sender, if required, before work on the instrument commences.

MULTIMÈTRES D'ISOLATION
MEGGER BMM2500

Guide de l'utilisateur

MEGGER®

CONTENU

Avertissements de Securite 31

Description Generale **32**

Fonctionnement 34
- Tests de Continuité 37
- Alarme de Continuité 38
- Tests en Millivolts 39
- Tests de Capacitance 40
- Tests en Milliampères 41
- Stocker les Rèsultats 41
- Consignation de Donneés 45
- Modes de Configuration 47

Specifications 51

Reparations et Garantie 56

Les symboles utilisés sur l'instrument sont:

Attention, risque de décharge électrique.

Attention, se reporter au guide de l'utilisateur.

Equipement protégé dans son ensemble par une double isolation (Classe II).

Equipement conforme aux Directives européennes en vigueur.

Equipement à ne pas raccorder à des installations >500V.

AVERTISSEMENTS DE SECURITE

- ★ Les avertissements et précautions de sécurité doivent être lues et comprises avant que l'instrument soit utilisé. Ils doivent être suivis pendant l'utilisation.
- ★ L'alimentation du circuit testé doit être coupée et il doit être isolé avant que les connexions soient faites, sauf pour les mesures de tension.
- ★ Les connexions de circuit ne doivent pas être touchées pendant un test.
- ★ Après les tests d'isolation, il faut laisser les circuits à condensateurs se décharger avec de déconnecter les fils de tests.
- ★ L'avertissement de circuit sous tension et le déchargement automatique sont des caractéristiques supplémentaires et ne devront pas être considérés comme des substituts à des pratiques normales de travail en sécurité.
- ★ Les fusibles de remplacement doivent être du bon type et de la bonne résistance. Si l'on installe des fusibles de résistance incorrecte, ceci causera l'endommagement de l'instrument en cas de surcharge.
- ★ Les fils de test, ainsi que les pinces crocodile, doivent être en bon état, propres et de pas présenter une isolation fendue ou cassée.
- ★ Les autorités de sécurité britanniques recommandent l'utilisation de fils de tests pour la mesure de tension sur des systèmes à haute énergie.

REMARQUE

LES INSTRUMENTS DOIVENT SEULEMENT ÊTRE UTILISÉS PAR DES PERSONNES FORMÉES CONVENABLEMENT ET COMPÉTENTES. NOUS RAPPELONS AUX UTILISATEURS DE L'ÉQUIPEMENT ET/OU À LEURS EMPLOYEURS QUE LES LOIS SUR LA SANTÉ ET LA SÉCURITÉ EXIGENT QU'ILS EFFECTUENT DES ÉVALUATIONS DE RISQUE VALIDES DE TOUT MATÉRIEL ÉLECTRIQUE AFIN D'IDENTIFIER TOUTE SOURCE POTENTIELLE D'UN DANGER ÉLECTRIQUE ET DE RISQUE DE BLESSURE D'ORIGINE ÉLECTRIQUE TELLE QUE LES COURT-CIRCUITS. LÀ OÙ LES ÉTUDES MONTRENT QUE LE RISQUE EST SIGNIFICATIF, ALORS LES FILS DE TESTS À FUSIBLES CONFORMÉMENT À LA NOTE DE RECOMMANDATION HSE GS38 SUR L' "EQUIPEMENT DE TEST ÉLECTRIQUE POUR UNE UTILISATION PAR DES ÉLECTRICIENS" DOIVENT ÊTRE UTILISÉS.

DESCRIPTION GENERALE

Les instruments de la série **BMM2500 MEGGER** sont des testeurs de continuité et d'isolation alimentés par batteries, avec une capacité de mesure d'une continuité de 0,01Ω à une isolation de 200GΩ.

Présentant des fonctions multi-voltage, les instruments utilisent pleinement la technologie des microprocesseurs et un grand écran à cristaux liquides associant les affichages analogique et numérique. L'affichage analogique a l'avantage d'indiquer des tendances et des variations de mesures, tandis que l'affichage numérique fournit des résultats directs précis. L'écran est à fond lumineux, ce qui donne une visibilité claire même dans des conditions de basse luminosité.

Les instruments de la série BMM2500 ont la capacité unique de pouvoir mesurer des tensions à une précision de 0,1mV. Ceci donne à l'utilisateur la possibilité d'installer une large gamme de transducteurs pour développer davantage les capacités des instruments de la série BMM, par exemple les mesures de température ou d'humidité.

Un connecteur personnalisé sur le dessus de l'instrument permet le recours à une sonde à commutateur optionnelle **MEGGER SP1** pour une utilisation de sonde à deux mains.

Les gammes à 250V, 500V et 1000V peuvent être utilisées pour tester des installations électriques conformes aux normes britanniques BS7671 (Réglementation sur les installations électriques IEEE, 16ème édition) IEC364 et HD384, dans la mesure où chaque gamme a une intensité minimum de 1mA aux valeurs de passage minimales d'isolation définie dans ces documents. La gamme à 100V (BMM2580) est idéale pour tester les équipements de télécommunications qui seraient endommagés par des tensions plus élevées. La gamme à 50V (BMM2500) est utile pour tester les équipements sensibles, tels que des composants électroniques et des périphériques informatiques.

Les instruments de la série BMM2500 ont une fonction intensité qui per-met de mesurer jusqu'à 500mA. Ceci, associé aux gammes Ω, V et mV, signifie que l'instrument peut être utilisé de

manière réaliste dans des situations où, auparavant, un multimètre aurait été nécessaire. Pour des intensités plus élevées, un limiteur de courant est disponible en option.

Les instruments de la série BMM2500 ont une interface RS232 intégrée, et permettront le stockage et le déchargement de résultats vers un PC. Les instruments sont livrés avec le logiciel nécessaire pour décharger les résultats et les mettre en tableau. Le format de déchargement est aussi compatible avec AVO PowerSuite, ce qui permet aux instruments de faire partie d'un système de certification et de tests intégré. Les instruments de la série BMM2500 ont également la capacité d'enregistrer les résultats sur un long laps de temps de sorte qu'on peut réaliser des mesures à long terme des systèmes.

Conçue suivant les normes IEC1010-1, la série BMM2500 est protégée contre la connexion à une alimentation de Catégorie III à 500V. Les instruments ont une précision de base de ±2% à 20°C. Les instruments sont étanches et ne prennent pas la poussière conformément à IP54. Ceci facilite le maintien de la précision et assure une fiabilité maximale dans des environnements difficiles.

FONCTIONNEMENT

Se reporter aux avertissements de sécurité avant d'utiliser l'instrument.

Les tests sont automatiquement bloqués si:

- Une tension externe >25V est présente lorsque l'équipement est mis dans toute position de la gamme d'isolation.
- Une tension externe >10V est observée sur toutes les autres gammes (sauf **ARRET/V/mV/RCL**).

La tension externe est indiquée sur l'écran et sur des gammes d'isolation un signal sonore retentit si on tente d'effectuer un test.

Avertissement de circuit sous tension
Lorsque l'on applique plus de 25V aux bornes dans les gammes d'isolation, l'instrument devient par défaut un voltmètre et émet un avertissement sonore si un test est tenté. Dans toutes les autres positions du commutateur sauf **ARRET/V/mV/RCL**, lorsque l'on applique plus de 10V le voltmètre par défaut sera activé. Les tests sont bloqués.

Tests de tension sur des systèmes à haute énergie
Prêter une attention extrême lors de l'utilisation ou de la mesure de tensions de plus de 30V, particulièrement dans des systèmes à haute énergie. Des fils de tests à fusibles sont disponibles en tant qu'accessoires optionnels pour des situations locales dans lesquelles une protection plus élevée est nécessaire.

Arrêt automatique
Pour préserver la durée de vie des batteries, un arrêt automatique (précédé d'une série de tonalités) se déclenche après environ 10 minutes d'inactivité de l'instrument en mode isolation, 5 minutes sur toutes les autres gammes. Si l'instrument est allumé en appuyant sur la touche , la période avant l'arrêt automatique est prolongée de 60 minutes. Pour rallumer après un Arrêt automatique, sélectionner ARRET suivi de la position du commutateur nécessaire.
Remarque: *Nous recommandons que l'instrument soit mis en position Arrêt lorsqu'il n'est pas en service.*

Fond éclairé
L'éclairage en fond est activé en appuyant sur la touche . Le fond éclairé fond restera allumé environ une minute avant de s'éteindre automatiquement pour préserver la durée de vie de la batterie. Il est également possible de ré appuyer sur la touche .

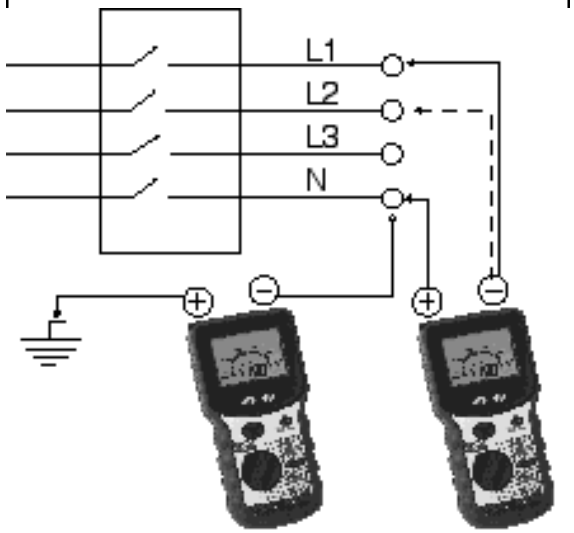

FIG.1

Tests d'isolation (MΩ) (voir fig. 1)

Les tests d'isolation appliquent une tension connue à un circuit testé et mesurent l'intensité de fuite qui en résulte. Le circuit testé doit être complètement **désactivé** et **isolé** avec que les connexions de tests soient faites.

Les tests d'isolation ne sont lancés que lorsque l'on appuie sur le bouton **TEST**.

1. Placer le commutateur de gamme sur la tension de test nécessaire.
2. Connecter les fils de test, d'abord à l'instrument, et ensuite à l'élément isolé à tester.
3. Appuyer sur le bouton **TEST** pour activer la tension de test, relever la mesure lue.
4. Relâcher le bouton de TEST à la fin du test. La dernière lecture restera sur l'écran.
5. Tous les circuits à condensateurs chargés pendant un test se déchargeront automatiquement. Si des tensions significatives persistent, l'alarme de tension se déclenchera et les tensions relevées s'afficheront.
6. Retirer les fils de test seulement lorsque aucune tension n'est indiquée.

Blocage du Bouton de tests (ltb)

Lorsque l'on souhaite effectuer un long test d'isolation, le test peut être "bloqué" en appuyant sur la touche ⎓↓ tout en maintenant le bouton de test enfoncé. L'avertissement ⚠ apparaîtra sur l'écran et les deux boutons pourront être relâchés pendant que le test se poursuit. Appuyer sur le bouton de test une fois de plus terminera le test.

Remarque: *Il y a un court délai lors de la première utilisation de la gamme '1000V', à chaque fois que la gamme est sélectionnée. Ceci vise à d'empêcher l'application accidentelle d'1KV.*

La gamme MΩ présente un affichage d'intensité de fuite. L'intensité de fuite est la valeur du courant qui circule pendant le test d'isolation. Pour visualiser l'intensité de fuite, appuyer sur la touche ↵. Pour visualiser la résistance d'isolation,

appuyer de nouveau sur la touche .

Bonne procédure pendant la réalisation de tests d'isolations

Il faut faire attention lors de la prise de mesures supérieures à quelques GΩ. Les fils doivent être propres, secs et en bon état. Il faut aussi leur empêcher de s'enchevêtrer. Nous recommandons également que la sonde à commutateur SP1 ne soit pas utilisée, puisque la précision pour des mesures à valeur élevée n'est pas garantie. L'instrument devrait également être propre et sec en apportant une attention particulière aux bornes. Essayer également de réduire une fuite qui pourrait donner des résultats erronés sur des éléments testés.

Tests de l'indice de polarisation

L'indice de polarisation (IP) est un terme appliqué au rapport d'absorption diélectrique lorsque les valeurs de résistance sont mesurées après 1 minute puis de nouveau après 10 minutes. L'indice de polarisation est alors la valeur de résistance après 10 minutes divisée par la valeur de résistance après 1 minute. Le test peut être effectué pour n'importe quelle tension. Des informations plus détaillées sur les tests d'IP et l'analyse des valeurs sont disponibles dans les publications internationales AVO énumérées dans les pages d'accessoires.

Déchargement automatique

Lorsque le bouton de TEST est relâché après un test d'isolation (ou renfoncé si la fonction ltb est activée), une charge de 200kΩ est automatiquement transférée à travers les bornes pour décharger l'élément sous test. Toute tension présente sera indiquée sur l'écran de sorte que le déchargement puisse être contrôlé.

Caractéristiques normales de tension aux bornes

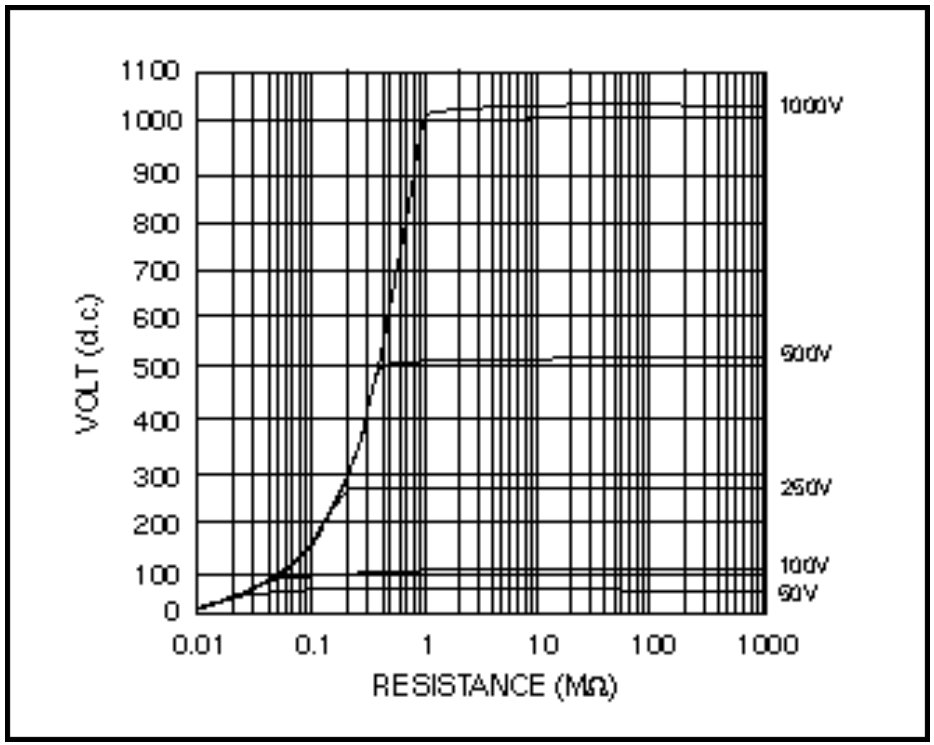

Tests de continuité (Ω) (voir fig.2)

Les tests de continuité sont activés lorsque les sondes entrent en contact à moins de quelques kΩ. Le test fonctionne sans avoir besoin d'appuyer sur le bouton TEST. Lorsque les fils de test sont retirés, l'affichage se maintient pendant quelques secondes puis est remis à zéro. Pour retrouver le dernier résultat, appuyer sur la touche . Cette gamme n'est pas adaptée aux tests de diodes puisque le détecteur de contact automatique ne sera pas activé lors de la connexion avec une diode.

1. Mettre le commutateur de sélection sur Ω.
2. Connecter les fils de tests.
3. Le test se déclenchera automatiquement.
4. Une fois que les sondes de tests sont déconnectées, l'affichage se maintient quelques secondes.

Mise à zéro de la résistance des fils de tests

La résistance des fils de tests peut être mise à zéro sur la gamme de continuité (jusqu'à 9,99Ω). L'information de mise à zéro est conservée dans la mémoire non-volatile et sera donc sauvegardée lorsque l'instrument sera éteint.

1. Sélectionner la gamme continuité.
2. Court-circuiter les fils de test à travers un bon conducteur en utilisant les poussoirs.

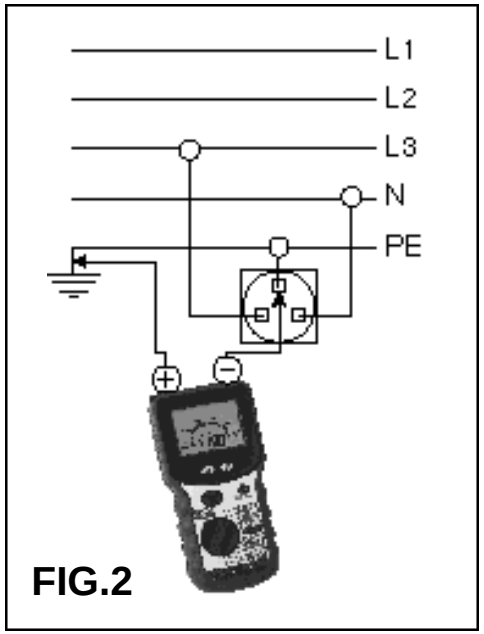

FIG.2

3. Lorsque la lecture sera stabilisée, appuyer sur le bouton de **TEST**. Le symbole de compensation à zéro va apparaître.
4. Pour libérer la compensation du zéro, appuyer de nouveau sur le bouton TEST.

La gamme de continuité comprend une fonction de blocage de gamme. Pour BLOQUER la gamme de continuité, appuyer sur la touche , le symbole de BLOCAGE va apparaître. Pour faire défiler les gammes disponibles, appuyer sur la

touche . Pour désengager la fonction de BLOCAGE, maintenir la touche enfoncée.

Sources possibles d'erreur

Les mesures et les résultats peuvent être affectés par:

- L'impédance de circuits en fonctionnement connectés en parallèle
- L'impédance telle que celle des inducteurs qui varie pendant les mesures
- Une mauvaise connexion au circuit testé.

Alarme de continuité

L'alarme de continuité sonne en continu lorsqu'elle détecte moins de 5Ω. Des bips courts retentissent pour des résistances inférieures à quelques kΩ ou supérieures à 5Ω.

1. Placer le commutateur de sélection sur
2. Connecter les fils de tests.

Affichage:	*Signal sonore:*
<5Ω	bip continu
<3kΩ	bip court
>3kΩ	pas de signal

Tests de résistance (kΩ)

C'est un test à basse tension (5V) et à basse intensité (25µA) pour un équipement électronique sensible. Il fonctionne de la même manière que les gammes de continuité.

1. Placer le commutateur de sélection sur kΩ.
2. Connecter les fils de tests.
3. Le test se lancera automatiquement.

La gamme KΩ comprend une fonction de blocage de gamme. Pour BLOQUER la gamme kΩ, appuyer sur la touche , le symbole de BLOCAGE apparaît. Pour faire défiler les gammes disponibles, appuyer sur la touche . Pour désengager la fonction de BLOCAGE, maintenir la touche enfoncée.

La gamme de résistance est protégée par une méthode à haute impédance, donc si l'instrument est connecté à un circuit sous tension, le fusible ne grillera pas comme sur les gammes d'isolation, de continuité et de sonnerie. L'instrument indiquera simplement la surtension appliquée.

Tests de diode

Cette gamme peut également être utilisée pour tester des diodes, la borne positive étant la source du courant de test. Le symbole de diode apparaîtra si la tension présente entre les bornes est dans les limites de jonction du semi-conducteur. Les caractéristiques ainsi que la petite intensité de test et la large gamme de mesure (de 0,01KΩ à 10000kΩ) rendent la gamme de résistance très utile pour des tests à des fins générales.

Tests de tension (V)

Si un courant alternatif ou continu de >1V est observé aux bornes, la tension mesurée est indiquée sur l'écran. L'affichage de tension fonctionnera conformément aux spécifications même si le fusible grille. Si le fonctionnement du voltmètre est en question, tester le voltmètre sur une source connue.

1. Mettre le commutateur de sélection sur V.
2. Connecter les fils de tests.
3. Après un bref instant de mise au point, la lecture apparaîtra automatiquement.

Pour visualiser la fréquence du courant alternatif en cours de mesure, appuyer sur la touche . La fréquence s'affichera dans la fourchette 16Hz-460Hz. Pour visualiser la tension du courant alternatif appuyer sur la touche de nouveau.

Tests en millivolts (mV)

La tension de courant alternatif ou continu est indiquée sur l'écran.

1. Placer le commutateur de sélection sur mV.
2. Sélectionner mV c.a ou c.c en utilisant la touche .
3. Connecter les fils de tests.
4. Après un bref instant de mise au point, la lecture apparaîtra automatiquement.

Remarque: *L'avertissement de circuit sous tension ne fonctionne pas sur la gamme de mV.*

Mise à zéro des mV en courant continu (pas de fonction de mise à zéro des mV en courant alternatif)

Pour remettre la gamme de mV en courant continu à zéro, raccorder les fils ensemble dans la position mV courant continu, attendre que la lecture s'établisse puis appuyer sur le bouton **TEST**. On peut remettre à zéro jusqu'à 9,9mV sur la gamme de mV en courant continu. Le symbole apparaîtra pour

indiquer que le zéro a été réglé.

1. Sélectionner la gamme de mV en courant continu.
2. Raccorder les fils de tests ensemble.
3. Lorsque l'affichage s'est stabilisé, appuyer sur le bouton de **TEST**. Le symbole de compensation du zéro apparaîtra.
4. Pour libérer la compensation du zéro, appuyer sur le bouton **TEST**.

Pour visualiser la fréquence du courant alternatif mV mesuré, appuyer sur la touche . La fréquence sera affichée dans la fourchette 16Hz-460Hz. Pour visualiser les mV du courant alternatif, appuyer de nouveau sur la touche . Pour des entrées inférieures à 10mV, la fréquence ne s'affiche pas.

Tests de capacitance (uF)

(seulement BMM2580)

La capacitance mesurée est indiquée sur l'écran.

1. Placer le commutateur de sélection sur uF.
2. Connecter les fils de tests au circuit testé.
3. Après un bref instant de mise au point, la lecture apparaîtra automatiquement.

Mise à zéro de uF

Pour mettre la gamme uF à zéro, déconnecter les fils, attendre que l'affichage se stabilise et appuyer sur le bouton de **TEST**. Jusqu'à 10,0uF peuvent être mis à zéro sur la gamme uF. Le symbole s'affichera pour indiquer que le zéro a été réglé.

1. Sélectionner la gamme uF.
2. Déconnecter les fils de tests du circuit testé.
3. Une fois l'affichage stabilisé, appuyer sur le bouton de **TEST**. Le symbole de compensation du zéro 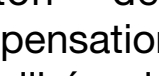 apparaîtra.
4. Pour libérer la compensation du zéro, appuyer de nouveau sur le bouton de **TEST**.

La gamme est adaptée aux tests de composants discrets et de lignes de signaux courts à niveau d'interférences faible. Si des condensateurs électrolytiques sont testés, le fil rouge doit être connecté à +ve sur le condensateur. La gamme n'est pas adaptée à la vérification de capacitance de lignes de signaux soumises à des niveaux d'interférence en courant alternatif élevés.

Lorsque le test commence – – – s'affiche sur l'écran, s'il y a un bruit excessif, ce symbole

restera ou clignotera pour indiquer qu'il y a trop de bruit pour pouvoir atteindre un résultat.

Tests en milliampères (mA)

En raison de la faible impédance de source associée à la mesure de d'intensité, ce test a une fonction supplémentaire, assurant que quand vous entrez pour la première fois dans la gamme, le voltmètre par défaut est visible. Les tests sont bloqués si l'on trouve plus de 25V aux bornes. Pour commencer les tests, il faut appuyer sur le bouton de **TEST** et le maintenir enfoncé pendant environ 2 secondes pour activer la gamme mA. Une fois activé, le bouton de **TEST** ne doit plus obligatoirement être utilisé et la valeur mesurée s'affichera automatiquement. Pour passer de l'affichage des courants alternatifs aux courants continus, appuyer sur la touche .

1. Placer le commutateur de sélection sur mA.
2. Connecter les fils de tests.
3. Appuyer sur et maintenir enfoncé le bouton de **TEST** pendant environ 2 secondes.
4. Sélectionner les mA soit en c.a. soit en c.c. avec la touche .
5. Après un bref instant de mise au point, la lecture apparaîtra automatiquement.

Pour visualiser la fréquence du courant alternatif mesuré en mA, appuyer sur la touche . La fréquence s'affichera dans la fourchette 16Hz-460Hz. Pour visualiser les mA en courant alternatif appuyer de nouveau sur la touche . Pour des entrées inférieures à 10mA, la fréquence n'est pas affichée.

Stocker les résultats en MΩ et Ω (RCL)

Après un test d'isolation ou de continuité, le résultat est affiché sur l'écran, il peut être sauvegardé avec des informations supplémentaires. Un numéro de circuit (de 1 à 99) peut être attribué et les circuits peuvent être groupés en utilisant la fonction de tableau de distribution. De cette façon, lors d'un téléchargement vers AVO PowerSuite, les résultats peuvent facilement être divisés en plusieurs programmes de tests différents. Lorsque les résultats sont affichés ou imprimés, un changement de tableau de distribution est indiqué.

Changement de tableaux de distribution (TD)

Avant un test, vous pouvez modifier le numéro de tableau de distribution de la façon suivante:

1. Tourner le sélecteur rotatif sur la position RCL. Le code rcl s'affiche.
2. Appuyer sur la touche . Le code TD actuellement sélectionné s'affiche, par exemple 01.
3. Ce numéro peut être modifié à l'aide des touches et pour afficher le numéro voulu.
4. Le numéro peut être confirmé en appuyant sur la touche , ou annulé en appuyant sur le bouton QUITTER (EXIT).
5. Lorsque le numéro est sauvegardé le code Std s'affiche (accompagné par un long signal sonore) confirmant que les données ont été sauvegardées.

Les tests peuvent maintenant continuer avec tous les résultants associés par la suite avec le nouveau numéro de tableau de distribution.

Stocker un résultat

A l'achèvement et à l'affichage de la mesure:

1. Appuyer sur et maintenir enfoncée la touche . Après environ 1 seconde, un signal sonore retentira. Aussi bien pour la continuité que pour l'isolation, un code, tel que donné dans le tableau ci-après s'affiche. Ce code est utilisé pour décrire le circuit testé et peut de ce fait être modifié par l'utilisateur.
2. Le code peut être modifié en appuyant sur les touches et .
3. Le code peut être confirmé en appuyant sur la touche , ou annulé en appuyant sur le bouton QUITTER.
4. Le numéro de circuit s'affiche sous la forme de 2 chiffres par exemple c01.

Remarque: *De nombreux tests différents peuvent être sauvegardés sous le même numéro de circuit.*

5. Le numéro de circuit peut être modifié en appuyant sur les touches et pour afficher le numéro qui convient.
6. Le numéro peut être confirmé et les résultats peuvent être sauvegardés en appuyant sur la touche , ou la procédure peut être annulée en appuyant sur le bouton QUITTER.
7. Lorsque le résultat est sauvegardé, le code Std s'affiche (accompagné d'un long signal sonore) confirmant que les données ont été sauvegardées. L'affichage PLEIN (FULL) indique qu'il n'y a plus de place pour stocker

les tests. Environ 300 résultats peuvent être sauvegardés dans la mémoire.

Tests à sauvegarder	Code d'affichage	Signification
Continuité	r1	Circuit CCT simple
	r2	Circuit CCT simple
	rr1	Circuit en anneau CCT
	rr2	Circuit en anneau CCT
	rrn	Circuit en anneau CCT
	r12	Circuit CCT de retour R1+R2
Isolation	n_e	N-PE (e=terre)
	L_n	L-N
	L_E	L-PE
	L_L	L-L

Effacer toutes les données

1. Déplacer le commutateur de sélection rotatif en position RCL. Le code rcl s'affiche.
2. Appuyer sur les touches et en même temps. Le code dEL s'affiche.
3. Confirmer que les données ne sont plus nécessaires en appuyant sur la touche ou annuler en appuyant sur toute autre touche. Le code rcl s'affiche.

Imprimer les résultats (voir modes de configuration)

1. Connecter l'imprimante et l'instrument avec un câble d'imprimante en série.
2. Déplacer le commutateur de sélection rotatif sur la position RCL. Le code rcl s'affiche.
3. Commencer l'impression en appuyant sur le bouton de TEST. Annuler n'importe quand en appuyant et en maintenant enfoncée la touche . Le code rcl s'affiche.

Retrouver des résultats sauvegardés

Il est possible de visualiser des résultats de tests précédemment enregistrés en déplaçant le commutateur rotatif sur la position RCL.

1. Déplacer le commutateur de sélection rotatif sur la position RCL. Le code rcl s'affiche.
2. Sélectionner le tableau de distribution nécessaire en appuyant sur les touches et . Les numéros des tableaux de distribution sont présentés dans l'ordre suivant lequel les résultats ont été sauvegardés. Un long signal sonore retentit lorsque l'on atteint la fin de la liste.
3. Appuyer sur la touche pour lister les numéros de circuits utilisés dans le tableau de distribution actuellement affiché ou appuyer sur le bouton QUITTER pour retourner à l'écran RCL.
4. Sélectionner le numéro de circuit en appuyant

sur les touches et . Les numéros de circuits sont présentés dans l'ordre suivant lequel les résultats ont été sauvegardés. Un long signal sonore retentit lorsque la la fin de la liste est atteinte.

5. Appuyer sur le bouton QUITTER pour retourner à l'écran de sélection des tableaux de distribution, ou appuyer sur la touche pour afficher les codes de tests enregistrés. Les codes suivants sont utilisés pour identifier les résultats des tests:

Code	Signification
Con	Test de continuité
InS	Test d'isolation

6. Sélectionner le test voulu en appuyant sur les touches et . Les tests sont présentés dans l'ordre ci-dessus. Un long signal sonore retentit lorsque vous atteignez la fin de la liste.
7. Appuyer sur le bouton QUITTER pour retourner sur l'écran de sélection du numéro de circuit, ou appuyer sur la touche pour faire défiler les résultats de tests stockés, ainsi que toute autre information de connexion.

Télécharger sur un PC

La série BMM a été conçue pour être utilisée avec AVO Powersuite pour Windows qui acceptera les résultats de tests et permettra la production de certificats divers, parmi lesquels l'Inspection périodique et le certificat d'Achèvement. Le CD fourni avec l'instrument contient le programme AVO. Dowload Manager. Ceci permet le téléchargement de résultats stockés et des données enregistrées vers un PC, la création de rapports de tests simples qui peuvent être exportés vers d'autres applications et utilisés pour créer des sauvegardes ou des rapports et certificats. Ce gestionnaire de téléchargement permet également de faire certaines modifications de votre instrument telles que le changement de la deuxième langue des impressions. Le CD contient un guide d'utilisation donnant des instructions complètes sur l'utilisation du gestionnaire de téléchargement.

Configuration du câble

Normalement, un fil à double prise femelle "D" à 9 voies adapté à la connexion de deux PC est nécessaire. Ce câble ne devrait pas dépasser 3m de long. Un câble est disponible comme accessoire ou peut être fabriqué comme suit:

Signal	Testeur d'isolation	'D' à 9 voies	'D' à 25 voies
Rx	2	3	2
Tx	3	2	3
DSR	6	4	20
GND	5	5	7

Consignation de données

La consignation des données signifie l'enregistrement automatique de mesures à intervalles réguliers sur une longue période, pour une visualisation ultérieure. Les résultats sont conservés dans une mémoire interne du testeur, mais ne peuvent être extraits que par un PC connecté à travers le port RS232.

Comparaison entre stockage et consignation des données.

Par stockage, nous entendons la sauvegarde en mémoire des résultats un par un au fur et à mesure que les tests sont effectués. Chaque résultat doit être individuellement sauvegardé après avoir été associé avec des données de connexion sélectionnables par l'utilisateur et un numéro de circuit, en même temps que le numéro de tableau de distribution choisi précédemment. Cependant, lorsque la consignation de données est en cours, les résultats sont sauvegardés automatiquement et de manière continue dans la mémoire et aucune autre information n'est enregistrée.

Le stockage et la consignation sont des fonctions réciproquement exclusives. L'instrument ne peut être réglé pour effectuer les deux opérations en un même instant donné. Si un résultat est stocké, alors toutes les données consignées sont effacées, et vice versa. De plus, seul un ensemble de données consignées peut être maintenu en mémoire. Une nouvelle session de consignation effacera les données précédentes. Ceci diffère du comportement de la fonction de stockage, dans laquelle les données des tests successifs s'accumulent dans la mémoire jusqu'à ce qu'elle soit pleine. Une autre différence entre le stockage et la consignation est que le premier s'applique seulement aux tests d'isolation et de continuité, tandis que tous les types de mesures peuvent être consignés (à part la gamme d'alarme).

Commencer une session de consignation

Une fois que la consignation a été activée et que l'intervalle a été défini, une session de

consignation de données peut commencer (voir modes de configuration):

1. Maintenir la touche enfoncée et déplacer le commutateur rotatif sur la position souhaitée.
2. Relâcher la touche . Le message log va apparaître. Pour confirmer qu'une consignation est demandée, appuyer sur la touche et un message de confirmation apparaîtra brièvement.
3. Appuyer sur QUITTER annulera la consignation et off s'affichera.

Si la consignation de données est activée, elle commencera dès que le test sera lancé, c'est-à-dire immédiatement sur les fonctions de volts, de millivolts, d'ohms, de kΩ et de capacitance, ou lorsque l'on aura appuyé sur le bouton de TEST pour les gammes d'isolation et de milliampères. Sur les fonctions de milliampères ou de millivolts, appuyer sur la touche si nécessaire, après que la consignation a commencé.

Arrêter une session de consignation

Pendant qu'une session de consignation se déroule, elle peut être arrêtée à tout moment en tournant le commutateur de gamme. Toutes les données consignées jusqu'à ce moment seront conservées. Autrement, on peut laisser l'enregistrement tourner et il s'arrêtera automatiquement un bref instant après que la mémoire sera devenue pleine.

Le nombre de résultats qui peuvent être consignés est d'environ 300, après quoi le message 'PLEIN' (FULL) clignotera sur l'écran pendant quelques minutes. Puis l'instrument s'éteindra.

Autres considérations

Remarquer que les batteries peuvent ne pas durer sur l'ensemble de la session de consignation, en fonction de leur état et de l'intervalle d'enregistrement qui a été défini. Si les batteries devaient tomber en panne, tout résultat déjà enregistré serait conservé. Remarquer que pendant la consignation de résultats d'isolation, le bouton de TEST a une action de blocage.

Visualiser les données consignées

Les résultats consignés ne peuvent être récupérés que via le port RS232 de l'instrument, à l'aide d'un

PC connecté par un câble en série. Le disque fourni avec l'instrument comprend un programme capable de traiter les données. La méthode est comparable à celle du téléchargement de résultats stockés. Pour plus d'informations, voir la section intitulée "Télécharger sur un PC". Remarquer que sur des mesures en millivolts de courant continu (cc) et de milliampères cc, le résultat de fréquence est toujours réglé sur zéro. Sur les mesures en millivolts de courant alternatif (ca) et de milliampères ca , le résultat de fréquence est réglé sur zéro si la fréquence n'a pas pu être mesurée.

Modes de configuration

Configuration de l'imprimante en série

L'imprimante devra être configurée à 9600 bauds, à 8 bits de données, sans bit de parité et avec 1 bit d'arrêt. L'instrument utilise une interface spéciale en série isolée qui est alimentée à partir du PC ou de l'imprimante. Dans l'éventualité improbable où votre PC ou votre imprimante ne seraient pas capables d'alimenter l'interface, il sera nécessaire de fournir une alimentation supplémentaire. Contacter AVO Product Support pour tous détails.

Mode de configuration de l'imprimante

L'instrument ne peut répondre à un signal "occupé" donné par l'imprimante et attend donc à la fin de chaque ligne. Ce laps de temps ("temps de retard de l'imprimante") et la langue de rapport de l'imprimante peuvent être modifiés.

1. Appuyer et maintenir enfoncée la touche , puis tourner le commutateur rotatif de sélection de la position ARRET (OFF) à la position RCL. Le code Pdt s'affiche.
2. Relâcher la touche .

Pour changer la vitesse de l'imprimante

1. Actionner la touche pour se déplacer, et afficher le code Pdt
2. Appuyer sur la touche . Le réglage actuel s'affiche.
4. Utiliser les touches et jusqu'à ce que la configuration souhaitée s'affiche.
3. Pour sauvegarder la nouvelle configuration, appuyer sur la touche . Le signal sonore retentit et std s'affiche. Pour annuler la nouvelle configuration, appuyer sur le bouton QUITTER.

Pour sélectionner la langue de l'imprimante

1. Appuyer sur la touche pour se déplacer et afficher le code lng.
2. Appuyer sur la touche 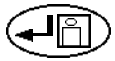 . La langue actuelle de rapport de l'imprimante s'affiche en 1 (Anglais) ou 2 (telle qu'indiquée sur l'étiquette de type sur la couverture du manuel d'utilisation).

Remarque: *La langue 2 peut être modifiée – voir ci-dessous.*

3. Appuyer sur la touche jusqu'à ce que la configuration de la langue voulue s'affiche
4. Pour sauvegarder la nouvelle configuration, appuyer sur la touche . Le signal sonore retentit et Std s'affiche. Pour annuler la nouvelle configuration, appuyer sur le bouton QUITTER.

Changement de seconde langue de l'imprimante

La langue 2 peut être échangée à l'aide du programme AVO Dowload Manager fourni avec votre instrument. Des instructions complètes sont données dans le guide d'utilisation accompagnant le CD.

Consignation de données

Activer/désactiver la consignation de données:

Dans le réglage d'usine, la consignation est activée et le stockage est désactivé.

1. Tourner le bouton de gamme sur 'RCL' tout en maintenant la touche enfoncée. Pdt s'affichera.
2. Appuyer sur la touche jusqu'à ce que log apparaisse
3. Appuyer sur la touche pour afficher le statut actuel de la fonction d'enregistrement, par exemple MARCHE ou ARRET.
4. Appuyer sur la touche fait basculer la configuration entre MARCHE et ARRET.
5. Appuyer sur la touche pour confirmer la configuration, ou sur le bouton EXIT pour quitter.

Définir l'intervalle de consignation des données.

1. Pendant que log est affiché, appuyer sur la touche . Int apparaîtra sur l'écran.
2. Appuyer sur la touche 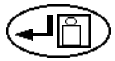 pour voir la valeur de l'intervalle de consignation (en secondes)
3. Régler l'intervalle en pas de 10 secondes avec les touches et (valeur maxi. 1990 secondes, valeur mini. 10 secondes)
4. Appuyer sur la touche pour confirmer la

nouvelle valeur, ou sur le bouton EXIT pour quitter.

5. Appuyer sur le bouton EXIT de nouveau pour sortir des écrans de configuration de consignation. L'écran affichera rcl.

Utiliser la sonde à commutateur MEGGER SP1

Fonctionnement:
La MEGGER SP1 est un accessoire pour les instruments de tests d'installations conçus par MEGGER. Lorsqu'elle est installée sur un connecteur spécialement conçu, à la place du fil "Bas" existant, la SP1 agit comme un bouton de test à distance pour faire fonctionner l'instrument comme une sonde basse. Ceci simplifie le contrôle de l'instrument et le sondage à deux mains. La SP1 convient à l'utilisation avec les instruments de tests d'isolation MEGGER jusqu'à 1KV de tension de test de sortie.

Sécurité:
Elle répond aux exigences de sécurité pour la double isolation conformément aux normes IEC1010-2-031 (1995), EN61010-2-031 (1995), IEC1010-1 (1995), EN61010-1 (1995) Catégorie III*, 300V de la phase à la terre et 500V de phase à phase. La sonde est équipée d'un fusible interne non remplaçable pour protéger l'utilisateur si a sonde devait être utilisée accidentellement en conjonction avec un fil de test dans la borne basse.

* Cela se rapporte à une surtension parasite susceptible d'être observée dans les câblages d'installation fixe.

Ne pas utiliser la sonde si une quelconque partie en est endommagée.

Remplacement de la batterie

Lorsqu'un symbole de batterie à plat ⊣⊢ apparaît, les piles sont presque épuisées et devront être remplacées dès que possible. Utiliser des piles alcalines IEC LR6 (AA) ou NiCd rechargeables. Pour installer ou remplacer les piles, déconnecter les fils de tests, mettre l'instrument sur ARRET et desserrer les vis captives à l'arrière du compartiment des batteries. Retirer le couvercle et déconnecter le porte-batteries des fils de batteries. S'assurer que les piles de remplacement sont installées avec la bonne polarité conformément à l'étiquette du porte-batteries. Rebrancher le porte-batteries aux fils de la

batterie. Replacer et rebloquer le couvercle du compartiment des batteries. Retirer les piles si l'instrument ne doit pas être utilisé pendant une longue période.

Vérification et remplacement du fusible

Pour vérifier le fusible de l'instrument, se mettre sur une gamme d'isolation et appuyer sur le bouton de TEST. Le symbole ⊣▭⊢ apparaîtra si le fusible est fondu. Pour remplacer le fusible, déconnecter les fils de tests, mettre l'instrument sur ARRET et desserrer les vis captives maintenant en place le couvercle du compartiment des batteries. Retirer le couvercle et remplacer le fusible. Replacer et rebloquer le couvercle du compartiment des batteries.

SPECIFICATIONS

(Toutes les précisions indiquées sont à +20°C.)

Gammes d'isolation

Test nominal	250V, 500V, 1000V (BMM2500)
Tension (c.c.):	50V, 100V, 250V, 500V, 1000V (BM2580)
Précision de tension de test:	+15% maximum sur un circuit ouvert
Intensité de court circuit:	<2mA
Intensité de test au chargement:	1mA à la valeur de passage mini. d'isolation définie dans les normes BS7671, HD384 et IEC 364, 2mA maxi.

Précision:

(BMM2500)

Gamme	Pleine échelle	Précision
1000V	20GΩ	±2% ±2 chiffres ±0,2% par GΩ
500V	10GΩ	±2% ±2 chiffres ±0,4% par GΩ
250V	5GΩ	±2% ±2 chiffres ±0,8% par GΩ

(BMM2580)

Gamme	Pleine échelle	Précision
1000V	200GΩ	±2% ±2 chiffres ±0,2% par GΩ
500V	100GΩ	±2% ±2 chiffres ±0,4% par GΩ
250V	50GΩ	±2% ±2 chiffres ±0,8% par GΩ
100V	20GΩ	±2% ±2 chiffres ±2,0% par GΩ
50V	10 GΩ	±2% ±2 chiffres ±4,0% par GΩ

Remarque: *Les spécifications ci-dessus s'appliquent seulement lorsque des fils au silicone de haute qualité sont utilisés.*

Gamme de mesure:

De 0,01MΩ à 200GΩ (de 0 à 100GΩ sur l'échelle analogique).

Gamme de fonctionnement à la norme EN61557:	de 0,10Ω à 1,00GΩ
Intensité de fuite:	10% ±3chiffres

Continuité

Gamme de mesure:	de 0,01Ω à 99,9Ω (de 0 à 10Ω sur l'échelle analogique)
Gamme de fonctionnement à la norme EN61557:	de 0,10Ω à 99,9Ω
Précision:	±2% ±2 chiffres
Tension de circuit ouvert:	5V ±1V
Intensité de test:	210mA ±10mA (de 0 à 2Ω)
Compensation du zéro aux sondes:	0,10Ω en général
Mise à zéro de la résistance des fils:	Jusqu'à 9,99Ω
Rejet de bruit:	1V rms 50/60Hz
Alarme:	Fonctionne à moins de 5Ω (environ).

Résistance

Gamme de mesures:	de 0,01Ω à 9,99Ω (de 0 à 100Ω sur l'échelle analogique)

Précision: ±3% ±2 chiffres
Tension de circuit ouvert: 5V ±1V
Intensité de court circuit: 25µA ±5µA

Tension

Gamme de mesure: de ±1V à ±500V
(de 0 à 1000V sur l'échelle analogique)
Précision: 0-500V c.c. ±2% ±3 chiffres
0-500V c.a. (50/60Hz) 2% ±3 chiffres
0-500V 400Hz c.a. ±5% ±3 chiffres
Résistance d'entrée: environ 200kΩ.
Seuil du détecteur: 1V

Millivolts

Gamme de mesures:

de ±0,1mV à ±1999mV (de 0 à 1000mV sur l'échelle analogique)
Précision: 0,1mV à 10mV c.c. ou c.a. (50/60 Hz) ±2% ±5 chiffres
10mV à 1999mV c.c. ou c.a. (50/60 Hz) ±2% ±3 chiffres
0,1mV à 10mV c.a. (16-460 Hz) ±5% ±7 chiffres
10mV à 1999mV c.a. (16-460 Hz) ±5% ±5 chiffres
Mise à zéro des millivolts en c.c.: Jusqu'à 9,9mV
Résistance d'entrée: >3MΩ

Capacitance

Gamme de mesures: 0,1nF à 9,99uF
Précision: ±3% ±2 chiffres ±0,2nF
Mise à zéro des uF: Jusqu'à 10nF

Milliampères

Gamme de mesures:

de 0,1mA à 500mA (0 à 1000mA sur l'échelle analogique)
Précision: 0,1mA à 10mA c.c. ou c.a. (50/60Hz) ±2% ±5 chiffres
10mA à 500mA c.c. ou c.a. (50/60Hz) ±2% ±3 chiffres
0,1mA à 10mA c.a. (16-460Hz) ±5% ±7 chiffres
10mA to 500mA a.c. (16-460Hz) ±5% ±5 chiffres

Fréquence

Gamme de mesures: 16Hz à 460Hz
Précision: ±1% ±1 chiffre

Erreurs de base et de service pour les gammes d'isolation et de résistance.

L'erreur de base est l'imprécision maximale de l'instrument dans des conditions idéales, tandis que l'erreur de service est l'imprécision maximale en prenant en compte l'effet de la tension de la batterie, la température, les interférences, là où elles s'appliquent. Après avoir défini l'erreur de service, nous pouvons calculer la gamme de mesures. C'est la gamme des mesures sur lesquelles l'erreur de service est inférieure à 30% de la lecture. Les instruments numériques sont affectés par le nombre d'erreurs de chiffres – par exemple une valeur de 0,10Ω mesurée avec la gamme de continuité peut donner un affichage dans la fourchette de 0,07Ω à 0,13Ω ce qui est une erreur maximale de 30%. De ce fait la gamme de mesures mesurant une basse résistance va de 0,10Ω à 99,9Ω. Lorsque l'on vérifie qu'une mesure ne dépasse une limite, l'erreur de service doit être prise en compte et ces tableaux permettent de le faire rapidement et facilement. Ces derniers garantissent que la valeur mesurée est plus ou moins élevée que la valeur limite définie comme convenable.

Résistance d'isolation – MΩ

Limite	Lecture mini. indiquée	Limite	Lecture mini. indiquée
0,10	0,14	2,00	2,12
0,20	0,25	3,00	3,16
0,30	0,35	4,00	4,20
0,40	0,46	5,00	5,24
0,50	0,56	10,00	10,8
0,60	0,66	20,00	21,2
0,70	0,77	30,00	31,6
0,80	0,87	40,00	42,0
0,90	0,98	50,00	52,4
1,00	1,08	100,00	94,0

Résistance de continuité – Ω

Limite	Lecture maxi. indiquée	Limite	Lecture maxi. indiquée
0,10	0,06	2,00	1,88
0,20	0,15	3,00	2,84
0,30	0,25	4,00	3,80
0,40	0,34	5,00	4,76
0,50	0,44	10,00	9,56
0,60	0,54	20,00	18,8
0,70	0,63	30,00	28,4
0,80	0,73	40,00	38,0
0,90	0,82	50,00	47,6
1,00	0,92	100,00	92,0

Securite

L'instrument répond aux exigences de sécurité pour la double isolation conformément aux normes IEC1010-2-031 (1995), EN61010-2-031 (1995), Catégorie III*, de 300V de la phase à la terre et de 440V de phase à phase, sans besoin de fils de tests à fusible distincts. Si nécessaire, des fils de tests à fusibles sont disponibles en tant qu'accessoires optionnels.

* Cela concerne une surtension de passage susceptible d'être observée dans le câblage d'une l'installation fixe.

L'appareil est conforme aux parties suivantes de la norme EN61557, Sécurité électrique dans les réseaux de distribution basse tension jusqu'à 1000V alternatif et 1500V continu. – Dispositifs de contrôle, de mesures et de surveillance des mesures de protection:

Partie 1 - Exigences générales
Partie 2 - Résistance d'isolation
Partie 4 - Résistance de la connexion à la terre et liaison équipotentielle

Fusible

500mA (F) 500V, 32x 6mm Céramique HBC 10kA minimum.

C.E.M.

L'instrument est conforme aux normes EN 50081-1 et EN 50082-1 (1992).

Alimentation Electrique

Type de batterie: Piles alcalines 6x1,5V de type IEC LR6 ou piles rechargeables 1,2V NiCd.

Durée de vie des batteries (en général):

2100 tests d'isolation de 5 secondes à 1KV.
3200 tests d'isolation de 5 secondes à 500V
4000 tests d'isolation de 5 secondes à 250V
2700 tests de continuité de 5 secondes
4700 tests de kΩ de 5 secondes

Conditions Environnementales

Fourchette de fonctionnement
de -5 à +40°C
Humidité de fonctionnement
90% d'humidité relative à 40°C maxi.
Fourchette de températures de Stockage
de -25 à +65°C
Température de réglage +20°C
Altitude maximale 2000m
Protection contre la poussière et l'eau
IP54
Coefficient de température
<0,1% par °C
Poids 742g
Dimensions 110mm x 220mm x 45mm
Nettoyage Frotter avec un chiffon propre humecté avec de l'eau savonneuse ou de l'alcool Isopropyle (IPA)

Accessoires

Fourni:	*Numéro de pièce*
Jeu de fils de tests	6220-437
Mallette de tests portable	6420-112

En option:	*Numéro de pièce*
Jeu de fils à fusibles, FPK8	6111-218
Sonde de tests à commutateur SP1	6220-606
Cartes d'enregistrement de tests (paquet de 20)	6111-216
AVO PowerSuite	6111-237
AVO NiceOne	6111-403
Câble en série à 9 chemins	25955-025

Publications

'A Stitch in Time'	AVTM21-P8B
'Testing Electrical Installations'	6172-129

REPARATIONS ET GARANTIE

Le circuit de l'instrument contient des composants sensibles à l'électricité statique, et il faut manipuler les plaques de circuits imprimés avec précaution. Si la protection d'un instrument s'est détériorée, il ne devra pas être utilisé, et être envoyé pour des réparations auprès d'un personnel qualifié et formé comme il convient. La protection sera probablement atténuée si, par exemple, l'instrument est clairement endommagé, s'il ne peut effectuer les mesures voulues, ou s'il a été soumis à un stockage dans un environnement défavorable, ou s'il a été exposé à des efforts importants pendant le transport.

Les nouveaux instruments sont garantis pour 3 ans à partir de la date d'achat par l'utilisateur.

Remarque: *Toute réparation ou réglage préalablement non autorisé annulera automatiquement la garantie.*

Réparation des instruments et pièces détachées

Concernant vos besoins de maintenance d'instruments MEGGER®, contacter:

	ou	
AVO INTERNATIONAL		MEGGER SARL
Archcliffe Road		29 Allée de Villemomble
Dover		93340 Le Raincy
Kent, CT17 9EN.		Paris
Angleterre.		France
Tél.: +44 (0) 1304 502243		Tél.: +33 (1) 43.02.37.54
Fax: +44 (0) 1304 207342		Fax: +33 (1) 43.02.16.24

ou une entreprise de réparations agréée.

Entreprises de réparations agréées

Un certain nombre d'entreprises de réparation d'instruments indépendantes ont été approuvées pour des travaux de réparations sur la plupart des instruments MEGGER®, à l'aide de pièces détachées MEGGER® véritables. Se reporter à la liste des Distributeurs/Agents désignés concernant les pièces détachées, les équipements de réparations et des recommandations sur la meilleure marche à suivre.

Renvoyer un instrument pour réparation

Si vous renvoyez un instrument au fabricant pour des réparations, il doit être envoyé en port payé à l'adresse qui convient. Une copie de la facture et de la note d'emballage doivent être envoyées en même temps par poste par avion afin d'expédier le dédouanement aux Douanes. Un devis des réparations montrant le retour de fret et les autres frais sera présenté à l'envoyeur, s'il le souhaite, avant que le travail sur l'instrument commence.

ISOLATIONSMULTIMETER
MEGGER BMM2500

Bedienungsanleitung

MEGGER®

INHALTSVERSEICHNIS

Sicherheitshinweise 59

Allgemeine Beschreibung **60**
- Bedienung 62
- Durchgangsprüfung 65
- Durchgangspiepser 66
- Spannungsprüfungen 67
- Millivoltprüfungen 68
- Speichern von Ergebnissen 69

Datenaufzeichnung 72

Einrichtbetrieb 74

Technische Daten 77

Reparatur und Garantie 82

Auf dem Gerät werden die folgenden Symbole verwendet:

Vorsicht, Gefahr eines elektrischen Schlags.

Vorsicht, Lesen Sie bitte in der Benutzeranleitung.

Das Gerät ist durchwegs durch doppelte Isolations geschützt (Klasse II).

Das Gerät entspricht den aktuellen EU-Richtlinien.

Das Gerät darf nicht an Installationen mit >500V angeschlossen werden.

SICHERHEITSHINWEISE

- ★ Die Sicherheitshinweise und Vorsichtsmaßnahmen müssen gelesen und verstanden werden, bevor das Gerät benutzt wird. Sie müssen während des Gebrauchs befolgt werden.
- ★ Der zu prüfende Stromkreis muß, außer für die Spannungsmessung, stromlos geschaltet und abgetrennt werden, bevor die Anschlüsse hergestellt werden.
- ★ Während der Prüfung dürfen keine Schaltverbindungen berührt werden.
- ★ Nach Isolationsprüfungen muß gewartet werden, bis sich kapazitive Stromkreise entladen haben, bevor die Prüfkabel abgetrennt werden.
- ★ Die ‘Warnung bei stromführenden Stromkreisen’ und die ‘Automatische Entladung’ sind zusätzliche Sicherheitsfunktionen und sind nicht als Ersatz für eine normale sichere Arbeitspraxis zu betrachten.
- ★ Austauschsicherungen müssen von der richtigen Art sein und den richtigen Nennstrom haben. Das Einsetzen von Sicherungen mit dem falschen Nennstrom führt im Fall einer Überlast zur Beschädigung des Geräts.
- ★ Prüfkabel, einschließlich Krokodilklemmen, müssen in gutem Zustand und sauber sein, und die Isolation darf keine Risse oder Sprünge haben.
- ★ Die britischen Sicherheitsbehörden empfehlen bei der Messung von Spannungen an Hochenergieanlagen die Verwendung von abgesicherten Prüfkabeln.

HINWEIS:

DIE GERÄTE DÜRFEN NUR VON ENTSPRECHEND AUSGEBILDETEN UND FACHKUNDIGEN PERSONEN VERWENDET WERDEN. DIE BENUTZER DIESER GERÄTE BZW. DEREN ARBEITGEBER WERDEN DARAN ERINNERT, DAß DIE GESETZGEBUNG ÜBER GESUNDHEIT UND SICHERHEIT DIE DURCHFÜHRUNG VON GÜLTIGEN RISIKOBEWERTUNGEN ALLER ELEKTRISCHER ARBEITEN VERLANGT, UM POTENTIELLE QUELLEN ELEKTRISCHER GEFAHREN UND DAS RISIKO ELEKTRISCHER VERLETZUNGEN, Z.B. INFOLGE UNBEABSICHTIGTER KURZSCHLÜSSE, ZU IDENTIFIZIEREN. WENN DIE BEWERTUNG ERGIBT, DAß DAS RISIKO ERHEBLICH IST, SIND ABGESICHERTE, UNTER EINHALTUNG DER HSE-RICHTLINIE GS38 ‘ELECTRICAL TEST EQUIPMENT FOR USE BY ELECTRICIANS’ (ELEKTRISCHE PRÜFGERÄTE FÜR DIE VERWENDUNG DURCH ELEKTRIKER’) HERGESTELLTE PRÜFKABEL ZU VERWENDEN.

ALLGEMEINE BESCHREIBUNG

Die Geräte der Reihe **MEGGER BMM2500** sind batteriebetriebene Isolations- und Durchgangsprüfgeräte mit einer Meßfähigkeit von 0,01Ω Durchgang bis 200GΩ Isolation.

Die Geräte bieten Mehrfachspannungseinrichtungen, bedienen sich voll der Mikroprozessortechnologie und haben eine grofle Flüssigkristallanzeige, auf der digitale und analoge Anzeigen kombiniert sind. Die Analoganzeige hat den Vorteil, daß sie auf Trends und Schwankungen der Ablesewerte hinweist, während die digitale Anzeige direkte und genaue Ergebnisse liefert. Die Anzeige ist außerdem hintergrundbeleuchtet und ist selbst bei schlechten Lichtverhältnissen deutlich sichtbar.

Die Geräte der Reihe BMM2500 haben die einmalige Fähigkeit, Spannungen bis zu einer Auflösung von 0,1mV zu messen. Dadurch erhält der Benutzer die Option, eine große Auswahl von Meßwandlern anzuschließen, mit denen die Fähigkeiten des Geräts der Reihe BMM beispielsweise für die Temperatur- oder Feuchtigkeitsmessung noch erweitert werden.

Ein speziell angefertigter Stecker oben am Gerät ermöglicht die Verwendung der als Sonderzubehör erhältlichen geschalteten Sonde **MEGGER SP1** für die zweihändigen Bedienung der Sonde.

Die Bereiche 250V, 500V und 1000V können zum Prüfen von elektrischen Installationen unter Einhaltung von BS7671 (16. Ausgabe der IEEE-Verdrahtungsvorschriften), IEC364 und HD384 verwendet werden, da jeder Bereich bei den in diesen Dokumenten vorgeschriebenen Mindestdurchgangswerten der Isolation einen Mindestprüfstrom von 1 mA hat. Der Bereich 100V (BMM2580) ist ideal für die Prüfung von Telekommunikationsgeräten, die durch höhere Spannungen beschädigt würden. Der Bereich 50V (BMM2500) ist nützlich für die Prüfung empfindlicher Geräte, wie z.B. Elektronikbauteile und Computerperipheriegeräte.

Die Geräte der Reihe BMM2500 haben eine Stromeinrichtung, die die Messung von bis zu 500mA ermöglicht. Zusammen mit Ω, V und mV-Bereichen bedeutet dies, das das Gerät realistisch in Situationen eingesetzt werden kann, in denen

früher ein Multimeter benötigt worden wäre. Für höhere Ströme ist eine Stromklemme als Zusatzausstattung erhältlich.

Die Geräte der Reihe BMM2500 haben eine eingebaute RS232-Schnittstelle und unterstützen die Speicherung und das Herunterladen von Daten auf einen PC. Die Geräte werden mit der erforderlichen Software für das Herunterladen und die tabellarische Darstellung der Ergebnisse geliefert. Das Format der heruntergeladenen Daten ist außerdem mit AVO PowerSuite kompatibel, so daß die Geräte als Teil eines integrierten Prüf- und Zertifikationssystems eingesetzt werden können. Die Geräte der Reihe BMM2500 sind außerdem in der Lage, Ergebnisse über einen längeren Zeitraum aufzuzeichnen, so daß Langzeitmessungen von Anlagen durchgeführt werden können.

Die Reihe BMM2500 ist nach IEC1010-1 ausgelegt und gegen die Verbindung mit einer 500V-Versorgung der Kategorie III abgesichert. Die Geräte haben eine Grundgenauigkeit von ±2% bei 20°C. Die Geräte sind nach IP54 wasserdicht und staubdicht. Dies trägt zum Beibehalten der Genauigkeit bei und garantiert maximale Zuverlässigkeit in rauhen Umgebungen.

BEDIENUNG

Lesen Sie die Sicherheitshinweise, bevor Sie das Gerät benutzen.

Die Prüfung wird automatisch verhindert, wenn:

- Eine externe Spannung von >25V anliegt, wenn das Gerät in eine beliebige Isolationsbereichstellung gestellt ist.
- Eine externe Spannung von >10V bei allen anderen Bereichen anliegt (außer OFF/V/mV/RCL).

Die externe Spannung wird auf der Anzeige angezeigt, bei Isolationsbereichen ertönt ein Piepser, wenn versucht wird, eine Prüfung auszuführen.

Warnung bei stromführenden Stromkreisen

Wenn in den Isolationsbereichen mehr als 25V an die Anschlüsse angelegt wird, wird das Gerät als Vorgabe zu einem Voltmeter und gibt eine hörbare Warnung, falls versucht wird, eine Prüfung auszuführen. Bei allen anderen Schalterstellungen außer OFF/V/mV/RCL wird das Vorgabevoltmeter aktiviert, wenn mehr als 10V angelegt werden. Die Prüfung wird verhindert.

Spannungsprüfung bei Hochenergieanlagen

Seien Sie äußerst vorsichtig, wenn Sie Spannungen über 30V messen, insbesondere in Hochenergieanlagen. Abgesicherte Prüfkabel sind für örtliche Situationen, in denen erhöhter Schutz benötigt wird, als Sonderzubehör erhältlich.

Automatisches Ausschalten

Zum Schonen der Batterie schaltet das Gerät (nachdem zuvor eine Reihe von Piepstönen ertönt) nach ca. 10 Minuten der Untätigkeit bei Isolationsprüfungen ab, nach ca. 5 Minuten bei allen anderen Bereichen. Wenn beim Einschalten des Geräts die Taste gedrückt wird, wird die Zeit bis zum Ausschalten auf 60 Minuten verlängert. Stellen Sie den Schalter in die Stellung OFF (AUS) und dann in die gewünschte Stellung, um nach einer automatischen Ausschaltung den Betrieb wiederherzustellen.

Hinweis: *Es wird empfohlen, das Gerät auszuschalten (Schalterstellung OFF), wenn es nicht in Gebrauch ist.*

Hintergrundbeleuchtung

Die Hintergrundbeleuchtung wird durch Drücken der Taste aktiviert. Die Hintergrundbeleuchtung bleibt während ca. 1 Minute an, und schaltet dann automatisch aus, um die Batterie zu schonen. Alternativ kann die Taste auch nochmals gedrückt werden.

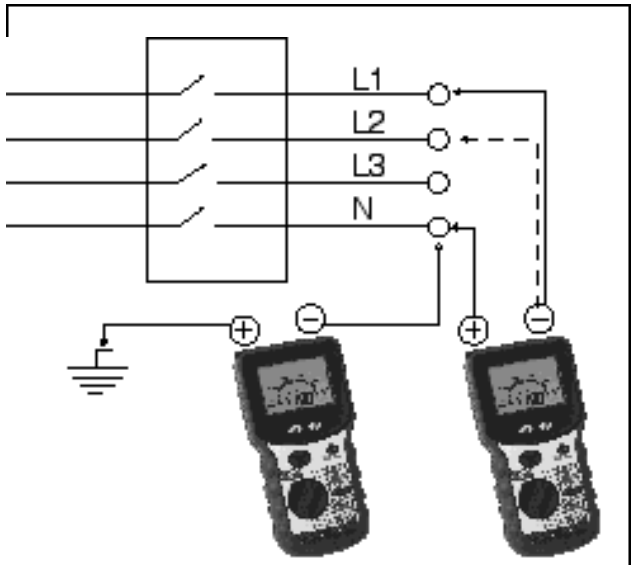

ABB.1

Isolationsprüfungen (MΩ) (Siehe Abb.1)

Bei den Isolationsprüfungen wird eine bekannte Spannung an den zu prüfenden Stromkreis angelegt und der daraus resultierende Kriechstrom gemessen. Der zu prüfende Stromkreis muß vollständig stromlos geschaltet und abgetrennt werden, bevor die Prüfanschlüsse hergestellt werden.

Isolationsprüfungen werden nur ausgelöst, wenn die Taste TEST gedrückt wird.

1. Stellen Sie den Bereichsschalter auf die gewünschte Prüfspannung.
2. Verbinden Sie die Prüfkabel zuerst mit dem Gerät, dann mit dem isolierten Gegenstand, der geprüft werden soll.
3. Drücken Sie die Taste TEST, um die Prüfspannung anzulegen. Lesen sie das Ergebnis ab.
4. Lassen Sie die Taste TEST am Ende der Prüfung los. Der letzte Ablesewert bleibt auf der Anzeige.
5. Alle kapazitiven Stromkreise, die während einer Prüfung aufgeladen wurden, werden automatisch entladen. Wenn eine bedeutende Spannung verbleibt, erscheint die Spannungswarnung, und die vorhandene Spannung wird angezeigt.
6. Entfernen Sie die Prüfkabel erst, wenn keine Spannung mehr angezeigt wird.

Einrastende Prüftaste (ltb)

Wenn eine lange Isolationsprüfung ausgeführt werden soll, kann die Prüfung 'verriegelt' werden, indem die Taste gedrückt wird, während die Taste TEST gedrückt gehalten wird. Auf der Anzeige erscheint die Warnung ⚠, beide Tasten können losgelassen werden, und die Prüfung fährt fort. Die Prüfung wird beendet, indem die Taste TEST gedrückt wird.

Hinweis: *Bei der ersten Betätigung des Bereichs '1000V" gibt es, jedesmal, wenn dieser Bereich ausgewählt wird, eine kurze Verzögerung. Dies soll das unbeabsichtigte Anlegen von 1kV verhindern.*

Der Bereich MΩ verfügt über eine Anzeige des Kriechstroms. Der Kriechstrom ist der Wert des Stroms, der während der

Isolationsprüfung fließt. Drücken Sie die Taste, um den Kriechstrom anzuzeigen. Drücken Sie die Taste nochmals, um den Isolationswiderstand anzuzeigen.

Gutes Vorgehen bei der Isolationsprüfung

Beim Ausführen von Messungen über einigen GΩ muß vorsichtig vorgegangen werden. Die Kabel müssen sauber, trocken und in gutem Zustand sein. Sie dürfen außerdem nicht miteinander verschlungen sein. Es wird außerdem empfohlen, daß die geschaltete Sonde SP1 nicht verwendet wird, da bei Messungen von hohen Werten die Genauigkeit nicht garantiert ist. Das Gerät – insbesondere die Klemmen – muß sauber und trocken sein. Versuchen Sie außerdem alle Kriechströme zu vermindern, die zu fehlerhaften Ergebnissen für den geprüften Gegenstand führen können.

Prüfung des Polarisationsindex

Als Polarisationsindex (PI) wird das dielektrische Absorptionsverhältnis bezeichnet, wenn Widerstandswerte nach 1 Minute und wieder nach 10 Minuten gemessen werden. Der Polarisationsindex ist dann der Widerstandswert nach 10 Minuten geteilt durch den Widerstandswert nach 1 Minute. Die Prüfung kann bei beliebiger Spannung ausgeführt werden. Sie finden ausführlichere Angaben zur PI-Prüfung und der Bewertung der Ergebnisse in den auf der Zubehörseite aufgeführten Veröffentlichungen von AVO International.

Automatische Entladung

Wenn die Taste TEST nach einer Isolationsprüfung losgelassen wird (bzw. nochmals gedrückt wird, wenn die Taste eingerastet war), wird automatisch eine 200kΩ-Last über die Anschlüsse geschaltet, um den geprüften Gegenstand zu entladen. Gegebenenfalls vorhandene Spannung wird auf der Anzeige angezeigt, so daß die Entladung überwacht werden kann.

Typische Eigenschaften der Anschlußspannung

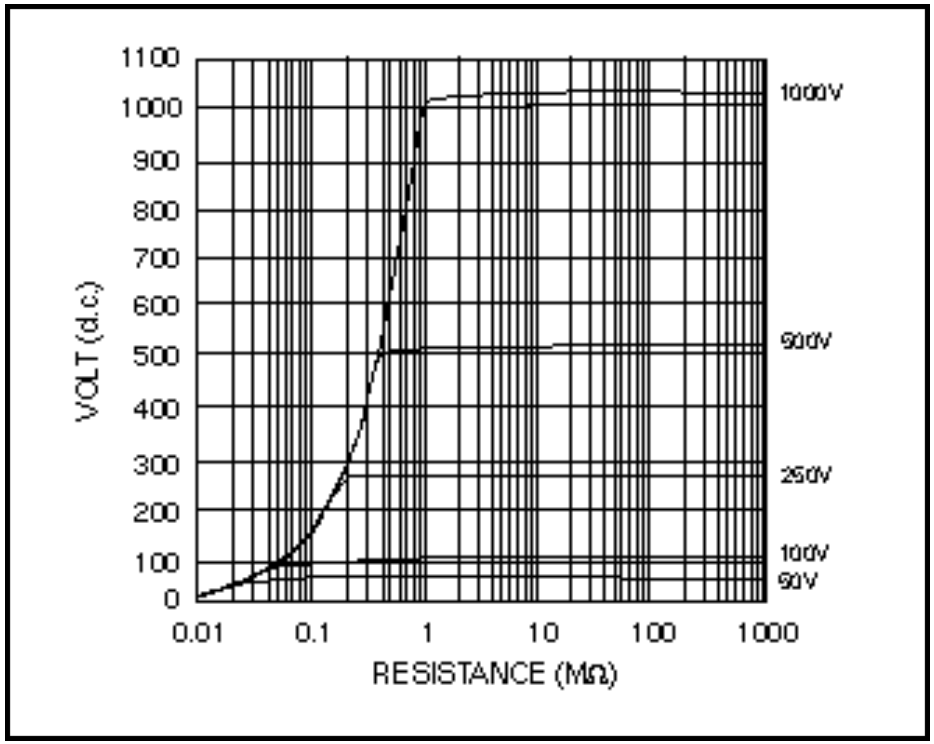

Durchgangsprüfung (Ω) (Siehe Abb. 2)

Die Durchgangsprüfungen werden aktiviert, wenn die Sonden einen Kontakt von weniger als einigen kΩ machen. Die Prüfung läuft ab, ohne daß die Taste TEST gedrückt werden muß. Wenn die Prüfkabel entfernt werden, bleibt die Anzeige während einiger Sekunden erhalten und wird dann zurückgesetzt. Drücken Sie die Taste , um das letzte Ergebnis abzurufen. Dieser Bereich eignet sich nicht für die Prüfung von Dioden, da der automatische Kontaktdetektor nicht aktiviert wird, wenn das Gerät an eine Diode angeschlossen ist.

1. Stellen Sie den Wahlschalter in die Stellung Ω.
2. Schließen Sie die Prüfkabel an.
3. Die Prüfung wird automatisch aktiviert.
4. Nachdem die Prüfsonden abgetrennt sind, bleibt die Anzeige während einiger Sekunden erhalten.

Nullen des Prüfkabelwiderstands

Der Widerstand der Prüfkabel kann im Durchgangsbereich (bis 9,99Ω) genullt werden. Die Nullinformation wird in einem nichtflüchtigen Speicher gespeichert und bleibt so erhalten, wenn das Gerät ausgeschaltet wird.

1. Wählen Sie den Durchgangsbereich.
2. Schließen Sie die Prüfkabel mittels Prüfspitzen über eine bekannten guten Leiter kurz.

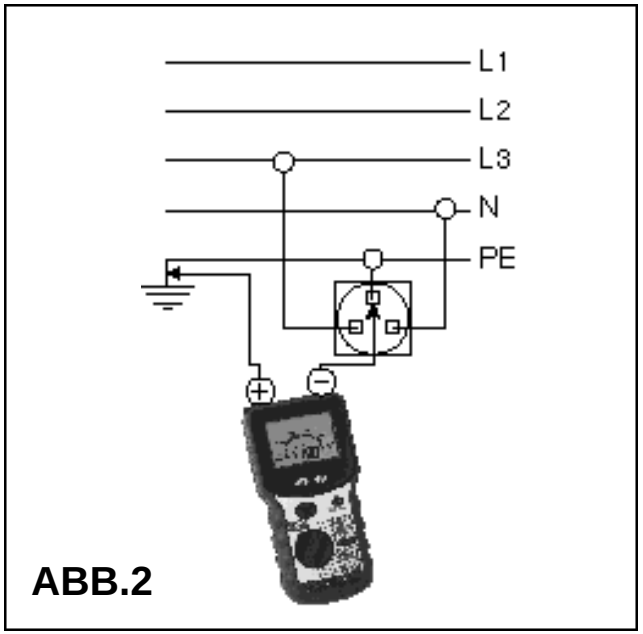

ABB.2

3. Drücken Sie die Taste TEST, wenn sich die Anzeige stabilisiert hat. Das Symbol für die Nullpunktverschiebung erscheint.
4. Drücken Sie die Taste TEST nochmals, um die Nullpunktverschiebung zu lösen.

Der Durchgangsbereich hat eine Verriegelungsfunktion (LOCK). Drücken Sie die Taste , um den Durchgangsbereich zu VERRIEGELN, und das VERRIEGELUNGSSYMBOL erscheint. Drücken Sie die Taste , um durch die verfügbaren Bereich zu blättern. Halten Sie die Taste

gedrückt, um die VERRIEGELUNGSFUNKTION zu deaktivieren.

Mögliche Fehlerquellen

Messungen und Ergebnisse können folgendermaßen beeinträchtigt werden:

- Durch die Impedanz von parallelgeschalteten laufenden Stromkreisen
- Durch die Impedanz, beispielsweise von Induktionsspulen, die sich während der Messung verändert
- Durch eine schlechte Verbindung mit dem zu prüfenden Stromkreis

Durchgangspiepser

Der Durchgangspiepser ertönt anhaltend, wenn weniger als 5Ω registriert werden. Bei Widerständen von weniger als einigen kΩ und über 5Ω ertönen kurze Piepstöne.

1. Stellen Sie den Wahlschalter in die Stellung .
2. Schließen Sie die Prüfkabel an.

Anzeige:	*Hörbares Signal:*
<5Ω	anhaltendes Piepsen
<3kΩ	kurzer Piepston
>3kΩ	kein Piepston

Widerstandsprüfungen (kΩ)

Dies ist eine Prüfung bei niedriger Spannung (5V) und niedrigem Strom (25µA) für empfindliche elektronische Geräte. Sie funktioniert genauso, wie die Durchgangsbereiche.

1. Stellen Sie den Wahlschalter in die Stellung kΩ.
2. Schließen Sie die Prüfkabel an.
3. Die Prüfung wird automatisch aktiviert.

Der kΩ-Bereich hat eine Verriegelungsfunktion (LOCK). Drücken Sie die Taste , um den kΩ-Bereich zu VERRIEGELN, und das VERRIEGELUNGSSYMBOL erscheint. Drücken Sie die Taste , um durch die verfügbaren Bereich zu blättern. Halten Sie die Taste gedrückt, um die VERRIEGELUNGSFUNKTION zu deaktivieren.

Der Widerstandsbereich wird durch eine Methode mit hoher Impedanz geschützt. Wenn daher das Gerät an einen stromführenden Stromkreis angeschlossen wird, löst die Sicherung nicht aus, wie bei den Isolations-, Durchgangs- und Summerbereichen. Das Gerät zeigt lediglich die angelegte Überspannung an.

Diodenprüfung

Dieser Bereich kann auch für die Prüfung von Dioden verwendet werden, wobei, die positive Klemme die Quelle des Prüfstroms ist. Das Diodensymbol erscheint, wenn die über die Klemmen

entstehenden Spannung innerhalb der Grenzen für Halbleiterübergänge liegt. Diese Funktion, zusammen mit dem geringen Prüfstrom und dem großen Meßbereich (0,01kΩ to 10000kΩ) machen den Widerstandsbereich sehr nützlich für die Allzweckprüfung.

Spannungsprüfungen (V)

Wenn an den Klemmen >1V Wechselstrom bzw. Gleichstrom anliegt, wird die gemessene Spannung auf der Anzeige angezeigt. Die Spannungsanzeige funktioniert ordnungsgemäß, selbst wenn die Sicherung ausgelöst hat. Wenn die Funktion des Voltmeters in Frage steht, können Sie es an einer bekannten Quelle überprüfen.

1. Stellen Sie den Wahlschalter in die Stellung V.
2. Schließen Sie die Prüfkabel an.
3. Nach einer kurzen Beruhigungszeit wird das Ergebnis automatisch angezeigt.

Drücken Sie die Taste , um die Frequenz der gemessenen Wechselspannung anzuzeigen. Die Frequenz wird im Bereich 16Hz-460Hz angezeigt. Drücken Sie nochmals die Taste , um die Wechselspannung anzuzeigen.

Millivoltprüfungen (mV)

Die gemessene Wechselspannung bzw. Gleichspannung wird auf der Anzeige angezeigt.

1. Stellen Sie den Wahlschalter in die Stellung mV.
2. Wählen Sie mit der Taste 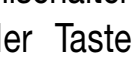 entweder a.c. mV (Wechselstrom) oder d.c. mV (Gleichstrom).
3. Schließen Sie die Prüfkabel an.
4. Nach einer kurzen Beruhigungszeit, wird das Ergebnis automatisch angezeigt.

Hinweis: *Die Warnung bei stromführendem Stromkreis funktioniert im mV-Bereich nicht.*

Nullen von d.c. mV (keine Funktion zum Nullen von a.c. mV)

Um den d.c. mV-Bereich zu nullen, schließen Sie die Kabel in der Stellung d.c. mV kurz, warten, bis sich die Anzeige stabilisiert hat, und drücken dann die Taste TEST. Bis zu 9,9mV können im Bereich d.c. mV genullt werden. Das Symbol erscheint, um anzuzeigen, daß der Nullpunkt eingestellt wurde.

1. Wählen Sie den Bereich d.c. mV.
2. Schließen Sie die Prüfkabel miteinander kurz.
3. Drücken Sie die Taste TEST, nachdem sich die Anzeige stabilisiert hat. Das Symbol für die Nullpunktverschiebung erscheint.
4. Drücken Sie die Taste TEST nochmals, um die Nullpunktverschiebung zu lösen.

Drücken Sie die Taste , um die Frequenz der Wechselspannung im Bereich a.c. mV anzuzeigen. Die

Frequenz wird im Bereich 16Hz-460Hz. angezeigt. Drücken Sie die Taste nochmals, um die Wechselspannung a.c. mV anzuzeigen. Bei Eingängen von weniger als 10mV wird die Frequenz nicht angezeigt.

Kapazitätsprüfungen (mF) (nur BMM2580)

Die gemessene Kapazität wird auf der Anzeige angezeigt.

1. Stellen Sie den Wahlschalter in die Stellung mF.
2. Verbinden Sie die Prüfkabel mit dem zu prüfenden Stromkreis.
3. Nach einer kurzen Beruhigungszeit wird das Ergebnis automatisch angezeigt.

Nullen von mF

Um den Bereich mF zu nullen, trennen Sie die Kabel ab, warten, bis sich die Anzeige beruhigt hat und drücken dann die Taste TEST. Bis zu 10,0nF können im Bereich mF genullt werden. Das Symbol erscheint, um anzuzeigen, daß der Nullpunkt eingestellt wurde.

1. Wählen Sie den Bereich mF.
2. Trennen Sie die Prüfkabel vom zu prüfenden Stromkreis.
3. Drücken Sie die Taste TEST, wenn sich die Anzeige stabilisiert hat. Das Symbol für die Nullpunktverschiebung erscheint.
4. Drücken Sie die Taste TEST nochmals, um die Nullpunktverschiebung zu lösen.

Der Bereich eignet sich für die Prüfung von diskreten Bauteilen und kurzen Signalleitungen mit geringen Interferenzen. Wenn Elektrolytkondensatoren geprüft werden, ist das rote Kabel an den Pluspol des Kondensators anzuschließen. Dieser Bereich eignet sich nicht zum Kontrollieren der Kapazität von Signalleitungen, die hohen Wechselstrominterferenzen ausgesetzt sind.

Wenn die Prüfung begonnen wurde, erscheint auf der Anzeige – – –. Falls übermäßiges Rauschen vorhanden ist, bleibt dieses Symbol vorhanden oder blinkt, um anzuzeigen, daß zu viel Rauschen vorhanden ist, um ein Ergebnis zu erhalten.

Milliampèreprüfung (mA)

Wegen der geringen Quellenimpedanz bei Strommessungen hat diese Prüfung eine zusätzliche Funktion, die sicherstellt, daß das Vorgabevoltmeter sichtbar ist, wenn der Bereich erstmals ausgewählt wird. Die Prüfung wird verhindert, wenn mehr als 25V an den Klemmen anliegen. Drücken Sie die Taste TEST, und halten Sie sie während ca. 2 Sekunden gedrückt, um die Prüfung zu starten, und um den mA-Bereich zu aktivieren. Wenn er einmal aktiviert ist, muß die Taste TEST nicht mehr gedrückt werden, und der gemessene Wert wird automatisch angezeigt. Drücken Sie die Taste , um die Anzeige zwischen Wechselstrom und Gleichstrom umzuschalten.

1. Stellen Sie den Wahlschalter in die Stellung mA.
2. Schließen Sie die Prüfkabel an.
3. Drücken Sie die Taste TEST, und halten Sie sie während ca. 2 Sekunden gedrückt.
4. Wählen Sie mit der Taste entweder ac oder dc.
5. Nach einer kurzen Beruhigungszeit wird das Ergebnis automatisch angezeigt.

Drücken Sie die Taste , um die Frequenz des gemessenen Wechselstroms a.c. mA anzuzeigen. Die Frequenz wird im Bereich 16Hz-460Hz angezeigt. Drücken Sie die Taste nochmals, um den Wechselstrom a.c. mA anzuzeigen. Bei Eingängen von weniger als 10mA wird die Frequenz nicht angezeigt.

Speichern von Ergebnissen bei MΩ und Ω (RCL)

Nach einer Isolationsprüfung bzw. einer Durchgangsprüfung, wird das Ergebnis am Bildschirm angezeigt und kann mit zusätzlichen Angaben gespeichert werden. Es kann eine Stromkreisnummer (1-99) zugewiesen werden, und die Stromkreise können mit der Verteilertafelfunktion gruppiert werden. So können die Ergebnisse leicht in verschiedene Prüfpläne unterteilt werden, wenn sie in AVO PowerSuite heruntergeladen werden. Wenn die Ergebnisse angezeigt oder gedruckt werden, wird auf eine Veränderung in der Verteilertafel hingewiesen.

Ändern von Verteilertafeln

Vor einer Prüfung kann die Nummer der Verteilertafel wie folgt geändert werden:

1. Stellen Sie den Wahldrehschalter in die Stellung RCL. Der Kode rcl wird angezeigt.
2. Drücken Sie die Taste . Der aktuell ausgewählte Verteilertafelkode wird angezeigt, z.B. d01.
3. Diese Nummer kann mit den Tasten und verändert werden, bis die gewünschte Nummer angezeigt wird.
4. Die Nummer kann angenommen werden, indem die Taste gedrückt wird, oder der Vorgang kann durch Drücken der Taste EXIT (BEENDEN) abgebrochen werden.
5. Wenn die Nummer gespeichert ist, wird der Kode Std angezeigt (gleichzeitig ertönt ein langer Piepston), um zu bestätigen, daß die Daten gespeichert wurden.

Die Prüfungen können jetzt fortgesetzt werden, und alle folgenden Ergebnisse werden unter der neuen Verteilertafelnummer gespeichert.

Speichern eines Ergebnisses

Nach Abschluß der Messung und bei Anzeige des Ergebnisses:

1. Drücken Sie die Taste und halten Sie sie gedrückt. Nach ca. 1 Sekunde ertönt ein Piepston. Sowohl für den

Durchgang als auch die Isolation wird ein Kode gemäß der nachfolgenden Tabelle angezeigt. Dieser Kode wird verwendet, um den geprüften Stromkreis zu beschreiben und kann dementsprechend vom Benutzer geändert werden.

2. Der Kode kann geändert werden, indem die Tasten und gedrückt werden.
3. Der Kode kann angenommen werden, indem die Taste gedrückt wird, oder der Vorgang kann durch Drücken der Taste EXIT abgebrochen werden.
4. Die Stromkreisnummer wird dann als zwei Ziffern angezeigt, z.B. c01.

Hinweis: *Unter einer Stromkreisnummer können viele verschiedene Prüfungen gespeichert werden.*

5. Die Stromkreisnummer kann geändert werden, indem die Tasten und gedrückt werden, bis eine passende Nummer angezeigt wird.
6. Die Nummer kann angenommen und die Ergebnisse gespeichert werden, indem die Taste gedrückt wird, oder der Vorgang kann durch Drücken der Taste EXIT abgebrochen werden.
7. Wenn das Ergebnis gespeichert ist, wird der Kode Std angezeigt (gleichzeitig ertönt ein langer Piepston), um zu bestätigen, daß die Daten gespeichert wurden. Die Anzeige FULL (VOLL) weist darauf hin, daß kein weiterer Prüfspeicher vorhanden ist. Im Speicher können ca. 300 Ergebnisse gespeichert werden.

Zu speichernde Prüfung	Anzeigekode	Bedeutung
Durchgang	r1	Einfacher Stromkreis
	r2	Einfacher Stromkreis
	rr1	Ringschaltung
	rr2	Ringschaltung
	rrn	Ringschaltung
	r12	R1+R2 Rücklaufschaltung
Isolation	n_e	N-PE
	L_n	L-N
	L_E	L-PE
	L_L	L-L

Alle Daten löschen

1. Stellen Sie den Wahldrehschalter in die Stellung RCL. Der Kode rcl wird angezeigt.
2. Drücken Sie gleichzeitig die Tasten 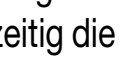 und . Der Kode dEL wird angezeigt.
3. Bestätigen Sie, daß die Daten nicht mehr benötigt werden, indem Sie die Taste 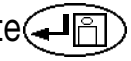 drücken, oder beenden Sie den

Vorgang, indem Sie eine beliebige andere Taste drücken. Der Kode rcl wird angezeigt.

Ergebnisse drucken (siehe Einrichtbetrieb)

1. Verbinden Sie den Drucker und das Gerät mit einem seriellen Druckerkabel.
2. Stellen Sie den Wahldrehschalter in die Stellung RCL. Der Kode rcl wird angezeigt.
3. Starten Sie den Ausdruck, indem Sie die Taste TEST drücken. Sie können jederzeit abbrechen, indem Sie die Taste drücken und gedrückt halten. Der Kode rcl wird angezeigt.

Gespeicherte Ergebnisse abrufen

Zuvor gespeicherte Prüfergebnisse können angezeigt werden, indem der Drehschalter in die Stellung RCL gestellt wird.

1. Stellen Sie den Wahldrehschalter in die Stellung RCL. Der Kode rcl wird angezeigt.
2. Wählen Sie die gewünschte Verteilertafel, indem Sie die Tasten und drücken. Die Veteiler-tafelnummern werden in der Reihenfolge angezeigt, in der die Ergebnisse gespeichert wurden. Wenn das Ende der Liste erreicht ist, ertönt ein langer Piepston.
3. Drücken Sie die Taste , um die Stromkreisnummern aufzulisten, die in der aktuell angezeigten Verteilertafel verwendet werden, oder drücken Sie die Taste EXIT, um zur Anzeige RCL zurückzukehren.
4. Wählen Sie die gewünschte Stromkreisnummer aus, indem Sie die Tasten und drücken. Die Stromkreisnummern werden in der Reihenfolge angezeigt, in der die Ergebnisse gespeichert werden. Wenn das Ende der Liste erreicht ist, ertönt ein langer Piepston.
5. Drücken Sie die Taste EXIT, um zum Auswahlbildschirm zurückzukehren, oder drücken Sie die Taste , um die gespeicherten Prüfkodes anzuzeigen. Zum Identifizieren der Prüfergebnisse werden die folgenden Prüfkodes verwendet:

Kode	Bedeutung
Con	Durchgangsprüfung
InS	Isolationsprüfung

6. Wählen Sie die gewünschte Prüfung, indem Sie die Tasten und drücken. Die Prüfungen werden in der oben angegebenen Reihenfolge angezeigt. Wenn das Ende der Liste erreicht ist, ertönt ein langer Piepston.
7. Drücken Sie die Taste EXIT, um zum Auswahlbildschirm für die Stromkreisnummer zurückzukehren, oder drücken Sie die Taste , um durch die gespeicherten Prüfergebnisse sowie zusätzliche Anschlußinformationen zu blättern.

Auf einen PC herunterladen

Die Reihe BMM wurde für die Benutzung mit AVO Powersuite für Windows ausgelegt, das die Prüfergebnisse akzeptiert und die Erstellung einer Reihe von Prüfzertikfikaten ermöglicht, z.B. Periodische Inspektion und Abschluß. Die mit dem Gerät gelieferte CD enthält das Programm AVO Download Manager. Dieses ermöglicht das Herunterladen von gespeicherten und aufgezeichneten Daten auf einen PC, das Erstellen von einfachen Prüfberichtsdateien, die in andere Anwendungen exportiert werden können, und kann zum Erstellen von Datensicherungen und Berichten bzw. Zertifikaten verwendet werden. Mit dem Download Manager können Sie auch einige Änderungen an Ihrer Geräteeinstellung vornehmen, z.B. die zweite Sprache der Ausdrucke. Die CD enthält eine Benutzeranleitung, die eine vollständige Angaben zum Gebrauch des Download Manager enthält.

Kabelkonfiguration

Normalerweise wird ein doppelendiges 9-fach Kabel mit D-förmigem weiblichen Stecker, das für die Verbindung von PC zu PC geeignet ist, benötigt. Dieses Kabel sollte nicht mehr als 3m lang sein. Ein Kabel ist als Zubehör erhältlich oder kann wie folgt hergestellt werden:

Signal	Insulations-prüfer	9-fach 'D'	25-fach 'D'
Rx	2	3	2
Tx	3	2	3
DSR	6	4	20
GND	5	5	7

Datenaufzeichnung

Datenaufzeichnung ist die automatische Aufzeichnung von Daten in regelmäßigen Abständen über eine längere Zeit, um später eingesehen zu werden. Die Ergebnisse werden im internen Speicher des Prüfgeräts gespeichert, können aber nur mit einem über die RS232-Schnittstelle angeschlossenen PC eingesehen werden.

Vergleich von Speicherung und Datenaufzeichnung

Mit Speicherung meinen wir das Speichern von einem Ergebnis jeder ausgeführten Prüfung nach dem anderen in einem Speicher. Jedes Ergebnis muß einzeln gespeichert werden, nachdem es den vom Benutzer auswählbaren Anschlußdaten und einer Stromkreisnummer sowie der zuvor gewählten Verteilertafelnummer zugeordnet wurde. Wenn die Datenaufzeichnung läuft, werden die Ergebnisse jedoch automatisch und kontinuierlich gespeichert, und es werden keine weiteren Angaben aufgezeichnet.

Speichern und Aufzeichnen sind zwei sich gegenseitig ausschließende Funktionen. Das Gerät kann nicht für die Ausführung beider Abläufe zum selben Zeitpunkt eingerichtet werden. Wenn ein Ergebnis gespeichert wird, werden alle aufgezeichneten Daten gelöscht und umgekehrt. Außerdem kann nur ein Satz aufgezeichneter Daten gespeichert werden. Eine neuer Aufzeichnungsvorgang löscht die vorherigen Daten. Dies unterscheidet sich vom Verhalten der Speicherfunktion, bei der Daten von aufeinanderfolgenden Prüfungen im Speicher gesammelt werden, bis er voll ist. Ein weiterer Unterschied zwischen Speichern und Aufzeichnen besteht darin, daß das Speichern nur für Isolations- und Durchgangsprüfungen gilt, während alle Arten von Messungen aufgezeichnet werden können (mit Ausnahme des Summerbereichs).

Starten eines Aufzeichnungsvorgangs

Sobald die Aufzeichnung freigegeben ist, und das Intervall eingestellt wurde, kann ein Datenaufzeichnungsvorgang beginnen. (Siehe Einrichtbetrieb)

1. Halten Sie die Taste gedrückt, und drehen Sie den Drehschalter zur gewünschten Funktion.
2. Lassen Sie die Taste los. Das Meldungsprotokoll wird angezeigt. Drücken Sie die Taste display, um zu bestätigen, daß die Aufzeichnung gewünscht wird, und eine Bestätigungsmeldung wird kurz angezeigt.
3. Durch Drücken der Taste EXIT wird die Aufzeichnung abgebrochen, und die Anzeige OFF erscheint.

Wenn die Datenaufzeichnung eingeschaltet ist, beginnt sie, sobald die Prüfung beginnt. Das heißt sofort, bei Volt-, Millivolt-, Ω, kΩ- und Kapazitätsfunktionen und nach Drücken der Taste TEST bei Isolations- und Milliampèrebereichen. Drücken Sie bei Milliampère- bzw. Millivoltfunktionen bei Bedarf die Taste nachdem die Aufzeichnung begonnen hat.

Anhalten eines Aufzeichnungsvorgangs

Während ein Aufzeichnungsvorgang läuft, kann er jederzeit angehalten werden, indem der Bereichsschalter gedreht wird. Alle Daten, die bis zu diesem Zeitpunkt aufgezeichnet wurden, bleiben erhalten. Die Aufzeichnung kann auch laufen gelassen werden, und sie hält automatisch an, kurz nachdem der Speicher voll ist.

Die Anzahl Ergebnisse, die aufgezeichnet werden können beträgt ca. 300, danach blinkt während einiger Minuten die Meldung ‘full’ (voll) auf der Anzeige. Das Gerät schaltet dann aus.

Andere Überlegungen

Denken Sie daran, daß die Batterien, je nach deren Zustand und des eingestellten Aufzeichnungsintervalls, möglicherweise nicht für den gesamten Aufzeichnungsablauf ausreichen. Falls die

Batterien versagen, bleiben alle bereits aufgezeichneten Ergebnisse erhalten. Beachten Sie, daß beim Aufzeichnen von Isolationsergebnissen die Taste TEST eingerastet ist.

Anzeigen aufgezeichneter Daten

Aufgezeichnete Ergebnisse können nur über die RS232-Schnittstelle des Geräts mit einem über ein serielles Kabel angeschlossenen PC abgerufen werden. Auf der mit dem Gerät gelieferten CD befindet sich ein Programm, das mit den Daten umgehen kann. Die Methode ist ähnlich der zum 'Herunterladen' von gespeicherten Ergebnissen. Sie finden weitere Angaben im Abschnitt 'Herunterladen auf einen PC'. Beachten Sie, daß bei Messungen von Millivolt Gleichstrom und Milliampère Gleichstrom das Frequenzergebnis immer auf null gesetzt ist. Bei Messungen von Millivolt Wechselstrom und Milliampère Wechselstrom wird das Frequenzergebnis auf null gesetzt, falls die Frequenz nicht gemessen werden konnte.

Einrichtbetrieb

Konfiguration des Seriendruckers

Der Drucker sollte auf 9600 baud, 8 bit-Daten, keine Parität und ein Stopbit eingestellt sein. Dieses Gerät verwendet eine spezielle isolierte serielle Schnittstelle, die vom PC oder dem Drucker mit Strom versorgt wird. Im unwahrscheinlichen Fall, daß Ihr PC bzw. Drucker nicht in der Lage ist, die Schnittstelle mit Strom zu versorgen, muß eine zusätzliche Versorgung bereitgestellt werden. Wenden Sie sich für Angaben dazu an den AVO Produktsupport.

Einrichtbetrieb des Druckers

Das Gerät kann nicht auf ein Besetztsignal von einem Drucker reagieren und wartet daher am Ende jeder Zeile. Diese Zeit ("Druckerverzögerungszeit") und die Druckersprache können geändert werden.

1. Drücken Sie die Taste , und halten Sie sie gedrückt. Drehen Sie dann den Wahldrehschalter von der Stellung OFF in die Stellung RCL. Der Kode Pdt wird angezeigt.
2. Lassen Sie die Taste los.

Zum Ändern der Druckergeschwindigkeit

1. Drücken Sie wiederholt die Taste 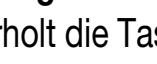 , um die Kodes zu durchlaufen, bis der Kode Pdt angezeigt wird.
2. Drücken Sie die Taste . Die aktuelle Einstellung wird angezeigt.
3. Drücken Sie wiederholt die Tasten und , bis die gewünschten Einstellung angezeigt wird.
4. Drücken Sie die Taste , um die neue Einstellung zu speichern. Der Piepser ertönt, und std wird angezeigt. Drücken Sie die Taste EXIT, um die neue Einstellung abzubrechen.

Zum Wählen der Druckersprache

1. Drücken Sie die Taste , um die Kodes zu durchlaufen und den Kode lng anzuzeigen.
2. Drücken Sie die Taste . Die aktuelle Druckersprache wird angezeigt – entweder 1 für Englisch oder 2 für die auf dem Typenschild auf dem Umschlag der Benutzeranleitung angegebene Sprache.

Hinweis: *Sprache 2 kann geändert werden - siehe unten.*

3. Drücken Sie die Taste , bis die gewünschte Spracheinstellung angezeigt wird.
4. Drücken Sie die Taste 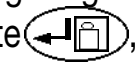 , um die neue Einstellung zu speichern. Der Piepser ertönt und std wird angezeigt. Drücken Sie die Taste EXIT, um die neue Einstellung abzubrechen.

Ändern der zweiten Druckersprache

Die Sprache 2 kann mit dem mit Ihrem Gerät gelieferten Programm AVO Download Manager geändert werden. Vollständige Angaben dazu befinden sich in der Benutzeranleitung auf der CD.

Datenaufzeichnung

Datenaufzeichnung freigeben/sperren:

Als Werkseinstellung ist die Aufzeichnung gesperrt und die Speicherung freigegeben.

1. Drehen Sie den Bereichsknopf in die Stellung ‘RCL’ und halten Sie gleichzeitig die Taste gedrückt. Pdt wird angezeigt.
2. Drücken Sie die Taste bis log (aufzeichnen) angezeigt wird
3. Drücken Sie die Taste , um den aktuellen Status der Aufzeichenfunktion anzuzeigen, d.h. ob sie ein oder aus ist.
4. Drücken Sie die Taste , um die Einstellung zwischen ein und aus umzuschalten.
5. Drücken Sie die Taste , um die Einstellung anzunehmen, oder die Taste EXIT, um abzubrechen.

Einstellen des Datenaufzeichnungsintervalls

1. Drücken Sie die Taste während log angezeigt wird. In der Anzeige erscheint Int.
2. Drücken Sie die Taste 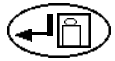 , um den Wert des Aufzeichnungsintervalls anzuzeigen (in Sekunden)
3. Setzten Sie das Intervall in Schritten von 10 Sekunden, indem Sie die Tasten und 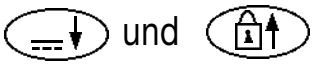 drücken (maximaler Wert 1990 Sekunden, minimaler Wert 10 Sekunden)
4. Drücken Sie die Taste , um den neuen Wert anzunehmen oder die Taste EXIT, um abzubrechen.
5. Drücken Sie die Taste EXIT nochmals, um die Einrichtbildschirme für die Aufzeichnung zu verlassen. Die Anzeige zeigt rcl an.

Verwenden der Geschalteten Sonde MEGGER SP1

Bedienung:
Die Sonde MEGGER SP1 ist ein Zubehörteil für als solche bezeichnete Installationsprüfgeräte von MEGGER. Wenn sie anstelle des vorhandenen 'niedrigen' Kabels an den speziell konstruierten Stecker angeschlossen wird, wirkt die SP1 als Fernauslösung für die Taste TEST zur Bedienung des Geräts und als 'niedrige' Sonde. Dies vereinfacht die Bedienung des Geräts und die zweihändige Sondenhandhabung. Die SP1 eignet sich für den Gebrauch mit MEGGER Isolationsprüfgeräten mit bis zu 1kV Ausgangsprüfspannung.

Sicherheit:
Erfüllt die Sicherheitsanforderungen für Doppelisolation nach IEC1010-2-031 (1995), EN61010-2-031 (1995), IEC1010-1 (1995), EN61010-1 (1995) Kategorie III*, 300V Phase gegen Erde und 500V Phase gegen Phase. Die Sonde ist mit einer internen, nicht ersetzbaren Sicherung ausgestattet, die den Benutzer schützt, falls die Sonde aus Versehen in Verbindung mit einem Prüfkabel in der niedrigen Klemme benutzt wird.
*Bezieht sich auf vorübergehende Überspannungen, die in Installationen mit fester Verdrahtung auftreten können.

⚠ **Verwenden Sie die Sonde nicht, wenn irgendeines ihrer Bestandteile beschädigt ist.**

Ersetzen der Batterie

Wenn das Symbol für schwache Batterieladung ⊣|⊢ erscheint, sind die Zellen beinahe leer und sollten so bald wie möglich ersetzt werden. Verwenden Sie Alkalizellen IEC LR6 (AA) oder wiederaufladbare NiCd-Zellen. Zum Einbauen bzw. Ersetzen der Zellen trennen Sie die Prüfkabel ab, schalten das Gerät AUS und lösen die unverlierbaren Schrauben hinten am Batteriefach. Nehmen Sie die Abdeckung ab, und trennen Sie den Batteriehalter von den Batteriekabeln. Achten Sie darauf, daß die Ersatzzellen mit der richtigen Polarität, entsprechend dem Schild im Batteriehalter eingesetzt werden. Schließen Sie den Batteriehalter wieder an die Batteriekabel an. Bringen Sie die Abdeckung des Batteriefachs wieder an, und befestigen Sie sie. Nehmen Sie die Zellen heraus, wenn das Gerät während längerer Zeit nicht benutzt werden wird.

Kontrollieren und Ersetzen von Sicherungen

Sie kontrollieren die Sicherung des Geräts, indem Sie in einen Isolationsbereich schalten, und die Taste TEST drücken. Wenn die Sicherung durchgeschmolzen ist, erscheint das Symbol —▭— . Zum Ersetzen der Sicherung trennen Sie die Prüfkabel ab, schalten das Gerät AUS und lösen die unverlierbaren Schrauben, mit denen die Abdeckung des Batteriefachs befestigt ist. Nehmen Sie die Abdeckung ab, und ersetzen Sie die Sicherung. Bringen Sie die Abdeckung des Batteriefachs wieder an, und befestigen Sie sie.

TECHNISCHE DATEN

(Alle Genauigkeiten sind für +20°C angegeben.)

Isolationsbereich

Nennprüfspannung	250V, 500V, 1000V (BMM2500)
(Gleichstrom):	50V, 100V, 250V, 500V, 1000V (BM2580)
Genauigkeit der Prüfspannung:	+15% maximal bei offenem Stromkreis
Kurzschlußstrom:	<2mA
Prüfstrom unter Last:	1mA bei min. Durchgangswert der Isolation gemäß BS7671, HD384 und IEC 364, max. 2mA

Genauigkeit:

(BMM2500)

Bereich	Ganze Skala	Genauigkeit
1000V	20GΩ	±2% ±2 Ziffern ±0,2% pro GΩ
500V	10GΩ	±2% ±2 Ziffern ±0,4% pro GΩ
250V	5GΩ	±2% ±2 Ziffern ±0,8% pro GΩ

(BMM2580)

Bereich	Ganze Skala	Genauigkeit
1000V	200GΩ	±2% ±2 Ziffern ±0,2% pro GΩ
500V	100GΩ	±2% ±2 Ziffern ±0,4% pro GΩ
250V	50GΩ	±2% ±2 Ziffern ±0,8% pro GΩ
100V	20GΩ	±2% ±2 Ziffern ±2,0% pro GΩ
50V	10GΩ	±2% ±2 Ziffern ±4,0% pro GΩ

Hinweis: *Die obengenannten Daten gelten nur, wenn hochwertige Silikonkabel verwendet werden.*

Meßbereich:	0,01MΩ bis 200GΩ (0-100GΩ auf Analogskala).
Betriebsbereich nach EN61557:	0,10Ω bis 1,00GΩ
Kriechstrom:	10% ±3 Ziffern

Durchgang

Meßbereich:	0,01Ω bis 99,9Ω (0 bis 10Ω auf Analogskala)
Betriebsbereich nach EN61557:	0,10Ω bis 99,9Ω
Genauigkeit:	±2% ±2 Ziffern
Spannung bei offenem Stromkreis:	5V ±1V
Prüfstrom:	210mA ±10mA (0-2Ω)
Nullpunktverschiebung bei Sonden:	typischerweise 0,10Ω
Nullen des Kabelwiderstands:	Bis zu 9,99Ω
Rauschunterdrückung:	1V Wirkspannung 50/60Hz
Summer:	Läuft bei weniger als 5Ω (ca.).

Widerstand

Meßbereich: 0,01 kΩ bis 9,99MΩ
(0 bis 100 MΩ auf Analogskala)
Genauigkeit: ±3% ±2 Ziffern
Spannung bei offenem Stromkreis: 5V ±1V
Kurzschlußstrom: 25µA ±5µA

Spannung

Meßbereich: ±1V bis ±500V
(0 bis 1000V auf Analogskala)
Genauigkeit: 0-500V d.c. ±2% ±3 Ziffern
0-500V a.c. (50/60Hz) 2% ±3 Ziffern
0-500V 400 Hz a.c. ±5% ±3 Ziffern
Eingangswiderstand: ca. 200kΩ.
Detektorschwellenwert: 1V

Millivolt

Meßbereich: ±0,1mV bis ±1999mV
(0 bis 1000mV auf Analogskala)
Genauigkeit: 0,1mV bis 10mV d.c. bzw. a.c. (50/60 Hz) ±2% ±5 Ziffern
10mV bis 1999mV d.c. bzw. a.c. (50/60 Hz) ±2% ±3 Ziffern
0,1mV bis 10mV a.c. (16-460 Hz) ±5% ±7 Ziffern
10mV bis 1999mV a.c. (16-460 Hz) ±5% ±5 Ziffern
Nullen von Millivolt
Gleichstrom: bis 9,9mV
Eingangswiderstand: >3MΩ

Kapazität

Meßbereich: 0,1nF to 9,99mF
Genauigkeit: ±3% ±2 Ziffern ±0,2nF
Nullen von mF: bis 10nF

Milliampère

Meßbereich: 0,1mA bis 500mA (0 bis 1000mA auf Analogskala)
Genauigkeit: 0,1mA bis 10mA d.c. bzw. a.c. (50/60 Hz) ±2% ±5 Ziffern
10mA bis 500mA d.c. bzw. a.c. (50/60 Hz) ±2% ±3 Ziffern
0,1mA bis 10mA a.c. (16-460 Hz) ±5% ±7 Ziffern
10mA bis 500mA a.c. (16-460 Hz) ±5% ±5 Ziffern

Frequenz

Meßbereich: 16Hz bis 460Hz
Genauigkeit: ±1% ±1Ziffer

Grundfehler und Betriebsfehler für die Isolations- und Widerstandsbereiche.

Der Grundfehler ist die maximale Ungenauigkeit des Geräts unter idealen Bedingungen, während der Betriebsfehler die maximale Ungenauigkeit unter Berücksichtigung von Batteriespannung, Temperatur, Interferenzen und ggf. Systemspannung und -frequenz ist. Nach Bestimmung des Betriebsfehlers können wir den Meßbereich berechnen. Dies ist der Bereich der Messung, in dem der Fehler im Betrieb weniger als 30% des Ablesewerts beträgt. Bei Digitalgeräten spielt der Fehler der Anzahl Ziffern eine Rolle - wenn z.B. ein Wert von 0,10Ω im Durchgangsbereich gemessen wurde, kann ein Wert im Bereich von 0,07Ω bis 0,13 Ω angezeigt werden, was einem maximalen Fehler von 30% entspricht. Daher ist der Meßbereich für die Messung von niedrigen Widerständen 0,10 Ω bis 99,9 Ω. Wenn kontrolliert wird, daß eine Messung eine Grenze nicht überschreitet, muß der Betriebsfehler berücksichtigt werden. Dies kann mit den nachfolgenden Tabellen schnell und einfach erfolgen. Diese garantieren, daß der gemessene Wert größer bzw. kleiner ist als der jeweils angegebene Grenzwert.

Isolationswiderstand – MΩ

Grenze	Min. angezeigter Ablesewert	Limit	Min. Indicated Reading
0,10	0,14	2,00	2,12
0,20	0,25	3,00	3,16
0,30	0,35	4,00	4,20
0,40	0,46	5,00	5,24
0,50	0,56	10,00	10,8
0,60	0,66	20,00	21,2
0,70	0,77	30,00	31,6
0,80	0,87	40,00	42,0
0,90	0,98	50,00	52,4
1,00	1,08	100,00	94,0

Durchgangswiderstand – Ω

Grenze	Max. angezeigter Ablesewert	Limit	Max. Indicated Reading
0,10	0,06	2,00	1,88
0,20	0,15	3,00	2,84
0,30	0,25	4,00	3,80
0,40	0,34	5,00	4,76
0,50	0,44	10,00	9,56
0,60	0,54	20,00	18,8
0,70	0,63	30,00	28,4
0,80	0,73	40,00	38,0
0,90	0,82	50,00	47,6
1,00	0,92	100,00	92,0

Sicherheit

Die Geräte erfüllen die Anforderungen für Doppelisolation nach IEC 1010-1 (1995), EN 61010-1 (1995) für Kategorie III*, 300V Phase gegen Erde (Masse) und 440V Phase gegen Phase, ohne Notwendigkeit getrennt abgesicherter Prüfkabel. Bei Bedarf sind abgesicherte Prüfkabel als Sonderzubehör erhältlich.

* Bezieht sich auf vorübergehende Überspannungen, die in Installationen mit fester Verdrahtung auftreten können.

Erfüllt die Anforderungen der folgenden Teile der EN61557, Elektrische Sicherheit in Niederspannungsanlagen bis 1000VAC und 1500VDC - Geräte zum Prüfen, Messen und überwachen von Schutzeinrichtungen:

Teil 1 - Allgemeine Anforderungen

Teil 2 - Isolationswiderstand

Teil 4 - Widerstand der Erdverbindung und Potentialausgleich

Sicherung

500mA (F) 500V, 32x 6mm Keramik HBC min. 10kA.

E.M.V.

Die Geräte entsprechen EN 50081-1 und EN 50082-1 (1992).

Stromversorgung

Batterietyp: 6x1,5V Alkalizellen Typ IEC LR6 oder 1,2V NiCd wiederaufladbare Zellen.

Batterielebensdauer (typische Werte):

2100 x 5 Sekunden Isolationsprüfungen bei 1kV.
3200 x 5 Sekunden Isolationsprüfungen bei 500V
4000 x 5 Sekunden Isolationsprüfungen bei 250V
2700 x 5 Sekunden Durchgangsprüfungen
4700 x 5 Sekunden kΩ-Prüfungen

Umgebungsbedingungen

Betriebsbereich	-5 bis +40°C
Betriebsfeuchte	90% RF bei 40°C max.
Aufbewahrungstemperaturbereich	-25 bis +65°C
Kalibrationstemperatur	+20°C
Maximale Höhe ü.M.	2000m
Staub- und Wasserschutz	IP54
Temperaturkoeffizient	<0,1% pro °C
Gewicht	742g
Abmessungen	110 mm x 220 mm x 45 mm
Reinigung	Mit einem sauberen, mit Seifenwasser oder Isopropylalkohol befeuchteten Tuch abwischen

Zubehör

Mitgeliefert:	**Teilenummer**
Prüfkabelsatz	6220-437
Prüf- & Tragekoffer	6420-112

Sonderzubehör:	**Teilenummer**
Abgesicherter Kabelsatz, FPK8	6111-218
Geschaltete Prüfsonde SP1	6220-606
Prüfprotokollkarten (Packung à 20 Stk)	6111-216
AVO PowerSuite	6111-237
AVO NiceOne	6111-403
9-fach serielles Kabel	25955-025

Veröffentlichungen:	
‘A Stitch in Time’	AVTM21-P8B
‘Testing Electrical Installations’	6172-129

REPARATUR UND GARANTIE

Der Stromkreis des Geräts enthält auf statische Ladung empfindliche Komponenten, und die Leiterplatte muß vorsichtig gehandhabt werden. Wenn der Schutz eines Geräts beeinträchtigt wurde, sollte es nicht benutzt werden, und zur Reparatur durch entsprechend ausgebildetes und qualifiziertes Personal eingeschickt werden. Der Schutz kann dann beeinträchtigt sein, wenn das Gerät beispielsweise sichtbar beschädigt ist, die vorgesehenen Messungen nicht ausführt, unter ungünstigen Bedingungen über längere Zeit gelagert wurde oder extremen Transportbeanspruchungen ausgesetzt war.

Neue Gerät haben eine 3-jährige Garantie ab dem Datum des Kaufs durch den Benutzer.

Hinweis: *Jede vorherige unberechtigte Reparatur bzw. Anpassung macht die Garantie automatisch ungültig.*

Gerätereparatur und Ersatzteile

Wenn Sie Service-Ansprüche für MEGGER®-Geräte haben, wenden Sie sich bitte an:

AVO INTERNATIONAL
Archcliffe Road
Dover
Kent, CT17 9EN.
England.
Tel: +44 (0) 1304 502243
Fax: +44 (0) 1304 207342

or

AVO INTERNATIONAL
Valley Forge Corporate Centre
2621 Van Buren Avenue
Norristown, PA 19403
U.S.A.
Tel: +1 (610) 676-8579
Fax: +1 (610) 643-8625

or an approved repair company.

Anerkannte Reparaturbetriebe

Eine Reihe unabhängiger Gerätereparaturbetriebe wurden für die Reparatur der meisten MEGGER®-Geräte anerkannt und verwenden echte MEGGER®-Ersatzteile. Wenden Sie sich für Angaben zu Ersatzteilen, Reparatureinrichtungen und Beratung zum besten Vorgehen an den zuständigen Händler bzw. Vertreter.

Einschicken eines Geräts zur Reparatur

Wenn Sie ein Gerät zur Reparatur an den Hersteller zurückschicken, muß es mit vorausbezahltem Porto an die entsprechende Adresse geschickt werden. Eine Kopie der Rechnung und des Lieferscheins sind gleichzeitig mit Luftpost zu schicken, um die Zollabfertigung zu beschleunigen. Dem Absender wird bei Bedarf vor Aufnahme der Arbeit an dem Gerät ein Reparaturkostenvoranschlag überreicht, der Frachtkosten und andere Kosten aufweist.

Portable Oil Test Set
OTS 60PB

MEGGER®

FOSTER™

User Guide
Guide de l'utilisateur
Gebrauchsanleitung

Contents

Safety Warnings 2
General Description 3
Applications 5
Specification 6
Accessories 7
Operation 8
Warnings 8
Precautions 8
Preparing the test vessel and electrodes 9
Loading the test vessel 9
Preparing the oil test set 10
Options, Display Contrast, Language Select, View Last Results,
Pass/Fail Setup
Error Monitoring
Automatic testing sequences 11
5 minute test, AS 1767, BS 148, BS 5874, CEI 10-1, ГОСТ 6581,
IEC 156, IP 295, NFC 27, SABS 555, UNE 21 AND VDE 0370 tests.
ASTM D877, ASTM D1816
Withstand (Proof) Tests 16
BS 5730a
Withstand (Proof) Test A
Withstand (Proof) Test B
Self check tests: checks for major safety and functional parts 19
Fuse replacement 19
Printing 20
Sampling and Testing Oil for Dielectric Strength 22
Causes of Bad Oil, Appearance of the Sample, Cleanliness of the Apparatus,
Precautions Necessary During Sampling
Repair and Warranty 23
Mode d'Emploi 24
Betriebsanweisung 39

Illustrations

Figure 1 ***OTS 60PB*** oil test set layout 4
Figure 2 Oil test set controls etc. 4
Figure 3 Oil test set rear panel 4
Figure 4 Example menu screen 10
Figure 5 Example initial stand time screen 12
Figure 6 Example voltage screen 12
Figure 7 Example stirring screen 12
Figure 8 Example intermediate stand time screen 13
Figure 9 Example average breakdown voltage screen 13
Figure 10 Example pass screen 13
Figure 11 Example of electrode gap selection screen 16
Figure 12 Example of display for starting BS 5730a Proof Test 16
Figure 13a Examples of BS 5730a Result Screen 17
Figure 13b Examples of BS 5730a Result Screen 17
Figure 14 Example of display for setting the proof test voltage level 18
Figure 15 Example of options in the proof test 18

SAFETY WARNINGS

- **Safety Warnings** and **Precautions** must be read and understood before the ***OTS 60PB*** is used. They **must** be observed during use
- The ***OTS 60PB*** must only be used in the way intended and for the stated purposes described by **AVO INTERNATIONAL LIMITED**.
- The ***OTS 60PB*** must not be used if any part of it is damaged.
- The ***OTS 60PB*** must not be used immersed or with rain falling on it.
- The ***OTS 60PB*** **must only** be used for testing electrical grades of insulating liquids. No other objects or substances animal, vegetable or mineral should be placed in the test chamber.
- The ***OTS 60PB*** **must** only be used with the recommended and supplied test vessel. The vessel must be present when any test sequence is initiated.
- Before adjusting the electrode gap, the test set **must** be de-energized from the rear switch.
- The ***OTS 60PB*** **must** only be used with the battery charger supplied. A proprietary mains plug must be used and the supply protected using isolation by disconnection devices, i.e. fuses and/or circuit breakers. The maximum rating of these fuses or circuit breakers should be 5 A. The charger must not be used when damaged, immersed or with rain falling on it.
- Replacement fuses **must** be of the correct type and rating.
- The vehicle lead set **must** only be powered from a 12 V nominal source, negative to vehicle metalwork, using only the fused connector and Lead Set available as an accessory.
- Adjustment or repair **must** only be carried out by a qualified instrument technician who is aware of and takes precautions from the hazards involved while working on high voltage equipment. Capacitors inside the test set may still be charged even if the apparatus has been disconnected from the supply (especially under fault conditions). The work must only be carried out by the manufacturer or one of his approved agents.
- Refer also to page 8 for further **Warnings**, explanations and **Precautions**.

NOTE

THIS TEST SET MUST ONLY BE USED BY SUITABLY TRAINED AND COMPETENT PERSONS.

Symbols used on the Test Set

Caution: Refer to accompanying notes.

Risk of electric shock.

Equipment complies with relevant EU Directives

Earth terminal

General Description

The OTS 60PB is a 0 – 60 kV, battery powered portable dielectric strength oil test set. Its size and weight make it suitable for on-site assessment of insulating oil quality. The dielectric strength test it performs is an important deciding factor in knowing whether to retain or replace the oil. Breakdown voltage is measured, averaged and displayed under the control of built-in programme sequences. Go/no-go testing is available.

The OTS 60PB is self contained in an ever-ready carry bag complete with its accessories; four vessels with lids, a mains powered battery charger, a 12 V vehicle lead set and a gap gauge for electrode spacing. Spherical electrodes of 12.7mm diameter are fitted as standard with options for mushroom or cylindrical electrodes.

The instrument is housed within a metal case which forms an equipotential enclosure for the high and low voltage circuits. An access door allows loading of the oil sample to be tested and is safety interlocked with two forced break switches to BS 5304.

The action of pulling down the access door to the horizontal position raises the test electrodes and stirrer to allow, easy, slide in loading of the filled oil vessel.

The oil vessels are transparent and heat resistant to 180 °C. An optional close fitting lid is available to prevent contaminants from entering the vessel after cleaning and filling. See '**Accessories**'.

The working surfaces in the oil testing area are all easily wiped clean from oil spills or contamination.

The OTS 60PB is fully portable with its own rechargeable battery built-in. The display carries a reminder to top up the battery charge every six months. The nominal running time for continuous testing is 12 hours which means the set can be used for many weeks without recharging in normal intermittent use.

The high voltage testing electrodes are of the type and dimensions found in most national specifications. Adjustment of the electrode gap and cleaning the electrodes is simple and convenient. Alternative electrode shapes needed for some national specifications are easily available and fitted.

Where the specification requires the oil sample to be stirred a small plastic paddle is rotated in the oil to effectively remove carbon produced by the discharge at oil breakdown.

Two methods of oil breakdown detection are used and are sensitive enough to remove the need to manually watch for transient sparkover as mentioned in some specifications.

The control panel has an on/off button and three softkey function buttons for all test selections. A rear switch disconnects the battery for storage periods over six months.

Choice of language and choice of national and user proof tests as well as pass/fail de-skilled tests are all selected and started from a user friendly menu on the l.c.d. display. Reminders are included to fit the vessel, use the appropriate electrodes and set the necessary gap.

The instrument automatically shuts down around 25 minutes after completion of a test sequence in order to maximise battery life. The last results may be recovered from the non-volatile memory after this shutdown.

At the end of each automatic test the individual test results from the sequence are averaged, and the standard deviation is calculated, and displayed. The individual breakdown values may be reviewed if required.

OTS 60PB follows the oil testing sequences described in many national and other specifications among which are: British BS 148, BS 5730a (automatic proof testing), BS 5874; International IEC 156, American ASTM D877 ASTM D1816, German VDE 0370, French NFC 27, Spanish UNE 21, Italian CEI 10-1, Russian ГОСТ 6581, South African SABS 555, Australian AS 1716 and Institute of Petroleum IP 295.

Two types of withstand (proof) testing of an oil sample are available. The principle with these tests is to subject the oil sample to a specified voltage for a defined length of time (1 minute) to see if it will withstand that voltage. In one of the tests the voltage is removed after a minute, in the other test, the voltage continues to rise after the minute until breakdown or the maximum value is reached. Withstand (proof) tests can be set up to the user's own requirements, and then repeatedly called up to quickly test oil under known fixed conditions.

Figure 1 OTS 60PB Oil Test Set Layout

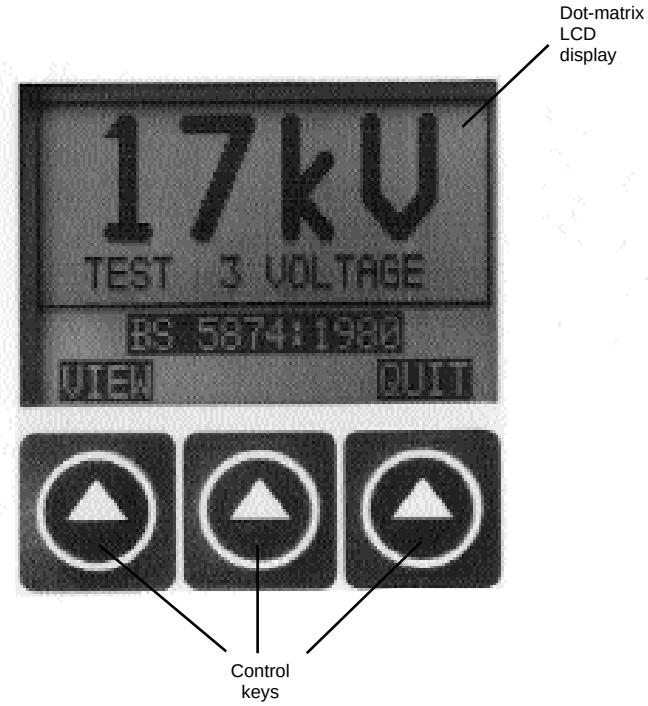

Figure 2 Oil Test Set Controls

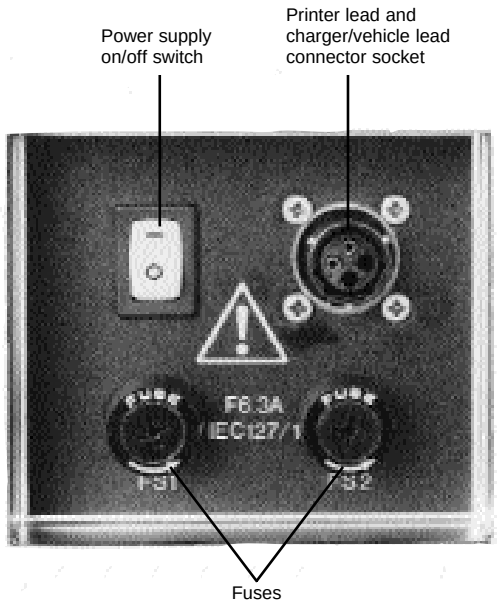

Figure 3 Oil Test Set Rear Panel

Applications

The OTS 60PB is used for determining the dielectric strength of liquid insulants such as insulating oils used in transformers, switchgear, cables and other electrical apparatus. It is portable and suitable for testing on site as well as in the laboratory.

The test set is fully automatic. The operator has only to prepare the test vessel, load it with sample oil, place it in the test chamber, select the appropriate specification for the tests and then start the test sequence. The test set carries out automatically (and if necessary unattended) the sequence of tests as defined by the pre-selected national specification.

Oil testing specifications, for which the set is pre-programmed, are as follows:–

Standard test specification selected	EN60156 AS 1767 BS 5874 BS 5730 IEC 156 IP 295 NFC 27 SABS 555 UNE 21	CEI 10-1 ГОСТ 6581 VDE 0370 STAS 286	ASTM D1816	ASTM D877
Electrode shape	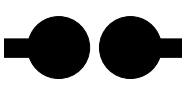	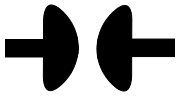	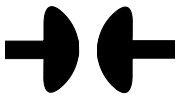	
Electrode spacing	2,5 mm		2,0 mm	2,5 mm

A 5 minute test sequence is also provided so that the operator may quickly obtain an idea of the breakdown value of an oil sample.

Two types of semi automatic withstand (proof) testing of an oil sample are available. The principle with these tests is to subject the oil sample to a specified voltage for a defined length of time (1 minute) to see if it will withstand that voltage. In one of the tests the voltage is removed after a minute, in the other test the voltage continues to rise after passing for one minute until breakdown or the maximum value is reached. Withstand (proof) tests can be set up to the user's own requirements, and then repeatedly called up to quickly test oil under known fixed conditions.

The test results can be reviewed on the LCD or printed via the RS232 interface. An optional, battery operated printer is available to obtain a hard copy of the results.

The safety features incorporated in the test set's design include two forced break switches used as described in BS 5304. These are interlocked with the oil vessel loading door.

Power cord

If the power cord plug is not suitable for your type of socket outlets (receptacles), do not use an adaptor. You should use a suitable alternative power cord, or if necessary change the plug by cutting the cord and fitting a suitable plug. The colour code of the cord is:

Earth (Ground)	**Yellow/Green**
Neutral	**Blue**
Phase (Line)	**Brown**

If using a fused plug, a 3 Amp fuse to BS 1362 should be fitted.

Note: A plug severed from the power cord should be destroyed, as a plug with bare conductors is hazardous in a live socket outlet (receptacle).

Specification

Output Voltage (max.)
60 kV r.m.s. (30 kV – 0–30 kV) at 61,8 Hz

Parameters of Standard Test Specifications

Test Specifications Parameters							
Test Spec.	Initial Stand Time	Rate of rise of Test Voltage	Intermediate Stir Time	Intermediate Stand Time	Number of Tests	Maximum Test Time	Results
5 min test	1 min.	2 kV/s	30 s	30 s	3	4 min. 30 s	Mean
BS 148 etc.	3 min	2 kV/s	1 min	1 min	6	16 min	Mean
IEC156	5 min.	2 kV/s	optional	2 min	6	18 min.	Mean
EN 60156	5 min	2 kV/s	optional	2 min	6	18 min	Mean
ASTM D877	2 min. 20 s	3 kV/s	-	1 min.	5	8 min.	Mean
ASTM D1816	3 min.	0,5 kV/s	Continuous	1 min.	5	17 min.	Mean
UNE21	10 min	2 kV/s	1 min.	4 min.	6	38 min.	Mean of last 5 tests
Withstand 'A'		2 kV/s	Ramps to preselected value for 1 minute or breakdown				
Withstand 'B'		2 kV/s	As above and continues to breakdown or maximum value of test set				
BS5730a	-	2 kV/s	1 min.	1 min.	Withstand test at 22 kV, 30 kV or 40 kV (depending on equipment category and electrode gap) for 1 min If break-down occurs another two tests are carried out, both must pass for sample to be accepted.		
BS5730a LEPLC	1min stir + 1 min stand	2 kV/s	1 min.	1 min.	As per BS5730a but ramps to Breakdown after test is passed.		
BS148 etc. includes BS 5874, VDE 0370, NFC 27, CEI 344, ΓOCT 6581, SABS 555, AS 1767, STAS 286 and IP 295. NFC 27, STAS 286 and UNE 21 omit the first breakdown value from the average calculation.							

Display
Dot-matrix liquid crystal display giving alpha-numeric information and kV test voltage to two digits.

Temperature Range
Operation: 0 °C to + 40 °C
Storage: –30 °C to +65 °C

Humidity Range
Operating: 80% RH at 40 °C (non-condensing)
Storage: 93% RH at 40 °C, 95% RH at 25 °C cyclic (in accordance with BS 2011 Part 2–1)

Input Socket
Battery charger or 12 volt vehicle supply inlet socket.

Safety
The test set meets the requirements for safety to IEC 1010-1 (1995), EN61010 (1995). The safety interlock is to BS 5304 (1988) 'Guarding of Machinery' standard.

E.M.C.
The test set meets EN50081-1 and 50082-1 (1992).

Power Supply
Internal rechargeable 12 V, 12 Ah, battery (typically 12 hours continuous testing). Charger supply 90 V to 264 V, 50/60 Hz.

12 volt, negative to chassis, vehicle lead set (does not recharge internal battery)

Fuses
2 x F6, 3 A, IEC 127/1, 20 mm x 5 mm, HBC fuses.

Dimensions
373 mm x 259 mm x 247 mm (14 11/16 in x 10 3/16 in x 9 3/4 in) basic without accessories.

Weight
19 kg (42 lb) basic without accessories.

Cleaning
The exterior case can be wiped with a clean cloth dampened with an alcohol based cleaning fluid.

Accessories

Supplied with the test set	**Part No.**
Padded protective carrying case with handle and shoulder strap.	
4 x 600 ml capacity oil test vessels	6420-102
Pair of spherical electrodes (fitted)	6220-484
Pair of mushroom electrodes	6220-482
Pair of cylindrical electrodes	6220-483
Electrode spacing gauges *	5152-293 to 296
Battery charger unit	6331-659
Printer lead, OTS 60PB to 25 way ‘D’	6340-091
Spare fuse	25413-285
User Guide	6171-585
Supplied as optional extras	
Close fitting test vessel lid	6121-402
Pack of 10 reusable / disposable oil test vessels	6220-487
Lead for connection to a vehicle battery via the cigar / cigarette lighter socket	6231-509
Pair of cylindrical electrodes with 0,5 mm edge radius †	6220-538
Printer kit	6220-568
Paper roll — 57,5 mm wide, 15 m long, 50 mm diam.	25995-001
Ribbon – Epson part no. ERC-09 (IRC160)	25995-002
Printer lead	6340-091

† The optional cylindrical electrodes with a 0,5 mm edge radius do not meet the ASTM D877 specification. They give a higher breakdown value than the standard cylindrical electrode which will allow results to be compared between instruments with a similar electrode design.

* The new spacer gauges are no longer big enough to have the diameter marked on them. They now have a series of grooves cut into them to state the difference between them which are as follows:

1 ring - 1mm
2 rings - 2mm
3 rings - 2.5mm
4 rings - 4mm

Operation

Warnings – read and apply the safety warnings on page 1.

1. Ensure that the battery charger is properly earthed before use. The battery charger should only be connected to a socket outlet with a functional earth conductor.

2. The battery charger must only be used with a proprietary mains plug and the supply protected using isolation by disconnection devices, i.e. fuses and/or circuit breakers. A fuse or circuit breaker up to a maximum of 5 A should be used. The charger must not be used when damaged, immersed or with rain falling on it.

3. The OTS 60PB must only be used to test electrical grades of insulating oils. Other flammable materials such as petrol must not be tested.

4. Ensure that the test chamber and door tray are always scrupulously clean, particularly prior to a test. Wipe away any spilled oil in the test chamber or on the test vessel when necessary.

5. Ensure the test electrodes and surroundings are scrupulously clean before a test. Ensure the electrodes are free from pitting.

6. The test set is fitted with high breaking capacity ceramic fuses to IEC 127/1. It is essential that any replacement fuses fitted to the test set conform to this specification (for full details see the Specification section). Glass fuses MUST NOT be used due to their low rupturing capacity.

7. Only the correct oil test vessels must be used. These are supplied by AVO INTERNATIONAL LIMITED and the reference part number is given in the Accessories section. A test vessel must always be present when operating the test set.

8. When setting the electrode gap or spacing always de-energize the oil test set using the switch located on the rear of the instrument.

9. Casing panels or other parts must not be removed. To do so may expose live parts of the circuit.

   Adjustment or repair must only be carried out by a qualified instrument technician who is aware of and takes precautions from the hazards involved while working on high voltage equipment. Capacitors inside the test set may still be charged even if the apparatus has been disconnected from the supply especially under fault conditions.

   Any warranty covering the test set will be invalidated unless the work is carried out by the manufacturer or one of his approved agents.

10. Whenever it is likely that the test set's protection has been impaired, it must not be used but rather taken out of service and returned to the manufacturer or his approved agent for repair.

    The protection is likely to be impaired if, for example, the test set shows visible signs of damage; for example to the membrane switches and viewing areas; fails to perform the intended measurements; has been subjected to prolonged storage under unfavourable conditions or has been subjected to severe transport stresses.

11. If the oil test set has been exposed to extreme changes in humidity or temperature it must be allowed to acclimatise to its new conditions for a period of not less than 2 hours before use.

12. It is inadvisable to transport the test set with a full vessel fitted in the test chamber.

Precautions
The internal battery should be re-charged at least every 6 months to prolong its working life.

The test set's circuit contains static sensitive devices. Care must be exercised in handling the printed circuit boards. This should be done in accordance with DEF STAN 59-98 and BS 5783 specifications for handling electrostatic sensitive devices. Any unauthorized prior repair or adjustment will automatically invalidate the Warranty covering the test set.

Operation

Preparing the Test Vessel and Electrodes

1. Clean the oil test vessel thoroughly before pouring the oil sample. Methods for cleaning are usually detailed in the national specifications for oil testing and should be adhered to. Rinsing with part of the oil sample is normally required. The sample should be poured into the vessel, avoiding the formation of air bubbles, up to the 500 ml level mark. (Cover the test vessel when transferring the oil from the filling area to the Oil Test Set to prevent contamination.)

2. Clean the electrodes and all surrounding parts that come into contact with the oil sample to be tested. Rinsing with part of the oil sample is recommended before the final filling with the oil to be tested. It may prove to be convenient to allow the oil to stop dripping from the electrodes before removing the oil vessel after the door has been opened. This will reduce the need for cleaning the test chamber floor.

3. Set the gap between the electrodes according to the requirement of the testing specification being undertaken. A spacing gauge is provided in the accessory kit for this purpose. The clamp screws at the bottom of both electrode supports should be slackened and the sliding arms moved so that the gap is approximately central between the two supports. Tighten the clamp screw on one support to hold one side firmly, then adjust the other so that when the gauge is passed between the electrodes it touches both simultaneously. Tighten the clamp screw on the second support. Make sure that the electrodes are firmly finger tight on the threaded spindles. Recheck the gap after it has been set.

Loading the Test Vessel

1. Open the test chamber door by pulling it downward to the horizontal position.

   Remove the lid (if fitted) from the filled oil vessel to be tested and slide the vessel across the door tray into the back stop in the test chamber.

   Lower the test electrodes into the oil by closing the door fully. Slowly closing the door reduces the risk of air entrapment in the oil.

   The oil sample in the test vessel is now readily for dielectric strength testing.

   Note:– Upon completion of the test sequence remove the vessel from the test chamber and cover to prevent contamination.

Operation

PREPARING THE OIL TEST SET

1. Expose the display and oil vessel loading areas by pulling the protective covers away. Connect the mains powered charger to the rear socket and power it up unless the equipment is to be used powered from its internal battery. Alternatively connect the 12 volt vehicle lead set to the rear socket and a 12 V, negative to chassis, vehicle cigar/cigarette lighter socket only when the internal battery is exhausted and no mains supply is available for the mains charger. Allow 15 minutes to bring the internal battery up to a usable condition before starting tests.

2. Switch on using the rear switch, then if necessary, press the ON/OFF front panel switch to start. The rear switch need only be turned off when long periods of storage of over six months are expected. The copyright screen appears on the display for a brief time and is followed by the main programme menu screen. The selections available from the main menu are:–

OPTIONS	AS 1767
BS 148	ASTM D877
BS 5730a	ASTM D1816
BS 5730a LEPLC	CEI 10-1
BS 5874	ГОСТ 6581
IEC 60156	IP 295
IEC 156	NFC 27-221
WITHSTAND	SABS 555
5 MINUTE TEST	UNE 21
	VDE 0370
	SELF CHECK

The main menu screen allocates labels to the three control keys below the display, namely (from left to right) '▲', '▼' and 'SELECT'. The arrow head keys '▲' and '▼' allow scrolling up and down through the menu options and the 'SELECT' key makes the highlighted option active.

Note:– The screen shows only five menu options at any one time and those in view will depend upon the last option used. When scrolling the highlighted option is the one ready for selection.

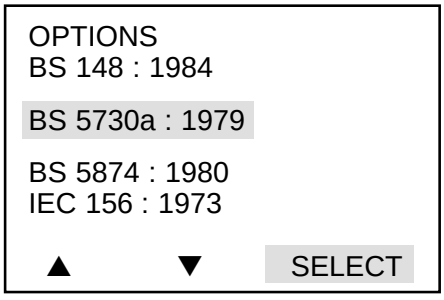

Figure 4 Example Menu Screen

3. Select the required option and proceed as indicated by the instructions which follow on the display.

The following text explains the operation of each of the menu options. Not all of them will be of interest to the user at any one time.

Options

The 'OPTIONS' sub-menu makes available the following:–

LANGUAGE
VIEW LAST RESULTS
DISPLAY CONTRAST
PASS/FAIL SETUP
PRINTER CONTROL
MENU

Scroll through and select as before.

Operation

Display Contrast
When 'DISPLAY CONTRAST' is selected the darker/lighter keys may be used to adjust the readability of the display screen. Press 'SELECT' to return to the 'OPTIONS' sub-menu.

Note:– A quick way to bring the Display Contrast into view on the screen is to hold the middle key pressed while switching the test set on. The key must be held for approx. 1 second after releasing the on/off key.

Language Select
The display screen can be set to read in any one of six languages:–

ENGLISH
FRANCAIS
DEUTSCH
ESPANOL
PORTUGUES
ITALIANO

Scroll through and select as before. Pressing 'SELECT' returns to the sub-menu.

Note:– A quick way to bring the language screen into view on the screen is to hold the right hand key pressed while switching the test set on and releasing the key when the copyright screen appears. After making the selection proceed through the remainder of the 'OPTIONS' sub-menu as required.

View Last Results
Individual test breakdown voltages can be reviewed after the completion of a test sequence. By selecting this option the last test sequence performed can be recovered and viewed even after the instrument has timed-out on its Auto Shut-off facility.

Pass/Fail Setup
A customer desired pass limit for the automatic tests is programmed in when this function is enabled. Alternatively when it is disabled the usual average and standard deviation is displayed at the end of a test sequence. The centre key selects the setup screen whose up/down keys decide the numerical kV pass limit. Having set the limit return to the main menu or other Options choice desired.

Error monitoring
The microprocessor software contains routines which monitor the operation of the oil test set. In the unlikely event of a problem occurring, whether caused by the test set or an external event, the test currently in progress will continue from the point at which the problem occurred. If this is not possible the test set will be placed in a safe condition and the operator will be advised of the situation by a message on the display. The first step to clear an error is to switch off at the rear switch then on again as this is the main system reset function. Switch on at the front and select the test again. If the error message persists seek advice from the manufacturer or his agent – see page 21.

Automatic Testing Sequences
Details of the operation of the pre-programmed oil testing specifications are given below. Choose the appropriate one from the main menu by scrolling through using the '▲', '▼' keys until the required specification is highlighted and then press 'SELECT'.

When a test specification has been selected in this way the display screen changes to show the name of the test (this remains in view throughout the test sequence) and gives an option to 'START' the test sequence with the left hand key or return to the main menu with the right hand key. A sub-display area appears at the top of the screen in which is the message 'FIT VESSEL' flashes; this is a reminder to the operator of the importance of fitting the vessel. The display also shows the type of electrodes and appropriate gap called up by the selected specification. When started the test sequence is carried out completely automatically.

Calculations
After an automatic test sequence is completed, the average is calculated from the following formula:

Average

$$\bar{x} = \frac{1}{n} \sum x_i \text{ where}$$

- x = mean (average) of results
- x_i = i^{th} individual results
- n = number of results

Operation

Standard Deviation
The sample standard deviation **s** (also known as σ_{n-1}) is given by:-

$$s = \sqrt{\frac{\Sigma x_i^2 - n x^2}{n - 1}}$$

Where **s** = sample standard deviation.

Data Dispersion
The ratio of standard deviation upon mean (**s / x**) also known as the co-efficient of variation is used to determine whether the spread of a set of test results is within acceptable limits. This value may be expressed as a percentage.

5 minute test
Note:– This is a non-standard test, designed to provide a rapid assessment of the oil condition.

1. On pressing the 'START' key the display screen appears similar to that shown in figure 5.

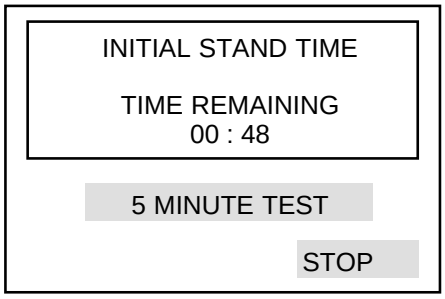

Figure 5 Example Initial stand time screen

The sub-display area informs the operator that the initial oil sample stand time is being undertaken and the time remaining is given (time is counted down to zero). In this case a 1 minute initial stand time is used.

2. After the initial stand time is complete the high voltage test is switched on and applied to the oil sample. The screen display showing 'TEST 1' appears, similar to that shown in figure 6.

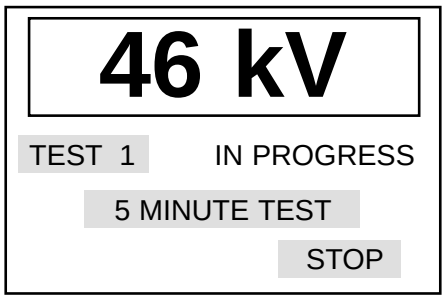

Figure 6 Example Voltage Screen

The sub-display shows the voltage applied to the sample oil; this voltage is rising at the rate of 2 kV/s. It continues until breakdown occurs (or up to maximum). The high voltage warning light is illuminated during this time. The number of the test in the sequence is shown and the words 'IN PROGRESS' appear.

3. When breakdown occurs (or if the maximum voltage is reached) the test voltage is cut off, the 'kV' warning light goes out and the test set begins its oil sample stirring period. The stirrer rotates for a period of 30 s and the breakdown voltage value of the previous test is retained on the display. The display screen appears as in figure 7.

Operation

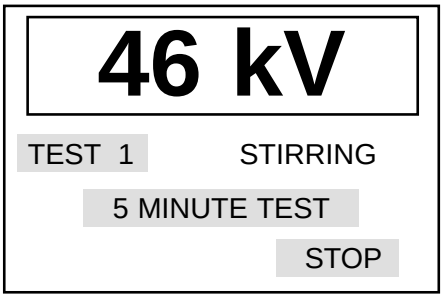

Figure 7 Example Stirring Screen

The time remaining for stirring is shown alternately with the words ‘STIRRING’.

4. When stirring has finished the test set begins its oil sample intermediate standing period which lasts for 30 s. Again the time remaining for standing is shown alternately with the words ‘STANDING’ and the breakdown voltage is still retained on the display. The display screen appears as in figure 8.

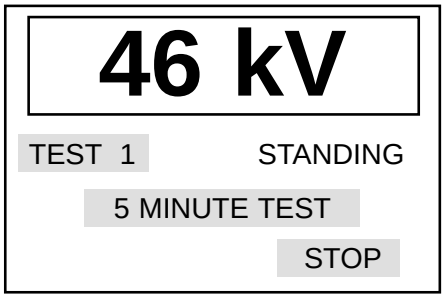

Figure 8 Example Intermediate stand time screen

5. When step (4) is finished the test voltage then begins to rise again as in step (2) above, this time for ‘TEST 2’, and the cycle of events repeats.

6. Steps (3), (4) and (5) are repeated so that the test voltage is applied for a third time. After the test voltage has been cut off on the third test, the display screen shows the average breakdown voltage value from the three tests in the sequence. The display screen appears as in figure 9, or figure 10 if the PASS/FAIL option has been enabled.

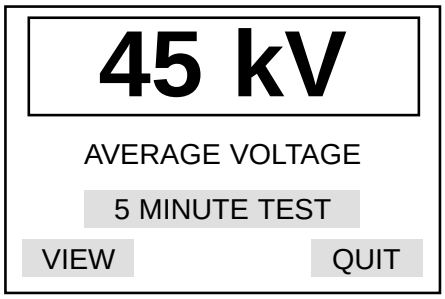

Figure 9 Example Average breakdown voltage screen

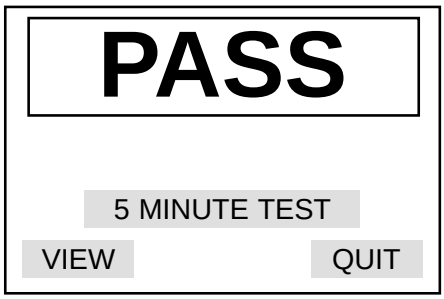

Figure 10 Example Pass screen

Operation

The three soft keys now assume different functions. Press the left hand key labelled ‘VIEW’ to bring back into view, sequentially, the breakdown voltage values of each individual test and the average value.

Press the ‘NEW’ key to return to the start of the ‘5 MINUTE TEST’ followed by the left hand ‘START’ key to repeat a test sequence or the ‘MENU’ key to return to the main menu.

Note:– At any time during a test sequence the right hand control key, labelled ‘STOP’, can be used to end a test and return to the first screen (see figure 4) display for the test option chosen.

AS 1767, BS 148, BS 5874, CEI 10-1, ΓOCT 6581, IEC 156, IP 295, NFC 27-221, SABS 555, UNE 21 and VDE 0370 tests

1. On pressing the ‘START’ key ‘TEST 1’ is initiated. The display screen appears similar to that shown in figure 5.

   The sub-display area indicates that a 3 minute initial oil sample stand time is being undertaken and the time is being counted down to zero.

2. After the initial stand time is complete the high voltage is switched on and slowly applied to the oil sample. The screen display appears similar to that shown in figure 6.

   The sub-display shows the voltage applied to the oil sample; this voltage is rising at the rate of 2 kV/s. It continues until breakdown occurs (or up to maximum). The high voltage warning light is illuminated during this time. The number of the test in the sequence is shown and the words ‘IN PROGRESS’ appear.

3. When breakdown occurs (or if the maximum voltage is reached) the test voltage is cut off, the ‘kV’ warning light goes out and the test set begins its oil sample stirring period. The stirrer rotates for a period of 1 minute and the previous breakdown voltage is retained on the display. The display screen appears similar to that in figure 7.

   The time remaining for stirring is shown alternately with the words ‘STIRRING’.

4. When stirring has finished the test set begins its oil sample intermediate standing period which lasts for 1 minute. Again the time remaining for standing is shown alternately with the words ‘STANDING’ and the previous breakdown voltage is still retained on the display. The display screen appears similar to that in figure 8.

5. The test voltage then begins to rise again as in step (2) above, this time for ‘TEST 2’, and the cycle of events repeats.

6. For these specifications there are 6 consecutive tests. After the test voltage has been cut off on the last test, the display screen shows the average breakdown voltage value from the 6 tests in the sequence. The display screen appears similar to that in figure 9 or figure 10 if the PASS/FAIL option is enabled. The BS 148 test includes the recommended pass limit and shows pass or fail as well as the actual average breakdown voltage.
   The three soft keys now assume different functions. Press the left hand key labelled ‘VIEW’ to bring back into view, sequentially, the breakdown voltage values of each individual test and the average value in turn.

Note:– UNE 21 test differs from the above as follows:– Initial stand time is 10 minutes, stir time 1 minute, intermediate stand time 4 minutes and the result is presented as the mean and standard deviation from the last 5 out of 6 tests.

Note:– NFC 27-221 test differs from the above in that the result is the mean of the last 5 our of 6 tests.

Note:– At any time during a test sequence the right hand control key, labelled ‘STOP’, can be used to end a test and return to the initial test screen.

Press the ‘NEW’ key to return to the start of the selected test sequence. Press the left hand ‘START’ key to repeat a test sequence or the ‘MENU’ key to return to the main menu.

Operation

ASTM D877 tests

1. On pressing the ‘START’ key ‘TEST 1’ is initiated and the display screen appears similar to that shown in figure 5.

   The sub-display area indicates that the initial stand time of 2 min 20 s for the oil sample is being undertaken and the time is being counted down to zero.

2. After the initial stand time is complete the high voltage is switched on and applied to the oil sample. The screen display appears similar to that shown in figure 6.
   The sub-display shows the voltage applied to the oil sample; this voltage is rising at the rate of 3 kV/s. It continues until breakdown occurs (or up to maximum). The high voltage warning light is illuminated during this time. The number of the test in the sequence is shown and the words ‘IN PROGRESS’ appear.

3. When breakdown occurs (or if the maximum voltage is reached) the test voltage is cut off, the ‘kV’ warning light goes out and the test set begins its oil sample intermediate stand period of 1 minute. There is no stirring period. The display screen appears similar to that in figure 8.

4. When the intermediate stand time has finished the test voltage begins to rise again as in step (2) above, this time for ‘TEST 2’, and the cycle of events repeats.

5. For this specification there are 5 consecutive tests. After the test voltage has been cut off on the last test, the display screen shows the average breakdown voltage value from the 5 tests in the sequence. The display screen appears similar to that in figure 9 or figure 10 if the PASS/FAIL option is enabled.

   The three control keys now assume different functions. Press the left hand key labelled ‘VIEW’ to bring back into view, sequentially, the breakdown voltage values of each individual test and the average value in turn.

   Press the ‘NEW’ key to return to the start of the selected test sequence. Press the left hand ‘START’ key to repeat a test sequence or the ‘MENU’ key to return to the main menu.

Note:– At any time during a test sequence the right hand control key, labelled ‘STOP’, can be used to end a test and return to the initial test screen.

ASTM D1816 tests

1. On pressing the ‘START’ key ‘TEST 1’ is initiated and the display screen appears similar to that shown in figure 5. The stirrer operates and continues to do so throughout the test sequence. The sub-display area indicates that the initial stand time of 3 minutes for the oil sample is being undertaken and the time is being counted down to zero.

2. After the initial stand time is complete the high voltage is switched on and applied to the oil sample. The screen display appears similar to that shown in figure 6.
   The sub-display shows the voltage applied to the sample oil; this voltage is rising at the rate of 0,5 kV/s. it continues until breakdown occurs (or up to maximum). The high voltage warning light is illuminated during this time. The number of the test in the sequence is shown and the words ‘IN PROGRESS’ appear.

3. When breakdown occurs (or if the maximum voltage is reached) the test voltage is cut off, the ‘kV’ warning light goes out and the test set begins its oil sample intermediate stand period of 1 minute. The display screen appears similar to that in figure 8.

4. When the intermediate stand time has finished the test voltage begins to rise again as in step (2) above, this time for ‘TEST 2’, and the cycle of events repeats.

5. For this specification there are 5 consecutive tests. After the test voltage has been cut off on the last test, the display screen shows the average breakdown voltage value from the 5 tests in the sequence. The display screen appears similar to that in figure 9 or figure 10 if the PASS/FAIL option is enabled.

Operation

The three soft keys now assume different functions. If desired press the left hand key labelled ‘VIEW’ to bring back into view, sequentially, the breakdown voltage values of each individual test and the average value in turn.

Press the ‘NEW’ key to return to the start of the selected test sequence. Press the left hand ‘START’ key to repeat a test sequence or the ‘MENU’ key to return to the main menu.

Note:– At any time during a test sequence the right hand control key, labelled ‘STOP’, can be used to end a test and return to the initial test screen.

Withstand (Proof) Tests

There are four types of withstand (proof) test available, BS 5730a, BS 5730a LEPLC and Withstand (Proof) Tests A and B. They enable the oil sample to be subjected to a known withstand voltage for one minute, to see if breakdown occurs. Withstand Test A causes the voltage to rise to a set value, remain there for one minute and then be removed (if breakdown does not occur beforehand). Withstand Test B causes the voltage to rise to a set value, remain for one minute and then be further increased to maximum or the breakdown point whichever occurs sooner.

Automatic proof testing according to specification BS 5730a

The actual number of tests performed is dependent on individual test results with the maximum number being three. Proof voltage limits are prescribed within the specification and are dependent on the installation category of the equipment from which the oil sample was removed and also the electrode spacing within the oil test set. The basic sequence of events for this test are; the test voltage is ramped up to the internally selected upper voltage limit and held at this limit for a period of one minute. After this period the test voltage is removed and the test considered a pass. Should a breakdown occur at any point during the test, two further tests must be performed with stand and stir times between. Both tests must be successful for the sample to be passed. A failure of the second test will terminate the sequence, as a pass is no longer possible.

BS 5730a (Automatic Withstand (Proof) Testing)

1. From the main menu select ‘BS 5730a’ option. The screen then prompts for the ‘EQUIPMENT CATEGORY’. Reference should be made to BS 5730a specification for further information. Category selection is made using the control keys. A, D selected using left key and B, C, E, F using the centre key. Use of the right hand key reverts the user to the main menu.

2. Pressing the left hand key labelled A, D generates the screen shown in figure 11. Use the left and centre control keys to select the programme for the desired electrode gap. This gap should have been previously set according to the BS 5730a test required.

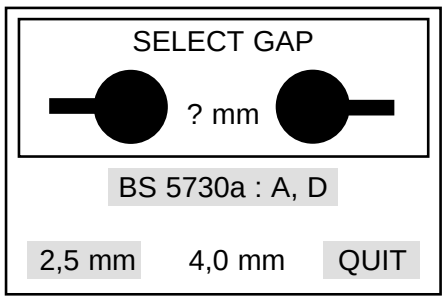

Figure 11 Example of electrode gap selection screen

3. Assuming the 2,5 mm key was operated, the display will now change to that shown in figure 124. The correct proof voltage and the electrode gap information will be displayed, in this example Withstand voltage = 30 kV with a 2,5 mm gap. To start the test operate the left key. Use of the right hand key reverts the user to the main menu.

Operation

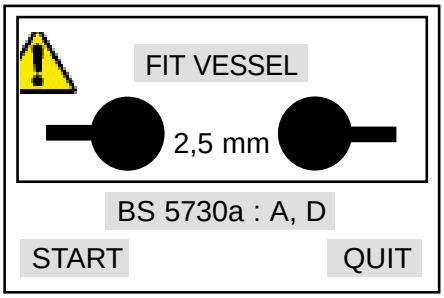

Figure 12 Example of display for starting Bs 5730a Proof Test

4. The display will now assume the standard format as shown in figure 6. Use of the right hand key reverts the user to the main menu. Upon attaining the upper voltage limit the display will indicate the elapsed time of voltage application until one minute has elapsed or breakdown has occurred.

5. The sequence of events is now dependent on the result of the first test. If the test was successful no further testing takes place. The display figure 13a is presented.

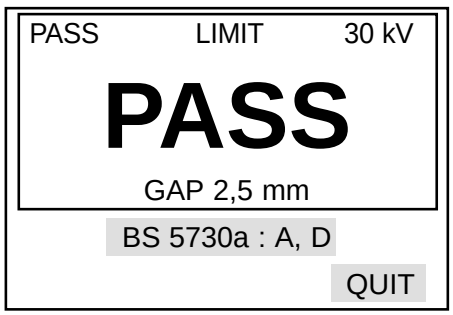

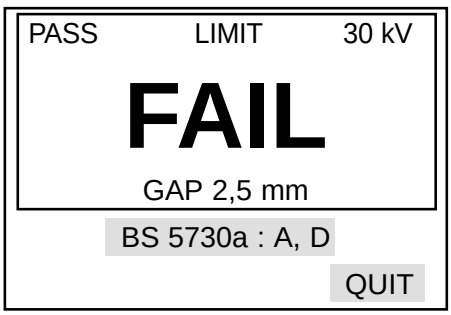

Figure 13 a Examples of BS 5730a Result Screen Figure 13b

6. If the test was unsuccessful according to BS 5730a, two further consecutive successful tests must be performed. Prior to voltage application a one minute stir followed by a one minute stand period is performed. Display information is based on figures 7 and 8 respectively.

7. A second application of the proof voltage will occur next with the sequence repeating 4 above. The display will indicate the actual test number in progress.

8. The sequence of events is now dependent on the result of the second test. If the test was unsuccessful no further testing takes place. The display figure 13b is presented.
9. If the test was successful a third test must be performed. Prior to voltage application a one minute stir followed by a one minute stand period are performed. Display information is based on figures 7 and 8 respectively.

10. A third application of the proof voltage will occur next with the sequence repeating 4 above. The display will indicate the actual test number in progress.

11. If the test was successful the display of figure 13a is presented, alternatively figure 13b will be displayed if the third test is unsuccessful.

12. At completion of the test (1, 2 or 3 tests may have been performed), the respective PASS/FAIL screen figure 13 a/b will be presented. Operation of the right control key labelled ‘QUIT’ returns the operator to the main menu.

Operation

BS 5730a LEPLC
Follows the same procedure as for BS 5730a test, but note that this test provides an initial stir for 1 minute followed by a stand of 1 minute.

The test continues to Breakdown after the test is passed.

Withstand (Proof) Test A

1. From the main menu select the 'WITHSTAND' option. On the display screen the three soft keys then become labelled 'A', 'B' and 'MENU'. (Pressing 'MENU' returns to the main menu options screen).

2. Press the left hand key labelled 'A'. The display screen appears as in figure 14.

   Use the '▼', '▲' keys to decrease or increase the proof test voltage to obtain the desired acceptance level.

   Note:– Repeated individual presses of a key changes the value in 1 kV steps. Pressing and holding a key changes the value in 1 kV steps to the next 5 kV value and thereafter in 5 kV steps.

3. Press 'SELECT' to move to the test option screen display as shown in the example of figure 15. The 'QUIT' option moves back to the choice of proof test screen display.

4. Press and hold the 'STIR' key to stir the oil sample if necessary.

5. Press the 'START' key to begin a test. The test voltage will increase at 2 kV/s to the level set and remain there for 1 minute (unless breakdown occurs first). The display shows the time for which the voltage is applied.

6. The test voltage is automatically removed after 1 minute and the result of the test is given.

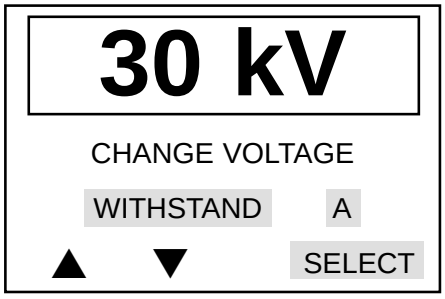

Figure 14 Example of display for setting the proof test voltage level

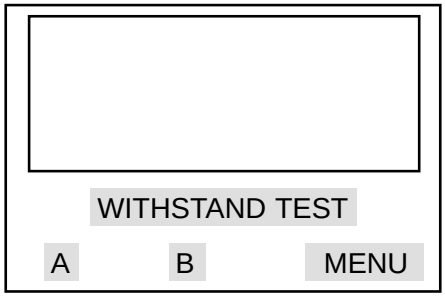

Figure 15 Example of options in the proof test

7. Press 'NEW' to go back to the test option screen ready for a repeat test. From this option press 'QUIT' and then 'MENU' to return to the main menu.

Withstand (Proof) Test B
Follow the procedure for WITHSTAND (PROOF) test A above but note that after the test voltage has been maintained for 1 minute it will continue to rise at 2 kV/s to the breakdown point (or to the maximum value) before it is automatically removed.

Operation

SELF CHECK Tests: checks the major safety and functional parts
The 'SELF CHECK' option enables the following parts of the circuit to be checked:–

EEPROM
Key Pad
Display Contrast
Door Test
Stir Test
Test Voltage
Watchdog

Note:– It is not necessary to have the oil test vessel filled with sample oil for the 'SELF CHECK' tests.

1. From the main menu select the 'SELF CHECK' option. The first display screen to appear gives a warning that an EEPROM test will clear the user memory. The arrow keys take the labels 'YES', 'NO' and 'QUIT'. (Pressing the latter key returns to the main menu.)

   Caution:– If the 'YES' button is pressed the EEPROM memory will be cleared and this will include the parameters set up by the user as well as any results data. If this information is wanted then the 'YES' button **must not** be pressed.

2. Pressing the 'NO' key avoids the EEPROM test and moves straight to the Key pad test. Each key, when pressed, causes its number to appear on the display thereby showing that it is active.
3. Press the left hand key and then the right hand key to move to the Display Contrast test. A test pattern appears on the display and then the left hand and centre keys can be used to darken or lighten the display contrast. Press select to set the Contrast level.

4. The Door Test comes next. Open the door half way down and note that the HV Safety Interlock door test has PASSED (failure to work properly would lock out the Self Test sequence at the Door Test stage). Leave the door open and press Next.

5. The Stir Test comes next. Press Start and look up inside the test chamber to see that the stirrer is rotating. The high voltage safety interlock is operational during these tests with the door open. Press Stop and observe the stirrer stops rotating. Close the door.

6. The Test Voltage check comes next. Press Start and the displayed voltage will ramp up to breakdown or the maximum of 60 kV if good oil is in the vessel. Alternatively the electrodes and their spindles may be removed or pushed back to the maximum air gap possible when a breakdown value between 30 – 40 kV is expected. The kV lamp should be illuminated up to breakdown. Press Next.

7. The Watchdog timer test comes next. This monitors the system continually and resets the equipment in the event of a failure. Check for the information Watchdog Pass which occurs for about 3 seconds.

Note:– A flashing battery symbol will appear on the display when the internal rechargeable battery is almost exhausted. The battery must be re-charged. If this is not done and testing continues a battery symbol with a cross through it appears.

Fuse Replacement
Two fuses are fitted in holders mounted on the pocket at the rear of the instrument. Ensure that the test set is disconnected from the charger or vehicle lead set before fuses are replaced. To replace a fuse unscrew and remove the cap in the centre of the holder. Remove the fuse, replace with a new one and refit the cap.

It is important that fuses of the correct rating and type are fitted (see the Specification for the details). FS1 is the external input fuse rated at 6,3 A HBC, type F, to IEC 127/1. FS2 is the internal battery fuse rated 6,3 A HBC, type F, to IEC 127/1.

Operation

Printing
The following notes describe the **OTS60PB** software routines for use with an external printer. It will also assist when setting up the printer. Refer also to the instruction leaflet provided with the printer.

Charging the Printer
The printer requires a 9 – 12 V d.c. supply to charge its internal Nicad battery. A charger is supplied in the printer kit, which operates from a mains supply of 115 – 230 (85 – 265)V a.c. (50/ 60Hz). For safety, the power supply must be earthed, therefore only use a power socket with a protective earth.

As supplied, the printer batteries may be discharged. A full charge takes approximately 14 hours, however the printer is usable after 20 minutes of charging.

Configuring the Printer
As supplied, the printer will normally have the following default settings:

Data bits:	8
Parity:	None
Baud-rate:	9600
Country:	U.K.
Print mode:	Text
Auto-off:	5 Min.
Emulation:	Standard
DTR:	Normal

The above default settings are suitable for the **OTS60PB**, with the exception of the baud rate, which should be set to 1200. This can be achieved as follows.

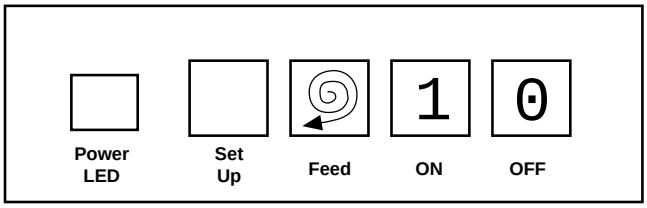

Hold down the **SET UP** button and briefly press the **ON** button. The printer will enter its program mode and print a list of its current settings. Pressing the paper **FEED** button will advance through the list of parameters and pressing the **SET UP** button will change the individual parameter through the allowed range of values.

If no buttons have been pressed for 15 seconds, program mode is ended and any changes will be lost. To end programme mode and save the settings, press **SET UP** and **FEED** simultaneously.

The Auto off setting may be changed. The optional values are 1 minute, 5 minutes or disabled. Be aware that this has a direct effect on usable battery life.

Connecting to the OTS60PB
The **OTS60PB** includes a special lead to connect to the printer to the **OTS60PB**. This uses the 4-pin socket on the rear of the oil test set.

Configuring the Oil Test Set
The **OTS60PB** needs very little configuration for printing, since the RS232 parameters are preset to the following values:-

Data bits:	8
Parity:	None
Baud-rate:	1200

Operation

A **PRINTER CONTROL** entry is on the **OPTIONS** sub menu. Selecting **PRINTER CONTROL** causes a further sub menu to appear, with the following headings:-

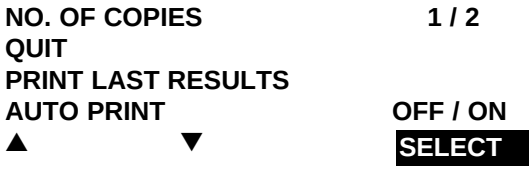

NO. OF COPIES causes the printer to produce either 1 or 2 copies of the printout. Successive presses of the **SELECT** softkey cause the value to toggle between 1 and 2.

QUIT returns to the **OPTIONS** sub menu.

PRINT LAST RESULTS produces a printout of the results of the last test carried out. In most cases, a **PRINT** softkey appears on the display at the end of each test and is a more convenient way of obtaining printouts. The **PRINT LAST RESULTS** option is useful if the chamber door has been opened or the instrument shut off after a test.

The last set of results is stored in the oil test set and is retrievable for viewing or printing until another test has been initiated.

AUTO PRINT when set to on causes printing to start automatically after completion of a test. Successive presses of the **SELECT** softkey cause the value to toggle between **ON** and **OFF**.

Sampling and Testing Oil for Dielectric Strength

The following notes are mainly intended for the guidance of those whose experience in the subject may be limited. The notes should be read in conjunction with the relevant oil testing specifications.

Causes of Bad Oil
Transformers and switchgear oil may be rendered unsuitable for further use due to four main reasons:-

1. Low dielectric strength.
2. High acidity.
3. High sludge content.
4. Excessive free water content.

Low dielectric strength may result from many causes, the most common of which is foreign particles or fibres and water in combination. Individually their effect may be relatively small, but together, a contamination of only a few parts in a million can cause considerable lowering of the breakdown voltage of the oil. High acidity, sludge and free water should not be tolerated, but will not necessarily reduce the dielectric strength below acceptable or specified levels.

Appearance of the Sample
Only an experienced person can judge the condition of an insulating oil from its appearance, but a general guide may be obtained from the following observations:-

1. A cloudy appearance may indicate that sludge has been formed.
2. A dark yellow colour could be a sign of overheating.
3. A blackish colour often results from an arc having taken place with either carbonisation of the oil or of the insulation within the equipment.
4. A green colour may be due to copper salts dissolving in the oil.

Cleanliness of the Apparatus
The necessity for scrupulous cleanliness in the apparatus and during the process of sampling, cannot be over emphasised. The measurement of the dielectric strength of the sample is as dependent on the cleanliness of the test cell and the sampling apparatus as the condition of the oil itself.

After cleaning the apparatus, it should under no circumstances be wiped, dried or even handled with a dusty or fibrous cloth as loose dust or fibres are liable to cause contamination.

Precautions Necessary During Sampling
Since the oil taken from a drain cock will inevitably contain an excess of settled out solid impurities, and will not necessarily be representative of the bulk of the oil, it should be run to waste until clear.

Always run off a quantity of oil into a glass bottle or a test tube for an initial check on the appearance of the oil. Attention to this point may prevent contamination of a clean test vessel.

If necessary, thoroughly clean and dry the sample point using a suitable solvent. Any cloth used should be lint free. Open the sample cock and drain to waste enough oil to ensure that the sample cock is fully flushed and the sample is representative of the bulk of oil to be tested. This quantity will depend upon the size of the transformer or main container. About 2 litres is usually suitable.

When sampling from a drum or supply container, the oil should flow at a steady rate into the test vessel and after being swilled around the sides it should be discarded. Without altering the rate of flow of the oil the quantity required for the test should then be run off while taking extreme care to prevent the ingress of atmospheric dust, cloth fibres or moisture. Do not use a syphon. In the absence of a usable sample point, use a ‘thief’.

Shield the sample from direct light until ready to be tested.

Turbulence and air bubbles should be avoided when pouring the oil. Relevant national specifications should be observed.

Particular care to prevent contamination is necessary when a test is to be made on a bulk delivery tanker, and on all occasions when a high value of dielectric strength is anticipated. The procedure suggested above should be rigorously applied. The oil test sets contain static sensitive devices, and care must be taken in handling the printed circuit boards. If the protection of a test set has been impaired, it should not be used but sent for repair by suitably trained and qualified personnel. The protection is likely to be impaired if for example; it shows visible damage; fails to perform its intended tests; has been subjected to prolonged storage under unfavourable conditions, or has been subjected to severe transport stresses.

Repair and Warranty

The Test set circuit contains static sensitive devices, and care must be taken in handling the printed circuit board. If the protection of a product has been impaired it should not be used, and be sent for repair by suitably trained and qualified personnel. The protection is likely to be impaired if, for example, the product shows visible damage, fails to perform the intended measurements, has been subjected to prolonged storage under unfavourable conditions, or has been exposed to severe transport stresses.

New Products are Guaranteed for 1 Year from the Date of Purchase by the User.
Note: Any unauthorized prior repair or adjustment will automatically invalidate the Warranty.

Instrument Repair and Spare Parts
For service requirements contact:–

AVO INTERNATIONAL
Archcliffe Road
Dover
Kent, CT17 9EN
England

Tel: +44 (0) 1304 502243
Fax: +44 (0) 1304 207342

or

AVO INTERNATIONAL
Valley Forge Corporate Center
2621 Van Buren Avenue
Norristown, PA 194
U.S.A.

Tel: +1 (610) 676-8579
Fax: +1 (610) 676-8625

or an approved repair company.

Approved Repair Companies
A number of independent companies have been approved for repair work on most ***MEGGER*® FOSTER®** products, using genuine ***MEGGER*® FOSTER®** spare parts. Consult the Appointed Distributor / Agent regarding spare parts, repair facilities and advice on the best course of action to take.

Returning a Test Set for Repair
If returning a test set to the manufacturer for repair, it should be sent freight pre-paid to the appropriate address. A copy of the Invoice and of the packing note should be sent simultaneously by airmail to expedite clearance through Customs. A repair estimate showing freight return and other charges will be submitted to the sender, if required, before work on the instrument commences.

Utilisation

Avertissements

1. S'assurer que le chargeur de batterie est correctement raccordé à la terre avant toute utilisation. Le chargeur de batterie doit impérativement être raccordé à une prise d'alimentation secteur munie d'une borne de terre.

2. Le chargeur de batterie doit être utilisé uniquement avec la prise de courant fournie et l'alimentation doit être protégée par fusibles ou disjoncteur. La protection ne doit pas dépassée 5 Ampères. Le chargeur ne doit pas être utilisé lorsqu'il a été endommagé, immergé ou sous la pluie.

3. L'**OTS60PB** doit être utilisé uniquement pour effectuer des essais diélectriques d'huiles. Touts autres produits inflammables tels le pétrole, ne doivent pas être testés.

4. S'assurer que la chambre d'essai ainsi que la porte sont toujours absolument propres, tout particulièrement avant un essai. Essuyer tout trace d'huile dans la chambre d'essai ou dans le récipient d'essai lorsque cela est nécessaire.

5. S'assurer que les électrodes et leurs entourages sont absolument propres avant un essai. S'assurer que les électrodes ne sont pas piquées.

6. L'appareil d'essai est livré avec des fusibles céramique à haut pouvoir de coupure type IEC 127/1. Lors du remplacement d'un fusible, celui-ci doit avoir les mêmes caractéristiques (pour plus de détails, voir la section spécification). Les fusibles en verre **ne doit pas etre utilises** à cause de leur capacité de coupure trop lente.

7. Seuls des récipients d'huiles correctes doivent être utilisés. Ceux-ci sont fournis par **AVO INTERNATIONAL** et le numéro de référence est donné dans la section accessoires. Un récipient 0 0 9999d'huile doit toujours être présent lors de l'utilisation de l'appareil.

8. Lors du réglage de l'écartement des électrodes, toujours couper l'alimentation de l'appareil en utilisant l'interrupteur se trouvant à l'arrière.

9. Les façades de l'appareil ou les autres parties ne doivent pas être enlevées. En agissant ainsi, on expose des parties de circuit sous tension. Réglages et réparations doivent être effectués uniquement par un technicien qualifié en appareils de mesure qui connait les dangers des appareils haute tension et prend les précautions nécessaires.

   Les capacités se trouvant à l'extérieur de l'appareil peuvent se trouver encore chargées même si le dispositif a été déconnecté de l'alimentation, particulièrement quand l'appareil est en panne. Tout démontage de l'appareil qui n'est pas effectué par le fabricant ou par l'un de ses agents invalide la garantie.

10. Lorsqu'il est constaté que l'appareil présente un défaut, il ne faut pas l'utiliser mais le mettre hors service et le retourner au fabricant ou un de ses agents agréés pour réparation.

    On peut considérer que l'appareil n'est pas en état de fonctionner lorsque, par exemple, il présente des signes visibles de dégâts, par exemple sur la protection des touches tactiles ou sur l'aspect général, s'il ne fait pas les mesures attendues, s'il a été stocké de façon prolongée dans de mauvaises conditions ou s'il a été soumis à des conditions de transport sévères.

11. Si l'appareil d'essai d'huile est soumis à des variatios importantes d'humidité ou de température, il faut attendre au moins 2 heures avant de l'utiliser pour qu'il "s'aclimate" à ces nouvelles conditions.

12. Il n'est pas conseillé de transporter l'appareil d'essai avec une cuve pleine dans la chambre d'essai.

Precautions

La batterie interne doit être rechargée au moins tous les 6 mois pour prolonger sa durée de vie. Le circuit d'essai contient des systèmes sensibles à l'électricité statique. Si le boitier ouvert pour quelque raison que ce soit (ce qui annule la garantie à moins que cela ne soit fait pas le fabricant ou l'un de ses agents agrées), toutes les précautions doivent être prises dans la manipulation des circuits imprimés. Cela doit être fait conformément aux spécifications DEF STAN 59-98 et BS 5783 sur la manipulation des sensibles l'électricité statique.

Utilisation

Preparation de la cuve d'essai et des electrodes

1. Nettoyer la cuve d'essai d'huile minutieusement avant de verser l'échantillon d'huile. Les méthodes pour nettoyer sont décrites dans les spécifications nationales pour le contrôle des huiles. Le rinçage avec un échantillon de l'huile est normalement exigé. L'échantillon devant être versé dans la cuve en évitant la formation de bulles d'air jusqu'au repère 500ml (une couvercle doit être utilisé lorsqu'on transporte l'huile de la zone de prélèvement jusqu'à l'appareil d'essai d'huiles afin d'éviter toute contamination).

2. Nettoyer les électrodes et toutes les parties qui viennent en contact avec l'échantillon d'huile à tester. Rincer avec un échantillon de l'huile est recommandé avant le remplissage final avec l'huile à tester. Cela à l'avantage de permettre à l'huile de ne pas s'égoutter des électrodes avant d'enlever la cuve une fois la porte ouverte. Cela réduit le temps de nettoyage du plancher de la chambre d'essai.

3. Régler l'écartement entre les électrodes conformément aux recommandations de la spécification choisie. Une jague d'espacement est fournie dans le kit accessoire. Les vis en bas des supports des deux électrodes doivent être desserées et les bras glissants déplacés de façon à ce que l'ouverture soit approximativement au milieu des 2 supports. Serrer la vis sur le 1er support pour maintenir un bras fermement puis faire coulisser l'autre pour que la gauge d'espacement passe juste entre les électrodes. Serrer la 2ème vis, s'assurer que les électrodes soient serrées manuellement sur leur axe. Recontrôler l'espacement une fois le réglage effectué.

   Une liste sur la forme des électrodes et les espacement pour des spécifications d'essai communes est donnée ci-dessous. Chaque spécification nationale se trouve dans l'OTS 60PB et apparait sur l'afficheur avec le type d'électrode et l'écartement correspondant à chaque sélection.

Spécification sélectionées d'essai normalisé	EN60156 AS 1767 BS 5874 BS 5730 IEC 156 IP 295 NFC 27 SABS 555 UNE 21	CEI 10-1 ГОСТ 6581 VDE 0370 STAS 286	ASTM D1816	ASTM D877
Profil des électrodes		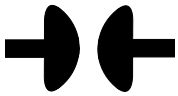	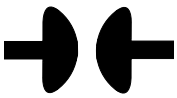	
Ecartement des électrodes	2,5 mm		2,0 mm	2,5 mm

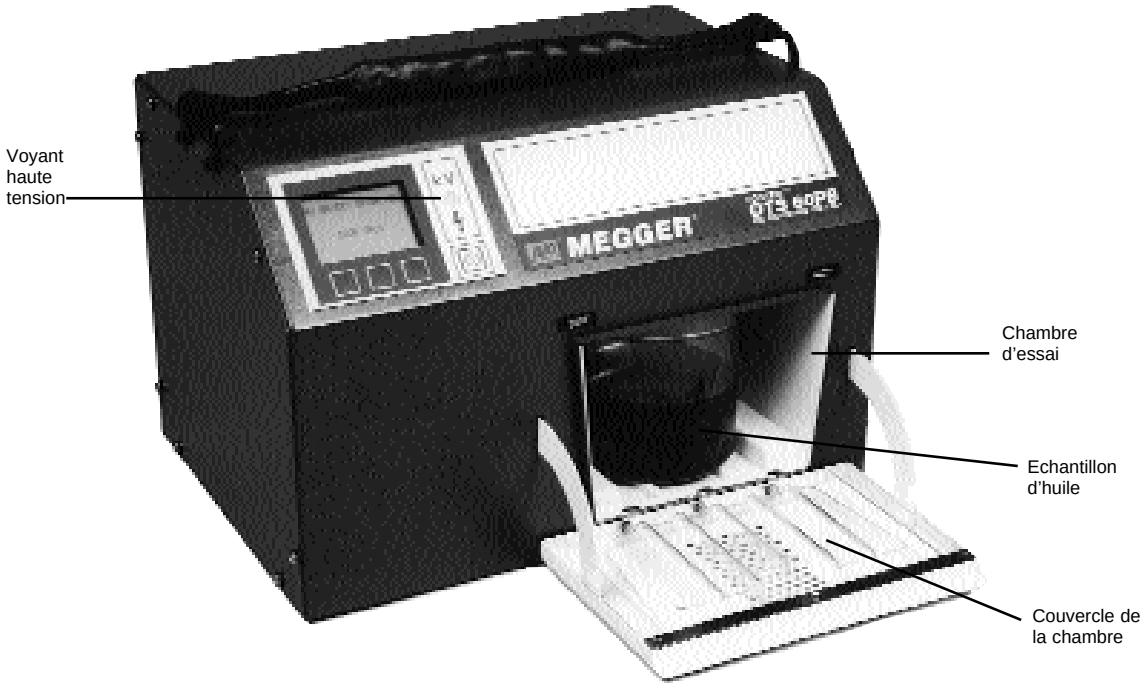

Fig. 1 Photo de l'appareil d'essai d'huile OTS 60PB

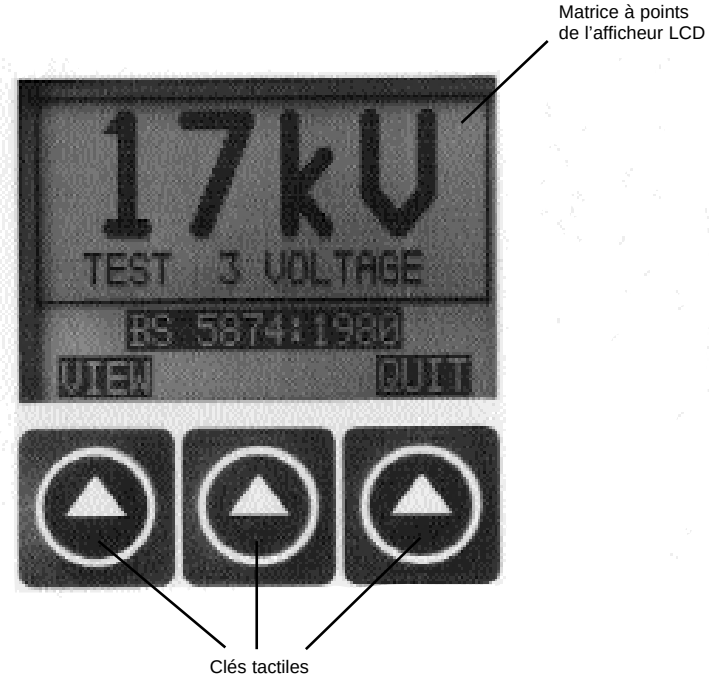

Fig. 2 Touches de contrôle du poste d'essai d'huile

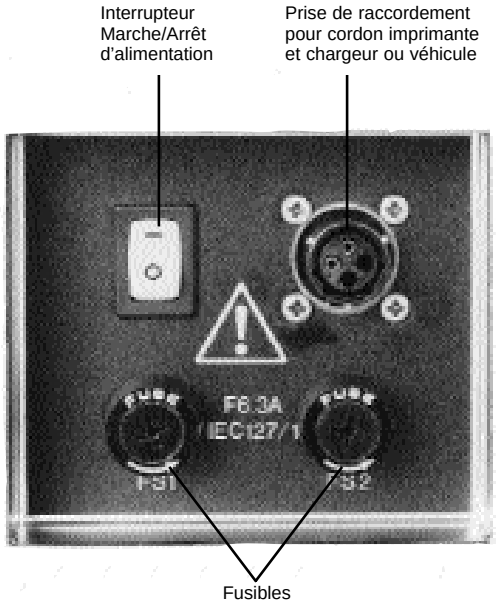

Fig. 3 Face arrière du poste d'essai d'huile

Utilisation

PREPARATION DE L'APPAREIL D'ESSAI D'HUILE

1. Exposer l'afficheur et la zone de chargement en retirant le couvercle de protection de l'appareil. Raccorder le chargeur à la prise arrière de l'appareil et le mettre sous tension à moins que l'équipement ne doivent travailler sur sa batterie interne. Alternativement, raccorder le cordon véhicle 12 V de l'appareil à la prise 12 V située à l'arrière de l'appareil à une alimentatin 12 V, négatif au châssis, prise allume cigare uniquement lorsque la batterie interne est faible et lorsqu'il n'y a pas d'alimentation secteur pour le chargement. Attendre 15 minutes pour amener les batteries internes à des conditions minimales avant de commencer un essai.

2. Mettre en marche un utilisant l'interrupteur sur la face arrière. Appuyer alors sur le bouton ON/OFF de la face avant pour commencer. L'interrupteur sur la face arrière doit être arrêté uniquement pour des périodes de stockage importantes — supérieures à 6 mois. Le copyright apparait sur l'afficheur pendant un bref instant et est suivi du menu principal. Les sélections disponibles à partir du menu principal sont:

OPTIONS	AS 1767
BS 148: 1984	ASTM D877
BS 5730a: 1979	ASTM D-1816
BS 5730a LEPLC	CEI 10-1
BS 5874: 1980	ГОСТ 6581
EN 60156	IP 295
IEC 156: 1963	NFC 27-221
TENUE	SABS 555
ESSAI 5 MINUTES	UNE 21
	VDE 0370
	AUTO CONTROLE

L'écran du menu principal attribue des fonctions aux 3 clés de contrôle au dessous de l'afficheur (de gauche à droite) '▲', '▼' et CHOIX. Les flèches de direction '▲' et '▼' permettent de se déplacer vers le haut ou vers la bas à travers le menu d'options et la clé "CHOIX" permet de sélectionner l'option en surbrillance.

NOTE: L'afficheur ne montre que 5 options du menu à un instant donné et ceux visualités dépendent de la dernière option utilisée. Lors du défilement, l'option en surbrillance est celle prête à être sélectionnée.

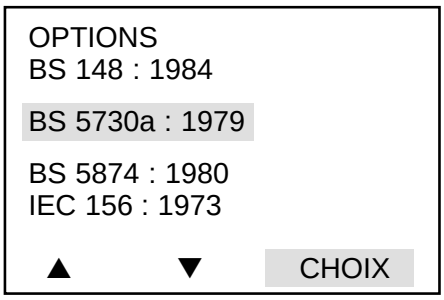

Fig. 4 Exemple du menu CHOIX

3. Sélectionner l'option désirée et procéder comme indiqué par les instructions apparaissant sur l'afficheur.

Le texte suivant explique le fonctionnement de chacune des options du menu. Toutes n'intèresseront pas l'utilisateur au moment de l'essai.

Utilisation

Options
Le sous menu “OPTIONS” propose:

— LANGUE
— VUE DERNIERS RESULT
— CONTROLE IMPRIMANTE
— CONTRASTE AFFICHAGE
— CHANGER BON/DEFAUT
— MENU

Se déplacer et sélectionner comme précédemment.

Contraste Affichage
Lorsque “CONTRASTE AFFICHAGE” est sélectionné, les clés plus foncé/plus clair doivent être utilisées pour régler la lecture sur l’afficheur. Appuyer sur “CHOIX” pour revenir au sous menu “OPTIONS”.

NOTE: Une façon plus rapide pour sélectionner le contraste de l’affichage consiste à maintenir la clé du milieu appuyée pendant que l’on appuie sur le bouton marche. La clé doit être maintenue une seconde environ après avoir relaché le bouton marche/arrêt.

Selection Language
L’afficheur ainsi que l’imprimante peuvent être réglés pour lire dans une des 6 langues suivantes:

— ANGLAIS
— FRANCAIS
— ALLEMAND
— ESPAGNOL
— PORTUGAIS
— ITALIEN

Choisir et sélectionner comme précédemment.

Appuyer sur “CHOIX” pour revenir au sous menu.

NOTE: Un moyen plus rapide pour sélectionner la langue consiste à maintenir la clé droite appuyée et relâcher la clé lorsque le copyright apparait à l’écran. Après avoir effectué la sélection, procéder comme pour le reste des options.

Vue Derniers Resultats
Chacun des résultats des essais de claquage en tension peut être visualisé après qu’une séquence d’essai soit terminée. En sélectionnant cette option, la dernière séquence d’essai peut être récupérée et visualisée même après que l’appareil ait été arrêté.

Changer Bon/Defaut
Des limites d’acceptabilité pour les essais automatiques peuvent être programmées lorsqu’on sélectionne cette fonction. Alternativement, lorsque cette fonction n’est pas sélectionnée, la moyenne est affichée à la fin de la séquence d’essai. La clé du milieu sélectionne l’écran de réglage et les clés ‘▲’ et ‘▼’ permettent d’augmenter ou de diminuer la valeur en kV définissant les limites. Une fois le réglage effectué on revient au menu principal ou aux autres choix d’option désirés.

Surveillance d’Erreur
Le soft du microprocesseur contient des routines qui dirigent le fonctionnement du poste d’essai d’huile. Dans le cas peu probable où un problème apparaitrait, soit causé par l’appareil d’essai soit par un évènement externe, l’essai en cours se poursuit à partir du point où le problème est apparu. Si ce n’est pas possible, l’appareil d’essai se place dans des conditions de sécurité et l’opérateur est avisé de la situation par un message sur l’afficheur. La première chose à faire pour remettre à zéro une erreur est d’appuyer sur le bouton arrêt situé sur la face arrière. Puis mettre à nouveau en marche l’appareil afin de faire une remise à zéro du système. Mettre alors en marche sur la face avant et sélectionner à nouveau l’essai. Si le message d’erreur persiste, prendre contact avec le fabricant ou un agent.

Utilisation

Sequences d'Essai Automatiques
Les détails sur la pré programmation des spécifications d'essai d'huiles sont donnés ci-après. Choisir la spécification désirée à partir du menu principal en le faisant défiler à l'aide des clés '▲' et '▼' jusqu'à ce que cette spécification soit en surbrillance. Appuyer alors sur "CHOIX". Lorsqu'une spécification d'essai a été sélectionnée dans ce sens, l'afficheur change pour montrer le nom de l'essai (celui-ci reste présent durant le test) et donne une option pour "commencer" la séquence d'essai à l'aide de la clé de gauche "DEPART" ou revenir au menu principal à l'aide de la clé de droite "FIN". Un message apparait dans la zone supérieure de l'écran indiquant "METTRE CUVE". Cela rappelle à l'utilisateur l'importance de placer une cuve. L'afficheur indique également le type d'électrode et l'écartement exigé par la spécification sélectionnée. Une fois la séquence d'essai commencée, celle-ci se réglise automatiquement.

Essai 5 Minutes
NOTE: Ce n'est pas un essai standard. Il est destiné à une rapide évaluation sur les conditions de l'huile.

1. En appuyant sur la clé "DEPART", l'afficheur apparait comme montré figure 5.

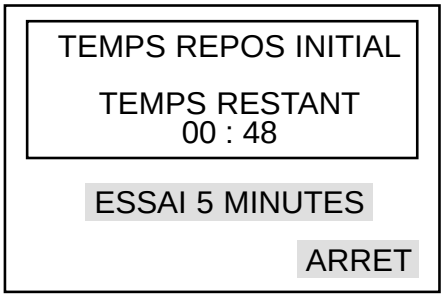

Fig. 5 Exemple d'arrichage du temps de repos initial

La zone d'affichage supérieure informe l'utilisateur que le temps de repos de l'échantillon d'huile a commencé et le temps restant est donné (le temps est décompté jusque zéro). Dans ce cas, un temps de repos initial d'une minute est utilisé.

2. Après que le temps de repos initial soit terminé, l'essai est actionné et la haute ension appliquée à l'échantillon d'huile. L'écran montrant "TEST 1" est similaire à celui représenté figure 6.

Fig. 6 Exemple d'affichage tension

La partie supérieure de l'affichage donne la tension appliquée à l'échantillon d'huile. Cette tension monte à la vitesse de 2 kV/s. Cela continue jusqu'à ce qu'un arc se produise (ou alors jusqu'au maximum). La lampe haute tensin est allumée durant ce temps. Le numéro d'essai dans la séquence est donné et le message "EN COURS" apparait.

3. Lorsqu'un claquage se produit (ou si la tension maximale est atteinte), la tension d'essai est coupée, la lampe "kV" s'éteint et la période d'agitation tourne alors pour une période de 30 secondes et la valeur de la tension de claquage est maintenue sur l'afficheur. L'écran apparait comme présenté sur la figure 7.

Utilisation

Fig. 7 Exemple de l'écran agitation

Le temps d'agitation restant est visualisé en alternance avec le message "AGITATION".

4. Lorsque le temps d'agitation est terminé, l'appareil commence alors un temps de repos pour l'échantillon en essai pour une période de 30 secondes. Encore une fois, le temps d'attente restant apparait en alternance avec le mot "REPOS", et la tension de claquage est toujours présente sur l'afficheur. L'affichage de l'écran apparait selon la figure 8.

Fig. 8 Exemple de l'écran d'attente

5. Lorsque l'étage 4 est terminée, l'essai de montée en tension commence comme décrit dans l'étage 2. Le temps de l'ESSAI 3 et le cycle sont identiques.

6. Les étapes (3), (4) et (5) se repètent, si bien que la tension d'essai est appliquée pour une 3ème fois. Après que l'essai de tension ait été appliqué pour la 3ème fois, l'affichage de l'écran donne la valeur de la tension de claquage moyenne durant les 3 séquences d'essai. L'affichage de l'écran apparait selon la figure 9 ou la figure 10 suivant que l'option BON/DEFAUT ait été sélectionnée.

Fig. 9 Exemple d'écran de tension de claquage moyenne

Utilisation

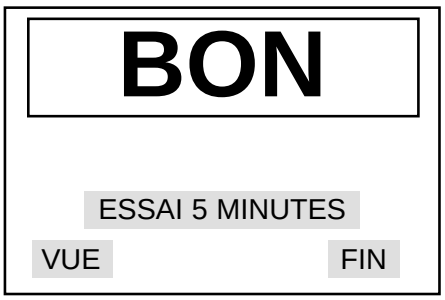

Fig. 10 Exemple d'écran bon

Les 3 clés tactiles assurent maintenant des fonctions différentes. Appuyer sur la touche pour visualiser séquentiellement les valeurs des tensions de claquage de chacun des essais individuels et la valeur moyenne. Appuyer sur la clé "NOUVEAU" pour revenir au début du menu "ESSAI 5 MINUTES" suivi de la clé de gauche "DEBUT" pour répéter la séquence d'essai ou sur la clé "MENU" pour revenir au menu principal.

NOTE: A tout moment lors d'une séquence d'essai, la clé de contrôle de droite intitulée "STOP" peut être utilisée pour stopper un essai et revenir au 1er écran (voir fig. 4) pour le choix d'option.

NFC 27-221

1. En appuyant sur la clé "DEPART" le "TEST 1" est initialisé. L'affichage de l'écran est alors similaire à celui de la figure 5.

   La zone supérieure de l'affichage indique qu'un temps de repos initial de 3 minutes est alors appliqué sur l'échantillon d'huile. Le temps est alors décompté jusque 0.

2. Une fois le temps de repos écoulé, la haute tensin apparait es est appliquée progressivement à l'échantillon d'huile. L'afficheur de l'écran est représenté figure 6.

   La partie supérieure de l'écran montre la tension appliquée à l'échantillon d'huile. La tension monte à une vitesse de 2 kV/s jusqu'au claquage (ou jusqu'au maxi). Le voyant haute tensin est allumé durant cette période. Le numéro de la séquence d'essai apparait ainsi que le message "EN MARCHE".

3. Lorsqu'un claquage se produit (ou si la tension maxi est atteinte), la tension d'essai est alors arrêtée, la lampe haute tension s'éteint. L'appareil commence alors sa période d'agitation de l'échantillon d'huile. L'agitateur tourne alors pour une période d'une minute et la tension de claquage est maintenue présente à l'écran. L'affichage de l'écran est similare à celui de la figure 7.

   Le temps d'agitation restant apparait en alternance avec le mot "AGITATION".

4. Lorsque le temps d'agitation est terminé, l'appareil commence alors un temps de repos pour l'échantillon d'huile pour une période d'une minute. A nouveau, le temps de repos restant apparait en alternance avec le mot "REPOS". La tension de claquage précédente est maintenue présente à l'écran. L'affichage de l'écran est similaire à celui de la figure 8.

5. La tension d'essai commence alors à nouveau `croitre tout comme dans l'étape (2) ci-dessus. Cette fois c'est "l'ESSAI 2'. Le cycle des évènments se repète alors.

6. Pour la spécification NFC 27-221, il y a 6 tests consécutifs. Après que la tension d'essai ait été coupée pour la dernière fois, l'afficheur de l'écran donne la valeur de la tension de claquage moyenne durant les 5 dernières séquences d'essai. L'écran est alors similaire à celui de la figure 9 ou de la figure 10 suivant l'option BON/DEFAUT précédemment sélectionnée.

   Les 3 clés assurent maintenant des fonctions différentes. Appuyer sur la touche gauche intitulée "VISU" pour revenir en arrière et visualiser, par séquence, les tensions de claquage de chacun des essais ainsi que la valeur moyenne.

Utilisation

NOTE: A tout moment durant une séquence d'essai, la touche de contrôle droite intitulée "STOP" peut être utilisée pour mettre fin à un essai et revenir à l'écran de l'essai initial.

Appuyer sur la clé "NOUVEAU" pour revenir au début de la séquence d'essai sélectionnée. Appuyer sur la touche de droite "DEBUT" pour répéter une séquence ou sur la touche "MENU" pour revenir au menu principal.

Essai de Tenue

Il y a 2 types d'essai de tenue disponibles. Ces essais premettant à l'échantillon d'huile d'être soumis à une tension durant une minute pour voir si un claquage se produit. Dans l'essai de tenue A, la tensin monte jusqu'à une valeur sélectionnée, puis est maintenue constante durant une minute et enfin cette tension est arrêtée (si aucun claquage n'apparait entre temps). Dans l'essai de tenue B, la tension monte à une valeur donnée puis elle est maintenue durant une minute puis continue à monter jusqu'au maximum à moins qu'un claquage ne se produise.

Essais de Tenue A

1. A partir du menu principal, sélectionner l'option "TENUE". Sur l'affichage les 3 clés tactiles deviennent alors "A", "B" et "MENU" (en appuyant sur "MENU" on retourne à l'affichage des options du menu principal.

2. Appuyer sur la touche de gauche intitulée "A". L'affichage apparait comme sur celui de la figure 11. Utiliser les clés '▼', '▲' pour abaisser ou augmenter la tension d'essai de tenu jusqu'à la valeur choisie.

   NOTE: En appuyant en coup par coup sur les clés, on change les valeurs par pas de 1 kV. En appuyant et en maintenant la clé on change la valeur par pas de 1 kV jusqu'à la valeur de 5 kV puis par pas de 5 kV.

3. Appuyer sur "CHOIX" pour changer l'affichage de l'option d'essai comme montré sur l'exemple de la figure 12. L'option "FIN" retourne à l'affichage du choix de l'essai de tenue.

4. Appuyer et maintenir la clé "AGITATION" pour agiter l'échantillon d'huile si nécessaire.

5. Appuyer sur la clé "DEBUT" pour commencer un essai. La tension d'essai va alors augmenter à 2 kV/s jusqu'au niveau sélectionné, puis elle est maintenue une minute (à moins qu'un claquage ne se produise). L'afficheur donne alors le temps depuis lequel la tension est appliquée.

6. La tension d'essai est automatiquement retirée après une minute. Le résultat de l'essai est alors donné. Le choix est alors proposé d'imprimer le résultat ou de faire un nouvel essai.

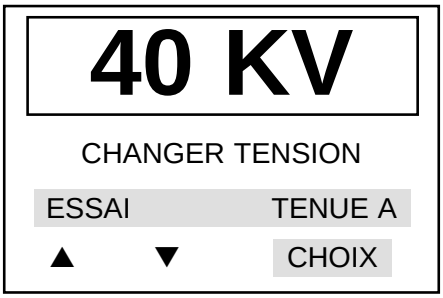

Fig. 11 Exemple d'affichage pour le réglage d'un essai de tenue en tension

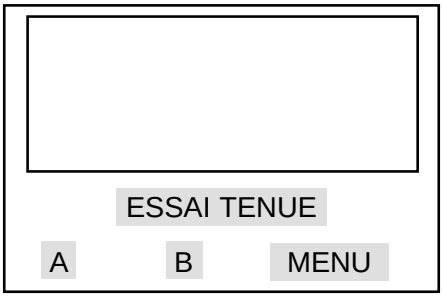

Fig. 12 Exemple des options des essais de tenue

Utilisation

7. Appuyer sur “NOUVEAU” pour revenir à l’affichage des options d’essai pour renouveler un essai. A partir de cette option, appuyer sur “QUITTER” puis sur “MENU” pour revenir au menu principal.

Essai de Tenue B
Suivre la procédure de l’essai de tenue A. Par contre, une fois la tension d’essai maintenue durant une minute, la tension continuera à croitre à raison de 2 kV/s jusqu’au point de claquage où jusqu’à la valeur maximum avant que l’essai ne soit automatiquement stoppé.

Test d’Auto Controle
Contrôle des princiaples sécurités et des parties fonctionnelles. L’option “AUTO CONTROLE” permet de vérifier les parties suivantes du circuit:

ESSAI EEPROM
ESSAI CLAVIER
ESSAI CONTRASTE DE L’AFFICHEUR
ESSAI CONTROLE DE LA PORTE
ESSAI CONTROLE DE L’AGITATEUR
ESSAI DE TENSION

NOTE: Il n’est pas nécessaire d’avoir une cuve d’essai remplie d’huile pour effectuer l’essai “AUTO CONTROLE”.

1. A partir du menu principal, sélectionner l’option “AUTO CONTROLE”. Le premier affichage apparaissant à l’écran attire l’attention sur le fait qu’un essai d’EEPROM provoque une remise à zéro des mémoires. Les clés prennent alors les étiquettes “OUI”, “NON” et “QUIT” (presser la dernière clé retourne au menu principal).

   Attention: En sélectionnant le bouton “OUI” la mémoire EEPROM sera effacée. Cela inclus les paramètres de réglage définis par l’utilisateur mais aussi le résultat des données. Si cette information est recherchée alors le bouton “OUI” NE DOIT PAS être sélectionné.

2. Si la clé “NON” est sélectionnée, le test de l’EEPROM est évité et l’on passe ainsi au contrôle des touches. Chaque clés, lorsqu’elle est sélectionnée, provoque l’apparition de son numéro sur l’afficheur prouvant ainsi qu’elle est bien active.

3. Appuyer sur la touche de gauche puis sur la touche de droite pour vérifier le contaste de l’affichage. Un essai type apparait sur l’afficheur. Les clés de gauche et du centre peuvent alors être utilisées pour augmenter ou réduire le contraste de l’afficheur. Appuyer sur “CHOIX” pour valider le niveau du contrat.

4. Vient ensuite le contrôle de la porte. Ouvrir la porte à moitié et vérifier le fonctionnement du système d’interverrouillage de la porte (un mauvais fonctionnement devrait bloquer la séquence d’auto contrôle à ce niveau). Laisser la porte ouverte et passer au contrôle suivant.

5. Vient ensuite le contrôle de l’agitateur. Appuyer sur le bouton début et observer à l’intérieur de la chambre d’essai que l’agitateur tourne correctement. La sécurité du vérrouillage de la haute tension est opérationnelle durant ces essai à porte ouverte. Appuyer sur ARRET et constater l’immobilisation de l’agitateur. Fermer la porte.

6. Vient ensuite le contrôle de l’essai de tension. Appuyer sur début. La tension doit alors monter jusqu’au claquage ou jusqu’à 60 kV si une huile correcte est présente dans la cuve d’essai.

7. Vient enfin le contrôle du système de surveillance, qui contrôle le microprocesseur en permanence. Il arrête tout l’équipement dès qu’un défaut apparait. Vérifier les informations qui apparaissent durant 3 secondes environ.

   NOTE: Un signal batterie apparait à l’écran dès que les batteries internes sont trop faibles. La batterie doit alors est rechargée. Si cela n’est pas fait alors qu’un essai est maintenu, un symbole batterie avec une croix apparaitra.

Remplacement du Fusible
Deux fusibles sont placés dans des supports sur la face arrière de l’appareil. S’assurer que l’appareil n’est pas raccordé à son chargeur ou à un cordon de véhicule avant de procéder au remplacement des fusibles. Pour remplacer un fusible, dévisser et retirer le capot de son support. Retirer le fusible et le remplacer par un nouveau. Remettre le couvercle.

Il est important de mettre des fusibles de type identique à ceux d’origine (voir la spécification pour plus de détails). FS1 est un fusible externe 6,3 A HPC type F selon IEC 127/1. FS2 est un fusible interne pour la batterie type 6,3 A HPC, type F selon IEC 127/1.

Utilisation

Impression
Les remarques suivantes décrivent les sous-programmes logiciels de l'***OTS60PB*** en vue d'une utilisation avec une imprimante extérieure. Elles vous aideront également à programmer cette imprimante. Consultez le mode d'emploi qui accompange cette dernière.

Chargement de l'imprimante
L'imprimante à besoin d'une tension de 9 à 12 V c.c. pour charger sa batterie cadmium-nickel. Un chargeur est remis avec le kit de l'imprimante. Il fonctionne à la tension secteur de 115–230 (85–265) V c.a. (50/60 Hz). Pour des raisons de sécurité, il est indispensable de mettre à la terre cette alimentation électrique. Par conséquent, il faut uniquement utiliser une prise munie d'une terre de protection.

La batterie des imprimantes, lors de sa livraison, est probablement à plat. Pour obtenir une charge complète, il faut prévoir environ 14 heures. Cependant, cette imprimante peut s'utiliser après 20 minutes de charge.

Configuration de l'imprimante
L'imprimante qui est fournie a normalement les réglages implicites suivants:

bits de données	8
parité:	Néant
taux en bauds:	9 600
pays:	R.-U.
mode d'impression:	Texte
arrêt automatique:	5 minutes
émulation:	Standard
DTR:	Normal

Les réglages implicites ci-dessus peuvent s'utiliser avec l'***OTS60PB***, à l'exception du taux en bauds qui doit être réglé sur 1 200. Pour obtenir ce réglage, procédez de la manière suivant:

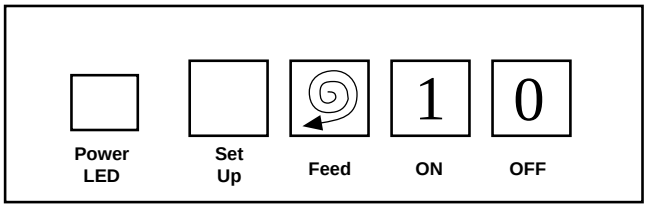

Maintenez la pression sur le bouton de programmation **SET UP** puis appuyez brièvement sur le bouton de marche **ON**. L'imprimante passe alors dans son mode de programmation et imprime la liste de ses réglages actuels. Une pression sur le bouton d'avance **FEED** permet de faire défiler cette liste. Une pression sur le bouton **SET UP** permet de modifier chaque paramètre, l'un après l'autre, à condition de respecter la plage autorisée de valeur.

S'il n'y a pas de pression sur un bouton, au bout de 15 secondes le mode de programmation est abandonné et les changements effectués ne sont pas conservés. Pour mettre fin à ce mode de programmation et conserver les réglages, appuyez simultanément sur les touches **SET UP** et **FEED**.

Il est possible de modifier la valeur du paramètre d'arrêt automatique (Auto off). Les valeurs proposées en option sont égales à 1 minute et à 5 minutes. Il est également possible de désactiver cette fonction. N'oubliez pas que ce paramètre à une effet direct sur l'autonomie opérationnelle de la batterie.

Branchement sur l'OTS60PB
L'***OTS60PB*** comporte un conducteur spécial qui permet de la raccorder à une imprimante. Utilisez pour cela la prise femmelle à 4 broches qui se trouve au dos du group d'essai d'huiles.

Configuration du group d'essai d'huiles
La configuration d'impression de l'***OTS60PB*** se fait avec un minimum d'intervention étant donné que tous les paramètres RS232 ont déjà préprogrammés et ont les valeurs suivants:

bits de données:	8
parité	néant
taux en bauds	1 200

Utilisation

La fonction de commande de l'imprimante (**CONTROLE IMPRIMANTE**) à été ajoutée au sous-menu **OPTIONS**. Lorsque cette fonction est sélectionnée, un nouveau sous-menu apparaît. Il a les en-têtes suivants:

NBRE DE COPIES	**1 / 2**
FIN	
IMPRESSION DES DERNIERS RESULT	
IMPRESSION AUTO	**NON / OUI**
▲ ▼	**CHOIX**

La fonction **NBRE DE COPIES** permet d'imprimer 1 à 2 exemplaires des résultats. Plusieurs pressions successives sur la touche logicielle **CHOIX** permettent de passer du chiffre 1 au chiffre 2 et ainsi de suite.

FIN permet de revenir au sous-menu **OPTIONS**.

IMP. DERNIERS RESULT permet d'imprimer les résultats des derniers essais réalisés. Dans la plupart des cas, une touche logicielle **IMPRESSION** apparaît à l'écran à la fin de chaque essai, ce qui constitue un méthode plus commode d'impression des résultats. Cette option **IMP. DERNIERS RESULT** est utile si la porte de la chambre a été ouverte ou si l'instrument a été arrêté après un essai.

La dernière série de résultats est mémorisée dans le groupe d'essai d'huiles et il est possible de la visualiser ou de l'imprimer avant de lancer un nouvel essai.

L'option **IMPRESSION AUTO**, à condition de choisir **OUI** permet d'obtenir une impression automatique après chaque essai. Plusieurs pressions successives sur la touche logicielle **CHOIX** permettent de passer de **OUI** à **NON**, et ainsi de suite.

Echantillonnage et essai de résistance diélectrique des huiles

Les notes suivantes sont destinées principalement aux personnes ayant des connaissances limitées du sujet. Ces notes doivent être lues conjointement aux spécifications d'essai d'huile appropriées.

Causes des mauvaises huiles
L'huile de transformateur et d'appareillage de commutation peut être devenir inutilisable à cause de quatre raisons:-

1. Faible résistance diélectrique
2. Forte acidité
3. Haute teneur en boues
4. Teneur excessive en eau libre

La faible résistance diélectrique a de nombreuses causes, la plus courante étant la présence de particules étrangères ou d'une combinaison de fibres et d'eau. Individuellement, leurs effets peuvent être relativement faibles, mais ensemble une contamination de quelques parties par million peut causer une réduction considérable de la tension de claquage de l'huile. Une forte acidité, les boues et l'eau libre ne doivent pas être tolérées, mais ne réduiront pas la résistance diélectrique en dessous des niveaux acceptables ou spécifiés.

Aspect de l'échantillon
Seule une personne compétente peut juger l'état d'une huile d'isolement à partir de son aspect, mais une indication générale peut être déduite des observations suivantes :

1. Un aspect nuageux peut indiquer la formation de boues.
2. Une couleur jaune sombre peut indiquer un échauffement excessif.
3. Une couleur noirâtre est souvent le résultat d'un arc avec soit carbonisation de l'huile ou de l'isolement à l'intérieur du matériel.
4. Une teinte verdâtre peut être causée par la dissolution de sels de cuivre dans l'huile.

Propreté des appareils
La nécessité d'une propreté scrupuleuse des appareils et pendant l'échantillonnage ne peut pas être suffisamment soulignée. La mesure de la résistance diélectrique de l'échantillon dépend tout aussi bien de la propreté de la cellule d'essai que de l'état même de l'huile.

Une fois nettoyé, l'appareil ne doit jamais être essuyé, séché ou même manipulé avec un chiffon poussiéreux ou fibreux étant donné que les poussières ou les fibres libres peuvent causer une contamination.

Précautions à prendre pendant l'échantillonnage
Etant donné que l'huile prélevée à partir d'un robinet de prélèvement contiendra inévitablement une forte teneur d'impuretés solides décantées, et ne sera pas nécessairement représentative de la masse de l'huile, il convient de laisser couler l'huile dans un bac de déchet jusqu'à ce qu'elle soit claire.

Laisser toujours couler une certaine quantité d'huile dans une bouteille en verre ou dans une éprouvette pour effectuer une inspection initiale de l'aspect de l'huile. Cette observation peut éviter la contamination d'un récipient d'essai propre.

Si nécessaire, nettoyer et sécher le point d'échantillonnage en utilisant un solvant approprié. Tout chiffon utilisé doit être du type non pelucheux. Ouvrir le robinet de prélèvement et laisser couler l'huile pour s'assurer que le robinet est totalement rincé et que l'échantillon est représentatif de la masse d'huile à tester. Cette quantité est fonction de la taille du transformateur ou du récipient principal. En règle générale, 2 litres suffisent.

Pour le prélèvement dans un fût ou dans un réservoir d'alimentation, l'huile doit couler à un débit uniforme dans le récipient d'essai, puis répandue sur les parois du récipient et jetée. Sans modifier le débit, prélever ensuite la quantité d'huile requise pour l'essai tout en prenant soin de pas laisser entrer de poussière atmosphérique, de fibres de chiffon ou d'humidité. Ne pas utiliser de siphon. En l'absence d'un point de prélèvement adéquat, utiliser une louche.

Protéger l'échantillon de la lumière directe jusqu'à ce qu'il soit testé.

Eviter toute turbulence ou bulles d'air lors du versement de l'huile. Observer les spécifications nationales appropriées.

Des soins particuliers doivent être pris pour éviter la contamination lorsqu'un essai doit être effectué sur un camion-citerne, et à chaque fois qu'une résistance diélectrique élevée est attendue. La procédure suggérée ci-dessus doit être rigoureusement appliquée.

Caracteristiques

Tension de sortie
60 kV rms (30 kV – 0 – 30 kV) à 61,8 Hz

Paramètres des spécifications d'essai standard

Spécification	Temps de Repos	Temps montée tension	Temps agitation interm.	Temps de Repos interm.	Nombre d'essais	Duree maxi de l'essai	Résultat
Essai 5 min	1 min.	2 kV/s	30 s	30 s	3	4 min. 30 s	Moyenne
IEC156 etc.	3 min.	2 kV/s	optional	2 min	6	16 min.	Moyenne
EN 60156	5 min	2 kV/s	optional	2 min	6	18 min	Moyenne
ASTM D877	2 min. 20 s	3 kV/s	-	1 min.	5	8 min.	Moyenne
ASTM D1816	3 min.	0,5 kV/s	Continuous	1 min.	5	17 min.	Moyenne
UNE21	10 min	2 kV/s	1 min.	4 min.	6	38 min.	Moyenne des dernier 5 essais
Tenue 'A'		2 kV/s	Essai de rampe jusqú á la tension pré definie pendant 1 minute, ou jusqú au claquage				
Tenue 'B'		2 kV/s	Idem ci-dessus; continuation jusqú au claquage ou jusqú á la tension d'essai maximale de l' OTSPB.				
BS 5730a	-	2 kV/s	1 min.	1 min.	Essai de tenue á 22 kV, 30 kV ou 40 kV (selon la catégorie d'equipment et le ecartement des electrodes) pendant 1 min. En cas de claquage, deux tests successifs réussis sont nécessaire		
CEI156 etc. est egalement BS148, BS 5874, VDE 0370, NFC 27, CEI 344, ГОСТ 6581, SABS 555, AS 1767, STAS 286 and IP 295. La tension du premier claquage n'est pas prise en compte dans les calcul de la valuer moyenne dans la cadre de la NFC 27, STAS 286 et l'UNE 21							

Essai de tenue A
La tension monte à 2 kV/s jusqu'à la valeur sélectionnée. Elle est maintenue durant 1 minute puis est retirée à moins qu'un claquage n'apparaisse entre temps.

Essai de tenue B
La tension monte à 2 kV/s jusqu'à la valeur sélectionnée, puis est maintenue durant 1 minute puis continue à monter à 2 kV/s jusqu'au claquage ou jusqu'à la tension maximale.

Affichage
Un afficheur à cristaux liquides à matrice par points donne des informations alpha numérique ainsi que la tension d'essai en kV – 2 digits.

Gamme de température
En fonctionnement 0 °C to 40 °C
En stockage –30 °C à +65 °C

Gamme d'humidité
En fonctionnement 80% d'humidité relative à 40 °C
En stockage 93% d'humidité relative à 40 °C
95% d'humidité relative à 25 °C cyclique
(Conformément à la BS 2011 – partie 1)

Borne d'entrée
Par un chargeur de batterie ou une prise d'entrée avec une alimentation véhicule 12 V.

Sécurité
Cet appareil respecte les clauses des normes CEI 1010-1 (1995), EN61010-1 (1995). L'interverrouillage de sécurité répond à la norme BS 5304 (1988).

CEM
Cet appareil d'essai respecte les clauses des norme EN50081-1 et EN50082-1 (1992).

Alimentation
Chargeur interne 12 V, 12 Ah, batterie (Autonomie 12 h en fonctionnement continu). Le chargeur d'alimentation peut être compris de 85 V à 265 V — 50/60 Hz.

Caracteristiques

	12 V négatif au châssis ¡a l’aide du cordon véhicule (cela ne recharge pas la batterie interne)
Fusibles	2 x F6, 3 A, IEC 127/1, 20 mm x 5 mm, fusible HPC.
Dimensions	373 mm x 259 mm x 247 mm sans accessoires
Poids	19 Kg sans accessoires
Nettoyage	Essuyer l'instrument déconnecté avec un chiffon propre imbibé d'eau savonneuse ou d'alcool isopropylique [IPA].

Bedienungsanleitung

Warnungen

1. Darauf achten, daß das Batterieladegerät vor Gebrauch richtig geerdet wird. Das Batterieladegerät darf nur an eine Steckdose mit funktionierendem Erdleiter angeschlossen werden.

2. Das Batterieladegerät darf nur mit einem Markennetzstecker verwendet werden, und die Spannungsversorgung muß durch Isolation anhand von Trennvorrichtungen geschützt sein, d.h. durch Sicherungen und/oder Leistungsschalter. Verwendet werden sollten eine Sicherung oder ein Leistungsschalter bis maximal 5 A. Das Batterieladgegerät darf nicht mehr verwendet werden, wenn es beschädigt, in Wasser getaucht oder dem Regen ausgesetzt ist.

3. Das OTS 60PB darf nur zur Prüfung elektrischer Sorten von Isolieröl eingesetzt werden. Andere leicht entzündliche Stoffe, wie z.B. Benzin, dürfen nicht geprüft werden.

4. Die Prüfkammer muß immer vollkommen sauber sein, insbesondere vor einer durchzuführenden Prüfung. Ausgelaufendes/verschüttetes Öl in der Prüfkammer oder am Prüfgerät stets abwischen!

5. Die Prüfelektroden und deren Umgebung müssen stets vollkommen sauber sein, insbesondere vor einer durchzuführenden Prüfung. An den Elektroden dürfen sich auch keine Grübchen gebildet haben (Pitting).

6. Das Prüfgerät ist mit hochkapazitiven Keramiksicherungen nach IEC 127 ausgestattet. Bei Einbau von Ersatzsicherungen in das Prüfgerät ist darauf zu achten, daß diese Ersatzsicherungen die vorstehende Norm erfüllen (siehe das Kapitel TECHNISCHE DATEN bzgl. der tecnischen Spezifikation im einzelnen). Glassicherungen DÜRFEN aufgrund ihrer niedrigen Schaltleistung NICHT verwendet werden.

7. Zur Durchführung einer Ölprüfung dürfen nur die korrekten Ölprüfbehälter verwendet werden. Diese werden von AVO INTERNATIONAL LIMITED hergestellt; die Teilenummern sind im Kapitel ZUBEHÖR aufgeführt. Das Prüfgerät darf nur mit eingesetztem Prüfbehälter in Betrieb genommen werden.

8. Bei Einstellung des Elektrodenabstands stets zuvor das Ölprüfgerät abschalten (Schalter an der Rückseite des Geräts!)

9. Gehäusebleche oder andere Teile dürfen nicht entfernt werden, da sonst stromführende Teile freigelegt werden.

   Einstellungen und Reparaturen dürfen nur von ausgebildeten Meßgerätetchnikern durchgeführt werden, die die Gefahren beim Arbeiten an Hochspannung führenden Geräten kennen. Im Inneren des Prüfgerätes befindliche Kondensatoren können auch bei Trennung des Apparates vom Netzanschluß immer noch geladen sein (insbesondere bei einem Fehlerzustand des Geräts!).

   Eine für das Prüfgerät geltende Garantie erlischt sofort, wenn solche Arbeiten nicht vom Hersteller oder einem seiner Fachhändler ausgeführt werden.

10. Wenn vermutet wird, daß die Schutzvorrichtungen des Prüfgeräts Schaden gelitten haben, darf das Gerät nicht mehr eingesetzt werden; es muß sofort außer Betrieb genommen und an den Hersteller oder einen seiner Fachhändler zur Reparatur eingesandt werden.

    Eine Beeinträchtigung/Beschädigung der Schutzvorrichtungen kann z.B. vermutet werden, wenn das Prüfgerät sichtbare Anzeichen einer Beschädigung aufweist, z.B. an den membranschaltern und Sichtbereichen, die beabsichtigten Messungen nicht mehr ausführt, längere Zeit unter ungünstigen Bedingungen gelagert war oder harten Transportbelastungen ausgesetzt war.

11. Wenn das Ölprüfgerät starken Veränderungen im Umgebungsklima ausgesetzt gewesen ist, z.B. bei der Luftfeuchtigkeit oder Temperatur, muß es vor seinem ersten Einsatz nicht weniger als 12 Stunden lang den neuen Bedingungen entsprechend akklimatisiert werden.

12. Das Prüfgerät sollte nicht transportiert werden, während in der Prüfkammer noch ein gefüllter Prüfbehälter eingesetzt ist.

Bedienungsanleitung

Vorsichtsmaßnahmen
Die eingebaute Batterie sollte wenigstens alle 6 Monate neu aufgeladen werden, um ein möglichst langes Arbeitsleben zu gewährleisten.

Der Stromkreis des Prüfgeräts enthält gegen statische Elektrizität empfindliche Bauteile. Bei Öffnung des Gehäuses (damit erlischt automatisch jede Garantie auf das Gerät, wenn der Eingriff nicht vom Hersteller oder einem seiner Fachhändler vorgenommen wird) müssen die Leiterplatten (PCBs) mit größter Vorsicht behandelt werden. Der Umgang mit solchen Bauteilen muß nach Maßgabe der technischen Spezifikationen DEF STAN 59-98 und BS 5783 erfolgen, den Normen für den Umgang mit elektrostatisch empfindlichen Teilen.

Vorbereitung des Prüfbehälters and der Elektroden

1. Vor der Befüllung mit der Ölprobe müss der Ölprüfbehälter gründlich gereinigt werden. Die einzusetzenden Reinigungsverfahren werden im Normalfall durch die nationalen technischen Spezifikationen/Normen zur Ölprüfung vorgeschrieben und sollten eingehalten werden. Dazu gehört gewöhnlich auch das Ausspülen mit einem Teil der Ölprobe. Die Probe sollte so in den Behälter gegeben werden, daß sich keine Luftblasen bilden; der Behälter kann bis zu einem Pegelstand von 500 ml befüllt werden. (Zur Vermeidung von Kontamination sollte der Ölprüfbehälter Bedeckel sein, wenn man den Behälter vom Befüllungsort zum Ölprüfgerät bringt und darin einsetzt.)

2. Die Elektroden und alle umgebenden Teile, die mit der zu prüfenden Ölprobe in Kontakt kommen, gründlich reinigen. Vor der endgültigen Befüllung mit dem zu prüfenden Öl wird ein Ausspülen mit einem Teil der Ölprobe empfohlen. Es kann ratsam sein, vor dem Herausnehmen des Ölprüfbehälters nach Öffnen der Prüfkammertür zu warten, bis das Öl nicht mehr von den Elektroden tropft. Dies verringert unter Umständen den Reinigungsbedarf des Prüfkammerbodens.

3. Den Abstand zwischen den Elektroden entsprechend den Anforderngen der auszuführenden Prüfspzifikation einstellen. Der Zubehörsatz enthält zu diesem Zweck eine Abstandslehre. Die Klemmschrauben unten an den Elektrodenhaltern müssen gelockert und die Gleitarme so verschoben werden, daß der Abstand ungefähr in der Mitte zwischen den beiden Haltern angeordnet ist. Eine Seite feststellen, indem die Klemmschraube am Halter dieser Seite festgezogen wird; die andere Seite so einstellen, daß bei Einführung der Abstandslehre zwischen den Elektroden diese mit beiden gleichzeitig in Kontakt ist. Dann die Klemmschraube des zweiten Elektrodenhalters ebenfalls festziehen. Nach Einstellung den Abstand erneut prüfen.

   Nachstehend folgt eine tabellarische Auflistung der verschiedenen Elektrodenformen und Abstände für einige häufig vorkommende Prüfspezifikationen. Jede in das OTS 60PB ingebaute nationale Norm ist so angeordnet, daß bei Auswahl der Prüfung nach dieser Norm stets die zugehörige Elektrodenform und der erforderliche Abstand auf dem Display angezeigt werden.

gewähite Standard-Test-daten	EN60156 AS 1767 BS 5874 BS 5730 IEC 156 IP 295 NFC 27 SABS 555 UNE 21	CEI 10-1 ГОСТ 6581 VDE 0370 STAS 286	ASTM D1816	ASTM D877
Electroden-form	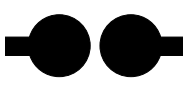	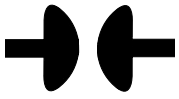	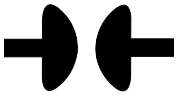	
Electroden abstand	2,5 mm		2,0 mm	2,5 mm

Bedienungsanleitung

Prüfbehälter in Prüfkammer einführen

1. Die Tür der Prüfkammer öffnen, indem man sie nach unten in die waagrechte Lage zeiht.

   Bedeckel den gefüllten Ölprüfbehälter abnehmen und den Behälter über die Türschale bis zum Anschlag in die Prüfkammer hineinschieben.

   Durch vollständiges Schließen der Tür die Prüfelektroden in das Öl eintauchen. Hierbei verringert ein langsames Schließen der Tür das Risiko eines Lufteinschlusses im Öl.

   Die Ölprobe im Prüfbehälter ist jetzt zur Prüfung der dielektrischen Stärke bereit.

   Hinweis: Wenn die Prüfreihe beendet ist, müssen der Prüfbehälter aus der Prüfkammer herausgenommen und wieder aufgesetzt werden.<None> 3

Testspezifikation	Anfangsstandzeit	Anstiegsrate der Prüfsspannung	Zwischenrührzeit	Zwischenstandzeit	Anzahl der Tests	Maximale Dauer der Prüfzeit	Ergebnis
5-Minuten Test	1 Min.	2 kV/s	30 s	30 s	3	4 Min. 30	Durchschnittswert
IEC156 etc.	3 Min.	2 kV/s	optional	2 Min	6	16 Min.	Durchschnittswert
EN 60156	5 Min	2 kV/s	optional	2 Min	6	18 Min	Durchschnittswert
ASTM D877	2 Min. 20 s	3 kV/s	-	1 Min.	5	8 Min.	Durchschnittswert
ASTM D1816	3 Min.	0,5 kV/s	Kontinuität	1 Min.	5	17 Min.	Durchschnittswert
UNE21	10 Min	2 kV/s	1 Min.	4 Min.	6	38 Min.	Mittelwert der letzen fünf Tests
Kurztest ‘A’		2 kV/s	Anstiegsrampe des vorgewählten Wertes für eine minute Test oder Durchschlag				
Kurztest ‘B’		2 kV/s	Wie Kurztest ‘A’, aber kontinuierlich bis zum Durschlag oder bis zum eingestellten Maximumwert des Testes.				
BS5730a	-	2 kV/s	1 Min.	1 Min.	Gewählter Test bei 22 kV, 30 kV oder 40 kV (je nach Ausrüstungskategorie und Elektrodenabstand) für eine Minute. Wenn ein Durchschlagerfolgt, werden zwei weitere Tests durchgeführt, beide müssen die richtigen Werte haben um akzeptiert zu werden.		
IEC156 usw.beinhaltet BS 148, BS 5874, VDE 0370, NFC 27, CEI 344, ГОСТ 6581, SABS 555, AS 1767, STAS 286 und IP 295. NFC 27, STAS 286 und UNE 21 unter Weglassen des ersten Durchchlagswertes wird der kalkulierte Wert angezeigt.							

Bedienungsanleitung

VORBEREITUNG DES ÖLPRÜFGERÄTES

1. Durch Abnehmen der Schutzdeckel das Display und den Ölbehälterbereich öffnen. Das netzbetriebene Ladegerät an die hintere Anschlußbuchse anschließen und einschalten, wenn das Gerät nicht mithilfe der eingebauten Batterie betrieben werden soll. Oder den 12 V Fahrzeugkabelsatz an die hintere Anschlußbuchse und die 12 V Zigarrenanzünder-/Zigarettenanzünderbuchse eines Fahrzeugs (mit Minuapol AM Chassis!) anschließen. Dies sollte man aber nur dann machen, wenn die eingebaute Batterie leer und auch keine Netzspannung für das Netzladegerät verfügbar ist. 15 Minuten warten, bis die eingebaute Batterie wieder einen einsatzfähigen Ladezustand erreicht hat; erst dann mit den Tests beginnen.

2. Mit dem hinteren Schalter das Gerät einschalten; dann, falls erforderlich, den AN/AUS-Schalter imm vorderen Bedienfeld drücken, um das Gerät zu starten. Der rückwärtige Schalter braucht nur ausgeschaltet zu werden, wenn das Gerät über längere Zeit (d.h. länger als sechs Monate) gelagert werden soll. Auf dem Display erscheint kurz die Copyright-Meldung, dann folgt der Menübildschirm des Hauptprogramms. Die von diesem Hauptmenü aus zugänglichen Optionen sind:

OPTIONS	AS 1767
BS 148	ASTM D877
BS 5730a	ASTM D1816
BS 5730a LEPLC	CEI 10-1
BS 5874	TOCT 6581
EN 60156	IP 295
IEC 156	NFC 27-221
ÜBERLAST	SABS 555
5-MINUTEN-TEST	UNE 21
	VDE 0370
	SELBSTTEST

Im Hauptmenü werden den drei unter dem Display befindlichen Bedienungstasten folgende Funktionsbeschriftungen zugeordnet (von links nach rechts): '▲', '▼' und "AUSWAHL". Mit den Pfeiltasten können die Menüoptionen durchlaufen werden; die Taste "AUSWAHL" aktiviert die jeweils durch Unterlegung hervorgehobene Option.

Hinweis: Das Display zeigt jeweils nur fünf Menüoptionen auf einmal an; welche Optionen dabei gerade gezeigt werden, ist abhängig von der zuletzt verwendeten Option. Beim Bilddurchlauf ist stets die durch Unterlegung hervorgehobene Funktion auswahlbereit.

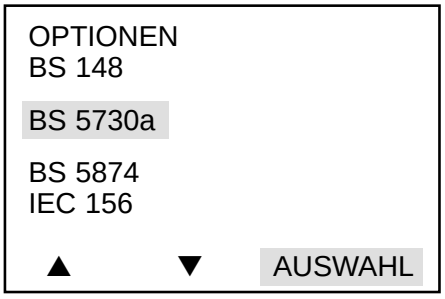

Abbildung 4 Beispiel: Menüdisplay

3. Die gewünschte Option wählen und den auf dem Display jetzt erscheinenden Anweisungen folgend weitermachen.

Nachstehend werden die Funktionen der Menüoptionen im einzelnen beschrieben. Für den Benutzer werden nicht alle auf einmal von Interesse sein.

Bedienungsanleitung

Auswahl 'OPTIONEN' im Hauptmenü
Das Untermenü 'OPTIONEN' stellt folgende Funktionen zur Verfügung:

SPRACHENWAHL
LETZTE ERGBN
DRUCKERSTEUERUNG
ANZEIGE KONTRAST
GRENZE-GUT/FEHLER
MENU

Durchlauf und Auswahl erfolgen wie oben bereits beschrieben.

Einstellung des Kontrasts
Bei Auswahl von 'KONTRAST' läßt sich die Lesbarkeit des Bildschirms über die Tasten 'Dunkler/Heller' nachjustieren. 'WAEHLEN' drücken, um zum Untermenü 'OPTIONEN' zurückzukehren.

Hinweis: Wenn beim Einschalten des Geräts die mittlere Taste gedrückt gehalten wird, erscheint zunächst der Bildschirm zur Einstellung des Kontrasts. Die Taste muß noch für etwa 1 Sekunde lang nach Loslassen des An/Aus-Schalters gedrückt bleiben.

Auswahl einer Sprache
Das Display kann in einer von sechs Sprachen erscheinen:

ENGLISH
FRANCAIS
DEUTSCH
ESPANOL
PORTUGUES
ITALIANO

Durchlaug und Auswahl erfolgen wie oden bereits beschrieben. 'WAEHLEN' drücken, um zum Untermenü zurückzukehren.

Hinweis: Wenn beim Einschalten des Prüfgeräts die rechte Taste gedrückt gehalten und erst nach Erscheinen der Copyright-Meldung losgelassen wird, erscheint zunächst das Sprachmenü auf den Bildschirm. Nach Auswahl der gewünschten Sprache mit dem Rest des Untermenüs 'OPTIONEN' weitermachen.

Ansicht der letzten Ergebnisse
Nach Beendigung einer Prüfreihe kann man sich die einzelnen Durchschlagspannungen auf dem Bildschirm anzeigen lassen. Durch Auswahl dieser Option läßt sich die letzte aufgeführte Prüfreihe wieder aufrufen; die Ergebnisse werden auf dem Bildschirm angezeigt, und zwar auch nach einem Timeout der Abschaltautomatik.

'Pass/Fail'-Einstellung
(Einstellung des Grenzwerts für Pruufung OK/NICHT OK)
Bei Aktivierung dieser Funktion wird ein vom Kunden gewünschter Grenzwert für Prüfung OK/NICHT OK bei den automatischen Prüfreihen vorprogrammiert. Im anderen Fall, wenn diese Funktion nicht aktiviert ist, werden am Ende der Prüfreihe wie gewöhnlich Mittelwert und Standardabweichung angezeigt. Mit der mittleren Taste wird der Einstellbildschirm gewählt, dessen 'OBEN/UNTEN'-Tasten den numerischen OK-Grenzwert in kV bestimmen. Nach Einstellung dieser 'Pass/Fail'-Grenze zum Hauptmenü oder einem anderen Menüpunkt im Untermenü 'OPTIONEN' zurückkehren.

Fehlerüberwachung
Die Software des Mikroprozessors enthält Routinen zur Betriebsüberwachung des Ölprüfgeräts. Falls doch einmal ein Problem auftreten sollte, ob nun durch das Prüfgerät oder von außen verursacht, kann die laufende Prüfng ab dem Punkt fortgesetzt werden, bei dem das Problem aufgetreten ist. Ist dies nicht möglich, wird das Prüfgerät in einen sicheren Zustand gesetzt und der Benutzer wird durch eine auf dem Display erscheinende Meldung auf die Situation hingewiesen. Der erste Schritt zur Behebung eines Fehlers besteht darin, das Gerät am rückwärtigen Schalter erst aus- und dann wieder anzuschalten; dies ist die Reset-Funktion des Systems. Das Gerät über den Schalter im vorderen Bedienfeld wieder einschalten und erneut die gewünschte Prüfreihe auswählen. Läßt sich die Fehlermeldung hierdurch nicht beseitigen, sollte man sich an den Hersteller oder seine Fachhändler wenden — siehe Seite ... .

Bedienungsanleitung

Automatische Prüfreihen
Das Arbeiten mit den vorprogrammierten Spezifikationen zur Ölprüfung wird nachstehend beschrieben. Das Hauptmenü mit den Tasten '▲' '▼' durchlaugen, bis die gewünschte Spezifikation hervorgehoben ist; dann 'WAEHLEN' drücken.

Nach Auswahl einer Prüfspezifikation erscheint der Name der gewählten Ölprüfung auf dem Display (und verbleibt dort währen der ganzen folgenden Prüfreihe); dazu erhält der Benutzer die Möglichkeit, mit der linken Taste die Prüfreihe zu 'START' oder mit der rechten Taste zum Hauptmenü zurückzukehren. In einem Unterdisplay oben auf dem Beildschirm erscheint die Meldung 'PRÜFBEHÄLTER EINSETZEN!'; mit dieser Meldung soll der Benutzer daran erinnert werden, wie wichtig es ist, den korrekten Ölprüfbehälter einzusetzen. Auf dem Display wird auch die Art der Elektroden mit zugehörigem Abstand zngezeigt, die für die ausgewählte technische Spezifikation gelten. Nach dem Start wird die Prüfreihe vollkommen automatisch ausgeführt.

5-Minuten-Test
Hinweis: Dieser Test läuft nicht im Standardformat ab und dient nur zur schnellen Bewertung des Ölzustandes.

1. Nach Betätigung der Taste 'START' erscheint ein Bildschirm, der der Darstellung in Abbildung 5 ähnlich ist.

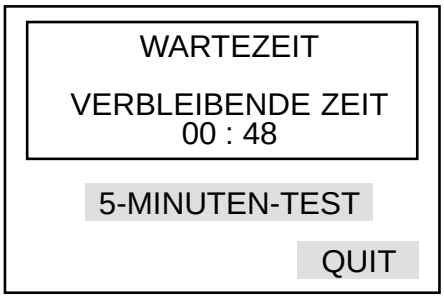

Abbildung 5 Bildschirm für Anfangsstehzeit

Das auf dem Bildschirm erscheinende Unterdisplay meldet dem Benutzer, daß für die zu prüfende Ölprobe die Anfangsstehzeit läuft; dazu wird die noch verbleibende Reststehzeit angegeben (die Zeituhr läuft bis 0 zurück). In diesem Fall wird eine Anfangsstehzeit von 1 Minute verwendet.

2. Nach Ablauf der Anfangsstehzeit wird die Pruufhochspannung eingeschaltet und an die Ölprobe gelegt. Es erscheint ein Bildschirm mit 'TEST 1', der der Darstellung in Abbildung 6 ähnlich ist.

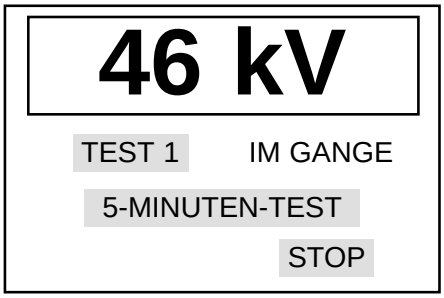

Abbildung 6 Bildschirm: Anliegende prüfspannung

Das Unterdisplay zeigt die an die Ölprobe gelegte Prüfspannung an; diese Spannung steigt so lange um 2 kV/s an, bis ein Durchschlag auftritt oder die Höchstspannung erreicht ist. Die Warnanzeige 'Hochspannung' bleibt dabei die ganze Zeit erleuchtet. Die Nummer des gerade innerhalb der Prüfreihe laufenden Tests wird angezeigt, und es erscheint die Meldung 'LAUFT'.

3. Bei Auftreten eines Durchschlags (oder Erreichen der Höchstspannung) wird die Prüfspannung abgeschaltet; die 'kV' Warnanzeige erlischt, und das Prüfgerät tritt in die Ölproben-Rührphase ein. Der Rührer dreht sich 30 Sekunden lang; dabei bleibt die Durchschlagspannung des Vorangegangenen Tests auf dem Display stehen. Der Bildschirm ist der Darstellung in Abbildung 7 ähnlich.

Bedienungsanleitung

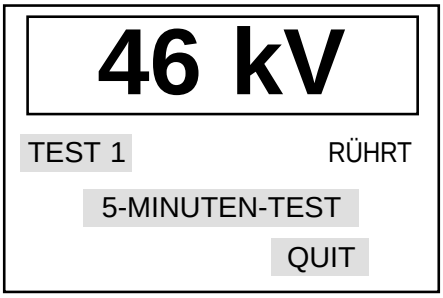

Abbildung 7 Bildschirm: Rührphase

Dieses Display zeigt auch die noch verbleibende Rührzeit an, und zwar im Wechsel mit den Worten ‘RÜHRVORGANG LÄUFT’.

4. Nach Beendigung des Rührvorgangs tritt das Prüfgerät in die Zwischenstehzeitphase ein, bei der die Ölprobe 30 Sekunden lang in Ruhe stehen gelassen wird. Auf dem Display erscheint wiederum die noch verbleibende Stehzeit im Wechsel mit den Worten ‘STEHT’; die Durchschlagspannung erscheint auch weiterhin auf dem Display. Der Bildschirm ist der Darstellung in Abbildung 8 ähnlich.

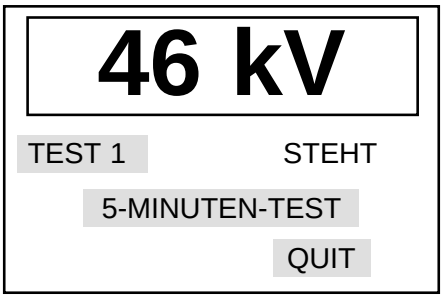

Abbildung 8 Bildschirm: Zwischenstehzeit

5. Nach Beendigung von Schritt (4) beginnt die Prüfspannung wieder wie im oben beschriebenen Schritt (2) anzusteigen, diesesmal für ‘TEST 2’, und der Prüfzyklus wiederholt sich.

6. Die Schritte (3), (4) und (5) werden wiederholt, so daß die Prüfspannung ein drittes Mal wieder angelegt wird. Nach Abschalten der Prüfspannung beim dritten Test erscheint auf dem Display die aus den drei Tests in der Prüfreihe ermittelte durchschnittliche Durchschlagspannung. Der Bildschirm ist der Darstellung in Abbildung 9 bzw. Abbildung 10, wenn die Option ‘PASS/FAIL’ (‘OK/NICHT OK’) gewählt wurde, ähnlich.

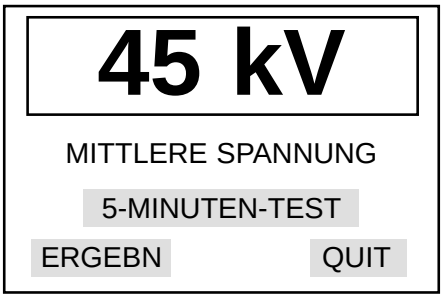

Abbildung 9 Birdschirm: Mittlere Durchschlagspannung

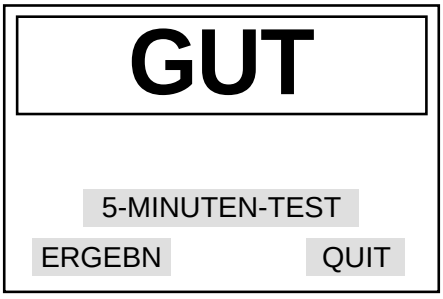

Abbildung 10 Bildschirm: ‘PASS’-Bildschirm

Bedienungsanleitung

Die drei Bedientasten nehmen nun neue Funktionen an. Die linke mit ‘ANSICHT’ beschriftete Taste betätigen, um nacheinander die Spannungswerte der einzelnen Tests sowie den daraus ermittelten durchschnittlichen Spannungswert wieder aufzurufen.

Die Taste ‘NEU’ drücken, um zum Anfang der ‘5-MINUTEN-TEST’ Prüfreihe zurückzukehren; dann die Taste ‘START’ betätigen, um eine Prüfreihe zu wiederholen, oder mit der Taste ‘MENU’ zum Hauptmenü zurückkehren.

Hinweis: Während eine Prüfreihe läuft, kann ein laufender Test jederzeit mit der rechten Bedientaste ‘STOP’ beendet werden; es erscheint dann wieder das erste Display der gewählten Testoption. (Siehe Abbildung 4.)

Die Tests nach AS 1767, BS 148, BS 5874, CEI 10-1, TOCT 6581, IEC 156, IP 295, NFC 27-221, SABS 555, UNE 21 und VDE0370

1. Nach Betätigung der Taste ‘START’ beginnt die Prüfreihe mit ‘TEST 1’, und es erscheint ein Bildschirm, der der Darstellung in Abbildung 5 ähnlich ist.

   Das auf dem Bildschirm erscheinende Unterdisplay zeigt an, daß für die zu prüfende Ölprobe die Anfangsstehzeit von 3 Minuten läuft und die Zeit bis 0 zurückgezählt wird.

2. Nach Ablauf der Anfangsstehzeit wird die Prüfhochspannung eingeschaltet und langsam an die Ölprobe gelegt. Es erscheint ein Bildschirm, der der Darstellung in Abbildung 6 ähnlich ist.

   Das Unterdisplay zeigt die an die Ölprobe gelegte Prüfspannung an; diese Spannung steigt so lange um 2 kV/s an, bis ein Durchschlag auftritt oder die Höchstspannung erreicht ist. Die Warnanzeige ‘Hockspannung’ bleibt dabei die ganze Zeit erleuchtet. Die Nummer des gerade innerhalb der Prüfreihe laufenden Tests wird angezeigt, und es erscheint die Meldung ‘IM GANGE’.

3. Bei Auftreten eines Durchschlags (oder Erreichen der Höchstspannung) wird die Prüfspannung abgeschaltet; die ‘kV’ Warnanzeige erlischt, und das Prüfgerät tritt in die Ölproben-Rührphase ein. Der Rührer dreht sich für die Dauer von 1 Minute; dabei bleibt die Durchschlagspannung des vorangeganenen Tests auf dem Display stehen. Der Bildschirm ist der Darstellung in Abbildung 7 ähnlich.

   Dieses Display zeigt auch die noch verbleibende Rührzeit an, und zwar in Wechsel mit den Worten ‘RÜHRT’.

4. Nach Beendigung des Rührvorgangs tritt das Prüfgerät in die Zwischenstehzeitphase ein, bei der die Ölprobe 1 Minute lang in Ruhe stehen gelassen wird. Auf dem Display erscheint wiederum die noch verbleibende Stehzeit im Wechsel mit den Worten ‘STEHT’; die Durchschlagspannung erscheint auch weiterhin auf dem Display. Der Bildschirm ist der Darstellung in Abbildung 8 ähnlich.

5. Dann beginnt die Prüfspannung wieder wie im oben beschriebenen Schritt (2) anzusteigen, diesesmal für ‘TEST 2’, und der Prüfzyklus wiederholt sich.

6. Bei diesen technischen Spezifikationen müssen 6 aufeinanderfolgende Tests durchlaufen werden. Nach Abschalten der Prüfspannung beim letzten Test erscheint auf dem Display die aus den 6 Tests in der Prüfreihe ermittelte durchschnittliche Durchschlagspannung. Der Bildschirm ist der Darstellung in Abbildung 9 bzw. Abbildung 10, wenn die Option ‘PASS/FAIL’ (‘OK/NICHT OK’) gewählte wurde, ähnlich. Die Prüfung nach BS 148 umfaßt auch den empfohlenen ‘PASS’-Grenzwert und zeigt an, ob die Ölprobe den Test mit OK oder NICHT OK bestanden hat. Gleichzeitig wird auch die mittlere Durchschlagspannung angezeigt.

   Die drei Bedientasten nehmen nun neue Funktionen an. Die linke mit ‘ANSICHT’ beschriftete Taste betätigen, um nacheinander die Spannungswerte der einzelnen Tests sowie den daraus ermittelten durchschnittlichen Spannungswert wieder aufzurufen.

   Hinweis: Prüfungen nach UNE 21 unterscheiden sich wie folgt von der obigen Beschreibung: Die Anfangsstehzeit beträgt 10 Minuten, die Rührzeit 1 Minute, die Zwischenstehzeit 4 Minuten, und das Ergebnis wird als Mittelwert und Standardabweichung aus den letzten 5 der sechs durchlaufenen Tests gebildet.

Bedienungsanleitung

Prüfungen nach NFC 27-221 unterscheiden sich wie folgt von der obigen Beschreibung: Das Ergebnis ist der Mittelwert aus den letzten 5 der sechs durchlaufenen Tests.

Während eine Prüfreihe läuft, kann ein laufender Test jederzeit mit der rechten Bedientaste 'QUIT' beendet werden; es erscheint dann wieder das erste Display der gewählten Testoption.

Die Taste 'NEU' drücken, um zum Anfang der gewählten Prüfreihe zurückzukehren; dann die Taste 'START' betätigen, um eine Prüfreihe zu wiederholen, oder mit der Taste 'MENÜ' zum Hauptmenü zurückkehren.

Die ASTM D877 Tests

1. Nach Betätigung der Taste 'START' beginnt die Prüfreihe mit 'TEST 1', und es erscheint ein Bildschirm, der der Darstellung in Abbildung 5 ähnlich ist.

   Das auf dem Bildschirm erscheinende Unterdisplay zeigt an, daß für die zu prüfende Ölprobe die Anfangsstehzeit von 2 Minuten und 20 Sekunden läuft und die Zeit bis 0 zurückgezählt wird.

2. Nach Ablauf der Anfangsstehzeit wird die Prüfhochspannung eingeschaltet und an die Ölprobe gelegt. Es erscheint ein Bildschirm, der der Darstellung in Abbildung 6 ähnlich ist.

   Das Unterdisplay zeigt die an die Ölprobe gelegte Prüfspannung an; diese Spannung steigt so lange um 3 kV/s an, bis ein Durchschlag auftritt oder die Höchstspannung erreicht ist. Die Warnanzeige 'Hochspannung' bleibt dabei die ganze Zeit erleuchtet. Die Nummer des gerade innerhalb der Prüfreihe laufenden Tests wird angezeigt, und es erscheint die Meldung 'LAUFT'.

3. Bei Auftreten eines Durchschlags (oder Erreichen der Höchstspannung) wird die Pruufspannung abgeschaltet; die 'kV' Warnanzeige erlischt, und das Prüfgerät tritt in die Zwischenstehzeitphase ein, bei der die Ölprobe 1 Minute lang in Ruhe Stehen gelassen wird. Eine Rührzeit gibt es nicht. Der Bildschirm ist der Darstellung in Abbildung 8 ähnlich.

4. Nach Beendigung der Zwischenstehzeit beginnt die Prüfspannung wieder wie im oben beschriebenen Schritt (2) anzusteigen, diesesmal für 'TEST 2', und der Prüfzyklus wiederholt sich.

5. Bei dieser technischen Spezifikation müssen 5 aufeinanderfolgende Tests durchlaufen werden. Nach Abschalen der Prüfspannung beim letzten Test erscheint auf dem Display die aus den 5 Tests in der Prüfreihe ermittelte durchschnittliche Durchschlagspannung. Der Bildschirm ist der Darstellung in Abbildung 9 bzw. Abbildung 10, wenn die Option 'PASS/FAIL' ('OK/NICHT OK') gewählt wurde, ähnlich.

   Die drei Bedientasten nehmen nun neue Funktionen an. Die linke mit 'ANSICHT' beschriftete Taste betätigen, um nacheinander die Spannungswerte der einzelnen Tests sowie den daraus ermittelten durchschnittlichen Spannungswert wieder aufzurufen.
   Die Taste 'NEU' drücken, um zum Anfang der gewählten Prüfreihe zurückzukehren; dann die linke Taste 'START' betätigen, um eine Prüfreihe zu wiederholen, oder mit der Taste 'MENÜ' zum Haputmenü zurückkehren.

   Hinweis: Während eine Prüfreihe läuft, kann ein laufender test jederzeit mit der rechten Bedientaste 'STOP' beendet werden; es erscheint dann wieder das erste Display der gewählten Testoption.

Die ASTM D1816 Tests

1. Nach Betätigung der Taste 'START' beginnt die Prüfreihe mit 'TEST 1', und es erscheint ein Bildschirm, der der Darstellung in Abbildung 5 ähnlich ist. Das Rührwerk beginnt zu laufen und läuft während der ganzen Prüfreihe. Das auf dem Bildschirm erscheinende Unterdisplay zeigt an, daß für die zu prüfende Ölprobe die Anfangsstehzeit von 3 Minuten läuft und die Zeit bis 0 zurückgezählt wird.

2. Nach Ablauf der Anfangsstehzeit wird die Prüfhochspannung eingeschaltet und an die Ölprobe gelegt. Es erscheint ein Bildschirm, der der Darstellung in Abbildung 6 ähnlich ist.

Bedienungsanleitung

Das Unterdisplay zeigt die an die Ölprobe gelegte Prüfspannung an; diese Spannung steigt so lange um 0,5 kV/s an, bis ein Durchschlag auftritt oder die Höchstspannung erreicht ist. Die Warnanzeige 'Hochspannung' bleibt dabei die ganze Zeit erleuchtet. Die Nummer des gerade innerhalb der Prüfreihe laufenden Tests wird angezeigt, und es erscheint die Meldung 'LAUFT'.

3. Bei Auftreten eines Durchschlags (oder Erreichen der Höchstspannung) wird die Prüfspannung abgeschaltet; die 'kV' Warnanzeige erlischt, und das Prüfgerät tritt in die Zwischenstehzeitphase ein, bei der die Ölprobe 1 Minute lang in Ruhe stehen gelassen wird. Der Bildschirm ist der Darstellung in Abbildung 8 ähnlich.

4. Dann beginnt die Prüfspannung wieder wie im oben beschriebenen Schritt (2) anzusteigen, diesesmal für 'TEST 2', und der Prüfzyklus wiederholt sich.

5. Bei dieser technischen Spezifikation müssen 5 aufeinanderfolgende Tests durchlaufen werden. Nach Abschalten der Prüfspannung beim letzten Test erscheint auf dem Display die aus den 5 Tests in der Prüfreihe ermittelte durchschnittliche Durchschlagspannung. Der Bildschirm ist der Darstellung in Abbildung 9 bzw. Abbildung 10, wenn die Option 'PASS/FAIL' ('OK/NICHT OK') gewählt wurde, ähnlich.

   Die drei Bedientasten nehmen nun neue Funktionen an. Falls gewünscht, die linke mit 'ANSICHT' beschriftete Taste betätigen, um nacheinander die Spannungswerte der einzelnen Tests sowie den daraus ermittelten durchschnittlichen Spannungswert wieder aufzurufen.

   Die Taste 'NEU' drücken, um zum Anfang der gewählten Prüfreihe zurückzukehren; dann die linke Taste 'START' betätigen, um eine Prüfreihe zu wiederholen, oder mit der Taste 'MENÜ' zum Hauptmenü zurückkehren.

   Hinweis: Während eine Prüfreihe läuft, kann ein laufender Test jederzeit mit der rechten Bedientaste 'STOP' beendet werden; es erscheint dann wieder das erste Display der gewählten Testoption.

Überlastversuche
Es stehen drei Arten von überlastversuchen zur Verfügung: BS 5730a sowie die Überlastversuche A und B; mit ihrer Hilfe kann die Olprobe eine Minute lang einer bekannten Belastungsspannung unterzogen werden, um zu sehen, ob ein Durchschlag auftritt. Überlastversuch A läßt die Spannung auf einen voreingestellten Wert ansteigen, eine Minute lang auf diesem Wert bleiben und baut sie dann wieder ab (wenn nicht vorher ein Durchschlag erfolgt). Überlastversuch B läßt die Spannung auf einen voreingestellten Wert ansteigen, eine Minute lang auf diesem Wert bleiben und sich dann weiter erhöhen, bis der Höchstwert oder der Durchschlagspunkt erreicht ist (je nachdem, was zuerst eintritt).

Automatischer Überlastversuch nach der Spezifikation BS 5730a
Die Anzahl der ausgeführten Überlastversuche ist von den jeweiligen einzelnen Versuchsergebnissen abhängig; maximal können 3 Versuche ausgeführt werden. Die Überlastspannungsgrenzen sind in der Norm vorgeschrieben und abhängig von der Installationskategorie des Geräts, aus dem die Ölprobe entnommen wurde und auch vom Elektrodenabstand im Ölprüfgerät. Die grundlegende Reihenfolge für Überlastversuche nach dieser Norm ist: die Prüfspannung wird linear bis zur intern vorgewählten oberen Spannungsgrenze erhöht und bleibt 1 Minute lang auf diesem Grenzwert stehen. Danach wird die Spannung wieder abgeschaltet und der Versuch als OK betrachtet. Wenn während des Versuchs ein Durchschlag auftritt, müssen zwei weitere Überlastversuche mit dazwischen ligenden Steh- und Rührzeiten ausgeführt werden. Beide Versuche müssen erfolgreich verlaufen, wenn die Probe als OK abgenommen werden soll. Bei einem negativen Verlauf des zweiten Versuchs wird die Versuchsreihe beendet, da die Ölprobe nicht länger als OK abgenommen werden kann.

BS 5730a (Automatischer Überlastversuch)
1. Im Hauptmenü die Option 'BS 5730a' wählen. Auf dem Display erscheint dann die Eingabeaufforderung 'GERÄTEKATEGORIE'. Nähere Informationen sollten der technischen Spezifikation BS 5730a entnommen werden. Die Auswahl der Kategorien erfolgt über die Bedientasten. Auswahl von A, D mit der linken Taste und B, C, E, F über die mittlere Taste. Bei Betätigung der rechten Taste kehrt der Benutzer zum Hauptmenü zurück.

Bedienungsanleitung

2. Nach Betätigen der linken, mit A, D beschrifteten Taste erscheint der in Abbildung 11 gezeigte Bildschirm. Mit den linken und mittleren Bedientasten das Programm für den gewünschten Elektrodenabstand wählen. Dieser Abstand sollte vorher entsprechend dem jeweils erforderlichen BS 5730a Überlastversuch eingestellt worden sein.

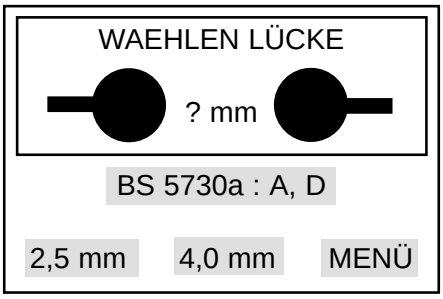

Abbildung 11 Beispieldisplay: Auswahl des Elektrodenabstands

3. Angenommen, die 2,5 mm Taste wurde gedrückt. Dann ändert sich jetzt der Bildschirm und sieht so aus wie in Abbildung 14 dargestellt. Es werden die jeweils korrekten Informationen zu Überlastspannung und Elektrodenabstand angezeigt — in diesem Beispiel sind dies: Überlsatspannung = 30 kV bei einem Abstand von 2,5 mm. Mit der linken Taste den Versuch starten. Bei Betätigung der rechten Taste kehrt der Benutzer zum Hauptmenü zurück.

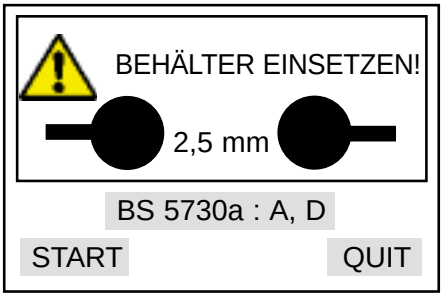

Abbildung 12 Beispieldisplay: BS 5730a Überlastversuch starten

4. Der Bildschirm nimmt nun das in Abbildung 6 dargestellte Standardformat an. Bei Betätigung der rechten Taste kehrt der Benutzer zum Hauptmenü zurück. Nach Erreichen der oberen Spannungsgrenze erscheint auf dem Display die verstrichene Zeit, während derer die Spannung bereits angelegen hat, bis eine Minute vorbei oder ein Durchschlag aufgetreten ist.

5. Die weitere Reihenfolge ist nun vom Ergebnis dieses ersten Überlastversuches abhängig. War dieser Versuch bereits erfolgreich, muß nicht weiter geprüft werden. Es erscheint ein Bildschirmdisplay wie in Abbildung 13a dargestellt.

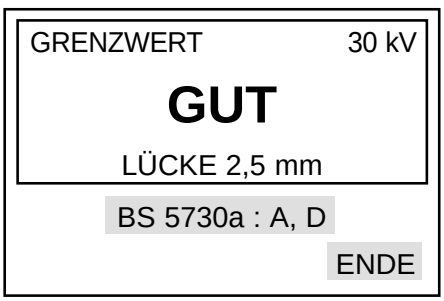

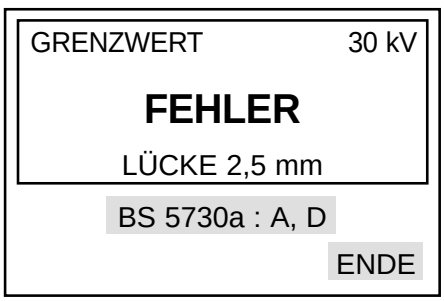

Abbildungen 13a Beispieldisplay: Ergebnisbildschirm nach BS 5730a Abbildungen 13b

6. Wenn der Überlastversuch nach BS 5730a nicht erfolgreich war, müssen zwei weitere aufeinanderfolgende Versuche durchgeführt werden. Vor dem Anlegen der Prüfspannung müssen eine Rührzeit von 1 Minute sowie eine Stehzeit von 1 Minute eingehalten werden. Der Bildschirm sieht aus wie in den Abbildungen 7 und 8 jeweils dargestellt.

Bedienungsanleitung

7. Als nächstes folgt ein erneutes (zweites) Anlegen der Überlastspannung. Obiger Schritt 4 wird wiederholt. Auf dem Display erscheint die Nummer des gerade laufenden Versuchs.

8. Die weitere Reihenfolge hängt nun vom Ergebnis dieses zweiten Versuches ab. Wenn der Versuch nicht erfolgreich war, hört die Versuchsreihe hier auf. Es erscheint der in Abbildung 13b dargestellte Bildschirm.

9. Wenn der zweite Versuch erfolgreich war, muß nun ein dritter Überlastversuch durchgeführt werden. Vor dem Anlegen der Prüfspannung müssen eine Rührzeit von 1 Minute sowie eine Stehzeit von 1 Minute eingehalten werden. Der Bildschirm sieht aus wie in den Abbildungen 7 und 8 jeweils dargestellt.

10. Als nächstes folgt ein erneutes (drittes) Anlegen der Überlastspannung. Obiger Schritt 4 wird wiederholt. Auf dem Display erscheint die Nummer des gerade laufenden Versuchs.

11. Wenn dieser Versuch erfolgreich war, erscheint der in Abbildung 13a dargestellte Bildschirm; war dieser Versuch nicht erfolgreich, erscheint der in Abbildung 13b dargestellte Bildschirm.

12. Nach Beendigung der Versuchsreihe (1, 2 oder 3 Überlastversuche sind ausgeführt worden) zeigt der Bildschirm das jeweilige ‘PASS/FAIL’ Display wie in den Abbildungen 13a/13B jeweils dargestellt. Bei Betätigung der rechten mit ‘ENDE’ beschrifteten Taste kehrt der Benutzer zum Hauptmenü zurück.

Kurztest A

1. Im Hauptmenü die Option ‘KURZTEST’ wählen. Auf dem Bildschirm ändert sich die Beschriftung der drei Bedientasten in ‘A’, ‘B’ und ‘MENÜ’. (Mit ‘MENU’ gelangt man in den Hauptmenü-Bildschirm zurück.)

2. Die linke mit ‘A’ beschriftete Taste drücken. Der Bildschirm erscheint wie in Abbildung 14 dargestellt.

   Mit den Tasten ‘▼’, und ‘▲’ läßt sich die Spannung für den Überlastversuch einstellen, bis der gewünschte Abnahmewert erreicht ist.

   Hinweis: Durch wiederholten Tastendruck ändert sich der Wert in 1 kV Schritten. Wird eine Taste gedrückt und festgehalten, ändert sich der Wert in 1 kV Schritten bis zum nächsten ganzen 5 kV Wert und danach in 5 kV Schritten.

3. ‘WAEHLEN’ drücken, um in den Bildschirm mit den Testoptionen zu gelangen (wie als Beispiel in Abbildung 15 gezeigt). Mit der Option ‘QUIT’ gelangt man zum Auswahlbildschirm für Überlastversuch A oder B zurück.

4. Falls erforderlich, durch Drücken und Festhalten der Taste ‘RÜHREN’ die Ölprobe durchrühren.

5. Die Taste ‘START’ drücken, um einen Test zu beginnen. Die Prüfspannung erhöht sich um 2 kV/s bis zum voreingestellten Wert, auf welchem sie dann 1 Minute lang bleibt (falls nicht vorher ein Durchschlag auftritt). Auf dem Display wird die Zeit angezeigt, während derer die Spannung anliegt.

6. Nach 1 Minute wird die Prüfspannung automatisch wieder entfernt/abgebaut und das Prüfergebnis ausgegeben.

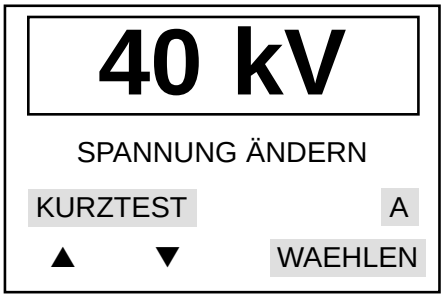

Abbildung 14 Bildschirmbeispiel: Einstellung der Spannung für einen Überlastversuch

Bedienungsanleitung

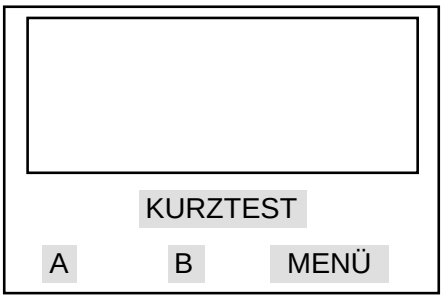

Abbildung 15 Beispiel: Optionen beim Überlastversuch

7. ‘NEU’ drücken, um zum Ausgangsbildschirm mit den Testoptionen zurückzukehren — bereit für einen Wiederholungstest. Aus diesem Menü heraus mit ‘QUIT’ und ‘MENÜ’ ins Hauptmenü zurückkehren.

Kurztest B
So wie bei Versuch A beschrieben vorgehen. Dabei aber beachten, daß, nachdem die Prüfspannung 1 Minute lang auf dem voreingestellten Wert gehalten worden ist, sie mit 2 kV/s weiter ansteigt, bis Durchschlag eintritt oder der Höchstwert erreicht ist. Erst dann wird sie automatisch abgeschaltet.

Selbsttest: Überprüfung der wichtigsten Schutz- und Funktionskomponenten
Mit der Option ‘SELBSTTEST’ lassen sich folgende Teile des Stromkreises prufen:

EEPROM
TASTATUR
KONTRAST (BILDSCHIRM)
TÜR
RÜHRVORRICHTUNG
PRÜFSPANNUNG
SYSTEMÜBERWACHUNG

NOTE: Für die ‘SELBSTTESTs’ muß der Ölprüfbehälter nicht mit einer Ölprobe gefüllt sein.

1. Im Hauptmenü die Option ‘SELBSTTEST’ wählen. Auf dem nun erscheinenden Anfangsbildschirm wird gewarnt, daß der Speicher durch einen EEPROM-Test gleich gelöscht werden wird. Die Pfeiltasten werden jetzt mit der Beschriftung ‘JA’, ‘NEIN’ und ‘ENDE’ versehen. (Durch Betätigen dieser letzten Taste kehrt man zum Hauptmenü zurück).

   Vorsicht: Eine Betätigung der Taste ‘JA’ löscht den EEPROM Speicher, einschließlich der Parameter für Eigentests und Überlastversuche sowie vorhandener Ergebnisdaten. Wenn diese Informationen noch gebraucht werden, darf die Taste ‘JA’ nicht gedrückt werden.
2. Mit der Taste ‘NEIN’ wird der EEPROM Test übersprungen und sofort mit dem Tastaturtest weitergemacht. Bei diesem Test läßt jede Taste, wenn sie gedrückt wird, ihre Zahl auf dem Display erscheinen und bestätigt damit, daß sie aktiviert ist.

3. Die linke Taste drücken, und dann die rechte, um mit den Displaytests für Kontrast weiterzumachen. Auf dem Bildschirm erscheint ein Prüfmuster; dann kann man mit der linken und mittleren Taste den Kontrast erhöhen bzw. verringern. Mit ‘WAEHLEN’ die Kontrasteinstellung bestätigen.

4. Als nächstes folgt eine Prüfung der Tür. Die Tür halb öffnen und prüfen, daß die Prüfung der HS Türschutzverriegelung mit OK abgenommen worden ist (wenn diese Verriegelung nicht richtig arbeitet würde die Selbsttest-Prüffolge bei Schritt 4 blockiert werden). Die Tür geöffnet lassen und ‘WEITER’ drücken.

5. Es folgt nun ein Test der Rührvorrichtung. Start drücken und in die Prüfkammer schauen, um zu sehen, ob sich der Rührer dreht. Während dieser Tests ist die HS Türschutzverriegelung bei geöffneter Tür aktiviert. Stop drücken, und prüfen, daß der Rührer aufhört, sich zu drehen. Die Tür wieder schließen.

Bedienungsanleitung

6. Es folgt ein Test der Prüfspannung. Start drücken und die angezeigte Spannung erhöht sich linear bis zum Durchschlagspunkt oder dem Höchstwert von 60 kV, wenn der Prüfbehälter mit gutem Öl gefüllt ist. Alternativ hierzu können auch die Elektroden und ihre Spindeln herausgenommen oder zurückgeschoben werden, bis der größtmögliche Luftabstand eingestellt ist; es wird dann ein Durchschlagswert zwischen 30 – 40 kV erwartet. Die kV Leuchte sollte bis zum Durchschlagspunkt aufleuchten. Die Taste 'Weiter' drücken.

7. Es folgt ein Test der Systemüberwachung. Diese überwacht ständig das System und löst bei einem Ausfall des Geräts einen Reset aus. Prüfen, ob die Meldung 'Systemüberwachung OK' erscheint (etwa 3 Sekunden lang).

   Hinweis: Wenn die eingebaute wiederaufladbare Batterie fast leer ist, erscheint ein blinkendes Batteriesymbol auf dem Display. Die Batterie muß wiederaufgeladen werden. Erfolgt dies nicht, und es wird weitergeprüft, erscheint ein durchgestrichenes Batteriesymbol.

Eine Sicherung austauschen
In den Haltern in der Tasche an der Rückwand des Meßgerätes sind zwei Sicherungen montiert. Bevor man eine Sicherung austauscht, MUSS das Prüfgerät vom Ladegerät oder Fahrzeugkabelsatz getrennt sein. Zum eigentlichen Austausch der Sicherung den Deckel in der Mitte des Halters aufschrauben und abnehmen. Die Sicherung herausnehmen, durch eine neue ersetzen und den Deckel wieder anbringen.

Dabei ist unbedingt darauf zu achten, daß nur Sicherungen des korrekten Nennwerts und Typs verwendet werden (siehe die technische Spezifikation bzgl. genauer Angaben). FS1 ist die Sicherung für den externe Eingang und hat eine Nennleistung von 6,3 A HBC, Typ F, nach IEC 127'1. FS2 ist die Sicherung für die eingebaute Batterie mit einer Nennleistung von 6,3 A HBC, Type F, nach IEC 127/1.

Drucken
Die nachstehenden Hinweise beschreiben die ***OTS60PB***-Softwareroutine für die Verwendung mit einem externen Drucker. Außerdem helfen sie Ihnen beim Einrichten des Druckers. Vergleichen Sie bitte auch die Betriebsanleitung Ihres Druckers.

Aufladen des Druckers
Der Drucker braucht eine Gleichstromquelle von 9 bis 12 Volt zum Aufladen der internen NiCad-Batterie. Das Druckerpaket enthält ein Ladegerät für den Anschluß an eine Wechselstromversorgung von 115 bis 230 Volt (85 bis 265 Volt), 50/60 Hz. Für sicheren Betrieb muß die Stromversorgung geerdet sein; verwenden Sie deshalb nur Netzsteckdosen mit Erdschutzleiter.

Die Batterien sind bei Lieferung eventuell nicht geladen. Für eine volle Aufladung werden ungefähr 14 Sunden benötigt, doch ist der Drucker nach 20 Minuten Ladezeit betriebsbereit.

Einstellen des Druckers
Normalerweise wird der Drucker ab Werk mit folgenden Voreinstellungen ausgeliefert:

Datenbits:	8
Parität:	Keine
Baudrate:	9600
Land:	GB
Druckverfahren:	Text
Auto-off:	5 Min.
Emulation:	Standard
Summenrelais:	Normal

Die oben angeführten Einstellungen eignen sich für das ***OTS60PB***, dedoch mit Ausnahme der Baudrate, die auf 1200 baud eingestellt werden sollte. Dies geschieht wie folgt:

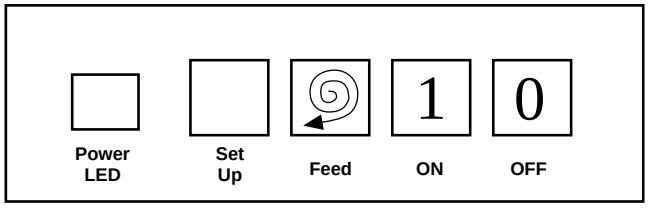

Bedienungsanleitung

Halten Sie die Taste **SET UP** gedrückt und drücken Sie kurz die Taste **ON**. Der Drucker gibt seine Programmbetriebsart ein und druckt eine Liste der gegenwärtigen Einstellungen aus. Durchlaufen Sie die Liste der Parameter durch Drücken der Taste **PAPER FEED**. Durch Drücken der Taste **SET UP** werden die einzelnen Parameter durch den Bereich erlaubter Werte geführt.

Wenn 15 Sekunden lang keine Taste gedrückt wird, wird der Programmierungsbetrieb beendet, und jegliche vorgenommenen Änderungen gehen verloren. Drücken Sie zum Beenden des Programmierbetriebs und zur Speicherung der Einstellung gleichzeitig die Tasten **SET UP** und **FEED**.

Die Zeitspanne für automatische Abschaltung (Auto-off) kann geändert werden. Dafür stehen die Einstellungen auf 1 Minute, auf 5 Minuten oder auf keine automatische Abschaltung (Disabled) zur Verfügung. Bedenken Sie, daß die automatische Abschaltung die Batteriekapazität schont.

Anschluß an das OTS60PB
Das ***OTS60PB*** wird mit einem Spezialkabel für den Anschluß des Druckers geliefert. Dieses Kabel wird in die vierpolige Buchse an der Rückseite des Öltestgeräts eingesteckt.

Einstellen des Öltestgeräts
Das ***OTS60PB*** benötigt nur geringe Einstellmaßnahmen für das Ausdrucken, da die RS232-Parameter ab Werk auf folgende Werte eingestellt sind:

Datenbits	8
Parität:	Keine
Baudrate:	9600

Das Untermenü **OPTIONEN** ist um **DRUCKERSTEUERUNG** erweitert worden. Wenn Sie **DRUCKERSTEUERUNG** aufrufen, erscheint ein weiteres Untermenü mit folgenden Titeln:

ANZAHL KOPIEN	**1 / 2**
QUIT	
DRUCKE LETZTE ERGBN	
AUTOM. AUSDRUCK	**AUS / EIN**
▲ ▼	**WAEHLEN**

Mit **ANZAHL KOPIEN** können Sie ein oder zwei Exemplare ausdrucken lassen. Wiederholtes Drücken der Menütaste **WAEHLEN** schaltet zwischen einem und zwei Exemplaren hin und her.

QUIT bringt Sie zum Untermenü **OPTIONEN** zurück.

DRUCKE LETZTE ERGBN bewirkt das Ausdrucken der Ergebnisse des zuletzt durchgeführten Tests. In den meisten Fällen erscheint am Ende eines Tests die Menütaste **DRUCKEN** in der Anzeige. Dies ist ein bequemeres Verfahren zum Ausdrucken. Die Option **DRUCKE LETZTE ERGBN** ist vor allem nützlich, wenn die Kammertür geöffnet oder das Instrument nach einem Test abgeschaltet worden ist.

Die letzten Meßdaten werden im Öltestgerät gespeichert und können zur Überprüfung oder zum Ausdrucken abgerufen werden, bis der nächste Test eingeleitet wird.

Wenn **AUTOM. AUSDRUCK** eingeschaltet ist, werden die Ergebnisse nach Abschluß des Tests automatisch ausgedruckt. Wiederholtes Drücken der Menütaste **WAEHLEN** schaltet zwischen **AUS** und **EIN** hin und her.

Entnahme von Ölproben und Prüfung der Durchschlagsfestigkeit des Öls

Die folgenden Hinweise richten sich in erster Linie an Bediener, die mit der Materie noch nicht vollkommen vertraut sind, und sollten zusammen mit den entsprechenden technischen Daten zur Ölprüfung gelesen werden.

Unbrauchbares Öl und seine Ursachen

Es gibt vier hauptsächliche Ursachen, aus denen das Öl von Transformatoren und Schaltvorrichtungen unbrauchbar werden kann

1. Geringe Durchschlagsfestigkeit
2. Hoher Säuregehalt
3. Hoher Schlammgehalt
4. Zuviel nichtgebundenes Wasser

Eine geringe Durchschlagsfestigkeit kann auf verschiedene Ursachen zurückzuführen sein, von denen Fremdkörper oder Fasern in Verbindung mit Wasser am häufigsten auftreten. Für sich alleine genommen wirken sie sich nur geringfügig aus; zusammengenommen jedoch können sie bereits bei einer Verunreinigung von wenigen Teilchen pro Millionen zu einer beachtlichen Verringerung der Durchschlagsspannung des Öls führen. Ein hoher Säure- oder Schlammgehalt des Öls sollte ebensowenig toleriert werden wie nichtgebundenes Wasser; diese Merkmale verringern jedoch die Durchschlagsfestigkeit nicht zwangsläufig unter einen akzeptablen oder vorgeschriebenen Stand.

Aussehen der Probe

Nur erfahrene Bediener können vom Aussehen eines Isolieröls auf dessen Zustand schließen. Als generelle Anhaltspunkte können jedoch die folgenden Richtlinien dienen:

1. Ein trübes Aussehen läßt auf Schlammbildung schließen.
2. Eine dunkelgelbe Färbung kann auf Überhitzung zurückzuführen sein.
3. Eine schwärzliche Färbung wird oft dadurch verursacht, daß sich ein Lichtbogen gebildet hat und entweder das Öl oder die Isolierung des Gerätes karbonisiert ist.
4. Eine grüne Färbung weist auf im Öl gelöste Kupfersalze hin.

Sauberkeit des Instruments

Es kann nicht genug betont werden, wie wichtig es ist, beim Betrieb des Geräts und während der Probenentnahme auf peinlichste Sauberkeit zu achten. Welche Durchschlagsfestigkeit bei der Probe gemessen wird, hängt genauso von der Sauberkeit der Prüfzelle und des Probengeräts wie vom Zustand des Öls selber ab.

Das Gerät darf nach der Reinigung auf keinen Fall mit einem staubigen oder fusseligen Tuch abgewischt, getrocknet oder auch nur angefaßt werden, da loser Staub oder Fusseln leicht zu Verunreinigungen führen.

Vorsichtsmaßnahmen bei der Probenentnahme

Wenn das Öl über einen Ablaßhahn gewonnen wird, enthält es unweigerlich zu viele abgelagerte Verunreinigungen und ist u. U. für das übrige Öl nicht repräsentativ. Das Öl sollte daher so lange abfließen, bis es klar wird.

Für eine erste Überprüfung des Aussehens sollte ein Teil des Öls stets in einer Glasflasche oder einem Reagenzglas aufgefangen werden. Auf diese Weise wird eine unnötige Verunreinigung sauberer Prüfgefäße vermieden.

Wenn nötig, muß die Prüfspitze mit einem geeigneten Lösungsmittel gereinigt und anschließend mit einem fusselfreien Tuch getrocknet werden. Ablaßhahn öffnen und soviel Öl ablaufen lassen, daß der Hahn vollständig gespült wird und die Probe für das übrige Öl repräsentativ ist. Wieviel Öl abgelassen werden muß, hängt von der Größe des Transformators oder Hauptbehälters ab. In der Regel sind etwa 2 Liter ausreichend.

Bei der Entnahme von Proben von einem Faß oder Versorgungsbehälter sollte das Öl mit gleichmäßiger Geschwindigkeit in das Prüfgefäß fließen. Anschließend wird das Öl um die Seiten des Gefäßes geschwenkt und fortgeschüttet. Ohne Veränderung der Fließgeschwindgkeit wird dann die für die Prüfung erforderliche Menge entnommen, wobei das Eindringen von Staub, Tuchfasern oder Feuchtigkeit unbedingt zu vermeiden sind. Siebe dürfen nicht verwendet werden. Wenn kein geeignetes Probenstück vorhanden ist, kann ein Pegelstab benutzt werden.

Die Probe muß bis zur Prüfung lichtgeschützt aufbewahrt werden.

Beim Ausgießen des Öls sind Erschütterungen oder Luftblasen zu vermeiden und die jeweiligen nationalen Bestimmungen einzuhalten.

Bei einer Probenentnahme aus Lieferungen von Tankfahrzeugen und bei allen anderen Gelegenheiten, bei denen eine hohe Durchschlagsfestigkeit zu erwarten ist, muß mit besonderer Sorgfalt vorgegangen und das oben beschriebene Verfahren genau eingehalten werden.

AVO INTERNATIONAL

Archcliffe Road
Dover, Kent
CT17 9EN
England.

Tel: +44 (0) 1304 502100
Fax: +44 (0) 1304 207342

4271 Bronze Way
Dallas
TX 75237-1017
U.S.A.

Tel: +1 (800) 723-2861 (U.S.A. only)
Tel: +1 (214) 330-3203 (International)
Fax: +1 (214) 337-3038

PO Box 9007
Valley Forge
PA 19484-9007
U.S.A.

Tel: +1 (610) 676-8500
Fax: +1 (610) 676-8610

MEGGER SARL
29 Allée de Villemomble
93340, Le Raincy
Paris
France

Tel: +33 (1) 43.02.37.54
Fax: +33 (1) 43.02.16.24

This Test Set is manufactured in the United Kingdom.
The company reserves the right to change the specification or design without prior notice.
FOSTER is a Trade Mark, and ***MEGGER*** is a registered Trade Mark of **AVO INTERNATIONAL LIMITED.**
Copyright ©, **AVO INTERNATIONAL LIMITED.**

Part No. 6171-585 - Edition 10 - Printed in England - 02HH

5kV Digital Insulation Tester
MEGGER® S1-5005

MEGGER®

User Guide
Guide de l'utilisateur
Gebrauchsanleitung
Guía del usuario

SAFETY WARNINGS

- **Safety Warnings** and **Testing Precautions** must be read and understood before the instrument is used.

  They must be observed during use

- The circuit under test **must** be switched off, de-energised and isolated **before** test connections are made.
- The **S1-5005** can generate up to **5 mA at 5000 V**. Circuit connections **must not** be touched when HV is selected.
- Circuits **must be** discharged before disconnecting the test leads.
- In certain circumstances, break-down of the circuit under test could cause the instrument to terminate the test, possibly causing a loss of display while the circuit remains energised. In this event, it is important that the circuit is allowed to discharge and the instrument is turned off **before** touching any connections.
- The test terminal area and charging panel recess should be kept in a dry, clean condition.
- Replacement fuses **must** be of the correct type and rating.
- The instrument should **not** be used if any part of it is damaged.
- Refer to **Testing Precautions** on page 8 for further explanations and precautions.

NOTE

THE INSTRUMENT MUST ONLY BE USED BY SUITABLY TRAINED AND COMPETENT PERSONS.

Contents

Guide de l'utilisateur - p30 **Gebrauchsanleitung - s50** **Guía del usuario - p70**

Safety Warnings 2
General Description 4
Test Mode Summary 5
Features and Controls 6
Battery Charging 7
Operation
Testing Precautions 8
Performing Tests - General 9
Testing procedures 10
Insulation Resistance Testing (**R**) 10
Test Current measurement (**I**) 10
Polarization Index Testing (**PI**) 10
Dielectric Discharge Testing (**DD**) 11
Step Voltage Testing (**SV**) 11
Factory settings 12
Custom timed **PI** test 12
Custom timed **DD** test 12
Setting Custom Test Time values 12
Using the Guard Terminal 13
Measurements above 100 G 13
Fault Conditioning (BURN) 14
Condition and Warning Indicators 15
Data Download 16
Application Notes
Preventive Maintenance 17
Insulation Testing Concepts 18
Application of Test Techniques
Short time or Spot Test 19
Polarization Index (**PI**) Test 19
Dielectric Discharge (**DD**) Test 20
Stress considerations 21
Specification 22
Accessories 25
Appendix 1 - Results displayed at the end of each test 26
Appendix 2 - RS 232 Output information display examples 28
Repair and Warranty 29

Symbols used on the instrument

Caution: Refer to accompanying notes.

Risk of electric shock.

Equipment complies with relevant EU Directives

Equipment protected throughout by Double Insulation (Class II).

General Description

The ***S1-5005*** is a compact, automated high voltage, battery powered instrument used to carry out Polarization Index, Step Voltage, and Dielectric Discharge tests as well as spot Insulation tests. The ***S1-5005*** has a resistance measurement capability up to 5 TΩ and leakage current measurement enables resistances up to 500 TΩ to be measured.

The design of the instrument takes full advantage of microprocessor technology and features a large, clear liquid crystal display, combining digital and analogue readings of insulation resistance.

Set nominal voltage options of 500 V, 1000 V, 2500 V and 5000 V are selectable. A variable output voltage setting provides a range of 25 V to 5000 V incremental in 25 V steps.

At switch on, the instrument carries out a calibration self check which automatically adjusts the measurement system. The calibration sequence inhibits any testing if the measurement system fails to meet preset limits.

On starting a test, the HV warning LED on the front of the instrument flashes, together with the display HV warning symbols. The integral timer starts automatically and displays minutes and seconds elapsed since the start of the test. The timer can be used to set the duration of a test, and will automatically stop the output voltage when the set time has expired.

During a test, measurements are automatically sent every 5 seconds via an isolated optical link to the RS 232 connector to enable downloading of the results to a computer.

Battery capacity is continuously displayed by a segmented indicator. The indicator flashes when the battery requires recharging. Power is obtained from two parallel connected sealed rechargeable lead acid batteries. If either battery fails (or an internal protection fuse ruptures) the instrument will continue to operate on the alternative battery. The battery is recharged by external 95 - 265V a.c., 50-60 Hz, or 12 V d.c.supply.

Charging connections, mains power indicator and instrument protection fuses are located in a splashproof protected recess in the front panel.

Specially designed lid hinges enable the lid to be removed and replaced as required, and will protect the lid from strain or damage by unclipping itself if unintentionally opened past its full extent.

Design safety features include:-

- The flashing HV warning LED on the front of the instrument , and the flashing H.V. symbols on the display remind the user that hazardous voltage is present when testing.
- External voltage **>50 V** displayed with flashing H.V. symbols on the display.
- Load automatically discharged at the end of a test, and decaying voltage (> 50 V) displayed.
- Interlocked sliding cover to prevent simultaneous access of charging and test terminals.
- Test terminal sockets lock test leads into the case and prevent accidental disconnection.

Test Mode Summary

Insulation Resistance Testing (R)
This mode measures insulation resistance at the selected voltage to provide an instantaneous spot reading. Final test result is given sequentially with the corresponding leakage current and capacitance value.

Test Current measurement (I)
This mode measures insulation at the selected voltage to provide an instantaneous spot reading, but displays leakage current value on the digital display. (N.B. The analogue scale always displays resistance). Final test result is given sequentially with the corresponding resistance and capacitance value.

Polarization Index Testing (PI)
Polarization Index is the term applied to the Dielectric Absorption ratio, when the insulator is subjected to an insulation resistance test, and the resistance values are measured after time **T1** (Default **1 minute**) and again after time **T2** (Default **10 minutes**). Polarization Index is calculated automatically from the resistance value after time **T2**, divided by the resistance value after time **T1**. High dielectric absorption is indicated by high **PI** ratio (see '**Application of test Techniques**'). Final test results are given sequentially with the corresponding leakage current and capacitance value. The test will run at any voltage. Custom timed **PI** values can be set if required (see '**Custom timed PI test**').

Dielectric Discharge Testing (DD)
This mode measures the dielectric absorption of an item under test while ignoring the effects of parallel surface leakage paths. Default test time is 30 minutes followed by 1 minute discharge. Final test results are given sequentially with a PI value, the final resistance value, and capacitance value. Custom timed **DD** values can be set if required (see '**Custom timed DD test**').

Step Voltage Testing (SV)
This 5 minute test depends on the principle that an ideal insulator will produce identical resistance readings at all voltages. Conversely, an insulator which is being over stressed will show lower values at higher voltages. Operating at either 2,5 kV or 5 kV, the voltage steps up one fifth every minute, and successive measurements are taken. On completion, each of the 5 separate results are sequentially displayed followed by the capacitance value.

Fault Conditioning (Burn)
This low current feature is used to carry out continuous testing under breakdown conditions.

General Notes:
1) A capacitance value reading is only available if the test has run for more than one minute, and the reading was not over-range.

2) Internal discharge resistors are automatically selected :-

- At the end of a test.
- If the instrument is switched off.
- If an internal error is detected.

Any voltage remaining on the terminals at the end of a test,will be displayed until it has decayed to less than 50 V. During a test output terminal voltage is displayed, together with flashing high voltage symbols, and the flashing red LED.

Features and Controls

Splashproof recess Cover
Slides back to reveal mains and 12V battery charging connections together with instrument protection fuses.

Voltage display
Test voltage or external voltage >50V, together with flashing H.V. symbols.

Display left hand cursor
Indicates selected voltage, or the timer.

Timer display - Shows set test duration and displays time elapsing during test.

HV Warning - Flashes when a test is in progress, or a hazardous voltage is present.

On/Off Button
Press to turn On /Off. (Wait a few seconds for Automatic Calibration)

Selector Keys
1) Set voltage
2) Set Timer

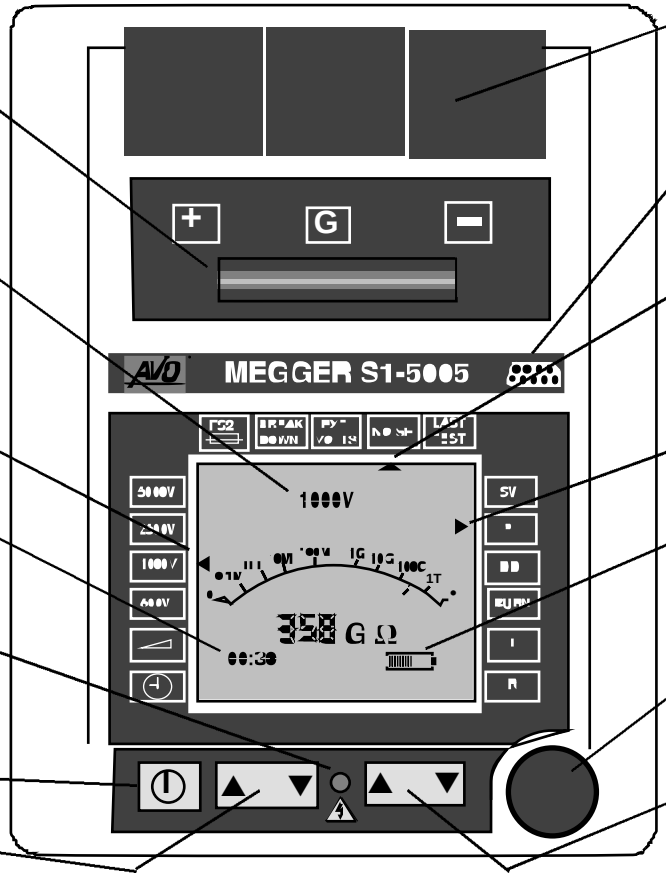

Terminal Connection covers
Individually lifted to access test lead terminals. Covers interlocked with sliding recess cover.

RS232C socket
Sends test results every 5 secs to enable download to PC.

Condition and Warning indicators
Flash to indicate any adverse conditions affecting the test. Also indicates when results of last test are being sequentially displayed.

Display right hand cursor
Indicates selected Test mode.

Battery capacity Indicator
Segments recede as battery is used. Symbol flashes when battery charge is excessively low.

Test Push
Press for at least 1 second to initiate test and start Timer.
Press again to manually stop test.

Range Keys
1) Select test mode.
2) Adjust variable voltage.
3) Set timer. Max. 90 minutes.

Battery Charging

General
It is advisable to fully charge the battery before the instrument is put into service for the first time. Charging is carried out by external a.c. mains supply, or by 12 V d.c. supply. A 12 V charging lead fitted with an automotive cigar lighter plug is available for charging the battery from a vehicle.Testing is inhibited during charging.

Mains supply re-charging
Mains input recharging requires a voltage within the range 95 - 265 V a.c., 50 - 60 Hz. Disconnect the test leads and connect the mains supply to the IEC 320 connector in the charging recess. Confirm that the red indicator lamp is illuminated. Charging is automatic as soon as the mains supply is connected. To fully recharge the battery takes about 16 hours. Eight hours charging (from a fully discharged state) will achieve at least 90% of full charge. Turn the instrument on and check the battery capacity indicator to show the state of charge.

12 V d.c. supply re-charging
This method of re-charging should only be carried out if a mains supply is unavailable as it is slower and less efficient. If using a vehicle as the charging source, the engine should be running. Observing correct polarities shown, connect the 12 V DIN socket to the external 12 V d.c. supply and switch on.
Caution: Applying more than 15 V to this socket will overcharge the battery.

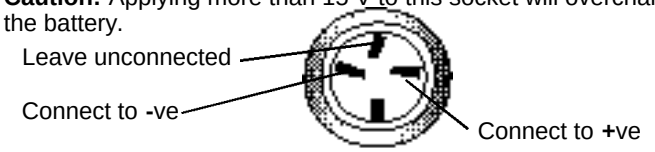

12 V DIN socket (Viewed from front of panel).

Battery Charging Notes

1) **Do not** leave battery in a totally discharged state. Frequent charging to keep the battery 'topped up' will maximise battery life.

2) Battery charging should be carried out in a dry environment (the IP54 environmental protection applies with the charging cover securely closed).

3) When charging the battery indoors, the area should be well ventilated.

4) The battery should only be charged at temperatures in the range 0 °C to 40 °C.

5) It is beneficial to continue charging and no harm will occur to the battery if the charger is left on indefinitely.

6) If the instrument is idle for long periods, recharge the battery for at least 24 hours every 6 months. (More frequently if the storage temperature is >40 °C).

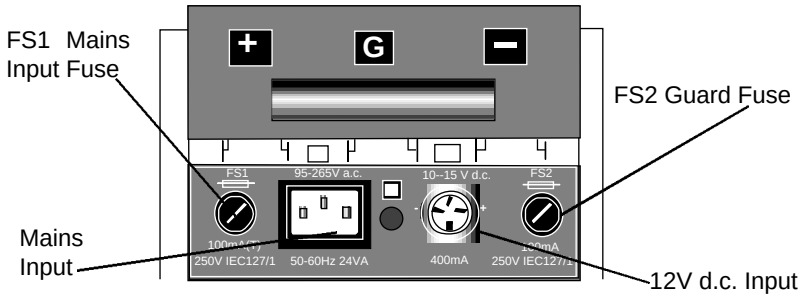

Operation

Testing Precautions

⚠ The circuit under test **must** be completely de-energized and isolated **before** test connections are made.

1. The instrument must only be used by suitably trained and competent persons.
2. Circuit connections **must not** be touched during a test.
3. The ***S1-5005*** can give an electric shock. Highly capacitive circuits (e.g. long lengths of cable) charged to several kV can create a potentially lethal charge.
4. Care must be taken to prevent capacitive circuits becoming disconnected during a test, leaving the circuit in a charged state.
5. The voltmeter and automatic discharge feature of the ***S1-5005*** should be regarded as additional safety features and **not** a substitute for normal safe working practice.
6. When carrying out prolonged tests unattended, care should be taken that no harm or damage can be caused.
7. When using the '**BURN**' feature, care should be taken that no harm or significant damage can be caused.
8. In certain circumstances, break-down of the circuit under test may conceivably cause the instrument to terminate the test, possibly causing a loss of display **while the circuit remains energised.** In this event, the circuit **must** be discharged and the instrument turned off **before** touching any connections.
9. The ***S1-5005*** has an environmental protection classification of IP54 with the charging recess cover securely closed. It is important from a safety point of view (and to avoid unwanted leakage currents) to ensure that the testing terminal area and the charging recess are kept free from dirt and moisture.
10. Before use, any surface water on the instrument **must** be removed, especially from the test lead sockets
11. Fuse replacements **must** be of the correct type and rating. Refer to the Specification section for correct replacement fuse details.
12. If any part of the instrument is damaged, it should **not** be used, but returned to the manufacturer or an approved repair company.
13. Should the plug on the power cord not be the type for your socket outlets (receptacles), do not use an adaptor. Use a suitable alternative mains cord. Wires in power cords are coloured as follows:

	U.K/International	U.S.A.
Earth (Ground)	Yellow/Green	Green
Neutral	Blue	White
Phase (Line)	Brown	Black

Performing Tests - General

1. Switch the ***S1-5005*** On by pressing the 'On/Off' switch once. All LCD segments appear for 5 seconds, then the word **'CAL**' appears for about 5 seconds. When the word '**CAL**' disappears, the instrument is ready for use, and in standby mode.

Note: When not testing (i.e. in standby mode) the ***S1-5005*** acts as a voltmeter. (50 V to 1000 V).

2. Ensure that all test leads are clean and in good condition, and connect them to the **isolated** circuit under test.
   If an external voltage >50 V is detected the voltage is displayed together with high voltage symbols.

3. Select the required test mode using the Range keys to move the right hand cursor.

4. Unless accepting a default test time, use the Selector keys to move the left hand cursor to the timer position and increment to the desired test duration using the Range keys. (Maximum test time is 90 minutes).

5. Use the Selector keys again to set the required test voltage. The variable voltage position gives the option to select a non-standard voltage between 25 and 5000 V d.c., or to continuously vary the voltage in 25 V steps during a test. To select, move the left hand cursor to the variable voltage position and adjust the output terminal voltage using the Range keys. The voltage set is shown at the top of the display. When set to variable voltage, the test mode cannot be altered.

Note: Changing the voltage during a test will temporarily alter the reading. A steady reading will appear when the new voltage has been stable over a full sample period (typically 5 seconds).

6. Start a test by pressing the red test button for at least 1 second. The flashing red LED and the flashing H.V. symbols warn that a test is in progress.

7. When testing resistive or moderately capacitive loads (up to about 1µF) the test voltage will appear within a few seconds. The test voltage is controlled to within 5% of nominal, adjusting itself for changes in resistance. The actual output voltage is displayed during tests. On large capacitive items the voltage rise will be noticeably slower and on low resistances (less than 10 MΩ) the voltage may never rise to its nominal value.

8. Insulation resistance readings are updated once every second for measurements up to about 100 MΩ. For measurements between 1 GΩ and infinity the sample frequency rate will slow to 15 seconds.

9. A test can be manually aborted at any time by pressing the red test button. A test will automatically terminate if:
   - The set test duration is reached.
   - The insulation under test suffers a complete breakdown.
   - Excessive electrical noise interference (>2 mA at 5 kV).
   - The battery becomes exhausted
   - Fuse FS2 ruptures.
   - An internal fault occurs.

When the test is terminated the item under test will be automatically discharged.

10. To switch the instrument Off, press the On/Off button once. Auto switch-off operates after 10 minutes inactivity in '**R'** '**I**' and '**Burn**' modes, and after 30 minutes inactivity in '**DD'**, '**PI'** and '**SV'** modes.

Operation

Testing Procedures

Insulation Resistance Testing (R)
This test mode measures insulation resistance continuously at the selected voltage. The highest digital readings obtainable are 500 GΩ at 500 V and 5 TΩ at 5000 V, above which the specified accuracy can be expected to decline. However, the analogue indicator display functions to 1TΩ at all voltages.

1. Using the ▲▼ Range keys move the right hand cursor to '**R**'.
2. Accept the default time of 30 minutes, or using the ▲▼ Selector keys move the left hand cursor to the ⏱ position and then set the test duration using the ▲ ▼ Range keys.Maximum test time is 90 minutes.
3. Using the ▲▼ Selector keys move the left hand cursor to the required test voltage.
4. Start the test by pressing the red test button for at least one second.
5. On completion, the final resistance measurement is displayed sequentially with the corresponding leakage current and the capacitance value, where available. This sequential display repeats until a key is pressed or Auto switch-off operates. For more details of final display information see **Appendix 1**.

Test Current measurement (I)
This test mode measures insulation continuously at the selected voltage, but displays leakage current value instead of resistance. This enables even higher resistances to be calculated. Using this method it is theoretically possible to measure resistance up to 500 TΩ at 5000 V but it will be necessary to perform an open circuit calibration test to establish measurement circuit offset current and test lead leakage. (This is ±0,2 nA at normal temperatures with new, clean test leads).

1. Using the ▲▼ Range keys move the right hand cursor to '**I**', and follow the same procedure as for Insulation Test '**R**'.
2. On completion, the final current leakage measurement is displayed sequentially with the resistance and the capacitance value, where available. This sequential display repeats until a key is pressed or Auto switch-off operates. For more details of final display information see **Appendix 1**.

Polarization Index Testing (PI)
Polarization Index is the term applied to the Dielectric Absorption ratio, when the insulator is subjected to an insulation resistance test, and the resistance values are measured after time **T1** (Default 1 minute) and again after time **T2** (Default 10 minutes). The test will run at any voltage. Polarization Index is therefore the resistance value after time **T2** divided by the resistance value after time **T1**.

1. Using the ▲▼ Range keys move the right hand cursor to **PI**.
2. Using the ▲▼ Selector keys move the left hand cursor to the required test voltage.
3. Start the test by pressing the red test button for at least one second.
4. On completion, the **PI** ratio is displayed sequentially followed
   by the corresponding 1 minute and 10 minute resistance values, and where available, the capacitance value. In lieu

of a custom timed **T3** value, the display will show **- - -** . This sequential display repeats until a key is pressed or Auto switch-off operates. For more details of final display information see **Appendix 1**. For more detailed information on **PI** ratio assessment, see '**Application of Test Techniques**'.

Dielectric Discharge Testing (DD)

This test measures the dielectric absorption of an insulator and gives an indication of the amount of absorbed dirt and moisture. Default settings are **500 V** and **30 minutes** but these may be changed as required. The default settings will reset if the cursor is moved away from the '**DD**' position. The insulator under test is charged at 500 V for 30 minutes (to attain a stable condition). A quick discharge then follows, during which the capacitance is measured. The remaining current flow is then measured after 1 minute, and the '**DD**' value calculated from the formula:

$$\frac{\text{Current after 1 minute (mA)}}{\text{Test Voltage (V)} \times \text{Capacitance (F)}}$$

1. Using the ▲ ▼ Range keys move the right hand cursor to '**DD**'.

2. Accept the default time of 30 minutes, or using the ▲ ▼ Selector keys move the left hand cursor to the position and then set the test duration using the ▲ ▼ Range keys. Maximum test time is 90 minutes.

3. Accept the default voltage of 500 V, or using the ▲ ▼ Selector keys move the left hand cursor to the required test voltage.

4. Start the test by pressing the red test button for at least one second.

5. On completion, the '**DD**' value is displayed sequentially with the corresponding insulation resistance, the PI ratio and the capacitance value. This sequential display repeats until a key is pressed or Auto switch-of operates. For more details of final display information see **Appendix 1**. For more detailed information on '**DD**' value assessment, see '**Application of Test Techniques**'.

Step Voltage Testing (SV)

This test is based on the principle that an ideal insulator will produce identical resistance readings at all voltages while an insulator which is being over stressed will show lower values at higher voltages. Operating at either 2,5 kV or 5 kV, the voltage steps up one fifth every minute for 5 minutes, and successive measurements are taken.

1. Using the ▲ ▼ Range keys move the right hand cursor to '**SV**'.

2. Accept the default test time of 5 minutes.

3. Accept the default voltage of 2500 V, or using the ▲ ▼ Selector keys move the left hand cursor to the 5000 V position.

4. Start the test by pressing the red test button for at least one second.

5. On completion, each of the 5 separate results are sequentially displayed followed by the capacitance value, where available. This sequential display repeats until a key is pressed or Auto switch-off operates. For more details of final display information see **Appendix 1**.

Operation

Factory settings
The following table shows these test times as they are set on a new instrument, for each of the Test modes. Note that the **T1** and the **T2** test times set for the **PI** test are used to calculate a **PI** result when carrying out a **DD** test.

Test Mode	T1	T2	T3
SV	-	-	5 min (fixed)
PI	1 min	10 min	10 min
DD	Same as **PI**	Same as **PI**	30 min
BURN - IR	-	-	30 min

Custom timed PI test
When new, the ***S1-5005*** is set up with **PI** ratio is calculated on the time settings of **1 minute** (**T1**) and the **10 minute** (**T2**) values. Time setting **T3** is also set at **10 minutes**. These settings can be adjusted from 15 seconds to 90 minutes. This original setup produces one **PI** result, based on the ratio of **T1** and **T2**. **T3** is the total test time (initially 10 minutes for the test time). By adjusting **T3**, two separate **PI** ratio values can be calculated. The first **PI** ratio is based upon the measurements of the **T1** and the **T2** values. The second result is calculated on the time settings of **T2** and **T3**. Note that if **T2** is equal to **T3**, only one result will be calculated.

Custom timed DD test
The **DD** test can be customised in the same way as the PI test. Initially **T1** = **1 minute**, **T2** = **10 minutes**, **T3** = **30 minutes**. This gives a **PI** ratio based on **T2 / T1**, in addition to the **DD** value.

Setting Custom Test Time values
1. Using the right hand ▲ ▼ Range keys, select the desired test mode.
2. Using the left hand ▲ ▼Selector keys, select .
3. Adjust time **T3** using the right hand ▲ ▼ range keys. On completion, press the left hand ▼ selector key. Time **T2** is displayed as **- - 2**.
4. Adjust **T2** using the right hand ▲ ▼ range keys. On completion, press the left hand ▼ selector key. Time **T1** is displayed as **- - 1**.

Note:-

- These times can be adjusted in any order, but **T1** must be shortest, and **T3** must be longest.
- The values set for **T1** and **T2** will apply to both **PI** and **DD** test.
- **T3** Values are independent for **PI** and **DD** tests.
- The new test times are retained when the instrument is switched Off.
- If any two values are the same, the **PI** result is not calculated, and the result displayed as **- - -**.

End of test Results display
After time **T3** is displayed, the test stops and the total test results displayed in a constantly repeating sequence. For details of display information, see **Appendix 1**.

Using the Guard terminal

For basic insulation tests and where there is little possibility of surface leakage affecting the measurement, it is unnecessary to use the guard terminal. i.e. if the insulator is clean and there are unlikely to be any adverse current paths.
However in cable testing, there may be surface leakage paths across the insulation between the bare cable and the external sheathing due to the presence of moisture or dirt. Where it is required to remove the effect of this leakage, particularly at high testing voltages, a bare wire may be bound tightly around the insulation and connected via the third test lead to the guard terminal '**G**'.

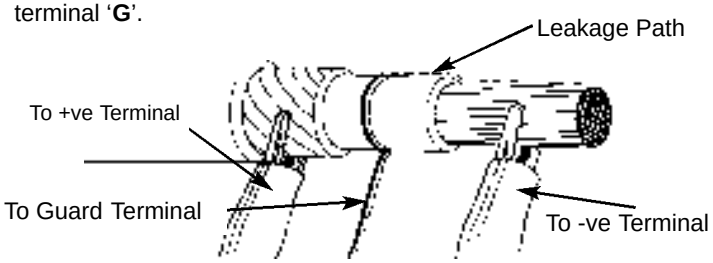

The guard terminal is at the same potential as the negative terminal. Since the leakage resistance is effectively in parallel with the resistance to be measured, the use of the guard causes the current flowing through surface leakage to be diverted from the measuring circuit. The instrument therefore reads the leakage of the insulator, ignoring leakage across its surface.

Measurements above 100 GΩ

Measurements up to 100 GΩ can be made without any special precautions, assuming that the test leads are reasonably clean and dry. The guard lead can be used to remove the effects of surface leakage if necessary. The ***S1-5005*** is capable of measuring up to 5 TΩ, and down to 0,01 nA(equivalent to 500 TΩ at 5000 V). When measuring resistances this high, the test leads should not be allowed to touch each other or any other object since this may introduce leakage paths. Sharp points at the test lead connections should also be avoided since this will encourage corona discharge. For further information see '**Stress considerations**'.

Fault Conditioning (BURN)

Burn mode disables the 'Breakdown' detector and warning indicator and therefore allows continuous testing under breakdown conditions with a **5 mA** (nominal) current.

1. Using the ▲▼ Range keys move the right hand cursor to **'BURN**'.
2. Using the ▲▼ Selector keys move the left hand cursor to the required test voltage.
3. Start the test by pressing the red test button for at least one second.
4. At the end of a test, if complete breakdown does not occur the final measured value is displayed sequentially with the corresponding leakage current and capacitance value. This sequential display repeats until a key is pressed or Auto switch-off operates.

⚠ **Note:** In this mode, break-down of the circuit and the related noise interference may cause the instrument to terminate the operation, possibly causing a loss of display **while the circuit remains energised**. In this event, it is important that the circuit

Operation

is allowed to discharge **before** touching any connections. If necessary, switch the instrument off, and then on again to reset the display.

Condition and Warning Indicators

FS2
Fuse (**FS2**) located in the charger recess protects the low impedance guard circuit against the application of external voltage. Guard fuse failure will be indicated on the display only when the guard circuit is in use. To check whether the fuse has ruptured, connect the positive terminal to the guard terminal and start a 500 V test. If the '**FS2**' display cursor flashes, the fuse has ruptured. If the cursor flashes when the guard lead is not connected, it indicates failure of one of the batteries or a battery fuse (which is not externally accessible). The instrument will operate in this condition, but the operating time between charges will be reduced; capacitance readings will not be displayed, and no warning will be given if the guard fuse subsequently ruptures.

BREAKDOWN
If a breakdown occurs between the test leads, the test will terminate and the '**BREAKDOWN**' cursor will flash. Selecting '**BURN**' mode disables the '**BREAKDOWN**' warning indicator.

⚠ **EXT VOLTS**
A flashing cursor below the '**EXT VOLTS**' label combined with the flashing LED on the front of the instrument, and the flashing high voltage symbols indicates that the voltmeter is reading a hazardous voltage which originates from an external source. The voltmeter will show d.c. voltage of either polarity, or a.c. voltage.

NOISE
If external interference (normally 50 Hz or 60 Hz hum current) is excessive (>2 mA at 5 kV), testing will terminate and the flashing cursor below the '**NOISE**' label will be displayed.

LAST TEST
This cursor flashes on completion of a test in conjunction with the repetitive sequence of final readings.

Error Numbers
Internal faults and errors will cause the display to show **'E'** followed by a number. While these error numbers are designed to aid internal fault diagnosis, they can also be triggered by extreme cases of electromagnetic interference. Error numbers **E5** and **E11** indicate that a negative current has been measured.

Calibration Errors
At switch-on, the calibration check automatically adjusts the measurement system against an internal voltage and resistor. The calibration sequence will not finish unless the measurement system is giving consistent results within preset limits. If the startup screen does not progress beyond the segment check or stops with '**CAL**' displayed, calibration has failed.

Data Download

RS 232 socket
The RS232 socket is optically isolated from all other circuits within the ***S1-5005.*** It is therefore safe to connect a computer to this socket while tests are being performed. Removal of the plastic dust cover to expose the RS 232 socket will not impair the IP54 rating of the instrument, but replacing the cover after use will reduce the possibility of contact pin corrosion. Test results are sent to the RS 232 socket every 5 seconds. The Baud rate is 9600, and the format of the output data is comma delimited ASCII. The **BM25 DOWNLOAD** program as supplied with your instrument is suitable for receiving this data.

Installing the Program
The process of installing the **BM25 DOWNLOAD** program onto the hard disk of your PC only takes place once. You will only have to repeat it if you wish to transfer your copy of the program to another computer. The program will run using DOS Version 3.2 or later versions, and requires a minimum of 1 MB of memory. Most modern PCs will meet this criteria. With the diskette in the disk drive, at the DOS **C:\>** prompt type:

A:Install A: C: <press ENTER>

This creates a directory called ***BM25*** on your hard disk and copies the program from the diskette in your drive to that directory. If you want to use a disk drive other than A, use the letter of the drive you are using instead of **A**.

Connecting the Instrument to a PC
Connect one end of the 9 way cable to the RS 232 plug on the face of the instrument, and the other end to a serial (**COM**) port on the PC. Note which PC port you have selected.

Running the Program
In order to run, the software will require the command words **BM25LOAD** followed by 2 parameters. These parameters are:

The PC COM port identification. (**0 to 4**)

Data to be saved in a Spreadsheet file format or not.
1 = spreadsheet (.wks) **0** = No spreadsheet file.

For example if you are using number 1 port of the PC, the first number following the command word **BM25LOAD** would be **1** (preceded by a space).

If you want to save the measurement data in Spreadsheet format, the second number following the command word **BM25LOAD** would be **1** (again preceded by a space). If not, the number would be **0**.
e.g. type: **BM25Load 1 1** (note parameter spacing).

The program should be run before the ***S1-5005*** is switched on.

To start the program from the **C:** prompt,

1. Type **CD\BM25** press <ENTER> The cursor prompt changes to:**C:\BM25**

2. Type in the command words **BM25Load** followed by <space> **parameter** <space> **parameter**.

3. When the software is running, the screen colour changes to blue and a file path screen will appear. If the spread sheet file format has not been selected, only one file name will

Data Download

appear. Every time the program is run, the Name and path will default to **C:\BM25\loaded.dat**. A new file path name may be entered by overtyping the default. Use the ≠ keys to move to the next entry. If Spreadsheet file format (**1**) was selected, the default filename **loaded** may be changed by overtyping. Ensure that **.wks** is not removed or altered.

4. On completion press <ENTER> to move on to the download window.

5. The ***S1-5005*** can now be switched on by pressing the 'On/Off' switch once. At the end of the calibration check, the software version will appear in the down-load window.

Note: If the instrument is not identified after the calibration period, an error has occurred. Switch the instrument off, stop the software program and check the 9 way lead connections. Restart the software, making sure that the correct port has been entered at the command prompt.

6. Set the required test settings and duration on the ***S1-5005***. A test of 90 minutes duration will create a data file of approximately 43 KB. The standard data file has room for approximately nine 10 minute tests.

7. To start a test and begin downloading, press the red start button for at least 1 second. Text identifying the test settings will be displayed (Resistance in M) followed by the measured results at 5 second intervals.

8. On full completion of a test, the word 'Finished' will be displayed, together with the measured data in scientific notation.
   e.g. 5,108e+04 = 5,108 M x 10^4 = 51,08 G

Note: Downloaded data usually contains more significant figures than the 'rounded' result displayed on the instrument.

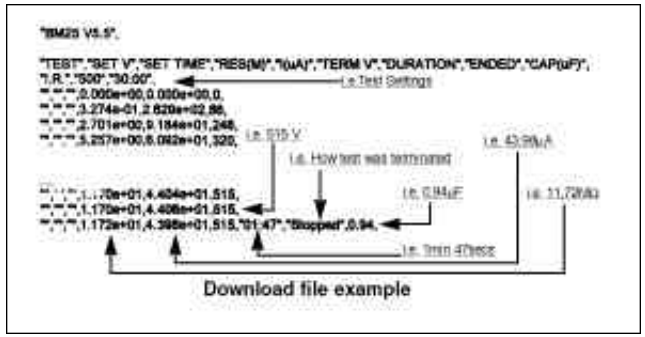

Download file example

9. At the end of a download, one or two files will have been created in the default or specified path location. These files can then be imported into a variety of databases, spreadsheets or graph software packages. See **Appendix 2**.

Note: A test can be stopped and started at any point without affecting the download data. If a test is terminated before its set duration, pressing '**Esc**' will convert the existing data for that test.

Application Notes

Preventive Maintenance

The proverb 'A stitch in time saves nine' inspired the title of an **AVO International** booklet on insulation testing, as it neatly sums up the benefits of preventative maintenance. The savings come in financial terms from costly repairs, lost production, lost profits and in human terms, from lives saved in the event of dangerous electrical faults.

Regular insulation testing of electrical equipment can help to detect deteriorating insulation. The effects which cause insulation to deteriorate include mechanical damage, vibration, excessive heat or cold, dirt, oil, moisture and localized voltage stresses - all of which can arise on most industrial or utility equipment.
Insulation tests are sometimes used in isolation as absolute measures of the **quality** of the insulation. This is most appropriate when equipment is being installed and checked for compliance with a specified 'Pass' level. For operational equipment the key factors are **trends** in the insulation readings.

It is therefore important that records of insulation readings are kept, relating to each piece of equipment or 'Asset' in your testing regime. **AVO** supplies test record cards to assist with such record keeping, and now with the ***S1-5005***, the results can be downloaded directly to a computer.
There are also a number of influences on the insulation readings - temperature, humidity and surface leakage for example and a range of test techniques have been developed to help with the interpretation of your insulation tests.

A number of these techniques have been automated on the ***S1-5005*** to make better use of your time and information. To help you get the most from your ***S1-5005*** we have included two short sections; firstly covering Insulation Testing Concepts, then looking at the application of the different test techniques.

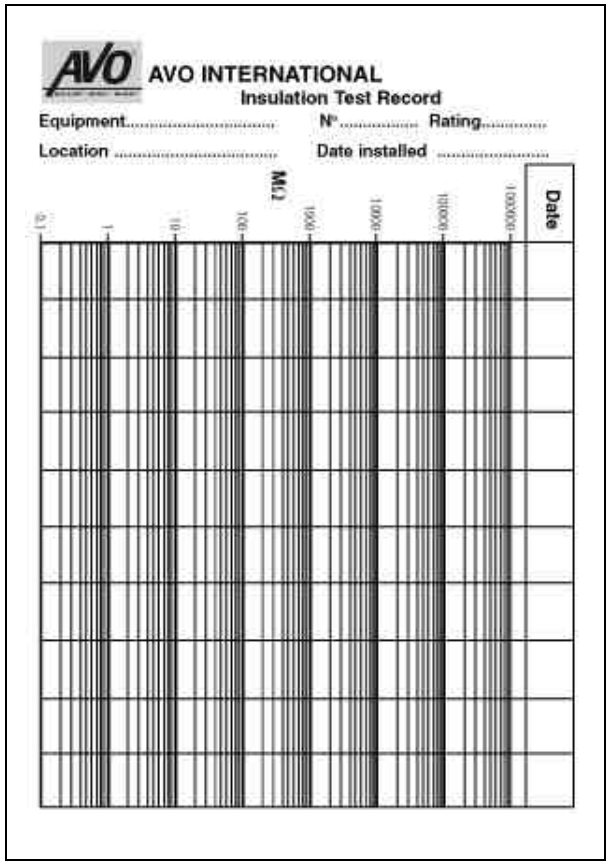

Test Record Example

Application Notes

Insulation Testing Concepts
Insulation resistance can be considered by applying Ohm's Law. The measured resistance is determined from the applied voltage divided by the resultant current, $R = \frac{V}{I}$

There are two further important factors to be considered. These are (i) the nature of the current through and/or over the insulation, and (ii) the length of time for which the test voltage is applied. These two factors are linked. The total current that flows is made up of three separate currents:-

1. Capacitance charging current. This current is initially high and drops as the insulation becomes charged up to the applied voltage.

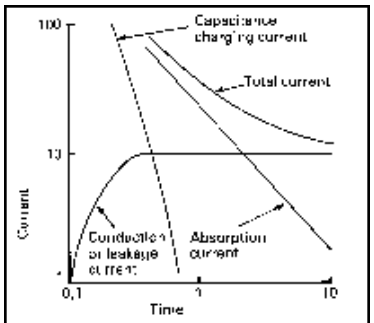

Components of insulation test current

2. Absorption current. This current is also initially high but drops at a much slower rate than the charging current.

3. Conduction or Leakage current.This is a small steady current that can be sub-divided into two:-

   (a) A current flowing along conduction paths **through** the insulation material.
   (b) A current flowing along conduction paths **over the surface** of the insulation material.

As the total current depends upon the time for which the voltage is applied, Ohm's Law theoretically applies at infinite time.

The charging current falls relatively rapidly as the equipment under test becomes charged up. The actual length of time depends upon the size and capacitance of the item under test.

Larger items with more capacitance will take longer e.g. long supply cables. The absorption current decreases relatively slowly compared with the charging current. In essence it depends upon the nature of the insulation material.

The conduction or Leakage current builds up quickly to a steady value and then remains constant for a particular applied voltage under stable conditions. It is this current that is affected by moisture, dirt etc. and the degree to which it flows bears a direct relation to the quality of the insulation, and consequently to the value of the insulation resistance measured. An increase in the leakage current is a pointer to possible future problems.

Application of Test Techniques

Short time or Spot Test
This is the simplest insulation test, giving a reading of insulation resistance in MΩ. The test is applied for a short but specific period of time, immediately after which a reading is taken. The time is typically 30 or 60 seconds and the ***S1-5005*** will allow you to set this time and the test will finish automatically. The reading will not necessarily be the maximum value but if the same time is used each test, then the same point on the curve of increasing apparent resistance is being compared. On installation these readings will be compared to the required minimum specification. Further readings taken for maintenance purposes must be monitored for any trend that they show. The readings are subject to variation from temperature and humidity and these factors may require the insulation reading to be corrected. Information on temperature correction is given in the **AVO** publication '**A Stitch in Time**'. Alternatively, a Polarization Index (**PI**) test may be used.

Polarization Index (PI) Test
This test method is a particular example of the time resistance method. Time resistance tests take successive readings at specified times and are independent of temperature. They can often help in the situation where past test record frequency are limited. Good insulation generally shows an increase in resistance over a 10 minute period.

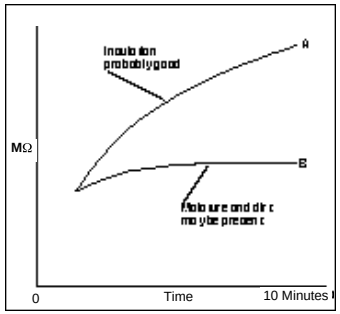

With contaminated insulation, absorption effects are masked by high leakage currents and the readings are therefore fairly flat. The PI test takes the ratio of the values at 10 and 1 minutes - this is the Polarization Index. The PI test also has the advantage of not requiring temperature correction. The value of PI can give a rough guide to condition of insulation, although the figures should always be interpreted in the context of the equipment history and your experience.

PI TEST RESULT	INSULATION CONDITION
<1,0	**Unsatisfactory**
1,0 to 2,0	**Dubious**
2,0 to 4,0	**Good**
>4,0	**Very Good**

There are two specific conditions to be aware of when interpreting PI tests results, particularly if a history of the equipment is unavailable.

1) Dry, brittle insulation (e.g. on windings) on can give a high PI but fail under shock conditions.

2) If multi-layered insulation fails in one of the layers while the others retain high resistances, the effect on the test current will tend to increase the PI value, masking possible problems from surface leakage caused by dirt and contamination.

Application of Test Techniques

Dielectric Discharge (DD)Test

The Dielectric Discharge (**DD**) Test is a diagnostic insulation test that allows ageing and detorioration of insulation to be assessed. The result is dependent on the discharge characteristic, so the internal condition of the insulation is tested, largely independent of any surface contamination. The charge that is stored in the insulation material under test, is measured during the discharge phase.

The charge that is stored during the insulation test is automatically discharged at the end of the test when the discharge resistors are switched across the terminals. The rate of discharge depends only on the discharge resistors and the amount of stored charge from the insulation.

The capacitive current quickly decays from a high value with a relatively short time constant (a few seconds). The absorption (or re-absorption during a discharge) current starts from a lower level but has a much longer time constant (up to several minutes). This is caused by ions and dipoles re-aligning themselves within the insulation. When an electric field is applied some ions are able to move, and some dipoles align themselves within the field. These effects reverse themselves slowly when the test voltage is removed, caused by particles returning to their natural random state.

The DD test measures the discharge currents 1 minute after an insulation test has been completed. At this time the capacitive current has usually become insignificant compared with the re-absorption current. The level of re-absorption after this time shows the condition of the insulation material, providing that the insulation material has been fully charged for full absorption to take place (typically 10 to 30 minutes). A high re-absorption current shows that the insulation has been contaminated, usually by moisture. A low current usually shows that the insulation is clean and has not absorbed much moisture.

The dielectric discharge test measures the discharge current 60 seconds after the insulation test is completed. This is converted to a figure of merit which gives a figure for the quality of the insulation, independent of the test voltage. This value is temperature dependent so it is important to test at a reference temperature, or record the value.

The DD value is defined as:-

$$\frac{\text{Current flowing after 1 minute (mA)}}{\text{Test Voltage (V) x Capacitance (µF)}} = \frac{I_{1min}}{V \times C}$$

The DD result will only be produced if the capacitance is in the range 0,2 µF to 10 µF and reverse measured current does not exceed 10 µA.

The maximum DD value that can be measured (assuming the default test voltage of 500 V) is typically 20, if the capacitance of the test sample is 1µF, but decreasing to 2 for a capacitance of 10 µF. If the maximum value has been exceeded the result will show a '**>**' symbol in front of the number (e.g. ' **>20**').

DD Test Result	Insulation Condition
>7	Bad
>4	Poor
2 - 4	Questionable
<2	O.K.

Stress Considerations

Measurement above 100 GΩ

Figure 1. shows the stresses and subsequent leakages which will occur between the test leads if neither is connected to earth (ground). These leakages have significant effect and occur through the air itself.

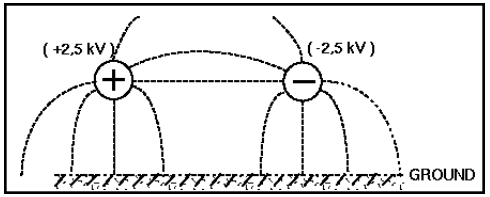

Figure 1.

Figure 2. shows the effect of connecting the guard lead to the ground. This reduces the stray leakage into the negative (measurement input) terminal considerably, but this technique is only permissible if the item under test is isolated from the ground. ('Isolated' means insulated by a resistance of at least 5 MΩ for the positive terminal or 10 kΩ for the negative terminal).

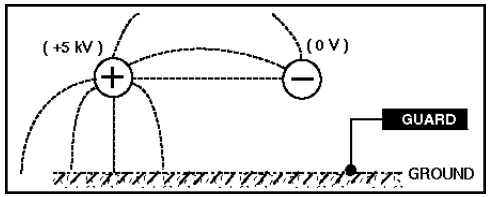

Figure 2.

Figure 3. shows a problem which can occur. If one end of the sample is grounded and this is required to be connected to the positive terminal, then the negative (measurement) lead is surrounded by a 5 kV field. This is likely to cause at least 1 nAof unwanted leakage current, representing a 5 TΩ resistance in parallel with the sample under test.

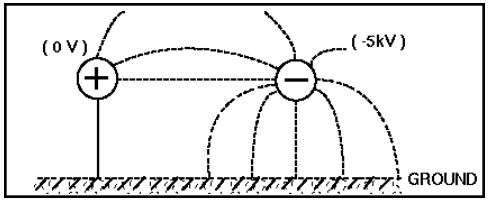

Figure 3.

When taking measurements above 100 GΩ therefore, the user should where possible ground the Guard Lead as shown in figure 2, otherwise parallel leakage paths may occur.

Specification

Test Voltages (d.c.):	500 V, 1000 V, 2500 V & 5000 V 50 – 5000 V variable in 25 V steps
Voltage Accuracy (0 °C to + 30 °C):	±2% ±1 V of nominal test voltages (load resistance >100 MΩ)
Insulation Range:	100 kΩ to 1 TΩ analogue 10 kΩ to 5 TΩ digital
Insulation Accuracy (0 °C to + 30 °C):	±5% 1 MΩ to 1TΩ at 5 kV ±5% 1 MΩ to 100 GΩ at 500 V ±5% 1 MΩ to 10 GΩ at 50 V ±20% 100 kΩ to 1 MΩ and 1 TΩ to 5 TΩ at 5 kV ±20% 100 kΩ to 1 MΩ and 100 GΩ to 500 GΩ at 500 V For extended temperature range –20°C to + 50°C the percentage error doubles
Short Circuit Current:	5 mA nominal

Typical Terminal Voltage Characteristics

Leakage current range:	0,01 nA to 999 µA
Accuracy (0°C to +30°C):	±5% ±0,2 nAat all voltages
Capacitance range:	0,01 µF to 10,0 µF (measured with test voltages > 200 V)
Accuracy (0°C to 30°C):	±15% ±0,03 µF
Hum Rejection:	1 mA rms per kV test voltage 2 mA rms maximum
Voltage range:	50–1000 V a.c. or d.c. **Note:** Display does not distinguish between V a.c. and V d.c.
Accuracy (0°C to +30°C):	±5% ±1 V
Guard Terminal:	Will guard out parallel resistances to a minimum of 250 kΩ. When measuring 100 MΩ under these conditions, the additional error will be less than 5%.
Capacitor charging time:	<2,5 seconds per µF to charge to 5 kV
Capacitor discharging time:	<2 seconds per µF to discharge to <50 V
Temperature coefficient:	0,2% per °C (test current >100 nA) 0,1% per °C for test voltage
Power supply:	Two 12 V, 2 Ah Lead-acid rechargeable batteries. Recharge time: 16 hours Battery life: typically 8 hours continuous testing Voltage Input Range: 95 - 265V

Specification

Timer:	0 – 90 minutes: user selects test duration
Fuses:	FS1: 100 mA (T), 250 V IEC 127/1 FS2: 100 mA (F), 250 V IEC 127/1
	Mains power cord fused plug (when applicable): 13 Amp fuse to BS1362
Safety:	The instrument meets the safety requirements for double insulation to IEC 1010-1 (1995)
	EN 61010 (1995) to installation Category III, 300 Volts phase to earth (ground) and 500 Volts phase to phase.
Maximum Continuous Overload:	1 kV rms
E.M.C:	The instrument meets EN 50081-1, EN 50082-1 (1992) and EN 61326-1
Environmental protection:	IP54 (with the charging recess cover securely closed).
Temperature range:	Operating: –20°C to +50°C (Errors double outside range 0˚C to 30°C) Storage: -25°C to +65°C
Humidity:	90˚ RH at 40˚C
Altitude:	2000 metres maximum to operate within full specification
Dimensions:	327 mm x 316 mm x 196 mm (+ 60 mm pouch)
Weight:	6 kg
Cleaning:	Wipe the disconnected instrument with a clean cloth dampened with soapy water or Isopropyl Alcohol (IPA)

Accessories

Supplied with the instrument	Part Number	Cat. Number (US only)
User Guide	6172-374	
3 m HV test lead set	6121-403	(210968)
9 way ‘D’ female to 9 way ‘D’ female connector lead, 1,8m long	25955-025	
BM25 Download 3½ inch diskette	6139-085	
Accessory Pouch	6420-116	
Mains (line) power cord		

Available as an optional extra		
8 m HV test lead set	6221-451	
15 m HV test lead set	6221-452	
5 kV Calibration Box - ***CB101***	6311-077	
5 kV Shielded lead set 15 m long	6311-080	
12V d.c.charging lead with automotive cigarette lighter plug, 3m long	6231-584	
Test Record Card (Pack of 20)	6111-217	
Publications		
‘A Stitch in Time’	AVTM21-P8B	

Appendix 1

Results Displayed at end of each test

IR Test
Default test time 30 minutes.

Timer	Digital Indicator	Voltage Indicator
Test Duration	Blank	Final test voltage
Test Duration	R	Final test voltage
Test Duration	I	Final test voltage
Test Duration	µF	Final test voltage

Note: A capacitance value reading is only available if the test has run for more than one minute, and provided the reading was not over-range.

PI Test
Default test time of 10 minutes. Terminating the test prematurely still allows the test results to be calculated and displayed.

Timer	Digital Indicator	Voltage Indicator	Other
T3 Test Duration	Blank	Final test voltage	
T2 time	PI (T1 to T2)	Voltage at T2 time	PI cursor flashes
T3 time	PI (T2 to T3)	Voltage at T3 time	PI cursor flashes
T1 time	R at T1 time	Voltage at T1 time	
T2 time	R at T2 time	Voltage at T2 time	
T3 time	R at T3 time	Voltage at T3 time	
T3 time	µF	Voltage at T3 time	

Note: A capacitance value reading is only available if the test has run for more than one minute, and provided the reading was not over-range.

DD Test
Default test time of 30 minutes, followed by a 1 minute discharge time.Terminating the test prematurely still allows the test results to be calculated and displayed.

Timer	Digital Indicator	Voltage Indicator	Other
T3 Test Duration	Blank	Final test voltage	
T3 time	DD value	Voltage at T3 time	DD cursor flashes
T3 time	R at T3 time	Voltage at T3 time	
T3 time	I at T3 +1 minute	Voltage at T3 time	
T2 time	PI (T1 / T2)	Voltage at T2 time	PI cursor flashes
T3 time	µF	Voltage at T3 time	

Note: A capacitance value reading is only available if the test has run for more than one minute, and provided the reading was not over-range.

SV Test
Test time set at 5 minutes only. Terminating the test prematurely may cause some results to be displayed as **- - -**.

Timer	Digital Indicator	Voltage Indicator
Test Duration	Blank	Final test voltage
1,00 minute	R (at 1 minute)	Voltage at 1 minute
2,00 minute	R (at 2 minutes)	Voltage at 2 mins
3,00 minute	R (at 3 minutes)	Voltage at 3 mins
4,00 minute	R (at 4 minutes)	Voltage at 4 mins
5,00 minute	R (at 5 minutes)	Voltage at 5 mins
Test Duration	µF	Final test voltage

Note: A capacitance value reading is only available if the test has run for more than one minute, and provided the reading was not over-range

Appendix 2

RS 232 Output Information display examples

TEST	SET V	SET TIME	RES(M)	I(uA)	TERM V	DURATION	ENDED	CAP(uF)	
Leakage	2500	02:05							
			36860	0.07029	2591				
			44570	0.05813	2591				
			47880	0.05417	2592				
			49540	0.05232	2592				
			50260	0.05158	2592				
			53390	0.04856	2592				
			53710	0.04826	2592				
			53960	0.04804	2592				
			54220	0.04781	2592	02:05	Finished	0.01	

Spreadsheet format example

Heading	Type of Test
IR	R
Leakage	I
Burn	Burn
DD	DD
PI	PI
SV	SV

Extra columns at the end for specific DD test or PI test results.

ASCII format example

```
"TEST","SET V","SET TIME","RES(M)","I(uA)","TERM V","DURATION","ENDED","CAP(uF)
"Leakage","2500","02:05",
"","","",3.686e+04,7.029e-02,2591,
"","","",4.457e+04,5.813e-02,2591,
"","","",4.785e+04,5.417e-02,2592,
"","","",4.954e+04,5.232e-02,2592,
"","","",5.026e+04,5.158e-02,2592,
"","","",5.339e+04,4.856e-02,2592,
"","","",5.371e+04,4.826e-02,2592,
"","","",5.395e+04,4.804e-02,2592,
"","","",5.422e+04,4.781e-02,2592,"02:05","Finished",0.01,
```

Repair and Warranty

The instrument circuit contains static sensitive devices, and care must be taken in handling the printed circuit board. If the protection of an instrument has been impaired it should not be used, and be sent for repair by suitably trained and qualified personnel. The protection is likely to be impaired if, for example, the instrument shows visible damage, fails to perform the intended measurements, has been subjected to prolonged storage under unfavourable conditions, or has been exposed to severe transport stresses.

New Instruments are Guaranteed for 1 Year from the Date of Purchase by the User.

Note: Any unauthorized prior repair or adjustment will automatically invalidate the Warranty.

Instrument Repair and Spare Parts
For service requirements for ***MEGGER***® Instruments contact :-

AVO INTERNATIONAL **or**
Archcliffe Road
Dover
Kent, CT17 9EN.
England.

Tel: +44 (0) 1304 502243
Fax: +44 (0) 1304 207342

AVO INTERNATIONAL
Valley Forge Corporate Center
2621 Van Buren Avenue
Norristown
PA19403 U.S.A.

Tel: +1 (610) 676-8579
Fax: +1 (610) 676-8625

or an approved repair company.

Approved Repair Companies
A number of independent instrument repair companies have been approved for repair work on most ***MEGGER***® instruments, using genuine ***MEGGER***® spare parts. Consult the Appointed Distributor / Agent regarding spare parts, repair facilities and advice on the best course of action to take.

Returning Instrument for Repair
If returning an instrument to the manufacturer for repair, it should be sent freight pre -paid to the appropriate address. A copy of the Invoice and of the packing note should be sent simultaneously by airmail to expedite clearance through Customs. A repair estimate showing freight return and other charges will be submitted to the sender, if required, before work on the instrument commences.

AVERTISSEMENTS DE SECURITE

- Avant d'utiliser l'instrument, il est recommandé de lire attentivement et de bien comprendre les **Avertissements de Sécurité** ainsi que les **Précautions** de tests. Ceux-ci **devront être** observés pendant l'utilisation.
- Le circuit testé **doit être** débranché, mis hors tension et isolé avant d'effectuer les connexions de tests.
- Le ***S1-5005*** peut produire jusqu'à 5 mA à 5000 V. Il ne faut pas toucher les connexions du système quand HV est sélectionné.
- Les circuits **doivent être** déchargés avant de connecter les câbles de tests.
- Il se peut, dans certains cas, que l'instrument arrête le test en cours en cas de panne du circuit testé et que l'affichage disparaisse tandis que le circuit est encore sous tension. Dans ce cas, il est important que l'instrument soit débranché **avant** de toucher aux connexions.
- La zone des bornes de tests ainsi que le retrait du tableau de chargement **devront être** maintenus propres et secs.
- Les fusibles de remplacement **doivent être** d'un modèle et d'une valeur nominale corrects.
- L'instrument **ne devra pas** être utilisé si certains de ses composants sont endommagés.
- Pour plus amples explications et précautions, veuillez vous référer à la section **Précautions d'essai**, page 36.

NOTA

L'EMPLOI DE CET APPAREIL DOIT ÊTRE CONFIÉ À UN PERSONNEL FORMÉ ET COMPÉTENT.

Table des Materiéres

User Guide - p2 **Gebrauchsanleitung - s50** **Guía del usuario - p70**

Avertissements de Sécurité 30
Description Générale 32
Récapitulatif du mode d'essai 33
Fonctions et Commandes 34
Recharge des accumulateurs 35
Fonctionnement
Précautions d'essai 36
Réalisation des essais - généralités 37
Procédure d'essai
Test de Résistance de l'Isolation (**R**) 38
Test de mesure du Courant (**I**) 38
Test d'Indice de Polarisation (**PI**) 38
Test de Décharge Diélectrique (**DD**) 39
Essai à Paliers de Tension (**SV**) 39
Réglages en Usine 40
Test **PI** à Durée Personnalisée 40
Test **DD** à Durée Personnalisée 40
Fixer les Valeurs de Durée Personnalisée 40
Utilisation de la borne de protection 41
Mesures à plus de 100 GΩ
Conditionnement de la Défaillance (Claquage) 41
Indicateurs de condition et d'avertissement 42
Transfert de données 44
Annexe 1 46
Annexe 2 48
Réparation et Garantie 49

Symboles utilisés sur l'instrument

Attention: se rapporte aux remarques d'accompagnement.

Risque de choc électrique.

Equipement protégé d'un bout à l'autre par isolation double ou renforcée (Classe II).

L'équipement est conforme aux directives de l'UE.

Description Générale

Le ***S1-5005*** est un instrument compact, à haute tension automatisé et marchant sur piles, utilisé pour effectuer des tests d'Indice de Polarisation, de Paliers de Tension et de Décharge Diélectrique ainsi que des test d'Isolation à l'improviste. Le ***S1-5005*** possède une capacité de mesure de résistance d'un maximum de 5 TΩ et les mesures de courant de fuite permettent de mesurer des résistances d'un maximum de 500 TΩ.

Le design de l'instrument met à profit la technologie des microprocesseurs et possède un grand affichage à cristaux liquides transparents, offrant à la fois des lectures numériques et analogiques des résistances d'isolation.

Il est possible de sélectionner des options de tension nominale préréglées de 500 V, 1000 V, 2500 V et 5000 V. Un réglage variable de sortie de tension offre un choix entre 25 V et 5000 V avec augmentations incrémentielles par étapes de 25 V.

Lors de son branchement, l'appareil effectue un test de calibrage automatique qui ajuste automatiquement le système de mesures. La séquence de calibrage invalidera tout test si le système de mesures n'atteint pas les limites préréglées.

Dès qu'un test commence, le DEL d'avertissement de HV se trouvant sur le devant de l'instrument ainsi que les symboles d'avertissement de HV sur l'affichage, clignotent. La minuterie intégrale se met en marche automatiquement et affiche les minutes et les secondes écoulées depuis le démarrage du test. La minuterie qui peut être utilisée pour déterminer la durée d'un test arrêtera automatiquement la tension de sortie quand la durée fixée s'est écoulée.

Pendant un essai, un connecteur **RS 232** reçoit automatiquement des mesures toutes les cinq secondes, par le biais d'une liaison optique isolée, ce qui permet de transmettre ces résultats à un ordinateur. Un indicateur à segments affiche en continu la capacité des accumulateurs.Cet indicateur clignote dès qu'il faut recharger les recharger. Cet appareil est en fait alimenté par deux accus plomb rechargeables, hermétiquement scellées et branchées en parallèle. Lorsqu'une accumulateur tombe en panne (ou si un fusible interne de protection saute) cet instrument continue de fonctionner en employant la deuxième accu. La recharge de ces piles est assurée par une tension extérieure de 95-265 V a.c., 50-60 Hz ou de 12 V c.c.

Les connexions pour la recharge, le témoin d'alimentation secteur et les fusibles de protection de cet instrument sont implantés dans le panneau avant, dans un creux protégé contre les éclaboussures. L'accés se fait par le couvercle glissant.

Le couvercle à charnières spécialement conçu se retire et se remet en place facilement, au cas où cela s'avèrerait nécessaire. Ces charnières protègent la face avant contre toute contrainte et contre tout endommagement; en effet, ce couvercle se décroche automatiquement en cas d'ouverture accidentelle au-delà de la limite prévue.

Les caractéristiques de sécurité du design comprennent :-

- Le DEL clignotant d'avertissement de HV sur le devant de l'instrument ainsi que les symboles de HV clignotants sur l'affichage avertissent l'utilisateur qu'une tension dangereuse est présente durant le test.
- Tension externe >50 V affichée grâce à des symboles clignotants de HV sur l'affichage.
- La charge est automatiquement éliminée à la fin d'un essai et la tension de décharge (>50 V) vient s'afficher.
- Le couvercle coulissant a un dispositif de verrouillage qui empêche tout accès simultané aux bornes de recharge et d'essai.
- Les prises femelles des bornes d'essai viennent se brancher et se verrouiller dans le boîtier, afin d'empêcher tout débranchement accidentel.

Récapitulatif du mode d'essai

Essais de résistance d'isolement (R)
Cette fonction mesure la résistance d'isolement à la tension sélectionnée et affiche une valeur ponctuelle instantanée. Le résultat de l'essai final est donné sous une forme séquentielle et s'accompagne du courant correspondant de fuite correspondant ainsi que de la capacité.

Test de Mesure du Courant (I)
Ce mode mesure l'isolation à la tension sélectionnée afin de fournir une lecture immédiate à l'improviste mais affiche la valeur du courant de fuite sur l'affichage numérique. (N.B l'échelle analogue affiche toujours la résistance). Le résultat final du test est donné de façon séquentielle avec les valeurs correspondantes de résistance et de capacitance.

Test d'Indice de Polarisation (PI)
Indice de Polarisation est un terme s'appliquant au rapport d'Absorption Diélectrique, quand l'isolant est sujet à un test de résistance de l'isolation et que les valeurs de résistance sont mesurées après **T1** (Durée implicite 1 minute) et encore après **T2** (Durée implicite 10 minutes). L'indice de Polarisation est calculé automatiquement à partir de la valeur de résistance après la durée **T2**, divisée par la valeur de résistance après la durée **T1**. Une absorption diélectrique élevée est indiquée par un rapport PI élevé. Le résultat final du test est donné de façon séquentielle avec les valeurs correspondantes de fuite et de capacitance. Le test marchera quel que soit la tension. Des valeurs PI de durée personnalisée peuvent être fixées si besoin est (voir '**Test PI à Durée Personnalisée**' page 40).

Test de Décharge Diélectrique (DD)
Ce mode mesure l'absorption diélectrique d'un article testé en ignorant les effets des lignes de fuite de surfaces parallèles. La durée implicite du test est de 30 minutes, suivies d'une minute de décharge. Le résultat final du test est donné de façon séquentielle avec la valeur PI, la valeur finale de résistance ainsi que la valeur de capacitance. Les valeurs DD de durée personnalisée peuvent être fixées si besoin est (voir '**Test DD à Durée Personnalisée**' page 40).

Essai en paliers de tension (SV)
Cet essai de 5 minutes est basé sur le principe qu'un isolement idéal produit une résistance identique quelle que soit la tension. Inversement, la résistance d'un structure soumise à des contraintes excessives diminue au fur et à mesure que la tension augmente. Lors d'un fonctionnement à 2,5 kV ou à 5 kV, la tension augmente d'un cinquième toutes les minutes, avec prise de mesures successives. Une fois ces essais terminés, les cinq résultats distincts viennent s'afficher sous une forme séquentielle et sont suivis de la capacité.

Conditionnement de défaut (BURN)
Cette fonction à faible courant permet d'effectuer des essais en continu en reproduisant les conditions qui existent en cas de panne.

Remarques générales
1) La capacité ne s'affiche que si l'essai s'est déroulé pendant au moins une minute, sans dépassement de limites.
2) La sélection des résistances internes de décharge est automatique :
   - à la fin de chaque essai
   - lors de la mise hors tension de l'appareil
   - lors de la détection d'une erreur interne.

Toute tension résiduelle sur les bornes à la fin d'un test sera affichée jusqu'à ce qu'elle se soit abaissée au-dessous de 50 V. Durant le test, la sortie de tension à la borne est affichée ainsi que les symboles clignotants de haute tension et le DEL rouge clignotant.

Fonctions et Commandes

Couvercle en creux à l'épreuve des éclaboussures - Faire coulisser ce couvercle pour accéder aux branchements secteur et aux connexions de recharge des accumulateurs 12 V ainsi qu'aux fusibles de protection de cet appareil.

Prise femelle RS232C - Elle envoie des résultats d'essai toutes les 5 secondes afin de les transmettre à un ordinateur personnel.

Témoins de conditions et d'avertissement - Ils clignotent pour indiquer la presence de conditions inopportunes qui affectent l'essai en cours. Ils signalent également l'affichage séquentiel des résultats du dernier essai

Curseur gauche d'affichage - Il indique la tension sélectionnée ou la fonction

Affichage du minuteur - Il indique la durée programmée de l'essai ainsi que le temps qui s'est écoulé depuis le début du test.

Avertissement HV – Clignote quand un test est en cours ou en présence d'une tension dangereuse.

Bouton Marche/Arrêt - Appuyer sur ce bouton pour mettre l'appareil sous tension ou hors tension. (Prévoyez quelques secondes pour le calibrage automatique)

Touches de sélection
1) Sélection de la tension
2) Sélection du minuteur

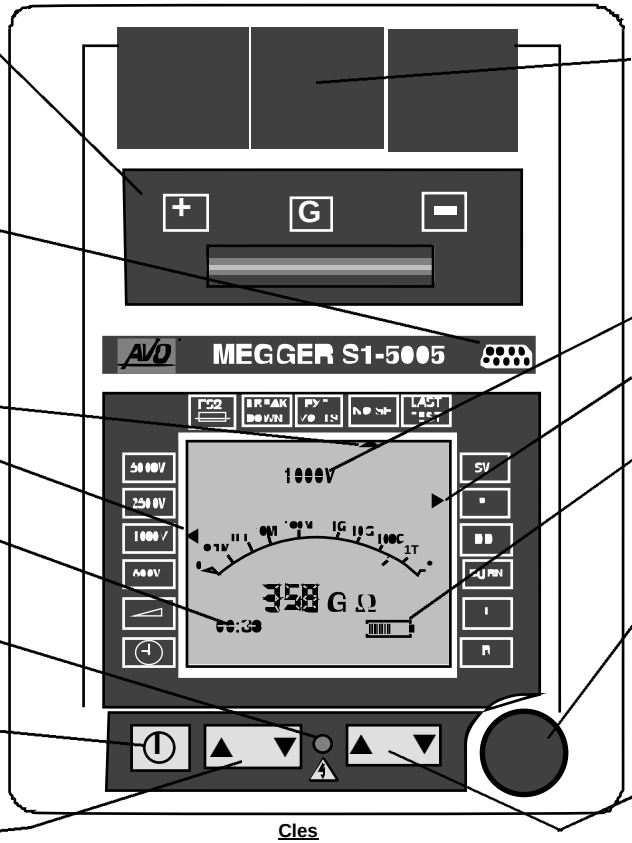

Cles

BREAKDOWN	-	PANNE
EXTVOLTS	-	TENSION EXT
NOISE	-	BRUIT
LASTTEST	-	DERNIER ESSAI
BURN	-	CLAQUAGE

Couvercles des connexions de bornes Chaque couvercle se soulève, ce qui permet d'accéder aux bornes des conducteurs d'essai. Ces couvercles bénéficient d'un dispositif de sécurité par verrouillage avec le couvercle coulissant en creux.

Affichage de la tension - Tension d'essai ou externe >50 V avec clignotement des symboles H.T.

Curseur droit d'affichage - Il indique le mode d'essai sélectionné.

Témoin de capacité des accumulateurs- Ses segments s'effacent les uns après les autres, au fur et à mesure que la charge de la pile s'épuise. Ce symbole clignote dès que cette charge est insuffisante.

Bouton-poussoir d'essai - Appuyez sur ce bouton pendant au moins 1 seconde pour lancer un essai et déclencher le minuteur. Appuyez de nouveau sur ce bouton pour arrêter manuellement l'essai en cours.

Touches de sélection de plage
1) Sélection du mode d'essai.
2) Réglage d'une tension variable.
3) Réglage du minuteur sur une duré ne dépassant pas 90 minutes.

Recharge des accumulateurs

Généralités
Il est recommandé de bien charger les accus avant de mettre en route ces appareils pour la première fois. Cette recharge s'obtient à partir d'une alimentation secteur externe ou d'une alimentation de 12 V c.c. Un conducteur de recharge muni d'une prise mâle vient se brancher sur l'allume-cigare d'une automobile et permet de recharger ces accumulateurs en utilisant la batterie du véhicule. Pendant une recharge, les essais sont bloqués.

Recharge depuis l'alimentation secteur
Pour effectuer la recharge en utilisant l'alimentation secteur, il faut que la tension se situe entre 95 et 265 V c.a., 50 - 60 Hz. Débranchez les conducteurs d'essai puis branchez l'alimentation secteur sur le connecteur CEI 320 qui se trouve dans le creux de recharge. Vérifiez que le témoin rouge s'allume. La recharge s'effectue automatiquement, dès que l'alimentation secteur est branchée. Pour recharger complètement une accu, il faut environ 16 heures. Une recharge de 8 heures (d'une accu à plat) permet d'atteindre au moins 90% de la charge maximale. Mettez l'instrument sous tension et vérifiez que le témoin de capacité de l'accu s'allume et indique la charge obtenue.

Recharge depuis une alimentation de 12 V c.c.
Vous ne devez employer cette méthode de recharge que si vous ne disposez pas d'une alimentation secteur étant donné qu'elle est plus lente et moins efficace. En cas d'utilisation de la batterie d'un véhicule pour effectuer cette recharge, le moteur doit tourner. Respectez les polarités illustrées. Branchez la prise femelle DIN de 12 V sur l'alimentation externe de 12 V c.c. puis mettez l'ensemble sous tension.

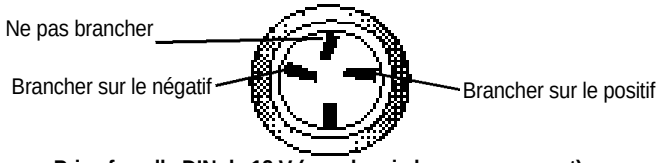

Prise femelle DIN de 12 V (vue depuis le panneau avant)

Attention: l'emploi d'une tension supérieure à 15 V sur cette prise femelle provoque une recharge excessive de l'accu.

Remarques sur la recharge d'une accu:

1) **N'attendez pas** que l'accu soit totalement à plat. Des recharges fréquentes qui ont pour but de compléter la recharge d'une pile en prolongent la durée de vie opérationnelle.
2) Cette recharge doit se faire dans un lieu sec (le niveau de protection IP54 est garanti lorsque le couvercle de recharge est bien fermé).
3) Lors de la recharge d'un accu sous abri, la zone où s'effectue cette opération doit être bien ventilée.
4) Cette recharge doit s'effectuer à des températures comprises entre 0 et 40°C.
5) Il est recommandé de poursuivre la recharge le plus longtemps possible car vous ne risquez pas d'endommager l'accu en laissant le rechargeur constamment sous tension.
6) Si cet appareil n'est pas utilisé pendant de longues périodes, il faut en recharger l'accu pendant au moins 24 heures tous les 6 mois (à des fréquences plus rapprochées si la température de stockage est supérieure à 40°C).

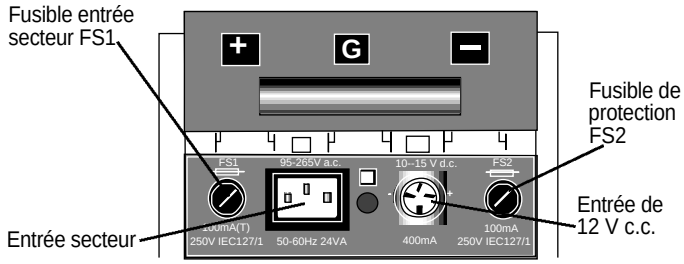

Fonctionnement

Précautions d'essai

⚠ Le circuit à l'essai **doit être** complètement déchargé et isolé avant de procéder à des branchements d'essai.

1. Le fonctionnement de cet appareil doit être confié à une personnel formé et compétent.
2. Il **ne faut pas** toucher aux connexions de circuit pendant un essai.
3. Le ***S1-5005*** peut donner un choc électrique. Les circuits à forte
   capacité (par exemple les cables de grand longuer) qui acheminent plusieurs kilovolts peuvent créer une charge potentiellemen mortelle.
4. Procédez avec soin pour éviter le débranchement de circuits capacitifs pendant un essai, en laissant ces circuits en charge.
5. Le voltmètre et la fonction de décharge automatique du ***S1-5005*** doivent être considérés comme des fonctions supplémentaires de sécurité et ne doivent pas remplacer les pratiques normales de travail en toute sécurité.
6. Lors du déroulement d'essais prolongés sans personnel présent, procédez avec soin pour éviter tout risque de blessure ou d'endommagement.
7. Lors de l'utilisation de la fonction '**BURN'**, procédez avec soin pour éviter tout risque de blessure ou de dégâts substantiels.
8. Il se peut qu'en certaines circonstances, une panne du circuit testé puisse inciter l'instrument à terminer le test, ce qui pourrait engendrer une disparition de l'affichage tandis que le circuit est **toujours sous tension**. Dans ce cas, il faudra décharger le circuit et débrancher l'instrument avant de toucher aux connexions.
9. Le ***S1-5005*** se classe dans la catégorie de protection de l'environnement IP54 à condition que son couvercle en creux de recharge soit bien fermé Sur le plan de la sécurité (et pour éviter de créer des courants intempestifs de fuite), il est important que la zone des bornes d'essai et du creux de recharge soit toujours totalement exempte de poussières et d'humidité.
10. Avant toute utilisation, **il faut** enlever de la surface de l'instrument toute humidité (en particulier au niveau des prises femelles des conducteurs d'essai).
11. Les fusibles de rechange **doivent** être d'une puissance nominale et d'un type corrects. Consultez la section '**Specifications**' qui fournit des renseignements détaillés sur ces fusibles.
12. Si une partie quelle qu'elle soit de l'instrument est endommagée, **il ne faut pas** s'en servir mais le renvoyer au fabricant ou à une société agréée de réparations.
13. Si la prise mâle du cordon électrique ne correspond pas à vos prises femelles, il ne faut pas utiliser d'adaptateur. Il convient d'employer un autre cordon secteur de type approprié ou de préparer avec soin l'embout du cordon électrique avant d'y brancher une prise mâle de type approprié. Il convient pour cela de respecter le code de câblage suivant :

	Royaume-Uni	Etats-Unis
Terre (masse)	jaune/vert	vert
Neutre	bleu	blanc
Phase (ligne)	marron	noir

Réalisation des essais - généralités

1. Mettez le ***S1-5005*** sous tension en appuyant à une reprise sur le bouton 'MARCHE/ARRET'. Tous les segments à cristaux liquides doivent s'al lumer pendant 5 secondes puis le mot **'CAL**' doit apparaître pendant environ 5 secondes. Lorsque ce mot **'CAL'** disparaît, cet appareil est prêt à fonctionner et passe dans le mode de veille.

Nota : lorsque le ***S1-5005*** n'effectue pas des essais, c'est-à-dire lorsqu'il est dans le mode de veille, il fonctionne comme un voltmètre (entre 50 et 1000V).

2. Vérifiez que tous les conducteurs sont propres et en bon état puis branchez-les sur le circuit isolé à l'essai.

   Si une tension externe >50 V est détectée, elle vient s'afficher et s'accompagne des symboles clignotants haute tension.

3. Sélectionnez le mode d'essai requis en utilisant les touches de sélection de plage qui permettent de déplacer le curseur droit.
4. Si vous avez décidé de ne pas accepter la durée implicite d'essai,utilisez les touches de sélection pour déplacer le curseur gauche et l'amener sur la position Minuteur et augmentez la durée de l'essai pour l'amener ainsi sur la valeur souhaitée, en utilisant pour cela les touch es de sélection de plage. La sélection d'une durée égale à zéro empêche le déroulement de tous les essais. Vous ne pouvez pas sélectionner une durée supérieure à 90 minutes pour les essais.
5. Utilisez de nouveau les touches de sélection pour programmer la tension d'essai requise. La position Tension variable vous permet de sélectionner une valeur qui n'est pas standard et qui se situe entre 25 et 5000 V c.c. ou de modifier en continu cette tension par paliers de 25 V pendant le déroulement d'un essai. Pour effectuer une sélection, amenez le curseur gauche sur la position Tension variable puis ajustez la tension des bornes de sortie en utilisant les touches de sélection de plage. La tension ainsi sélectionnée vient s'afficher en haut de l'écran. Lorsque vous programmez une tension variable, vous ne pouvez pas modifier le mode d'essai.

Nota : la modification de la tension pendant le déroulement d'un essai change provisoirement la valeur affichée. Une valeur stable réapparaît dès que la nouvelle tension s'est stabilisée pendant une période complète d'échantillonnage (en général de l'ordre de 5 secondes).

6. Initialisez un test en pressant le bouton rouge de test pendant au moins une seconde. Les DELs rouges clignotants ainsi que les symboles clignotants de HV avertissent qu'un test est en cours.
7. Lors d'essais portant sur des charges résistives ou légèrement capacitives (ne dépassant pas environ 1µF), la tension d'essai vient s'afficher pendant quelques secondes. Cette tension est égale à la valeur nominale à plus ou moins 5% près et se corrige automatiquement en fonction des changements de résistance. La tension réelle de sortie vient s'afficher pendant les essais. Lors d'essais portant sur des composants capacitifs, l'élévation de tension est sensiblement plus lente. Lorsque la résistance est faible (inférieure à 10 MΩ), cette tension peut même ne jamais atteindre sa valeur minimale.
8. L'affichage de la résistance d'isolement est mis à jour toutes les secondes dans le cadre de mesures ne dépassant pas environ 100 MΩ. En ce qui concerne les mesures comprises entre 1 GΩ et l'infini, la cadence des échantillonnages ralentit et tombe à 20 secondes.
9. Vous pouvez interrompre manuellement un essai, à tout moment, en appuyant sur le bouton d'essai rouge. Un essai s'interrompt automatiquement si :
   - la durée programmée de l'essai est atteinte.
   - l'isolation testée subit une défaillance complète.
   - il y a des bruits parasites électriques excessifs (>2 mA à 5 kV).
   - l'accue tombe à plat.
   - le fusible FS2 saute.
   - une défaillance interne se produit.

Lorsqu'un essai s'interrompt, le composant testé est automatiquement déchargé.

10. Pour mettre l'instrument hors tension, appuyez à une reprise sur le bouton Marche/Arret. Une mise hors tension automatique se déclenche après 10 minutes d'inactivité dans les modes **'R', 'I'** et **'CLAQUAGE'** et après 30 minutes d'inactivité dans les modes **'DD'**, **'PI'** et **'SV'**.

Fonctionnement

Procédures d'essai

Test de Résistance de l'Isolation (R)

1. En utilisant les touches de Plage ▲ ▼, placez le curseur de droite sur '**R**'.
2. Acceptez la durée implicite de 30 minutes, ou, en utilisant les touches de ▲ ▼ Sélection, placez le curseur de gauche en position , puis fixez la durée du test en utilisant les touches de Plage fixées. La durée maximum de test est de 90 minutes.
3. En utilisant les touches de Sélection ▲ ▼, placez le curseur de gauche sur la tension de test requise.
4. Lancez l'essai en appuyant sur le bouton d'essai rouge pendant au moins 1 seconde.
5. Une fois les essais terminés, la mesure finale de résistance vient s'afficher d'une manière séquentielle et s'accompagne du courant de fuite correspondant et, le cas échéant, de la valeur de la capacitance. Cet affichage séquentiel se reproduit jusqu'à ce que l'opérateur appuie sur une touche ou jusqu'à ce que la mise hors tension automatique se déclenche. Pour de plus amples renseignements sur les informations fournies par l'affichage final, consultez l'**Annexe 1**.

Test de Mesure du Courant (I)

Ce mode d'essai mesure en continu l'isolement à la tension sélectionnée mais affiche en outre le courant de fuite au lieu de la résistance. Cela permet de tester des résistances encore plus élevées, sans oublier cependant que plus le courant de fuite se rapproche de zéro et plus la précision de l'affichage diminue. En théorie, cette méthode permet de mesurer une résistance maximale de 500 TΩ à 5 000 V mais il faudra effectuer un essai de calibrage en circuit ouvert pour déterminer le courant de décalage du circuit de mesure et le courant de fuite des conducteurs d'essai. Ce dernier est égal à ± 0,2 nA lorsque les températures sont normales et lorsque les conducteurs d'essai sont neufs et propres.

1. En utilisant les touches de Plage ▲ ▼, placez le curseur de droite sur (**I**) et suivez la même procédure que pour le Test d'Isolation '**R**'.
2. Une fois ces essais terminés, la mesure du courant finale de fuite vient s'afficher d'une manière séquentielle et s'accompagne de la résistance et, le cas échéant, de la capacité. Cet affichage séquentiel se repro duit jusqu'à ce que l'opérateur appuie sur une touche ou jusqu'à ce que la mise hors tension automatique se déclenche. Pour de plus amples reseignements sur les informations fournies par l'affichage final, consultez l'**Annexe 1**.

Test d'Indice de Polarisation (PI)

Indice de Polarisation est un terme s'appliquant au rapport d'Absorption Diélectrique, quand l'isolant est sujet à un test de résistance de l'isolation et que les valeurs de résistance sont mesurées après **T1** (Durée implicite 1 minute) et encore après **T2** (Durée implicite 10 minutes). Le test marchera quel que soit la tension. L'indice de Polarisation est ainsi équivalent à la valeur de résistance après la durée **T2**, divisée par la valeur de résistance après la durée **T1**.

1. En utilisant les touches de Plage▲ ▼, placez le curseur de droite sur '**PI**'.
2. En utilisant les touches de Sélection ▲ ▼, placez le curseur de gauche sur la tension de test requise.

3. Initialisez le test en appuyant sur le bouton rouge de test pendant au moins une seconde.

4. Après que le test soit terminé, le rapport **PI** sera affiché séquentiellement, suivi des valeurs de résistance correspondantes à 1 minute et 10 minutes, et si elle est disponible, de la valeur de capacitance.

5. Au lieu d'une valeur de durée personnalisée **T3**, l'affichage indiquera **- - -**. Cet affichage séquentiel sera répété jusqu'à ce qu'une touche soit pressée ou que l'Auto-Arrêt se déclenche. Pour obtenir plus amples détails sur les informations du dernier affichage, veuillez consulter l'**Annexe 1**.

Test de Décharge Diélectrique (DD)

Ce test mesure l'absorption diélectrique d'un isolant et indique les quantités d'impuretés et d'humidité absor. Ces paramètres implicites ont une tension de 500 V et une durée de 30 minutes. Cependant, vous pouvez modifier ces paramètres en fonction de vos besoins. Les paramètres implicites sont réinitialisés si vous placez le curseur de la position '**DD**'. L'isolateur en essai est chargé à 500 V pendant 30 minutes (pour parvenir à une condition stable). Il y a ensuite une décharge rapide durant laquelle la capacité est mesurée. Le flux résiduel de courant est alors mesuré au bout d'une minute et la valeur '**DD**' est calculée en faisant appel à la formule suivante :

$$\frac{\text{Courant après 1 minute (mA)}}{\text{Tension d'essai (V) x capacitance (F)}}$$

1. En utilisant les touches de Plage ▲▼ , placez le curseur de droite sur '**DD**'.

2. Acceptez le durée implicite de 30 minutes, ou, en utilisant les touches de Sélection ▲ ▼, placez le curseur de gauche sur la position , puis fixez la durée du test en utilisant les touches de Plage ▲ ▼. La durée maximum du test est de 90 minutes.

3. Acceptez le valeur implicite de tension de 500 V, ou, en utilisant les touches de Sélection ▲ ▼, placez le curseur de gauche sur la tension de test requis.

4. Initialisez le test en appuyant sur le bouton rouge de test pendant au moins une seconde.

5. Après que le test soit terminé, la valeur '**DD**' sera affichée séquentiellement avec les valeurs d'isolation correspondantes ainsi que les valeurs de rapport PI et de capacitance. Cet affichage séquentiel sera répété jusqu'à ce qu'une touche soit pressée ou que l'Auto-Arrêt se déclenche. Pour obtenir plus amples détails sur les informations du dernier affichage, veuillez consulter l'**Annexe 1**.

Essai à Paliers de Tension (SV)

Cet essai est basé sur le principe qu'un isolateur idéal produit une résistance identique quelle que soit la tension. Inversement, la résistance d'un isolateur soumis à des contraintes excessives diminue au fur et à mesure que la tension augmente. Lors d'un fonctionnement à 2,5 kV ou à 5 kV, la tension augmente d'un cinquième toutes les minutes, pendant 5 minutes, avec prise de mesures successives.

1. En utilisant les touches de Plage ▲▼ , placez le curseur de droite sur '**SV**'.

2. Acceptez la durée implicite de test de 5 minutes.

3. Acceptez la valeur implicite de tension de 2.500 V, ou, en utilisant les touches de Sélection ▲ ▼, placez le curseur de gauche sur la position 5000 V.

Fonctionnement

4. Initialisez le test en appuyant sur le bouton rouge de test pendant au moins une seconde.

5. Après que le test soit terminé, chacun des 5 résultats individuels sera affiché séquentiellement suivi de la valeur de capacitance si disponible. Cet affichage séquentiel sera répété jusqu'à ce qu'une touche soit pressée ou que l'Auto-Arrêt se déclenche. Pour obtenir plus amples détails sur les informations du dernier affichage, veuillez consulter l'**Annexe 1**.

Réglages en Usine

Le tableau suivant indique les durées de test pour chacun des modes de tests, telles que fixées sur un nouvel instrument. Veuillez noter que les durées de test **T1** et **T2** fixées pour le test **PI** sont utilisées pour calculer un résultat **PI** quand un test **DD** est effectué.

Mode de Test	T1	T2	T3
SV	-	-	5 min (fixé)
PI	1 min	10 min	10 min
DD	Meme ques **PI**	Meme ques **PI**	30 min
Claquage - IR	-	-	30 min

Test PI à Durée Personnalisée
Lorsqu'il est neuf, le ***S1-5005*** est installé avec un rapport **PI** calculé sur des réglages de durée de 1 minute (**T1**) et de 10 minutes (**T2**). La durée **T3** est également fixée à 10 minutes. Ces réglages peuvent être ajustés entre 15 secondes et 90 minutes. Ce réglage initial produit un résultat **PI**, basé sur la rapport entre **T1** et **T2**. **T3** est la durée totale du test (10 minutes initialement pour la durée du test). Si l'on ajuste **T3**, deux valeurs individuelles de rapport **PI** peuvent être calculées. Le premier rapport **PI** est basé sur les mesures des valeurs **T1** et **T2**. Le second résultat est calculé à partir des réglages de durée de **T2** et **T3**. Veuillez noter que si **T2** est égal à **T3**, un seul résultat sera calculé.

Test DD à Durée Personnalisée
Le test **DD** peut être personnalisé de la même façon que le test **PI**. Au départ **T1** = **1 minute**, **T2** = **10 minutes**, **T3** = **30 minutes**. Ceci donne un rapport **PI** basé sur **T2/T1**, en plus de la valeur **DD**.

Fixer les Valeurs de Durée Personnalisée
1. En utilisant les touches de Plage ▲ ▼ sur la droite, choisissez le mode de test désiré.

2. En utilisant les touches de Sélection ▲ ▼ sur la gauche, choisissez .

3. Fixez la durée **T3** en utilisant les touches de Sélection ▲ ▼ sur la droite. Ceci fait, appuyez sur la touche de sélection sur la gauche ▼. La durée **T2** sera affichée de la façon suivante **- - 2**.

4. Fixez **T2** en utilisant les touches de Plage ▲ ▼ sur la droite. Après avoir terminé, appuyez sur la touche de sélection gauche ▼. La durée **T1** est affichée de la façon suivante **- - 1**.

Note :-
- Ces durées peuvent être ajustées dans n'importe quel ordre, **T1** cependant devra être la plus courte et **T3** la plus longue.
- Les valeurs fixées pour **T1** et **T2** seront utilisées pour les tests **PI** et **DD**.

- Les valeurs **T3** sont indépendantes pour les tests **PI** et **DD**.
- Les nouvelles durées de test sont sauvegardées quand la machine est débranchée.
- Si deux valeurs sont identiques, le résultat **PI** n'est pas calculé et l'affichage indiquera **- - -** .

Fin de l'Affichage des Résultats de Test
Après l'affichage de la durée **T3**, le test s'arrête et les résultats du test en entier sont affichés en une séquence qui se répète continuellement. Pour plus amples détails sur l'information affichée, veuillez consulter l'**Annexe 1**.

Utilisation de la borne de protection

Lors des essais d'isolement de base et lorsqu'il est fort peu probable que des courants de fuite en surface n'affectent les mesures, il n'est pas nécessaire d'utiliser la borne de protection, à condition que la structure en essai soit propre et que l'existence de trajets de courant inopportuns soit très improbable. Cependant, lors d'essais portant sur des câbles, il peut y avoir des trajets de courant de fuite en surface au travers de l'isolement, entre le câble nu et la gaine externe, du fait de la présence d'une humidité ou de poussières.

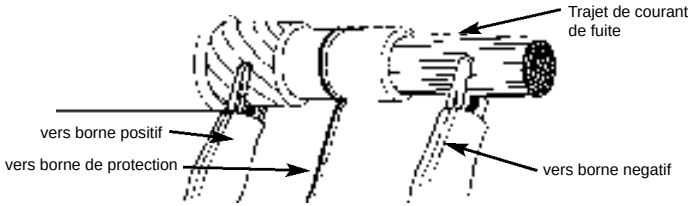

S'il faut éliminer les effets dûs à ce courant de fuite, en particulier lors des essais à haute tension, vous pouvez enrouler serré un fil nu autour de l'isolement et le raccorder à la borne de protection '**G**' par le biais du troisième conducteur d'essai.
La borne de protection a le même potentiel que la borne négative. Etant donné que la résistance de fuite est en fait parallèle à la résistance qu'il faut mesurer, l'utilisation de cette protection détourne le courant de fuite qui suit un trajet en surface et l'éloigne ainsi du circuit de mesure. Par conséquent, l'instrument lit le courant de fuite de la structure en essai et ne tient pas compte du courant de fuite au niveau de sa surface.

Mesures à plus de 100 GΩ

Les mesures ne dépassant pas 100 GΩ peuvent se faire sans prendre de précautions particulières à condition que les conducteurs d'essai soient relativement propres et secs. Le cas échéant, vous pouvez vous servir du conducteur de protection pour éliminer les effets dûs au courant de fuite en surface. Le ***S1-5005*** peut effectuer des mesures jusqu'à un maximum de 5 TΩ et un minimum de 0,01 nA (ce qui correspond à 500 TΩ sous 5 000 V). Lors de la mesure de résistances aussi élevées, il ne faut pas que les conducteurs d'essai se touchent ou entrent en contact avec un autre objet car cela créerait des trajetsde courant de fuite. Il faut également éviter les points affûtés au niveau des connexions du conducteur d'essai afin de ne pas encourager une décharge à effet corona.

Conditionnement de la Défaillance (Claquage)

Le mode de claquage met hors circuit le détecteur de **'BREAKDOWN'** (Panne) et l'indicateur lumineux et permet par conséquent d'effectuer des essais en continu en présence de

Fonctionnement

conditions de pannes, avec un courant nominal de 5 mA.

1. En utilisant les touches de Plage ▲▼ , placez le curseur de droite sur '**BURN**'.
2. En utilisant les touches de Sélection ▲ ▼, placez le curseur de gauche sur la tension de test requise.
3. Lancez cet essai en appuyant pendant au moins 1 seconde sur le bouton d'essai rouge.
4. Si une panne complète ne se produit pas, la valeur mesurée finale vient s'afficher de manière séquentielle et s'accompagne du courant de fuite correspondant ainsi que de la capacité. Cet affichage séquentiel se reproduit jusqu'à ce que l'opérateur appuie sur une touche ou jusqu'à ce que la mise hors tension automatique se déclenche.

⚠ **Note:-** dans ce mode, la défaillance du circuit et les parasites connexes de bruit peuvent provoquer une interruption de ces opérations et peuvent même entraîner la perte de l'affichage **alors que le circuit reste sous tension**. Dans ce cas, il est important d'attendre que le circuit se décharge avant de toucher des connexions. Le cas échéant, mettez l'instrument hors tension puis remettez-le sous tension afin de rénitialiser l'affichage.

Indicateurs de condition et d'avertissement

FS2
Le fusible **FS2** implanté dans le logement du chargeur protège le circuit de protection contre les impédances faibles en empêchant toute application d'une tension externe. La défaillance de ce fusible est signalée sur l'écran d'affichage uniquement pendant le fonctionnement du circuit de protection. Pour vérifier si ce fusible a sauté, branchez la borne positive sous la borne de protection et lancez un essai à 500 V. Si le curseur d'affichage **FS2** clignote, cela confirme que ce fusible a sauté. Si ce curseur clignote alors que le conducteur de protection n'est pas branché, cela indique la défaillance d'une des piles ou d'un fusible de pile (qui n'est pas accessible depuis l'extérieur). Cet instrument peut fonctionner lorsque cette condition est présente, mais la durée de fonctionnement entre deux charges est réduite, aucune valeur de capacitance ne vient s'afficher et aucun avertissement n'apparaît à la suite d'une rupture ultérieure du fusible de protection.

BREAKDOWN
Si une panne se produit entre les conducteurs d'essai, le test en cours s'interrompt et le curseur **'BREAKDOWN'** clignote. La sélection du mode **'BURN**' désexcite l'indicateur d'avertissement **'BREAKDOWN'**.

⚠ **Tension Exterieure**
Un curseur clignotant sous l'étiquette '**EXT VOLT**' ainsi qu'un DEL clignotant sur le devant de l'instrument et aussi un symbole de haute tension clignotant indiquent que le voltmètre lit une tension dangereuse provenant d'une source extérieure. Le voltmètre indiquera une tension c.c positive ou négative ou une tension c.a.

NOISE
Si des parasites externes (normalement un courant de ronflement à 50 ou 60 Hz) sont excessifs (>2 mA à 5 kV), les essais en cours s'interrompent et le curseur sous l'étiquette '**NOISE**' se met à clignoter.

LAST TEST
Ce curseur clignote dès qu'un essai est terminé et dès que la séquence répétitive des résultats finaux a été obtenue.

Numéros d'erreurs
La présence de défauts et erreurs internes provoque l'affichage à l'écran de la lettre **'E'** suivie d'un nombre. Ces numéros d'erreurs sont conçus pour faciliter le diagnostic interne mais peuvent également être déclenchés en présence de parasites électromagnétiques très importants. Les numéros d'erreurs **E5** et **E11** signalent la mesure d'un courant négatif.

Erreurs de calibrage
Lors de la mise sous tension, la vérification du calibrage ajuste automatiquement le circuit de mesure par rapport à une tension et une résistance interne. Cette séquence de calibrage ne se termine que lorsque le circuit de mesure fournit des résultats homogènes qui se maintiennent dans des limites prédéterminées.
Si l'écran de mise en route reste bloqué sur la vérification des segments ou s'arrête en affichant le mot '**CAL'**, cela indique que le calibrage a échoué.

Transfert de données

Prise femelle RS232
Cette prise RS232 est isolée sur le plan optique de tous les autres circuits du ***S1-5005.*** Par conséquent, vous pouvez brancher sans problème un ordinateur sur cette prise pendant le déroulement d'essais. Le retrait du couvercle pare-poussières en plastique fait apparaître la prise femelle RS232, sans affecter la classification IP54 de cet instrument. Cependant, nous recommandons de remettre en place ce couvercle après chaque utilisation pour réduire les risques de corrosion des broches de contacts. Les résultats des essais sont transmis à ces prises toutes les 5 secondes à la vitesse de 9 600 bauds et sous le format ASCII délimité par des virgules. Le programme de transfert (**BM25 DOWNLOAD**) qui équipe votre instrument est en mesure de recevoir ces données.

Installation du programme
La procédure d'installation du programme de transfert **BM25 DOWNLOAD** sur le disque dur de votre ordinateur personnel ne s'effectue qu'à une seule reprise. Vous ne devez la recommencer que si vous souhaitez transférer votre exemplaire de ce programme sur un autre ordinateur. Ce programme tourne en **DOS** version 3.2 ou plus récente et a besoin d'au moins 1 Mo de mémoire. La plupart des ordinateurs personnels modernes respectent ces critères. Introduisez la disquette dans votre lecteur puis, après la commande **DOS C:\>**, tapez:

A:Install A: C: <appuyez sur ENTRER>

Cela crée un répertoire appelé ***BM25*** sur votre disque dur et recopie le programme sur votre lecteur, depuis la disquette, dans ce répertoire. Si vous souhaitez employer un lecteur de disquette autre que **A**, remplacez la lettre **A** par celle que vous utilisez pour le lecteur souhaité.

Branchement de l'instrument sur un ordinateur personnel
Branchez une extrémité du câble à 9 broches sur la prise mâle RS 232 qui se trouve à l'avant de cet instrument et l'autre extrémité sur un port en série (COM) de votre ordinateur personnel. Notez soigneusement le port que vous avez sélectionné sur votre ordinateur personnel.

Exécution du programme
Pour que ce programme soit réalisable, le logiciel a besoin du mot de commande **BM25 DOWNLOAD** suivi de 2 paramètres. Ces paramètres sont les suivants:

- l'identification du port COM de votre ordinateur personnel (entre **0** et **4)**
- le format de sauvegarde des données, à savoir dans un fichier tableur ou non.

  1 = tableur (.wks) **0** = pas de fichier tableur.

Par exemple, si vous comptez utiliser le port numéro 1 de votre ordinateur personnel, le premier chiffre après le mot de commande **Bm25LOAD** doit être un **1** (précédé d'un espace).

Si vous souhaitez sauvegarder les données de mesure sous le format tableur, le deuxième chiffre après le mot de commande **Bm25LOAD** doit être un **1** (de nouveau précédé d'un espace). Sinon, vous devez utiliser le chiffre **0**.

Exemple : tapez : **BM25 DOWNLOAD 1 1** (Notez l'espacement entre les paramètres).

Vous devez exécuter ce programme avant de mettre sous tension le ***S1-5005***.

Pour lancer le programme à partir de la commande **C:**,

1. Tapez **CD\BM25** puis appuyez sur <ENTRER>. La commande au niveau du curseur devient **C:\BM25**
2. Tapez le mot de commande **BM25 DOWNLOAD** suivi d'un espace puis d'un **paramètre** puis d'un autre espace et enfin d'un deuxième **paramètre**.
3. Lorsque le logiciel tourne, la couleur à l'écran vire au bleu et un écran d'acheminement de fichier apparaît. Si vous n'avez pas sélectionné le format Fichier tableur, seul un nom de fichier apparaît.

Lors de chaque exécution du programme, le nom et l'acheminement passent de manière implicite sur **C:\BM25\loaded.dat**. Vous pouvez saisir un nouveau nom d'acheminement de fichier en le tapant par surimpression sur le nom implicite. Utilisez les touches ≠ pour passer à l'entrée suivante. Si vous avez sélectionné le format Fichier tableur (c'est-à-dire **1**) vous pouvez changer par surimpression le nom du fichier implicite chargé. Faîtes très attention de ne pas supprimer ou modifier **.wks**.

4. Une fois ces activités terminées, appuyez sur <ENTRER> pour passer au regard de transfert.
5. Le ***S1-5005*** peut maintenant être mis en route en pressant le bouton Marche/Arrêt une fois. A la fin des vérifications de calibrage, la version de logiciel apparaîtra dans la fenêtre de transfert.

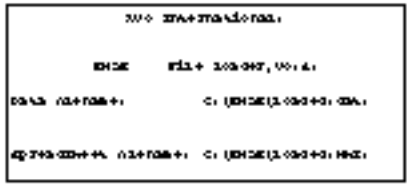

Nota: si l'instrument n'a pas pu être identifié pendant la période de calibrage, cela indique qu'il y a eu une erreur. Dans ce cas-là, mettez l'instrument hors tension, arrêtez le programme logiciel et vérifiez les connexions du conducteur à 9 broches. Remettez en route le logiciel, en vous assurant que vous avez bien saisi le port correct après la commande.

6. Programmez tous les paramètres requis d'essai ainsi que la durée sur le ***S1-5005***. Un essai de 90 minutes crée un fichier contenant environ 43 ko de données. Un fichier standard de données a une mémoire suffisante pour recevoir environ 9 essais de 10 minutes.
7. Pour lancer un essai et commencer un transfert, appuyez pen dant au moins 1 seconde sur le bouton rouge de démarrage. Un texte identifiant les réglages d'essai apparaît à l'écran (résistance en MΩ) et est suivides résultats mesurées à intervalles de 5 secondes.
8. Une fois l'essai terminé, le mot '**Finished**' apparaît à l'écran et est suivi de données mesurées en employant des unités scientifiques.
   Exemple: 5,108e + 04 = 5,108 MΩ x 10^4 = 51,08 GΩ

Nota: en général, les données transférées contiennent plus de chiffres significatifs que le résultat 'arrondi' qui vient s'afficher sur l'instrument.

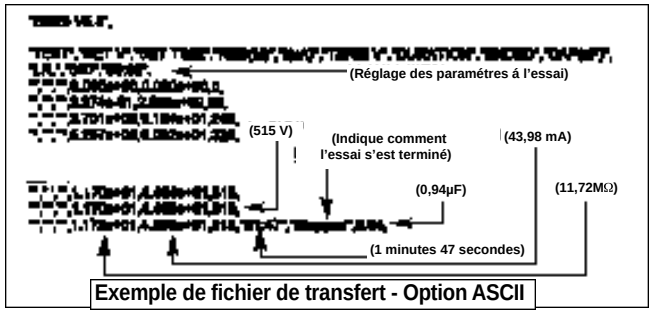

Exemple de fichier de transfert - Option ASCII

9. A la fin d'un chargement, un ou deux fichiers ont été créés à l'emplacement implicite ou spécifié. Vous pouvez importer ces fichiers dans différentes bases de données, sur des tableurs ou dans divers logiciels à graphiques. Consultez pour cela l'**Annexe 2**.

Nota : vous pouvez interrompre et lancer à tout moment un essai, sans affecter les données de transfert. L'interruption d'un essai avant la fin de la durée programmée, en appuyant sur la touche '**Ech**', entraîne la conversion des données existantes de ce test.

Annexe 1

Résultats affichees à la Fin de Chaque Test

Test IR
Durée implicite de test:- 30 minutes.

Minuterie	Indicateur Numérique	Indicateur de Tension
Durée du Test	Vide	Tension Final du Test
Durée du Test	R	Tension Final du Test
Durée du Test	I	Tension Final du Test
Durée du Test	µF	Tension Final du Test

Note:- Une lecture de valeur de capacitance n'est disponible que si le test s'est déroulé pendant plus d'une minute et si la lecture n'est pas en dehors des limites.

Test PI
La durée implicite du test est de 10 minutes. Arrêtez le test prématurément permet toutefois aux résultats du test d'être calculés et affichés.

Minuterie	Indicateur Numérique	Indicateur de Tension	Autres
Durée du Test T3	Vide	Tension Final du Test	
Temps T2	PI (T1 à T2)	Tension à Temps T2	Curseur PI Clignote
Temps T3	PI (T2 à T3)	Tension à Temps T3	Curseur PI Clignote
Temps T1	R à T1	Tension à Temps T1	
Temps T2	R à T2	Tension à Temps T2	
Temps T3	R à T3	Tension à Temps T3	
Temps T3	µF	Tension à Temps T3	

Note:- Une lecture de valeur de capacitance n'est disponible que si le test s'est déroulé pendant plus d'une minute et si la lecture n'est pas en dehors des limites.

Test DD
La durée implicite du test est de 30 minutes, suivie par une minute de durée de décharge. Arrêter le test prématurément permet toutefois aux résultats du test d'être calculés et affichés.

Minuterie	Indicateur Numérique	Indicateur de Tension	Autres
Durée du Test T3	Vide	Tension Final du Test	
Temps T3	Valeur DD	Tension à Temps T3	Curseur DD Clignote
Temps T3	R à temps T3	Tension à Temps T3	
Temps T3	I à T3 + 1 minute	Tension à Temps T3	
Temps T2	PI (T2 / T1)	Tension à Temps T2	Curseur PI Clignote
Temps T3	µF	Tension à Temps T3	

Note:- Une lecture de valeur de capacitance n'est disponible que si le test s'est déroulé pendant plus d'une minute et si la lecture n'est pas en dehors des limites.

Test SV
La durée implicite du test est de 5 minutes seulement. Arrêter le test prématurément permet toutefois aux résultats du test d'être calculés et affichés.

Minuterie	Indicateur Numérique	Indicateur de Tension
Durée du Test	Vide	Tension Final du Test
1,00 minute	R (à 1 minute)	Tension à 1 minute
2,00 minute	R (à 2 minutes)	Tension à 2 minute
3,00 minute	R (à 3 minutes)	Tension à 3 minute
4,00 minute	R (à 4 minutes)	Tension à 4 minute
5,00 minute	R (à 5 minutes)	Tension à 5 minute
Durée du Test	µF	Tension Final du Test

Note:- Une lecture de valeur de capacitance n'est disponible que si le test s'est déroulé pendant plus d'une minute et si la lecture n'est pas en dehors des limites.

Annexe 2

Exemples d'affichage d'informations transmises sur la sortie RS 232

TEST	SET V	SET TIME	RES(M)	I(uA)	TERM V	DURATION	ENDED	CAP(uF)
Leakage	2500	02:05						
			36860	0.07029	2591			
			44570	0.05813	2591			
			47850	0.05417	2592			
			49540	0.05232	2592			
			50260	0.05158	2592			
			53390	0.04856	2592			
			53710	0.04826	2592			
			53960	0.04804	2592			
			54220	0.04781	2592	02:05	Finished	0.01

Exemple de format de tableur

Entête	Type d'essai
IR	R
Fuite	I
Burn	Burn
DD	DD
PI	PI
SV	SV

Colonnes supplémentaires à la fin pour résultats spécifiques de tests DD et PI.

Exemple de format ASCII

```
"TEST","SET V","SET TIME","RES(M)","I(uA)","TERM V","DURATION","ENDED","CAP(uF)
"Leakage","2500","02:05",
"","","",3.686e+04,7.029e-02,2591,
"","","",4.457e+04,5.813e-02,2591,
"","","",4.785e+04,5.417e-02,2592,
"","","",4.954e+04,5.232e-02,2592,
"","","",5.026e+04,5.158e-02,2592,
"","","",5.339e+04,4.856e-02,2592,
"","","",5.371e+04,4.826e-02,2592,
"","","",5.395e+04,4.804e-02,2592,
"","","",5.422e+04,4.781e-02,2592,"02:05","Finished",0.01,
```

Réparation et Garantie

Les circuits de l'instrument contiennent des éléments sensibles à l'electricite statique et il y a lieu de prendre des précautions en manipulant la carte de circuits imprimes. Si la protection d'un instrument s'est trouvee affectée de quelque maniére il ne doit pas être utilisé et doit être expeedié pour réparation par du personnel convenablement formé et qualifié. La protection de l'appareil peut s'être trouvée endommagée si par exemple l'instrument apparaît visiblement abîmee, ne donne pas les performances attendues, s'est trouvé entreposé de façon prolongée dans des conditions défavorables ou a été exposé a des contraintes extrêmes durant son transport.

Les nouveaux instruments sont garantis pendant une période d'un an à partir de la date de leur achat par l'utilisateur.

Note: Toute réparation ou tout réglage préalable non autorisé invalidera automatiquement la garantie.

Réparation d'instruments et pièces de rechange
Pour le service des instruments ***MEGGER***® prendre contact soit:

avec	**ou**
AVO INTERNATIONAL	**AVO INTERNATIONAL**
Archcliffe Road	Valley Forge Corporate Center
Dover	2621 Van Buren Avenue
Kent CT17 9EN	Norristown
Angleterre	PA 19403 USA
Tél: 44+ (0) 1304 502234	Tél: +1 (610) 676-8579
Télécopie: 44+ (0) 1304 207342	Télécopie: +1 (610) 676-8625

ou avec une societe d'entretien agréée.

Societés d'entretien agréées
Un certain nombre de sociétés indépendantes de reparation d'instruments ont êté agréées pour faire des opérations de réparation sur la plupart des instruments ***MEGGER***® utilisant des pièces d'origine ***MEGGER***®. Consultez le distributeur désigné / agent officiel concernant la fourniture de pièces de rechange, les installations de réparation et pour être conseillé concernant les meilleures mesures à prendre.

Renvoi D'un Instrument Pour le faire Réparer
Si un instrument est réexpédiê au fabricant pour être reparé il doit être envoyé port payé a l'adresse appropriée. Un exemplaire de la facture et la note d'envoi doivent être envoyé par avion au même moment afin de hâter les formalités de douane. Un devis estimé des réparations indiquant les frais de réexpedition et autres frais sera si nécessaire adressé a l'expéditeur avant que les opérations de réparation ne soient enterprises.

HINWEISE ZUR BETRIEBSSICHERHEIT

- Die Sicherheitshinweise und Vorsichtsmaßnahmen beim Testen **müssen** gelesen und verstanden worden sein, bevor das Instrument in Betrieb genommen wird. Sie sind während der Benutzung des Instruments zu befolgen.
- Der zu testende Schaltkreis **muß** vor der Herstellung von Verbindungen abgeschaltet, energielos gemacht und isoliert werden.
- Das ***S1-5005*** kann bei 5000 V bis zu 5 mA erzeugen. Die Schaltkreisverbindungen dürfen bei Auswahl von HV (Hochspannung) nicht berührt werden.
- Vor dem Trennen der Testkabel **müssen** die Schaltkreise entladen werden.
- Unter bestimmten Bedingungen kann ein Zusammenbruch des zu testenden Schaltkreises dazu führen, daß das Instrument den Test abbricht und die Anzeige möglicherweise gelöscht wird, obwohl der Schaltkreis erregt bleibt. In diesem Fall muß vor dem Berühren irgendwelcher Verbindungen der Schaltkreis energielos gemacht und das Instrument abgeschaltet werden.
- Der Anschlußklemmenbereich und die Ladeanschlußvertiefung **müssen** sauber und trocken gehalten werden.
- Als Ersatzsicherungen dürfen nur Sicherungen der korrekten Art und Leistung verwendet werden.
- Das Instrument darf nicht benutzt werden, wenn irgendein Teil beschädigt ist.
- Weitere Erläuterungen und Vorsichtsmaßnahmen finden Sie unter Vorsichtsmaßnahmen beim Testen auf Seite 56.

HINWEIS

DAS INSTRUMENTDARF NURVON ENTSPRECHENDAUSGEBILDETEN UND BEFÄHIGTEN PERSONEN EINGESETZT WERDEN.

Inhalt

User Guide - p2 **Guide de l'utilisateur - p30** **Guía del usuario - p70**

Hinweise zur Betriebssicherheit 50
Allgemeine Beschreibung 52
Übersicht über die Testverfahren 53
Einrichtungen und Regler 54
Laden der Batterie 55
Betrieb
Vorsichtsmaßnahmen beim Testen 56
Durchführung von tests - Allgemeines 57
Testverfahren
Testen des Isolationswiderstands (**R**) 58
Prüfstrommessung **(I**) 58
Testen des Polarisationsindexs (**PI**) 58
Testen der dielektrischen Entladung (**DD**) 59
Testen mit Spannungsstufen (**SV**) 59
Werkseinstellungen 60
Benutzerspezifische Zeitwerte für den PI-Test 60
Benutzerspezifische Zeitwerte für den DD-Test 60
Einstellen der benutzerspezifischen Zeitwerte 60
Verwendung desAbleitanschlusses 61
Messungen oberhalb 100 GΩ 61
Störungszustand (BURN) 61
Zustands- und Warnanzeigen 62
Datenübermittlung 63
Anhang 1 65
Anhang 2 67
Reparaturen und Garantie 68

Auf dem Gerät verwendete Symbole

In Bedienungsanleitung nachsehen.

Elektroschockgefahr.

Gerät geschützt mit durchgängiger Doppelisolierung (Klasse II).

Gerät entspricht den gegenwärtigen Richtlinien der EU.

Allgemeine Beschreibung

Das ***S1-5005*** ist ein kompaktes, batteriebetriebenes, automatisch arbeitendes Hochspannungsinstrument zur Durchführung von Polarisationsindex-, Spannungsstufen-, dielektrischen Entladungs- und Punktisolationstests. Das ***S1-5005*** kann Widerstände bis 5 TΩ messen, die Kriechstrommessung ermöglicht das Messen von Widerständen bis 500 TΩ.

Bei der Konstruktion des Instruments, das eine große, deutlich erkennbare Flüssigkristallanzeige mit Analog- und Digitaldarstellung des Isolationswiderstands aufweist, werden die Vorteile der Mikroprozessortechnologie genutzt.

Voreingestellte Nennspannungen von 500 V, 1000 V, 2500 V und 5000 V können ausgewählt werden. Die Ausgangsspannung ist in Stufen von 25 V im Bereich 25 V bis 5000 V veränderlich.

Nach dem Einschalten führt das Instrument einen Kalibrierungs-Selbsttest aus, bei dem das Meßsystem automatisch justiert wird. Die Kalibrierungssequenz unterbindet den Einsatz jeglicher Testfunktionen, wenn das Meßsystem den voreingestellten Grenzwerten nicht entspricht.

Zu Beginn eines Tests blinkt die HV-Warn-LED an der Gerätevorderseite auf und am Display werden die Hochspannungssymbole angezeigt. Die integrierte Zeituhr startet automatisch und zeigt die seit dem Testbeginn vergangenen Minuten und Stunden an. Die Zeituhr kann zur Voreinstellung der Testdauer verwendet werden, so daß die Ausgangsspannung nach Ablauf der eingestellten Zeit automatisch abgeschaltet wird.

Während eines Tests werden alle 5 Sekunden über eine isolierte Glasfaserleitung Meßergebnisse an die RS232-Schnittstelle geschickt, von dar aus die Datenüberteragung zu einem Computer möglich ist.
Die Batteriekapazität wird fortlaufend von einer Reihe von Feldern angezeigt, die zu blinken beginnen, wenn die Batterie geladen werden muß. Der Strom wird von zwei parallel geschalteten Bleisäurebatterien bezogen. Falls eine Batterie ausfällt (oder eine interne Schutzsicherung durchbrennt), arbeitet das Instrument mit der anderen Batterie weiter. Die Batterie wird von externen Stromquelle von 95 bis 265 V Wechselspannung, 50 bis 60 Hz oder 12 V Gleichspannung aufgeladen.

Die Ladeanschlüsse, die Netzstromanzeige und die Schutzsicherungen des Instruments befinden sich in einer spritzwassergeschützten Vertiefung an der Vorderseite.

Die Abdeckung kann aufgrund speziell konstruierter Scharniere je nach Bedarf abgenommen oder wieder aufgesetzt werden, so daß sie vor übermäßiger Beanspruchung oder Beschädigung durch selbsttätiges Lösen geschützt wird, wenn sie versehentlich zu weit geöffnet wird.

Das Instrument hat folgende Sicherheitseinrichtungen:

- Die blinkende Hochspannungs-Warn-LED an der Gerätevorderseite sowie die blinkend angezeigten Hochspannungssymbole weisen den Benutzer darauf hin, daß beim Testen gefährliche Hochspannung anliegt.
- Externe Spannungen >50 V werden mit blinkenden Hochspannungssymbolen am Display angezeigt.
- Die Last wird bei Beendigung des Tests automatisch entladen, und der Spannungsabfall (>50 V) wird angezeigt.
- Verriegelter Schiebedeckel unterbindet gleichzeitigen Zugang zu den Lade- und Testanschlüssen.
- Die Testanschlußbuchsen verriegeln die Testkabel im Gehäuse und unterbinden versehentliches Trennen.

Übersicht über die Testverfahren

Testen des Isolationswiderstands (R)
Mit diesem Verfahren wird der Isolationswiderstand bei der gewählten Spannung zur sofortigen Anzeige eines Punktmeßwerts gemessen. Das endgültige Testergebnis wird sequentiell zusammen mit dem zugehörigen Reststrom- und Kapazitâtswertr angezeigt.**Prüfstrommessung (I)**
Mit diesem Modus wird die Isolation bei der gewählten Spannung gemessen und ein sofortiger Punktmeßwert wird ausgegeben, dabei wird der Kriechstrom am digitalen Display angezeigt. (Bitte beachten Sie: Die Analogskala zeigt stets den Widerstand an.) Das endgültige Testergebnis wird sequentiell mit dem entsprechenden Widerstands- und Kapazitätswert angezeigt.

Testen des Polarisationsindexes (PI)
Mit dem Begriff Polarisationsindex wird das dielektrische Absorptionsverhältnis bezeichnet, wenn der Isolator einem Isolationswiderstandstest unterzogen wird, wobei der Widerstand nach der Zeit **T1** (Standardeinstellung: 1 Minute) und erneut nach der Zeit **T2** (Standardeinstellung: 10 Minuten) gemessen wird. Der Polarisationsindex wird automatisch berechnet aus dem Widerstandsmeßwert nach **T2** dividiert durch den Widerstandsmeßwert nach **T1**. Eine hohe dielektrische Absorption wird durch einen hohen **PI**-Wert angezeigt. Das endgültige Testergebnis wird sequentiell mit dem entsprechenden Kriechstrom- und Kapazitätswert angezeigt. Der Test ist bei einer beliebigen Spannung möglich. Die Zeiteinstellungen für die **PI**-Werte können bei Bedarf geändert werden (siehe '**Benutzerspezifische Zeitwerte für den PI-Test**'.

Testen der dielektrischen Entladung (DD)
Mit diesem Modus wird die dielektrische Absorption eines zu prüfenden Artikels gemessen, wobei die Auswirkungen von parallelen Oberflächenkriechstromstrecken vernachlässigt werden. Die Standardeinstellung für die Testdauer beträgt 20 Minuten mit anschließender einminütiger Entladung. Die endgültigen Testergebnisse werden sequentiell mit dem entsprechenden PI-Wert, Widerstands- und Kapazitätswert angezeigt. Die Zeiteinstellungen für die **DD**-Werte können bei Bedarf geändert werden (siehe '**Benutzerspezifische Zeitwerte für den DD-Test**').

Testen mit Spannungstufen (SV)
Dieser 5 Minuten dauernde Test unterliegt dem Prinzip, daß ein idealer Isolator bei allen Spannungen denselben Widerstandswert hat. Umgekehrt weist ein überlasteter Isolator bei höheren Spannungen geringere Widerstandswerte auf. Beim Testen mit 2,5 kV oder mit 5,0 kV wird die Spannung jede Minute um 20 Prozent gesteigert, und die Werte werden nacheinander gemessen. Nach Beendigung des Tests werden die fünf Ergebnisse sequentiell und anschließend der Kapazitätswert angezeigt.

Störungsbehebung (BURN
Diese Niederstromeinrichtung wird zum fortlaufenden Testen unter Ausfallbedingungen genutzt.

Allgemeine Hinweise:
1) Ein Kapazitätswert wird nur angezeigt, wenn der jeweilige Test mehr als eine Minute dauert und der Wert innerhalb des Meßbereichs liegt.
2) Interne Entladungswiderstände werden automatisch gewählt, und zwar:
   - am Ende eines Tests;
   - beim Abschalten des Instruments;
   - wenn ein interner Fehler festgestellt wird.

Die nach Abschluß eines Tests an den Anschlußklemmen noch anliegende Spannung wird solange angezeigt, bis sie unter 50 V abgefallen ist. Während eines Tests werden die Ausgangsklemmenspannung sowie die blinkenden Hochspannungssymbole angezeigt und die rote LED blinkt.

Einrichtungen und Regler

Spritzwassergeschützte vertiefungsabdeckung
Zurückschiebbar für Zugang zu den Netzspannungs-
anschlüssen, den batterieladeansch-lüssen und den Schutzsicherungen.

Spannungsanzeige
Zeigt die Testspannung oder externe Spannung >50 V zusammen mit blinkenden Hochspannungs symbolen an.

Linke Anzeigemarke
Zeigt die gewählte Spannung oder die Zeituhr an.

Zeitanzeige - Zeigt die eingestellte Testdauer und die während des Tests abgelaufene Zeit an.

HV-Warnung - Blinkt während eines Tests oder wenn gefährliche Hochspannung anliegt.

On/Off Taste
Durch Drücken dieser Taste wird das Gerät ein- und ausgeschaltet. (Warten Sie nach dem Einschalten einige Sekunden, bis die automatische Kalibrierung erfolgt ist.)

Wähltasten
1) Spannungseinstellung
2) Zeiteinstellung

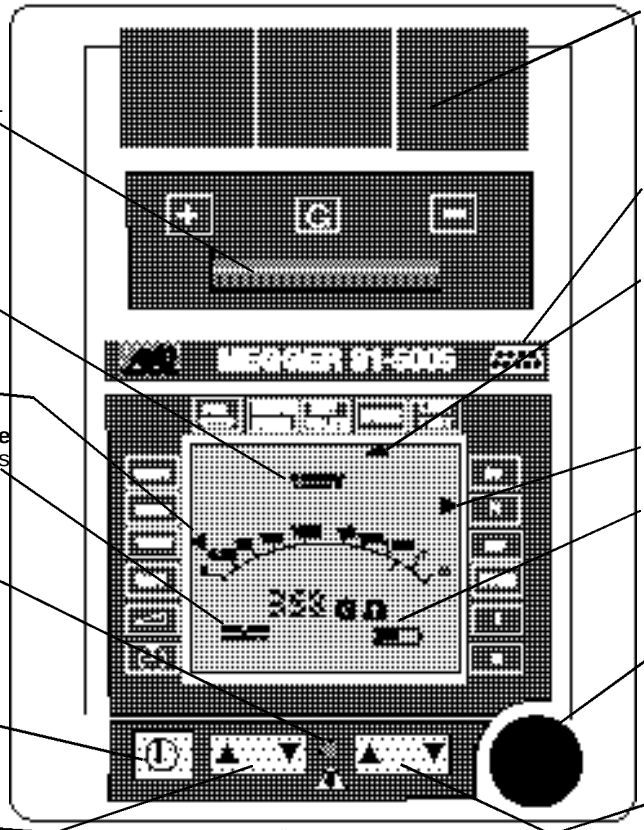

Anschlußklemmenabdeckungen
Können einzeln zwecks Zugang zu den Testkabelanschlüssen angehoben werden. Abdeckungen sind durch die verschiebbare ertiefungsabdeckung gegeneinander verriegelt.

RS232C-Buchse
Sendet alle 5 Sekunden Testergeb-nisse zur Weiterleitung an einen PC

Zustands- und Warnanzeigen
Blinken, um den Test beeinflussende Störungsbedingungen zu melden, und wenn die Ergebnisse des letzten Tests sequentiell angezeigt werden.

Rechte Anzeigemarke Zeigt ge-wähltes Testverfahren an.

Batteriekapazitätsanzeige Die Segmente verlöschen nacheinander mit nachlassender Batteriekapazität. Symbol blinkt, wenn Kapazität extrem gering

Testtaste Zum Einleiten eines Tests und zum Starten der Zeituhr mindestens eine Sekunde gedrückt halten. Zum Unterbrechen des Tests Taste erneut drücken.

Bereichstasten
1) Wahl des Testverfahrens;
2) Justieren der variablen Spannung;
3) Einstellen der Zeituhr
   - max. 90 Minuten

ERLÄUTERUNG

BREAKDOWN	-	ZUSBRUCH
NOISE	-	RAUSCHEN
LASTTEST	-	LETZER TEST
BURN	-	ABBRAND

Laden der Batterie

Allgemeines
Es empfiehlt sich, die Batterie vor dem ersten Einsatz des Instruments vollständig aufzuladen. Das Aufladen erfolgt entweder mit externem Netzwechselstrom oder mit 12 Volt Gleichstrom. Zum Aufladen der Batterie durch ein Fahrzeug ist ein Ladekabel mit Stecker für Zigarettenanzünder lieferbar. Während des Ladens können keine Tests durchgeführt werden.

Aufladen mit Netzstrom
Für das Aufladen der Batterie mit Netzstrom ist eine Wechselspannung von 95 bis 265 V mit 50 bis 60 Hz erforderlich. Trennen Sie die Testkabel, und schließen Sie das Netzkabel an den Verbinder IEC 320 in der Ladeanschlußvertiefung an. Achten Sie darauf, ob die rote Ladeanzeige leuchtet. Das Laden erfolgt automatisch, sobald die Netzspannung angeschlossen ist. Das vollständige Laden der Batterie dauert ungefähr 16 Stunden. Eine vollkommen entladene Batterie ist nach acht Stunden Ladezeit zu mindestens 90 Prozent aufgeladen. Schalten Sie das Instrument ein, und lesen Sie den Ladezustand an der Batteriekapazitätsanzeige ab.

Aufladen mit 12V-Gleichstrom
Dieses Ladeverfahren sollte nur verwendet werden, wenn keine Netzstromquelle verfügbar ist, da es länger dauert und weniger wirkungsvoll ist. Wenn ein Fahrzeug als Stromquelle benutzt wird, sollte während des Ladens der Fahrzeugmotor laufen. Verbinden Sie die 12V-DIN-Buchse unter Beachtung der Polung mit der externen 12V-Quelle, und schalten Sie ein.
Vorsicht: Wenn mehr als 15 Volt an diese Steckdose angelegt werden, wird die Batterie überladen.

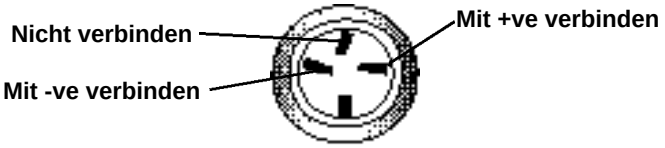

12V-DIN-Buchse (von der Vorderseite aus gesehen)

Hinweise zum Aufladen der Batterie

1) Belassen Sie die Batterie **nicht** in vollständig entladenem Zustand. Häufiges Aufladen bis zum vollen Ladezustandverlängert die Lebensdauer der Batterie.
2) Das Aufladen der Batterie sollte in trockener Umgebung erfolgen (Schutzklasse IP54 nur bei verschlossener Lade abdeckung).
3) Beim Laden der Batterie in geschlossenen Räumen für gute Belüftung sorgen.
4) Die Batterie nur bei Umgebungstemperaturen von 0°C bis 40°C laden.
5) Es empfiehlt sich, die Batterie dauernd zu laden, und die Batterie nimmt keinen Schaden, wenn das Ladegerätständig eingeschaltet bleibt.
6) Wenn das Instrument längere Zeit nicht benutzt wird muß die Batterie alle sechs Monate (und häufiger bei Umgebungstemperaturen über 40°C) mindestens 24 Stunden lang aufgeladen werden.

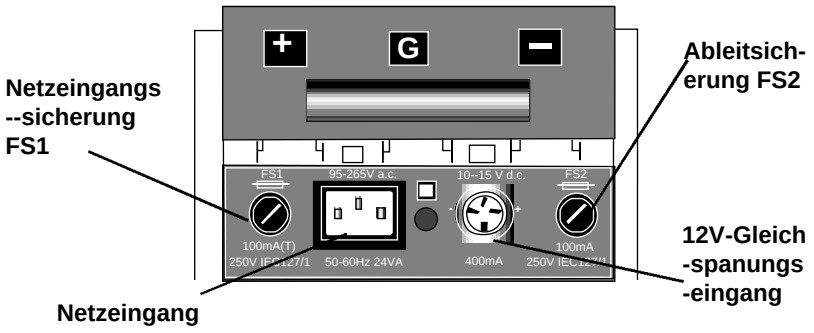

Betrieb

Vorsichtsmaßnahmen beim Testen

Der zu testende Schaltkreis **muss** vollständig energielos gemacht und isoliert werden, **bevor** die testverbindungen hergestellt werden.

1. Das Instrument darf nur von entsprechend ausgebildeten und befähigten Personen eingesetzt werden.
2. Während eines Tests dürfen Schaltkreisverbindungen **Nicht Berhürt** werden.
3. Das ***S1-5005*** kann Stromschläge verursachen. Schaltkreise mit hoher Kapazität (z.B. lange Kabel), die unter hoher Spannung von mehreren Kilovolt stehen, können potentielltödliche Stromschläge verursachen.
4. Achten Sie darauf, daß kapazitive Schaltkreise während eines Tests nicht getrennt werden, da der betreffende Schaltkreis dann in geladenem Zustand verbleibt.
5. Das Voltmeter und die automatische Entladevorrichtung des ***S1-5005*** sollten als zusätzliche Sicherheitseinrichtungen und **Nicht Als Erzatz** für die üblichen Vorsichtsma ßnahmen zur Arbeitssicherheit verstanden werden.
6. Wenn längere Tests unbeaufsichtigt durchgeführt werden, sollte dafür gesorgt werden, daß keine Verletzungen oder Schäden verursacht werden können.
7. Wenn das Verfahren **'BURN'** benutzt wird, sollte dafür gesorgt werden, daß keine Verletzungen oder Schäden verursacht werden können.
8. Unter bestimmten Bedingungen kann ein Zusammenbruch des zu testenden Schaltkreises dazu führen, daß das Instrument den Test abbricht und die Anzeige möglicherweise gelöscht wird, obwohl der Schaltkreis erregt bleibt. In diesem Fall muß vor dem Berühren irgendwelcher Verbindungen der Schaltkreis energielos gemacht und das Instrument abgeschaltet werden.
9. Das ***S1-5005*** hat die Umweltschutzklassifizierung IP54, derzufolge die Abdeckung der Ladeanschlußvertiefung fest geschlossen ist. Aus Sicherheitsgründen (und zur Vermeidung unerwünschter Kriechströme) sollte deshalb gewährleistet werden, daß der Bereich der Testanschlüsse und die Ladeanschlußvertiefung frei von Schmutz und Feuchtigkeit gehalten werden.
10. Vor dem Einsatz **muss** jegliches auf der Oberfläche und vor allem an den Testkabelbuchsen vorhandene Wasser entfernt werden.
11. Beim Auswechseln von Sicherungen **Dürfen Nur** solche der korrekten Art und Leistung verwendet werden. Für Einzelheiten über die Sicherungstypen vgl. 'Specification'.
12. Falls irgendein Teil des Instruments Schäden aufweist, darf das Instrument **nicht** benutzt werden, sondern sollte anden Hersteller oder eine geeignete Reparaturfirma geschickt werden.
13. Verwenden Sie keinen Adapter, falls der Stecker des Netzkabels nicht in Ihre Netzsteckdose paßt. Verwenden Sie stattdessen ein geeignetes Netzkabel, oder montieren Sie unter Beachtung der üblichen Sicherheitsvorkehrungeneinen passenden Netzstecker am Kabel.

	Euro	**USA**
Erde	Gelb/Grün	Grün
Nulleiter	Blau	Weiß
Phase	Braun	Schwarz

Durchführung von tests - Allgemeines

1. Schalten Sie das ***S1-5005*** durch einmaliges Drücken der Taste '**Ein/Aus'** ein. Daraufhin leuchten alle Flüssigkristallanzeigen 5 Sekunden lang auf, und anschließend wird 5 Sekunden langdas Wort **'CAL'** angezeigt. Wenn **'CAL'** verlischt, ist das Instrument betriebsbereit und befindet sichin Wartebereitschaft.

Hinweis: Wenn kein Test durchgeführt wird und das Instrument sich in Wartebereitschaft befindet, fungiert das ***S1-5005*** als Voltmesser (50 bis 1000 V).

2. Achten Sie darauf, daß alle Testkabel sauber sind und sich in gutem Zustand befinden, und schließen Sie sie an den zu testenden **isolierten** Schaltkreis an.

   Wenn eine externe Spannung >50 V festgestellt wird, so wird diese Spannung zusammen mit dem blinkenden Hochspannungssymbol angezeigt.

3. Stellen Sie die rechte Anzeigemarke mit den Bereichstasten auf die gewünschte Testart.

4. Wenn eine andere als die vorgegebene Testdauer gewählt werden soll, muß die linke Anzeigemarke mit den Auswahl hltasten auf die Zeituhrposition zur Steigerung der Testdauer mit den Bereichstasten gestellt werden. Einstellung auf Null unterbindet alle Tests (die maximale Testdauer beträgt 90 Minuten).

5. Stellen Sie mit den Auswahltasten die gewünschte Spannung ein. Die Position für variable Spannung ermöglicht die Einstellung einer nicht dem Standard entsprechenden Gleichspannung zwischen 25 und 5000 V dc oder die fortlaufende Änderung der Spannung während des Tests in Stufen von 25 V. Stellen Sie die linke Anzeigemarke auf die Position für variable Spannung, und stellen Sie die Spannung an den usgang sanschlüssen mit den Bereichstasten ein. Die Spannung wird an der Oberseite der Anzeige angegeben. Wenn das Instrument auf variable Spannung eingestellt ist, kann die Testart nicht geändert werden.

Hinweis: Wenn die Spannung während eines Tests geändert wird, ändert sich vorübergehend das angezeigte Ergebnis. Wenn die neue Spannung über eine volle Abtastperiode (üblicherweise 5 Sekunden) stabil bleibt, bleibt der angezeigte Wert unverändert.

6. Sie starten einen Test, indem Sie die rote Testtaste mindestens 1 Sekunde lang gedrückt halten. Die blinkende rote LED sowie die blinkend angezeigten Hochspannungssymbole weisen darauf hin, daß ein Test läuft.

7. Wenn resisitive oder mäßig kapazitive Last (bis ungefähr 1 µF) getestet wird, erscheint die Testspannung innerhalb weni ger Sekunden. Die Testspannung wird innerhalb 5 Prozent des Nennwerts geregelt und justiert sich entsprechend den Veränderungen des Widerstands. Während des Tests wird die tatsächliche Ausgangsspannung angezeigt. Bei hohen kapazitiven Lasten steigt die Spannung deutlich langsamer an, und bei geringen Widerständen (weniger als 10 MΩ) steigt die Spannung eventuell niemals auf ihren Nennwert an.

8. Die Werte von Isolationswiderständen werden bei Messungen bis ungefähr 100 MΩ einmal pro Sekunde nachgemes sen. Bei Messungen zwischen 1 GΩ bis unendlich verlang samt sich die Musterhäufigkeit auf 20 Sekunden.

9. Ein Test kann jederzeit von Hand durch Drücken der roten Testtaste abgebrochen werden. Ein Test wird automatisch abgebrochen, wenn:

   - die eingestelle Testzeit abgelaufen ist;
   - die zu testende Isolierung vollständig zusammenbricht;
   - übermäßigeselektrisches Rauschen (>2 mAbei 5 kV) auftritt;
   - die Batterie erschöpft ist;
   - Sicherung FS2 durchbrennt;
   - eine interne Störung auftritt.

Wenn der Test abgebrochen worden ist, wird der gerade getest ete Schaltkreis automatisch entladen.

10. Schalten Sie das Instrument durch einmaliges Drücken der Taste **'On/Off'** einmal. Nach 10 Minuten Inaktivität in den Betriebsarten **'R', 'I'** und **'Burn'** und nach 30 Minuten Inaktivität in den Betriebsarten **'DD', 'PI'** und **'SV'** schaltet das Instrument sich automatisch ab.

Betrieb

Testverfahren

Testen des Isolationswiderstands (R)

Bei diesem Testverfahren wird der Isolationswiderstand kontinuierlich mit der gewählten Spannung gemessen. Die maximal erzielbaren, digital angezeigten Werte betragen 500 GΩ bei 500 V und 5 TΩ bei 5000 V; über diesen Werten kann mit einer Verschlechterung der angegebenen Meßgenauigkeit gerechnet werden. Die Analoganzeige funktioniert jedoch bis 1 TΩ unter allen Spannungsbedingungen.

Testen des Isolationswiderstands(R)

1. Setzen Sie die rechte Anzeigemarke mit den ▲ ▼ Bereichstasten auf '**R**'.
2. Bestätigen Sie die Standardeinstellung von 30 Minuten oder setzen Sie die linke Anzeigemarke mit den ▲▼ Wähltasten auf die Zeituhrposition und stellen Sie dann mit den ▲ ▼ Bereichstasten die Testdauer ein. Die maximale Testdauer beträgt 90 Minuten.
3. Setzen Sie die linke Anzeigemarke mit den ▲ ▼ Wähltasten auf die gewünschte Testspannung.
4. Beginnen Sie den Test, indem Sie die rote Testtaste min destens eine Sekunde lang gedrückt halten.
5. Wenn der Test abgeschlossen ist, wird der letzte Widerstands dsmeßwert sequentiell zusammen mit dem zugehörigen Kriechstrom und, soweit verfügbar, dem Kapazitätswert angezeigt. Diese sequentielle Anzeige wird solange wiederholt, bis eine Taste gedrückt wird oder die automatische Abschaltung erfolgt. Für weitere Einzelheiten über die Informationen der abschließenden Anzeige vgl. **Anhang 1**.

Prüfstrommessung (I)

Dieses Testverfahren mißt fortlaufend die Isolation mit der gewählten Spannung, meldet jedoch den Kriechstromwert anstelle des Widerstandswertes. Dies ermöglicht das Ablesen noch höherer Widerstände, wobei jedoch beachtet werden muß, daß die Meßgenauigkeit abnimmt, wenn der Kriechstromwert sich gegen Null bewegt. Dieses Verfahren ermöglicht theoretisch die Messung von Widerständen bis zu 500 TΩ bei 5000 V, doch muß dazu eine Kalibrierung des offenen Schaltkreises durchgeführt werden, um den Verschiebestrom des Meßschaltkreises und den Kriechstrom des Meßkabels zu ermitteln (dieser beträgt bei neuen, sauberen Testkabeln unter normalen Temperaturbedingungen + 0,2 nA).

1. Setzen Sie die rechte Anzeigemarke mit den ▲ ▼ Bereichstasten auf '**I**' und verfahren Sie weiter wie beim Testen des Isolationswiderstands (**R**).
2. Nach Beendigung des Tests wird der abschließende Kriechs tromwert sequentiell zusammen mit dem Widerstands- und, soweit verfügbar, dem Kapazitätswert angezeigt. Diese sequentielle Anzeige wird solange wiederholt, bis eine Tasteed rückt wird oder die automatische Abschaltung erfolgt. Für weitere inzelheiten über die Informationen der abschlie ßendenAnzeige vgl. **Anhang 1**.

Testen des Polarisationsindexs (PI)

Als Polarisationsindex wird die dielektrische Absorptionsrate bez eichnet, wenn die Widerstandswerte nach 1 Minute und erneut nach 10 Minuten gemessen werden. Der Test läuft unter jeglicher Spannung. Die vorgegebene Testdauer beträgt 10 Minuten, kann jedoch bei Bedarf geändert werden. Die Dauer wird auf den vorgegebenen Wert zurückgestellt, wenn die Anzeigemarke von der Position '**PI**' fortbewegt wird. Das Isoliermaterial wird einem Isolationswiderstandstest von 10 Minuten Dauer unterzogen. Der Polarisationsindex wird demnach ermittelt, indem der nach 10 Minuten gemessene Widerstandswert durch den nach 1 Minute gemessenen Widerstandswert geteilt wird.

1. Setzen Sie die rechte Anzeigemarke mit den ▲ ▼ Bereichstasten auf '**PI**'.
2. Setzen Sie die linke Anzeigemarke mit den ▲ ▼ Wähltasten auf die gewünschte Testspannung.
3. Starten Sie den Test, indem Sie die rote Testtaste mindestens 1 Sekunde lang gedrückt halten.

4. Nach Beendigung des Tests wird das **PI**-Verhältnis angezeigt und anschließend die entsprechenden Widerstandswerte nach 1 Minute und nach 10 Minuten und, falls zutreffend, der Kapazitätswert.

5. An Stelle von einem benutzerdefinierten **T3** Wert wird am Display **- - -** angezeigt. Diese Sequenzanzeige wird solange wiederholt, bis eine Taste gedrückt wird oder bis sich das Instrument automatisch abschaltet.

Testen der dielektrischen Entladung (DD)
Dieser Test mißt die dielektrische Absorption eines Isolators und weist auf die Menge von absorbiertem Schmutz und Feuchtigkeit hin. Einstellungen sind 500 V und 30 Minuten, doch diese können bei Bedarf geändert werden. Die Einstellungen werden auf die Vorgaben zurückgestellt, wenn die Anzeigemarke von der Position **'DD'** fortbewegt wird. An den zu testenden Isolator wird, um einen stabilen Zustand zu erzielen, 30 Minuten lang eine Spannung von 500 V angelegt. Anschließend erfolgt eine Schnellentladung, während der die Kapazität gemessen wird. Nach 1 Minute wird dann der Reststromfluß gemessen und der '**DD**'-Wert nach folgender Formel berechnet:

$$\frac{\text{Strom nach 1 Minute (mA)}}{\text{Testspannung (V) x Kapazität (F)}}$$

1. Setzen Sie die rechte Anzeigemarke mit den ▲ ▼ Bereichstasten auf '**DD**'.
2. Bestätigen Sie die Standardeinstellung von 30 Minuten oder setzen Sie die linke Anzeigemarke auf die Position ⏱ und stellen Sie dann die Testdauer mit den ▲ ▼ Bereichstasten ein. Die maximale Testdauer beträgt 90 Minuten.
3. Bestätigen Sie die Standardspannung von 500 V oder setzen Sie die linke Anzeigemarke mit den ▲ ▼ Wähltasten auf die gewünschte Testspannung.
4. Starten Sie den Test, indem Sie die rote Testtaste mindestens 1 Sekunde lang gedrückt halten.
5. Nach Beendigung des Tests wird der '**DD**'-Wert sequentiell mit dem entsprechenden Isolationswiderstand, dem **PI-**Verhältnis und dem Kapazitätswert angezeigt. Diese Sequenzanzeig wird solange wiederholt, bis eine Taste gedrückt wird oder bis sich das Instrument automatisch abschaltet. Weitere Details zur Endergebnisanzeige entnehmen Sie **Anhang 1**.

Testen mit Spannungsstufen (SV)
Dieser Test unterliegt dem Prinzip, daß ein idealer Isolator bei allen Spannungen denselben Widerstandswert hat, während ein überlasteter Isolator bei höheren Spannungen geringere Widerstands-werte aufweist. Beim Testen mit 2,5 kV oder mit 5,0 kV wird die Spannung jede Minute um 20 Prozent gesteigert, und die Werte werden nacheinander gemessen.

1. Setzen Sie die rechte Anzeigemarke mit den ▲ ▼ Bereichstasten auf '**SV**'.
2. Bestätigen Sie die voreingestellte Standard-Testdauer von 5 Minuten.
3. Bestätigen Sie die voreingestellte Spannung von 2500 V oder setzen Sie die linke Anzeigemarke mit den ▲ ▼ Wähltasten auf die 5000 V Position.
4. Starten Sie den Test, indem Sie die rote Testtaste mindestens 1 Sekunde lang gedrückt halten.
5. Nach Beendigung des Tests werden die 5 einzelnen Ergebnisse nacheinander angezeigt, gefolgt von einem Kapazitätswert (falls zutreffend). Diese Sequenzanzeige wird solange wiederholt, bis eine Taste gedrückt wird oder bis sich das Instrument automatisch abschaltet. Weitere Details zur Endergebnisanzeige entnehmen Sie **Anhang 1**.

Betrieb

Werkseinstellungen

Die folgende Tabelle zeigt die Testzeiten, die in einem neuen Instrument für jeden Testmodus eingestellt sind. Bitte beachten Sie, daß die für den **PI**-Test eingestellten Testzeiten **T1** und **T2** für die Berechnung eines PI-Wertes beim **DD**-Test verwendet werden.

Testmodus	T1	T2	T3
SV	-	-	5 min (feststehend)
PI	1 min	10 min	10 min
DD	wie **PI**	wie **PI**	30 min
BURN - IR	-	-	30 min

Benutzerspezifische Zeitwerte für den PI-Test

Im Neuzustand berechnet das ***S1-5005*** das PI-Verhältnis mit den nach 1 Minute (**T1**) und 10 Minuten (**T2**) gemessenen Werten. Diese ursprüngliche Einstellung produziert ein **PI**-Ergebnis basierend auf dem Verhältnis von **T1** zu **T2**. **T3** ist die Gesamttestdauer (anfangs 10 Minuten für die Testdauer). Durch Ändern von **T3** können zwei unterschiedliche **PI**-Werte berechnet werden. Das erste **PI**-Verhältnis basiert auf den nach **T1** und **T2** gemessenen Werten. Das zweite Ergebnis wird anhand der Zeiteinstellungen für **T2** und **T3** berechnet. Wenn **T2** und **T3** gleich sind, wird nur ein Ergebnis berechnet.

Benutzerspezifische Zeitwerte für den DD-Test

Der **DD**-Test kann auf die gleiche Weise wie der **PI**-Test abgewandelt werden. Anfangs **T1** = **1 Minute**, **T2** = **10 Minuten**, **T3** = **30 Minuten**. Damit ergibt sich ein **PI**-Verhältnis basierend auf **T2/T1** zusätzlich zu dem **DD**-Wert.

Einstellen der benutzerspezifischen Zeitwerte

1. Wählen Sie mit den rechten ▲ ▼ Bereichstasten den gewünschten Testmodus an.
2. Wählen Sie mit den linken ▲ ▼ Wähltasten an.
3. Stellen Sie die Zeit **T3** mit den rechten ▲ ▼ Bereichstasten ein. Anschließend drücken Sie die linke ▼ Wähltaste. Die Zeit **T2** wird als **- - - 2** angezeigt.
4. Stellen Sie die Zeit **T2** mit den rechten ▲ ▼ Bereichstasten ein. Anschließend drücken Sie die linke Wähltaste. Die Zeit **T1** wird als **- - - 1** angezeigt.

Hinweise:-

- Die Zeiten können in beliebiger Reihenfolge eingestellt werden, jedoch muß **T1** die kürzeste und **T3** die längste Zeit sein.
- Die für **T1** und **T2** eingestellten Zeiten gelten sowohl für den **PI**- als auch den **DD**-Test.
- Die **T3**-Werte sind unabhängig vom **PI**- und **DD**-Test.
- Die neuen Zeiteinstellungen werden gespeichert, wenn das Instrument abgeschaltet wird.
- Wenn zwei Zeitwerte gleich sind, wird das PI-Ergebnis nicht berechnet und das Resultat wird als **- - -** angezeigt.

Anzeige des Endergebnisses

Nach Ablauf der Zeit **T3** wird der Test beendet und alle Testergebnisse werden in einer sich ständig wiederholenden Sequenz angezeigt. Einzelheiten zur Ergebnisanzeige sind **Anhang 1** zu entnehmen.

Verwendung desAbleitanschlusses

Für grundlegende Isolationstests und in solchen Fällen, in denen kaum Auswirkungen von Oberflächenkriechströmen auf das Meß ergebnis zu erwarten sind, d.h. wenn der Isolator sauber ist und widrige Strompfade nicht zu befürchten sind, braucht der Schut zdrahtanschluß nicht verwendet zu werden. Bei Kabeltests jedoch können zwischen dem blanken Kabel und dem Außenmantel aufgrund von Feuchtigkeit oder Schmutz Oberflächenriechstrom pfade durch die Isolierung verlaufen. Wenn die Auswirkungen solcher Kriechströme - vor allem bei hohen Testspannungen - unterbunden werden müssen, kann ein blanker Draht eng um die Isolation gewickelt und anhand des dritten Testkabels mit dem Schutz drahtanschluß '**G**' verbunden werden.

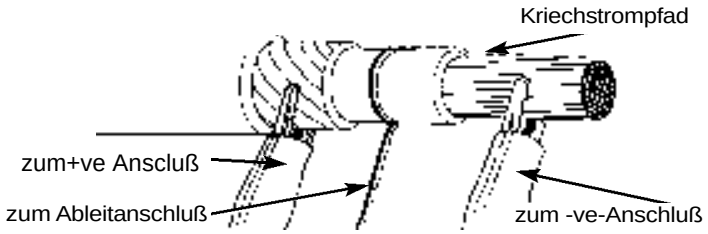

Der Schutzdrahtanschluß hat dasselbe Potential wie der Minusanschluß. Da der Kriechstromwiderstand effektiv parallel zu dem zu messenden Widerstand verläuft, bewirkt die Verwendung des Schutzdrahtanschlusses, daß der aufgrund von Oberfläch enkriechströmen fließende Strom vom Meßschaltkreis abgelenkt wird. Das Instrument zeigt deshalb den Kriechstrom des Isolators an und ignoriert über seine Oberfläche verufende Kriechströme.

Messungen oberhalb 100 GΩ

Messungen bis 100 GΩ können unter der Voraussetzung, daß die Testkabel angemessen sauber und trocken sind, ohne besondere Vorsichtsmaßnahmen durchgeführt werden. Das Ableitkabel kann, falls erforderlich, zur Beseitigung der Auswirkungen von Oberflächenkriechströmen verwendet werden. Das ***S1-5005*** kann bis 5 TΩ und bis zu 0,01 nA (gleichbedeutend mit 500 TΩ bei 5000 V) messen. Wenn Widerstände dieser Größen ordnung gemessen werden, dürfen die Testkabel sich nicht berühren oder mit irgendwelchen anderen Gegenständen in Kontakt kommen, da dies zu Kriechstrompfaden führt. Außerdem sollten scharfe Spitzen an den Testkabelanschlüssen vermieden werden, da diese die Koronaentladung begünstigen könnten.

Störungszustand (BURN)

Das Abbrandverfahren deaktiviert den 'Zusammenbruch'-Detektor und die Warnanzeige und ermöglicht damit das fortlaufende Testen unter Zusammenbruchsbedingungen mit einem Nennstrom von 5 mA.

1. Setzen Sie die rechte Anzeigemarke mit den ▲▼ Bereichstasten auf '**BURN**'.
2. Setzen Sie die linke Anzeigemarke mit den ▲▼ Wähltasten auf die gewünschte Testspannung.
3. Beginnen Sie mit dem Test, indem Sie die rote Testtaste mindestens eine Sekunde lang gedrückt halten.
4. Wenn kein vollständiger Zusammenbruch eintritt, wird der abschließende Meßwert sequentiell zusammen mit dem zugehörigen Kriechstrom- und Kapazitätswert angezeigt. Diese sequentielle Anzeige wird solange wiederholt, bis eine Taste gedrückt wird oder die automatische Abschaltung erfolgt.

⚠**Hinweis:** Bei diesem Verfahren können der Zusammenbruch des Schaltkreises und die zugehörige Rauschstörung bewirken, daß das Instrument den Betrieb einstellt, wodurch möglicherweise die Anzeige gelöscht wird, **während der Schaltkreis erregt bleibt**. In diesem Fall **MUSS VOR** dem Berühren irgendwelcher Verbindungen der Schaltkreis energielos gemacht und das Instrument abgeschaltet werden. Falls notwendig, muß das Instrument abgeschaltet und anschließend zur Rückstellung der Anzeige wieder eingeschaltet werden.

Betrieb

Zustands- und Warnanzeigen

FS2
Die in der Vertiefung des Ladeteils befindliche Sicherung **(FS2**) schützt den Niederimpedanz-Ableitschaltkreis gegen die Anlegung einer Spannung von außen. Der Ausfall der Ableitsicherung wird von der Anzeige nur dann gemeldet, wenn der Ableitschaltkreis benutzt wird. Zur Überprüfung der Sicherung muß der Plusanschluß mit dem Ableitanschluß verbunden und ein Test mit 500 V durchgeführt werden. Wenn die '**FS2**'-Marke der Anzeige blinkt, ist die Sicherung durchgebrannt. Wenn die Marke blinkt und das Ableitkabel nicht angeschlossen ist, deutet dies auf den Ausfall einer der beiden Batterien oder eine (von außen nicht zugängliche) durchgebrannte Batteriesicherung hin. Das Instrument ist in diesem Zustand einsatzfähig, doch die Betriebsdauer zwischen den Ladungen wird reduziert; es werden keine Kapazitätswerte angezeigt, und wenn die Schutzsicherung anschließend durchbrennt, erscheint kein Warnhinweis.

BREAKDOWN
Wenn ein Zusammenbruch zwischen den Testkabeln eintritt, wird der Test abgebrochen, und die Marke **'BREAKDOWN'** blinkt. Durch Wahl des **'BURN'**-Verfahrens wird der Warnhinweis **'BREAKDOWN** abgeschaltet.

⚠ **EXT VOLTS (Externe Spannung**
Eine blinkende Anzeigemarke unter der Kennzeichnung '**EXT VOLTS**' zusammen mit der blinkenden LED an der Gerätevorderseite und den blinkenden Hochspannungssymbolen weist darauf hin, daß das Voltmeter eine gefährliche Hochspannung aus einer externen Quelle registriert. Das Voltmeter zeigt eine Gleichspannung der entsprechenden Polarität oder eine Wechselspannung an.

NOISE
Bei übermäßiger externer Störung (>2 mAbei 5 kV, normalerweise ein Brummstrom von 50 oder 60 Hz) wird der Test abgebrochen, und die Marke unter der Aufschrift **'NOISE'** beginnt zu blinken.

LAST TEST
Diese Marke blinkt nach Beendigung eines Tests in Verbindung mit der wiederholten Sequenz der Anzeige abschließender Werte.

Fehlerzahlen
Interne Störungen und Fehler bewirken, daß auf der Anzeige **'E'** (Error = Fehler) zusammen mit einer Nummer erscheint. Diese Fehlernummern haben zwar die Aufgabe, bei der Fehlerdiagnose zu helfen, können jedoch auch durch extreme elektromagnetische Störungen verursacht werden. Die Fehlernummern **E5** und **E11** zeigen an, daß ein negativer Strom gemessen wird.

Eichfehler
Beim Einschalten justiert die Kalibrierprüfung automatisch das Meßsystem anhand einer internen Spannung und eines Widerstands. Die Kalibriersequenz wird erst beendet, wenn das System gleichbleibende Ergebnisse innerhalb der voreingestellten Grenzwerte liefert. Falls der Startbildschirm nicht über die Segmentprüfung hinausgeht oder bei **'CAL'** anhält , hat die kalibrierung versagt.

Datenübermittlung

RS232-Buchse
Die RS232-Buchse ist optisch von allen anderen Schaltkreisen im Inneren des ***S1-5005*** isoliert, so daß während des Testbetriebs gefahrlos ein Computer an diese Buchse angeschlossen werden kann. Entfernen der Kunststoffstaubkappe zum Freilegen der RS232-Buchse beeiträchtigt nicht die IP54-Auslegung des Instruments, doch wird die Gefahr einer Korrosion der Kontaktstifte reduziert, wenn die Kappe nach Gebrauch wieder aufgesetzt wird. Die Testergebnisse werden alle 5 Sekunden mit 9600 baud zur RS232-Buchse gesendet und in kommabegrenztem ASCII-Format ausgegeben. Das zusammen mit Ihrem Instrument gelieferte ***BM25***-**Datenübermittlungsprogramm** (**BM25 DOWNLOAD**) eignet sich für den Empfang dieser Daten.

Installation des Programms
Die Installation des ***BM25 DOWNLOAD*** Datenübermittlungsprogramm braucht nur einmal auf der Festplatte Ihres PC installiert zu werden. Sie brauchen die Installation nur dann zu wiederholen, wenn Sie Ihr Exemplar des Programms auf einem anderen Computer installieren möchten. Das Programm benötigt MS DOS Version 3.2 oder eine spätere Version und mindestens 1 MB Arbeitsspeicher. Die meisten modernen PCs erfüllen diese Kriterien. Legen Sie die Diskette in das Floppy-Laufwerk ein, und geben Sie an der DOS-Aufforderung **C:** folgendes ein:

A:Install A: C: <Taste ENTER drücken>

Daraufhin wird auf Ihrer Festplatte ein Verzeichnis namens **BM25** eingerichtet und das Programm von der Diskette im Floppy-Laufwerk in dieses Verzeichnis kopiert. Wenn Sie ein anderes Floppy-Laufwerk als A benutzen möchten, geben Sie statt **A** den Buchstaben des betreffenden Laufwerks ein.

Anschluß des Instruments an einen PC
Schließen Sie das eine Ende des 9-adrigen Kabels an die RS232-Buchse an der Vorderseite des Instruments und das andere Ende an einen seriellen Port (COM) des PC an. Achten Sie darauf, welchen Port Sie gewählt haben.

Betrieb des Programms
Zum Betrieb des Programms benötigt die Software den Befehl **BM25LOAD**, gefolgt von zwei Parametern, und zwar:

* die Kennzeichnung des PC-COM-Ports (**0 bis 4**)
* Datenspeicherung im Format einer Tabellenkalkulation oder nicht.

1 = Tabellenkalkulation (.wks) **0**=keine Tabellenkalkulation

Wenn Sie also z.B. den Port COM1 Ihres PC verwenden, geben Sie nach dem Befehl **BM25LOAD** ein Leerzeichen und die Ziffer **1** ein.

Wenn Sie die Meßergebnisse im Tabellenkalkulationsformat speichern möchten, müssen Sie als zweiten Parameter nach dem Befehl **BM25LOAD** ein weiteres Leerfeld und erneut die Ziffer 1 bzw. 0 eingeben, wenn Sie kein Tabellenkalkulationsformat wünschen, z.B:

BM25LOAD 1 1 (Leerzeichen nicht vergessen!)

Das Programm sollte aufgerufen werden, bevor das ***S1-5005*** eingeschaltet wird.

Verfahren Sie zum Start des Programms an der Aufforderung **C:** wie folgt:

1. Geben Sie **CD\BM25** ein, und drücken Sie <ENTER>. Die Aufforderung wechselt zu **C:\BM25**.

2. Geben Sie das Befehlswort **BM25LOAD** und <Leerzeichen> **Parameter** <Leerzeichen> **Parameter** ein.

3. Wenn die Software läuft, wechselt die Bildschirmfarbe zu Blau, und ein Dateipfadschirm erscheint. Wenn Sie das Tabellenkalkulationsformat nicht gewählt haben, erscheint nur ein Dateiname.

Datenübermittlung

Bei jedem erneuten Aufrufen des Programms erscheinen Dateiname und Pfad gemäß der Voreinstellung wie folgt: **C:\BM25\loaded.dat**. Sie können durch Überschreiben der Vorgabe einen neuen Pfad eingeben. Gehen Sie mit den Pfeiltasten ≠ zur nächsten Eintragung vor. Wenn Sie das Tabellenkalkulationsformat gewählt haben, kann der aufgerufene Dateiname durch Überschreiben geändert werden. Achten Sie dafür, daß die Dateikennzeichnung **.wks** nicht gelöscht oder geändert wird.

4. Drücken Sie dann <ENTER>, um zum Datenübermittlungsfen ster weiterzugehen.

5. Das ***S1-5005*** kann nun durch einmaliges Drücken des Ein-/Ausschalters eingeschaltet werden. Nach der Kalibrierungsprüfung wird im Download-Fenster die Softwareversion angezeigt.

Hinweis: Wenn das Instrument nach der Kalibrierperiode nicht identifiziert wird, liegt ein Fehler vor. Schalten Sie das Instrument ab, halten Sie das Softwareprogramm an, und überprüfen Sie die Anschlüsse des 9-adrigen Kabels. Starten Sie die Software erneut, und achten Sie darauf, daß an der DOS-Aufforderung der richtige Port eingegeben wird.

6. Geben Sie die erforderlichen Testeinstellungen und die Testdauer auf dem ***S1-5005*** ein. Ein 90 Minuten dauernder Test erstellt eine Datei von ungefähr 43 kB. Die Standarddatei hat ausreichend Kapazität für 9 Tests von jeweils 10 Minuten Dauer.

7. Drücken Sie zum Starten eines Tests und der Datenübermittlung mindestens 1 Sekunde lang die rote tarttaste. Daraufhin erscheint Text zur Kennzeichnung der Testeinstellungen (Widerstand in MΩ), und anschließend wer den im Abstand von 5 Sekunden die Meßergebnisse angezeigt.

8. Wenn ein Test vollständig abgelaufen ist, wird '**Stopped**' zusammen mit den Meßdaten im wissenschaftlichen Format angezeigt, z.B.:

   5,108e + 4 = 5,108 MΩ x 10^4 = 51,08 GΩ

Hinweis: Übermittelte Daten liefern normalerweise mehr Dezimalstellen als die auf dem Instrument angezeigten abgerundeten Werte.

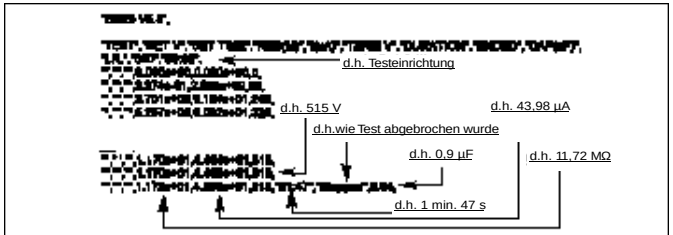

Muster für Dateiübermittlung - ASCII-Option

9. Nach Abschluß der Datenübermittlung sind eine oder zwei Dateien auf dem vorgegebenen oder von Ihnen angegebe nen Pfad eingerichtet worden. Diese Dateien können dannin verschiedene Datenbanken, Tabellenkalkulationen oder grafis che Softwareprogramme importiert werden - vgl. **Anhang 2**.

Hinweis: Ein Test kann zu jedem Zeitpunkt ohne Beeinträchtigung der Datenübermittlung unterbrochen und gestartet werden. Wenn ein Test vor der eingestellten Dauer abgebrochen wird, können Sie durch Drücken der Taste '**ESC**' die vorhandenen Daten dieses Tests umwandeln.

Anhang 1

Nach jedem Test angezeigte Ergebnisse

IR-Test
Voreingestellte Testdauer 30 Minuten.

Zeituhr	Digitalanzeige	Spannungsanzeige
Testdauer	Leer	Abschließende Testspannung
Testdauer	R	Abschließende Testspannung
Testdauer	I	Abschließende Testspannung
Testdauer	µF	Abschließende Testspannung

Hinweis:-
Ein Kapazitätswert wird nur angezeigt, wenn der Test mehr als eine Minute dauert und der Wert nicht außerhalb des Meßbereichs liegt.

PI-Test
Voreingestellte Testdauer 10 Minuten. Auch bei vorzeitigem Abbruch des Tests können die Testergebnisse berechnet und angezeigt werden.

Zeituhr	Digitalanzeige	Spannungsanzeige	Sonstige
T3 Testdauer	Leer	Abschließende Testspannung	
T2 Zeit	PI (T1 zu T2)	Spannung bei T2	PI-Anzeigemarke blinkt
T3 Zeit	PI (T2 zu T3)	Spannung bei T3	PI-Anzeigemarke blinkt
T1 Zeit	R bei T1	Spannung bei T1	
T2 Zeit	R bei T2	Spannung bei T2	
T3 Zeit	R bei T3	Spannung bei T3	
T3 Zeit	µF	Spannung bei T3	

Hinweis:-
Ein Kapazitätswert wird nur angezeigt, wenn der Test mehr als eine Minute dauert und der Wert nicht außerhalb des Meßbereichs liegt.

Anhang 1

DD-Test
Voreingestellte Testdauer 30 Minuten, gefolgt von einer einminütigen Entladungszeit. Auch bei vorzeitigem Abbruch des Tests können die Testergebnisse noch berechnet und angezeigt werden.

Zeituhr	Digitalanzeige	Spannungsanzeige	Sonstige
T3 Testdauer	Leer	Abschließende Testspannung	
T3 Zeit	DD-Wert	Spannung bei T3	DD-Anzeigemarke blinkt
T3 Zeit	R bei T3	Spannung bei T3	
T3 Zeit	I bei T3 + 1 minuten	Spannung bei T1	
T2 Zeit	PI (T2 / T1)	Spannung bei T2	PI-Anzeigemarke blinkt
T3 Zeit	µF	Spannung bei T3	

Hinweis:-
Ein Kapazitätswert wird nur angezeigt, wenn der Test mehr als eine Minute dauert und der Wert nicht außerhalb des Meßbereichs liegt.

SV-Test
Testdauer auf nur 5 Minuten eingestellt. Bei vorzeitigem Abbruch können einige Ergebnisse als **- - -** angezeigt werden.

Zeituhr	Digitalanzeige	Spannungsanzeige
Testdauer	Leer	Abschließende Testspannung
1,00 minute	R (bei 1 Minute)	Spannung bei 1 Minute
2,00 minuten	R (bei 2 Minuten)	Spannung bei 2 Minuten
3,00 minuten	R bei 3 minuten)	Spannung bei 3 Minuten
4,00 minuten	R (bei 4 Minuten)	Spannung bei 4 Minuten
5,00 minuten	R (bei 5 Minuten)	Spannung bei 5 Minuten
Testdauer	µF	Abschließende Testspannung

Hinweis:-
Ein Kapazitätswert wird nur angezeigt, wenn der Test mehr als eine Minute dauert und der Wert nicht außerhalb des Meßbereichs liegt.

Anhang 2

Anzeigenmuster für RS232-Ausgangsinformationen

TEST	SET V	SET TIME	RES(M)	I(uA)	TERM V	DURATION	ENDED	CAP(uF)	
Leakage	2500	02:05							
			36860	0.07029	2591				
			44570	0.05813	2591				
			47850	0.05417	2592				
			49540	0.05232	2592				
			50260	0.05158	2592				
			53390	0.04856	2592				
			53710	0.04826	2592				
			53960	0.04804	2592				
			54220	0.04781	2592	02:05	Finished	0.01	

Formatmuster für Tabellenkalkulation

Titel	**Testtyp**
IR	R
Leakage	I
Burn	Burn
DD	DD
PI	PI
SV	SV

Zusätzliche Spalten an Ende für spezifische Ergebnisse des DD- oder PI-Tests.

ASCII-Formatmuster

```
"TEST","SET V","SET TIME","RES(M)","I(uA)","TERM V","DURATION","ENDED","CAP(uF)
"Leakage","2500","02:05",
"","","",3.686e+04,7.029e-02,2591,
"","","",4.457e+04,5.813e-02,2591,
"","","",4.785e+04,5.417e-02,2592,
"","","",4.954e+04,5.232e-02,2592,
"","","",5.026e+04,5.158e-02,2592,
"","","",5.339e+04,4.856e-02,2592,
"","","",5.371e+04,4.826e-02,2592,
"","","",5.395e+04,4.804e-02,2592,
"","","",5.422e+04,4.781e-02,2592,"02:05","Finished",0.01,
```

Reparaturen und Garantie

Das Instrument enthält statisch empfindliche Bauteile, weshalb die gedruckte Schaltung sorgfältig behandelt werden muß. Falls die Schutzvorrichtungen eines Instruments beschädigt worden sind, sollte es nicht verwendet, sondern an eine geeignete Reparaturwerkstatt geschickt werden. Die Schutzvorrichtungen sind wahrscheinlich beschädigt, wenn folgende Bedingungen vorliegen: sichtbare Beschädigung, fehlende Anzeige der erwarteten Meßergebnisse; längere Lagerung unter widrigen Bedingungen oder starke Transportbelastung.

NEUE INSTRUMENTE UNTERLIEGEN EINER GARANTIE VON 1 JAHR AB DEM DATUM DES KAUFS DURCH DEN BENUTZER.

Hinweis: Das Gehäuse darf nur von entsprechend autorisierten Reparaturfirmen geöffnet werden, da sonst die Garantie für dieses Instrument automatisch erlischt.

Reparaturarbeiten und Ersatzteile
Wenden Sie sich zwecks Wartungsarbeiten an ***MEGGER***®-Instrumenten entweder an:

AVO INTERNATIONAL <u>oder an</u>	**AVO INTERNATIONAL**
Archcliffe Road	Valley Forge Corporate Center
Dover	2621 Van Buren Avenue
Kent CT17 9EN	Norristown
Angleterre	PA 19403 USA
Tel: +44(0)1304 502243	Tel: +1 (610) 676-8579
Fax: +44(0)1304 207342	Fax: +1 (610) 676-8625

oder an eine autorisierte Reparaturfirma.

Autorisierte Reparaturfirmen
Eine Reihe von Firmen sind für die Reparatur der meisten ***MEGGER***®-Instrumente unter Verwendung von Original ***MEGGER***®-Ersatzteilen autorisiert. Wenden Sie sich wegen Ersatzteilen, Reparaturwerkstatten und Beratung über die jeweils bestgeeigneten Maßnahmen an eine autorisierte Auslieferung bzw. Vertretung.

Einsenden Eines Instruments Zur Reparatur
Wenn ein Instrument zwecks Reparatur zurück geschickt werden muß, sollte es mit vorbezahiter Fracht an die angebrachte Anschrift gesandt werden. Gleichzeitig sollte zur Erledigung der britischen Zollformalitäten per Luftpost eine Kopie der Rechnung zusammen mit dem Packzettel eingesandt werden. Auf Wunsch wird dem Absender vor Ausführung irgendwelcher Arbeiten am Instrument ein Kostenvoranschlag unter Berücksichtigung der Frachtkosten und anderer Gebühren zugesandt.

This page is intentionally blank

Cette page est intentionnellement vierge.

Diese Seite wurde absichtlich unbedruckt gelassen.

Esta pàgina se deja en blanco a propósito

AVISOS DE SEGURIDAD

- Deberán leerse y comprenderse las precauciones y los avisos de seguridad antes de usar el instrumento. También deberán observarse durante su uso.
- El circuito bajo prueba debe ser desconectado, desenergizado y aislado antes de proceder a efectuar las conexiones de prueba.
- El ***S1-5005*** es capaz de generar hasta 5 mAa 5000 V. Las conexiones de circuitos no deben tocarse cuando se selecciona HV (alto voltaje).
- Se deben descargar los circuitos antes de desconectar los cables de prueba.
- En ciertas circunstancias, al fallar el circuito bajo prueba el instrumento podría terminar la prueba, posiblemente causando pérdida de visualización mientras el circuito permanece energizado. En este caso, es importante descargar el circuito y desconectar el instrumento antes de tocar las conexiones.
- El área de bornes de prueba y el rebaje del panel de carga deben mantenerse en estado limpio y seco.
- El tipo y la capacidad de los fusibles de repuesto deben ser correctos.
- El instrumento no debe ser usado si cualquier parte del mismo está dañada.
- Para descripciones y precauciones más detalladas refiérase a la sección Precauciones en las pruebas en la página 76.

NOTA
SÓLO EL PERSONAL COMPETENTE Y DEBIDAMENTE FORMADO PODRÁ UTILIZAR EL INSTRUMENTO.

Guía del usuario

User Guide - p2 Guide de l'utilisateur - p30 Gebrauchsanleitung - s50

Avisos de Seguridad 70
Descripción General 72
Resumen de la Función de prueba 74
Funciones y controles 75
Carga de la batería 76
Funcionamiento
Precauciones de comprobación 76
Ejecución de las prueba - Generalidades 77
Procedimientos de prueba
Comprobación de la resistencia de aislamiento (**R**)78
Medición de corriente de prueba (**I**) 78
Pruebas del índice de polarización (**PI**) 78
Pruebas de descarga dieléctrica (**DD**) 79
Pruebas de voltaje escalonado (**SV**) 79
Ajustes de fábrica
Prueba PI temporizada a medida del usuario 80
Prueba DD temporizada a medida del usuario 80
Ajuste de los valores de tiempo de prueba a medidadel usuario 80
Uso del terminal de protección 81
Medidas por encima de 100 GΩ 81
Acondicionamiento de falla (BURN) 81
Indicadores de condición y aviso 82
Copiado de datos 83
Apéndice 1 85
Apéndice 2 85
Reparacione y Garantia 88

Símbolos usados en el instrumento

Referirse a la guía del usuario.

Riesgo de sacudida eléctrica.

Equipo totalmente protegido por aislamiento doble (Clase II).

El equipo está conforme con las directrices actuales de la UE.

Descripción General

El ***S1-5005*** es un instrumento compacto, automatizado de alto voltaje, accionado por pilas usado para llevar a cabo pruebas de índice de polarización, voltaje escalonado y descarga dieléctrica, así como pruebas de aislamiento por zonas. El ***S1-5005*** tiene una capacidad medidora de resistencia de hasta 5 TΩ y una medición de corriente de fuga que permite medir resistencias de hasta 500 TΩ.

El instrumento ha sido diseñado para aprovechar al máximo la tecnología de microprocesadores, e incorpora un claro y amplio display de cristal líquido que combina lecturas de resistencia de aislamiento digitales y analógicas.

Pueden seleccionarse opciones de voltaje nominal fijo de 500 V, 1000 V, 2500 V y 5000 V. Un reglaje de voltaje de salida variable aporta una gama de 25 V a 5000 V que puede incrementarse en pasos de 25 V.

Al conmutarse, el instrumento realiza una autoverificación de calibración que ajusta automáticamente el sistema de medición. La secuencia de calibración impide que sea llevada a cabo cualquier prueba si el sistema de medición no satisface los límites previamente establecidos.

Al iniciarse una prueba, el LED de aviso de HV situado en la parte frontal del instrumento parpadea, al tiempo que se visualizan los símbolos indicadores de HV. El temporizador integral se pone en marcha automáticamente y visualiza los minutos y segundos transcurridos desde el comienzo de la prueba. El temporizador puede ser usado para fijar la duración de una prueba, y detendrá automáticamente el voltaje de salida cuando ha transcurrido el tiempo fijado.

Durante una prueba y a través de un enlace óptico aislado se envían, automáticamente, mediciones cada 5 segundos al conector RS 232 para permitir el copiado de los resultados a un ordenador.

La capacidad de la batería se visualiza continuamente mediante un indicador segmentado. El indicador destella cuando la batería necesite recargarse. La alimentación se obtiene de dos acumuladores de plomo recargables y sellados conectados en paralelo. Si una de las dos baterías falla (o se corta un fusible de protección interno) el instrumento seguirá funcionando con la batería alternativa. La batería es recargable mediante alimentación externa de 95 - 265 V ca, 50-60 Hz, ó 12 V cc.

Las conexiones de carga, el indicador de alimentación principal y los fusibles de protección del instrumento se encuentran en un rebajo protegido a prueba de salpicaduras en el panel frontal.

Las bisagras especialmente diseñadas para las tapas permiten la retirada de estas tapas y sustituirlas si es necesario y protegerá a la tapa de cualquier esfuerzo o daño desenganchándose si se abre inintencionadamente más allá de su tope.

Incluye de serie las características de seguridad siguientes:

- El LED indicador de HV en la parte frontal del instrumento, y los símbolos parpadeantes de H.V. en el display recuerdan al usuario que hay presente un voltaje peligroso durante las pruebas.
- Voltaje externo de >50 V visualizado con símbolos parpadeantes de H.V. en el display.
- Carga automáticamente descargada al finalizar la prueba y visualización de la tensión amortiguadora (>50 V).
- Cubierta deslizante de enclavamiento para evitar el acceso simultáneo de los terminales de carga y de prueba.
- Los enchufes de terminales de prueba enclavan los cables de prueba en la caja y evitan la desconexión accidental.

Resumen de la Función de prueba

Medición de corriente de prueba (I)
Esta función mide el aislamiento al voltaje seleccionado para aportar una lectura localizada instantánea, al tiempo que se visualiza el valor de la corriente de fuga en el display digital. (N.B. La escala analógica siempre visualiza resistencia). El resultado de pruebas final se suministra secuencialmente con sus valores de resistencia y capacitancia correspondientes.

Prueba del índice de polarización (PI)
El índice de polarización es el término aplicado a la relación de absorción dieléctrica, cuando el aislador es sometido a una prueba de resistencia de aislamiento, y los valores de resistencia son medidos después del tiempo **T1** (1 minuto por exclusión) y de nuevo después del tiempo **T2** (10 minutos por exclusión). El índice de polarización es calculado automáticamente a partir del valor de resistencia después del tiempo **T2**, dividido por el valor de resistencia después del tiempo **T1**. Una alta absorción dieléctrica es indicada mediante una alta relación de **PI**. Los resultados de pruebas finales se incluyen secuencialmente con sus valores de capacitancia y corriente de fuga correspondientes. La prueba se realizará a cualquier voltaje. Los valores de PI temporizados pueden ser fijados a medida del usuario, si se requiere (vea '**Prueba de PI temporizada a medida del usuario**' en la página 80).

Prueba de descarga dieléctrica (DD)
Esta función mide la absorción dieléctrica de un elemento bajo prueba al tiempo que ignora los efectos de los recorridos de la fuga de superficie paralela. El tiempo de prueba por exclusión es de 30 minutos, seguido de 1 minuto de descarga. Los resultados de prueba finales se aportan en secuencia con un valor PI, el valor de la resistencia final, y el valor de la capacitancia. Los valores de DD temporizados a medida del usuario pueden ser fijados, si se requiere (véase '**Prueba de DD temporizada a medida del usuario**' en la página 80).

Comprobación de tensión de paso (SV)
Esta prueba de 5 minutos depende del principio que establece que un aislador ideal producirá lecturas idénticas de resistencia a todas las tensiones. Por el contrario, un aislador que sufre un sobresfuerzo mostrará valores inferiores a tensiones más altas. Funcionando a 2,5 kV ó 5 kV, la tensión aumenta una quinta parte cada minuto y se tomarán medidas sucesivas. Al terminarse, cada uno de los 5 resultados independientes se visualizan secuencialmente seguidos del valor de capacitancia.

Acondicionamiento de falla (Burn)
Esta característica de corriente baja se utiliza para realizar comprobaciones continuas bajo condiciones de interrupción.

Notas generales:
1) Una lectura del valor de capacitancia sólo puede conseguirse si ha estado realizándose la prueba durante más de un minuto y la lectura no superponía las gamas.
2) Los resistores de descarga internos se seleccionan automáticamente:
   - Al final de una prueba.
   - Si el instrumento está desconectado.
   - Si se detecta un error interno.

Será visualizado cualquier voltaje remanente en los bornes al final de la prueba hasta que se reduce a menos de 50 V. Durante una salida de prueba se visualiza el voltaje de los bornes, junto con los símbolos parpadeantes de alto voltaje y el LED rojo parpadeante.

Funciones y controles

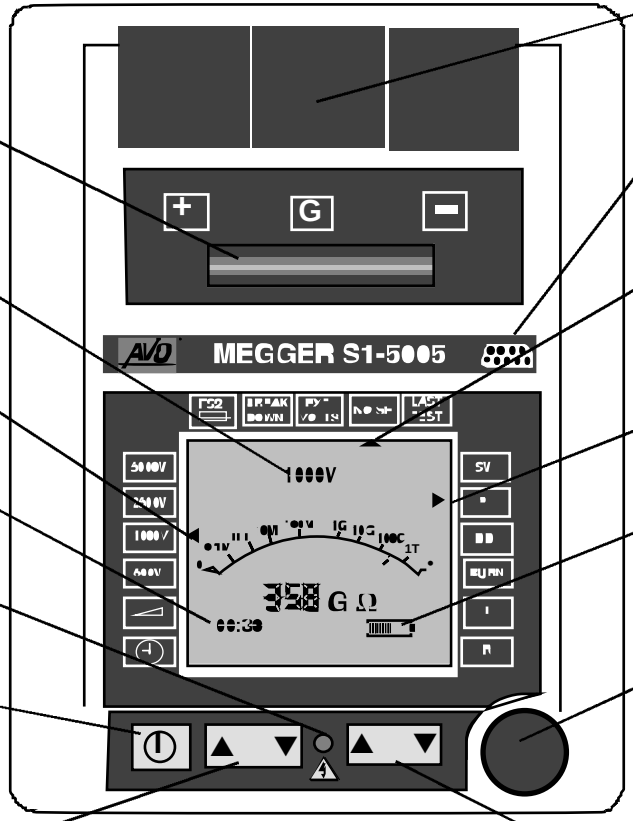

Cubierta de rebajo a prueba de salpicaduras
Cae hacia atrás para revelar las conexiones de la red y de carga de la batería de 12 V junto con los fusibles de protección del instrumento.

Representación de la tensión
Tensión de prueba o tensión externa >50V junto con símbolos H.V. destellantes.

Cursor izquierdo de la pantalla
Indica la tensión seleccionada o el sincronizador.

Represenatación del sincronizador
Muestra la duración de prueba ajustada y visualiza el tiempo que transcurre durante la prueba.

Aviso de HV - Parpadea durante el transcurso de una prueba, o si existe un voltaje peligroso.

Botón On/Off (Con/Descon)
Pulse para Con/Descon (Espere unos segundos para la calibración automática)

Teclas selectoras
1) Tensión ajustable
2) Sincronizadorajustable

Cubiertas de la conexión terminal
Se levantan individualmente para dar acceso a los terminales de los cables de prueba. Las cubiertas están enclavadas con cubiertas empotradas corredizas.

Enchufe RS232C
Envía los resultados de la prueba cada 5 segundos para permitir su copiado al PC.

Indicadores de condición y aviso
Destella para indicar cualquier condición adversa que afecte a la prueba. También indica cuando se visualizan secuencialm ente los resultados de la última prueba.

Cursor derecho de la pantalla
Indica la modalidad de prueba seleccionada.

Indicador de capacidad de batería
Los segmentos disminuyen conforme vaya utilizándose la batería. El símbolo destella cuando la batería está excesivamente descargada.

Botón de prueba
Pulse al menos durante 1 segundo para iniciar la prueba y poner el sincronizador en marcha. Pulse de nuevo para detener la prueba manualmente.

Teclas del alcance
1) Seleccione la modalidad de prueba.
2) Ajuste la tensión variable.
3) Ajuste el sincronizador. Máx. 90 minutos.

GUÍA

BREAKDOWN	-	INTERRUPCION
EXT VOLTS	-	VOLTIOS EXTERNO
NOISE	-	RUIDO
LASTTEST	-	ULTIMAPRUEBA
BURN	-	QUEMADURA

Carga de la batería

General

Es aconsejable recargar totalmente la batería antes de poner el instrumento en funcionamiento por primera vez. La carga se realiza mediante una alimentación eléctrica ca, o una alimentación de 12 V cc. Existe un cable para cargar con un enchufe para encendedor de cigarrillos de automóvil para poder carga la batería desde un vehículo. La comprobación queda inhibida durante la carga.

Recarga de la alimentación principal

La recarga de entrada de alimentación requiere una tensión que se encuentre dentro del alcance 95-265 V ca, 50-60 Hz. Desconecte los cables de prueba y conecte la alimentación principal al conector IEC 320 en el receso de carga. Confirme que la luz indicadora roja se ilumina. La carga es automática tan pronto se conecta la alimentación principal. Para cargarse totalmente, la batería tarda unas 16 horas. Ocho horas de carga (desde el punto de descarga total) conseguirá al menos 90% de la carga total. Conecte el instrumento y compruebe que el indicador de capacidad de la batería muestra el estado de carga.

Recarga de alimentación de 12 V cc

Este método de recarga sólo debería realizarse si la alimentación principal no está disponible, pues es más lenta y menos eficaz. Si se utiliza un vehículo como fuente de carga, la máquina debería funcionar. Observe las polaridades correctas tal como se muestra, conecte el enchufe DIN de 12 V a la alimentación externa de 12 V cc y conecte.

Precaución: Si se aplican más de 15 V a este enchufe se sobrecargará la batería.

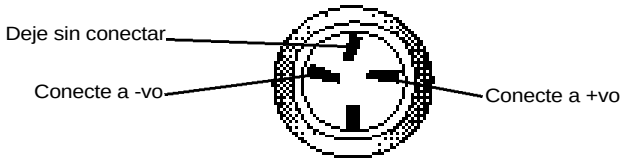

Enchufe DIN de 12 V (visto desde el panel frontal)

Notas sobre la carga de la batería

1) No deje la batería totalmente descargada. La carga frecuente para mantener la batería 'en su tope', potenciará la existencia de la batería al máximo.

2) La carga de la batería deberá realizarse en un entorno seco (la protección medioambiental IP54 es aplicable con la cubierta de carga cerrada herméticamente).

3) Cuando cargue la batería en una habitación, la zona deberá estar bien ventilada.

4) La batería sólo debería cargarse a temperaturas que se encuentren entre 0˚ C y 40˚ C.

5) Es beneficial seguir cargando y no se perjudicará la batería si se deja el cargador indefinidamente.

6) Si no se utiliza el instrumento por largos períodos de tiempo, vuelva a cargar la batería durante 24 horas al menos cada 6 meses (Con más frecuencia se la temperatura de almace namiento es >40 C).

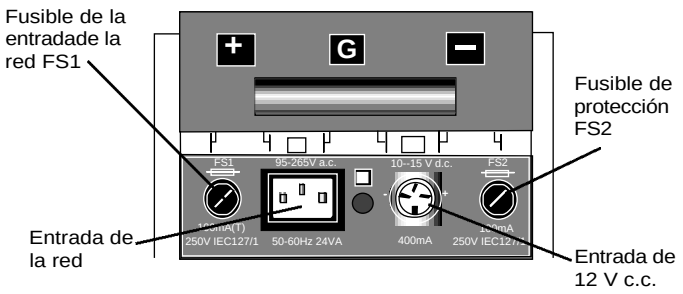

Funcionamiento

Precauciones de comprobación

El circuito bajo prueba debe desactivarse y aislarse completamente antes de efectuar las conexiones de prueba.

1. Sólo el personal preparado y competente podrá utilizar el instrumento.
2. Las conexiones del circuito **no se tocarán** durante una prueba.
3. El ***S1-5005*** puede dar una sacudida eléctrica. Los circuitos altamente capacitivos (p.ej. longitudes largas de cable) cargados a varios kV pueden crear posibles cargas letales.
4. Deberá tenerse mucho cuidado para evitar la desconexión de los circuitos capacitivos durante una prueba, dejando el circuito en un estado cargado.
5. El voltímetro y función de descarga automática del ***S1-5005*** se verá como características extras de seguridad y no como sustituto de la práctica normal sobre seguridad en el trabajo.
6. Cuando se realicen pruebas largas sin vigilancia, se tendrá cuidado en no causar ninguna lesión o daño.
7. Cuando se utilice la función **'BURN**', deberá tenerse cuidado en no causar ningún daño o deterioro significativo.
8. En ciertas circunstancias, al fallar el circuito bajo prueba el instrumento podría terminar la prueba, posiblemente causando pérdida de visualización mientras el circuito permanece energizado. En este caso, es importante descargar el circuito y desconectar el instrumento antes de tocar las conexiones.
9. El ***S1-5005*** tiene una clasificación sobre protección medioam bintal de IP54 con una cubierta de receso de carga cerrada her méticamente. Desde un punto de vista protector (y para evitar las corrientes de fuga no deseadas) es importante asegurarse de que la zona del terminal de prueba y el receso de carga se mantengan sin suciedad ni humedad.
10. Antes de su uso se **eliminará** cualquier superficie de agua del instrumento, especialmente de la zona de los enchufes del cable de prueba.
11. Las sustituciones de los fusibles **serán** del tipo y capacidad nominal correctos. Haga referencia a la sección de Especificaciones para los detalles sobre los fusibles de sustitución correctos.
12. Si cualquier parte del instrumento está dañada, **no** debería utlizarse el mismo, sino devolverse al fabricante o a una empre sa reparadora aprobada.
13. En el supuesto de que la toma del cable de alimentación no fuera del tipo adecuado para las salidas de sus toma orrientes, no utilice un adaptador. Utilice otro cable que sea adecuado o bien altere con cuidado el extremo del cable de alimentación y coloque una toma adecuada. El código de cableado correcto es el siguiente:

	EE.UU.	**R.U.**
Puesta a tierra (Masa)	Verde	Amarillo/Verde
Neutro	Blanco	Azul
Fase (Línea)	Negro	Marrón

Ejecución de las prueba - Generalidades

1. Encienda el ***S1-5005*** pulsando una vez el interruptor '**On/Off**'. Todos los segmentos LCD aparecen durante 5 segundos, seguido de la palabra **'CAL'** durante unos 5 segundos. Cuando desaparece la palabra **'CAL'**, el instrumento esta listo para su uso y se encuentra en el modo de espera.

Nota: Cuando no se este realizando una comprobación, (es decir en modo de espera), el ***S1-5005*** actúa como un voltímetro (50 V a 1000 V).

2. Asegúrese de que todos los cables de prueba están limpios y en buenas condiciones y conéctelos al circuito **aislado** bajo prueba.

Si se detecta una tensión interna >50 V, la tensión aparece junto con los símbolos destellantes de alta tensión.

3. Seleccione el modo de prueba requerido utilizando las teclas de Alcance para mover el cursor de la derecha.
4. Amenos que acepte un tiempo de prueba implícito, utilice las teclas Selectoras para mover el cursor de la izquierda hacia la posición del sincronizador y aumentar hasta la duración de prueba deseada utilizando las teclas de Alcance. Si se ajusta el tiempo a cero se inhibe cualquier comprobación. (El tiempo máximo de prueba es de 90 minutos).
5. Vuelva a utilizar las teclas Selectoras para ajustar la tensión de prueba requerida. La posición de tensión variable ofrece la oportunidad de seleccionar una tensión estándar entre 25 y 5000 V cc, o variar continuamente la tensión en pasos de 25 V durante una prueba. Para seleccionar, mueva el cursor de a izquierda a la posición de tensión variable y ajuste la tensión del terminal de salida utilizando las teclas de Alcance. La tensión ajustada aparece en la parte superior de la pantalla. Cuando se ajuste a la tensión variable, no puede alterarse el modo de prueba.

Nota: El cambiar la tensión durante una prueba alterara temporalmente la lectura. Una lectura estable aparecerá cuando se haya estabilizado la nueva tensión durante un período de muestra completo (normalmente de 5 segundos).

6. Inicie la prueba pulsando el botón de pruebas rojo durante 1 segundo por lo menos. El LED rojo y los símbolos parpadeantes de H.V. indican que se está llevando a cabo una prueba.
7. Cuando se comprueben cargas resistivas o moderadamente capacitivas (hasta aproximadamente 1µF) la tensión de prue ba aparecerá en unos segundos. La tensión de prueba se con- trola dentro del 5% del valor nominal, ajustándose para cambios en resistencia. La tensión de salida actual se visualiza
durante las pruebas. En piezas de gran capacitancia el aumen to de tensión será mucho mas lento y en bajas resistencias (menos de 10 MΩ) es posible que la tensión nunca suba a su valor nominal.
8. Las lecturas de resistencia de aislamiento se actualizan una vez cada segundo para medidas hasta 100 MΩ. Para medidas hasta 1 GΩ e infinidad, la velocidad de frecuencia de muestra se reducirá a 20 segundos.
9. Una prueba puede abortarse manualmente en cualquier momento pulsando el botón de prueba rojo. Se terminara una prueba automáticamente si:
   - Se alcanza la duración de prueba ajustada.
   - El aislamiento bajo prueba sufre una interrupción total.
   - Interferencia excesiva de ruido eléctrico (>2 mAa 5 kV).
   - Se termina la batería.
   - Se corta el FS2.
   - Ocurre un fallo interno.

Cuando se termina la prueba, la pieza bajo prueba se descargara automáticamente.

10. Para apagar el instrumento, pulse una vez el botón On/Off. La desconexión automática ocurre transcurridos 10 minutos de inactividad en los modos **'R' 'I'** y '**Burn**' y transcurridos 30 minutos de inactividad en los modos **'DD', 'PI'** y **'SV'**.

Funcionamiento

Procedimientos de prueba

Comprobación de la resistencia de aislamiento (R)

Esta modalidad de prueba mide la resistencia de aislamiento continuamente a la tensión seleccionada. Las lecturas digitales más elevadas que pueden obtenerse son 500 GΩ a 500 V y 5 TΩ a 5000 V, por encima de la cual puede esperarse que decaiga la especificada precisión. Sin embargo, la visualización del indicador analógico funciona a 1 TΩ a todas las tensiones.

1. Usando las teclas de alcance ▲ ▼, mueva el cursor derecho hasta '**R**'.
2. Acepte el tiempo por exclusión de 30 minutos o, usando las teclas selectoras ▲ ▼, ueva el cursor izquierdo hasta la posición , y luego fije la duración de la prueba usando las teclas de alcance ▲ ▼. La duración máxima de la prueba es de 90 minutos.
3. Usando las teclas selectoras ▲ ▼, mueva el cursor izquierdo hasta el voltaje de prueba requerido.
4. Empiece la prueba pulsando el botón de prueba rojo durante al menos un segundo.
5. Al terminarse, la medición de resistencia final se visualiza secuencialmente con la corriente de fuga correspondiente y el valor de capacitancia, cuando disponible. Esta visualización secuencial se repite hasta que se pulsa una tecla o funciona la desconexión automática. Para más detalles de la información de visualización final, véase **Apéndice 1**.

Medición de corriente de prueba (I)

Esta modalidad de prueba mide el aislamiento continuamente a la tensión seleccionada, pero muestra el valor actual de fuga en vez del de resistencia. Esto permite la lectura de mayores resistencias, teniendo en cuenta que conforme la corriente de fuga se acerca a cero, disminuye la precisión de la lectura. Utilizando este método, teóricamente es posible medir resistencias hasta 500 TΩ a 5000 V, pero será necesario realizar una prueba de calibración del circuito abierto para establecer la corriente de desplazamiento del circuito de medición y fuga del cable de prueba (Esto es ±0,2 nA a temperaturas normales con cables de prueba nuevos y limpios).

1. Usando las teclas de alcance ▲ ▼, mueva el cursor derecho hasta '**I**', y observe los mismos procedimientos aplicables a la prueba de aislamiento '**R**'.
2. Al terminarse, la medición de fuga de corriente final se visualiza secuencialmente con la resistencia y el valor de capacitancia, cuando disponible. Esta visualización secuencial se repite hasta que se pulsa una tecla o funciona la desconexión automática. Para más detalles de la información de visualización final, véase **Apéndice 1**.

Pruebas del índice de polarización (PI)

El índice de polarización es el término aplicado a la relación de absorción dieléctrica, cuando el aislador es sometido a una prueba de resistencia de aislamiento, y los valores de resistencia son medidos después del tiempo **T1** (1 minuto por exclusión) y de nuevo después del tiempo **T2** (10 minutos por exclusión). El índice de polarización es calculado automáticamente a partir del valor de resistencia después del tiempo **T2**, dividido por el valor de resistencia después del tiempo **T1**.

1. Usando las teclas de alcance ▲ ▼, mueva el cursor derecho hasta '**PI**'.
2. Usando las teclas selectoras ▲ ▼, mueva el cursor izquierdo hasta el voltaje de prueba requerido.
3. Inicie la prueba pulsando el botón de pruebas rojo durante un segundo por lo menos.

4. Al finalizar la prueba, se visualiza secuencialmente la relación del **PI** seguido de los valores de resistencia de 1 minuto y 10 minutos correspondientes y, en los casos aplicables, del valor de la capacitancia.
5. En lugar de un valor **T3** temporizado a medida del usuario, el display mostrará **- - -**. Este display secuencial se repite hasta que se pulsa una tecla o se activa la desconexión automática. Para más detalles sobre el display final, vea el **Apéndice 1**.

Pruebas de descarga dieléctrica (DD)
Mediante esta prueba se mide la absorción dieléctrica de un aislador y se obtiene una indicación de la cantidad de suciedad y humedad absorbida. Los ajustes implícitos son 500 V y 30 minutos, pero estos valores pueden cambiarse según convenga. Los ajustes implícitos se reajustarán si se aleja el cursor de la posición '**DD**'. El aislador bajo prueba se carga a 500 V durante 30 minutos (para conseguir una condición estable). A continuación sigue una descarga rápida durante la cual se mide la capacitancia. Entonces se mide el restante flujo de corriente pasado 1 minuto y se calcula el valor **'DD'** a partir de la fórmula:

$$\frac{\text{Corriente pasado 1 minuto (mA)}}{\text{Tensión de prueba (V) x Capacitancia (F)}}$$

1. Usando las teclas de alcance ▲ ▼, mueva el cursor derecho hasta '**DD'**.
2. Acepte el tiempo por exclusión de 30 minutos o, usando las teclas selectoras ▲ ▼, mueva el cursor izquierdo hasta la posición , y luego fije la duración de la prueba usando las teclas de alcance ▲ ▼. La duración máxima de la prueba es de 90 minutos.
3. Acepte el voltaje por exclusión de 500 V ó, usando las teclas selectoras ▲ ▼, mueva el cursor izquierdo hasta el voltaje de prueba requerido.
4. Inicie la prueba pulsando el botón rojo durante un segundo por lo menos.
5. Al finalizar la prueba, se visualiza secuencialmente el valor '**DD**' con los valores de resistencia de aislamiento, relación del **PI** y capacitancia. Este display secuencial se repite hasta que se pulsa una tecla o se activa la desconexión automática. Para más detalles sobre el display final, vea el **Apéndice 1.**

Pruebas de voltaje escalonado (SV)
Esta prueba se basa en el principio que establece que un aislador ideal producirá lecturas idénticas de resistencia a todas las tensiones, mientras que un aislador que sufre un sobresfuerzo mostrará valores inferiores a tensiones más altas. Funcionando a 2,5 kV ó 5 kV, la tensión aumenta una quinta parte cada minuto y se tomarán medidas sucesivas.

1. Usando las teclas de alcance ▲ ▼, mueva el cursor derecho hasta '**SV**'.
2. Acepte el tiempo por exclusión de 5 minutos.
3. Acepte el voltaje por exclusión de 2500 V ó, usando las teclas selectoras ▲ ▼, mueva el cursor izquierdo hasta la posición 5000 V.
4. Inicie la prueba pulsando el botón rojo durante un segundo por lo menos.
5. Al finalizar la prueba, se visualiza secuencialmente cada uno de los 5 resultados separados seguido del valor de capacitancia, si se incluye. Este display secuencial se repite hasta que se pulsa una tecla o se activa la desconexión automática. Para más detalles sobre el display final, vea el **Apéndice 1**

Funcionamiento

Ajustes de fábrica
En la tabla siguiente se muestran estos tiempos de prueba para cada una de las funciones de prueba, según han sido ajustados en un nuevo instrumento. Observe que los tiempos de prueba **T1** y **T2** para la prueba PI se usan para calcular un resultado de PI mientras se lleva a cabo una prueba **DD**.

Función prueba	T1	T2	T3
SV	-	-	5 min (fixed)
PI	1 minutos	10 minutos	10 minutos
DD	Igual que **PI**	Igual que **PI**	30 minutos
BURN - IR	-	-	30 minutos

Prueba PI temporizada a medida del usuario
Cuando es nuevo, el ***S1-5005*** se ajusta de acuerdo con una relación de **PI** calculada a base de los ajustes de tiempo de 1 minuto (**T1**) y 10 minutos (**T2**). El tiempo **T3** también se ajusta de 15 segundos a 90 minutos. Este ajuste original produce un resultado **PI** basado en la relación de **T1** y **T2**. **T3** es el tiempo de prueba total (inicialmente 10 minutos para el tiempo de prueba). Al ajustar **T3**, pueden calcularse dos valores de relación **PI** separados. El primer valor de relación **PI** se basa en las mediciones de los valores **T1** y **T2**. El segundo resultado se calcula a base de los ajustes de tiempo de **T2** y **T3**. Nótese que si **T2** es igual que **T3**, solamente será calculado un resultado.

Prueba DD temporizada a medida del usuario
La prueba **DD** puede temporizarse a medida del usuario del mismo modo que la prueba **PI**.
Inicialmente **T1** = **1 minuto**, **T2** = **10 minutos**, **T3** = **30 minutos**. Esto aporta una relación PI basada en **T2**/**T1**, además del valor **DD**.

Ajuste de los valores de tiempo de prueba a medida del usuario
1. Usando las teclas de alcance ▲▼ derechas, seleccione la función de prueba deseada.
2. Usando las teclas selectoras ▲▼ izquierdas, seleccione .
3. Ajuste **T3** usando las teclas de alcance ▲▼ derechas. Al finalizar la prueba, pulse la tecla selectora ▼ de la izquierda. El tiempo **T2** se visualiza como **- - 2**.
4. Ajuste **T2** usando las teclas de alcance ▲▼ derechas. Al finalizar la prueba, pulse la tecla selectora ▼ izquierdas. El tiempo **T1** se visualiza como **- - 1**.

Notas:
- Estos tiempos pueden ajustarse en cualquier orden, pero **T1** debe ser el más corto y **T3** el más largo.
- Los valores ajustados para **T1** y **T2** aplicarán a ambas pruebas **PI** y **DD**.
- Los valores **T3** son independientes para las pruebas **PI** y **DD**.
- Los nuevos tiempos de prueba ajustados son retenidos cuando se desconecta el instrumento.
- Si dos valores cualesquiera son iguales, el resultado PI no es calculado, y el resultado visualizado es **- - -**.

Display de final de resultados de prueba
Después de visualizarse el tiempo **T3**, la prueba se detiene y se visualizan los resultados en una secuencia repetida constantemente. Para detalles de información sobre el display, vea el **Apéndice 1**.

Uso del terminal de protección

Para las pruebas básicas de aislamiento y cuando apenas exista la posibilidad de fuga de superficie que afecte a la medición, no es necesario utilizar el terminal de protección; es decir, si el aislador está limpio y posiblemente no existirán vías de corriente adversa. Sin embargo, en la comprobación de cable, es posible que existan vías de fuga superficial por el aislamiento entre el cable desnudo y el envainado externo debido a la presencia de humedad o suciedad. Cuando hace falta eliminar el efecto de esta fuga, especialmente a tensiones altas de comprobación, podrá enroscarse apretadamente un hilo desnudo alrededor del aislamiento y conectarse por medio de un tercer cable de prueba al terminal de protección **'G'.**

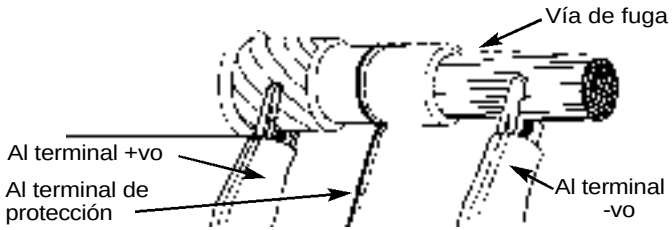

El terminal de protección está al mismo potencial que el terminal negativo. Desde que la resistencia de fuga es paralela efectiva con la resistencia a medirse, el uso de protección hace que la corriente que fluye a través de la fuga superficial se desvíe del circuito de medición. Por lo tanto, el instrumento lee la fuga del aislador, ignorando la fuga a través de su superficie.

Medidas por encima de 100 GΩ

Las mediciones hasta 100 GΩ pueden hacerse sin ninguna precaución especial, asumiendo que los cables de prueba estén razonablemente limpios y secos. El cable de protección puede utilizarse para eliminar los efectos de la fuga superficial, de ser necesario. El ***S1-5005*** es capaz de medir hasta 5 TΩy tan poco como 0,01 nA(equivalente a 500 TΩ a 5000 V). Cuando se midan resistencias tan altas, los cables de prueba no deberán tocarse entre sí o cualquier otro objeto, puesto que esto introduciría vías de fuga. También se evitarán puntos agudos en las conexiones de los cables de prueba, puesto que esto fomentaría un efecto corona.

Acondicionamiento de falla (BURN)

La modalidad de Burn (Quemadura) desactiva el detector de '**Interrupción**' e indicador de aviso y por lo tanto, permite la comprobación continua bajo las condiciones de interrupción con una corriente de 5 mA (nominal).

1. Usando las teclas de alcance ▲ ▼, mueva el cursor derecho hasta '**BURN**'.
2. Usando las teclas selectoras ▲ ▼, mueva el cursor izquierdo hasta el voltaje de prueba requerido.
3. Empiece la prueba pulsando el botón de prueba rojo durante al menos un segundo.
4. Si no ocurre una interrupción completa, el valor final medido se visualiza secuencialmente con el correspondiente valor de corriente de fuga y de capacitancia. Esta visualización secuencial se repite hasta que se pulse una tecla o funcione la desconexión automática.

⚠ **Nota:** En esta modalidad, la interrupción del circuito y la interferencia del ruido correspondiente, pueden hacer que el instrumento deje de funcionar, causando posiblemente una pérdida de visualización **mientras el circuito permanece activado**. En este caso, es importante permitir descargar el circuito **antes** de tocar cualquier conexión. Si es necesario, desconecte el instrumento y luego vuelva a conectarlo para reajustar la pantalla.

Funcionamiento

Indicadores de condición y aviso

FS2
El fusible (**FS2**) que se encuentra en el receso del cargador protege al circuito de protección de baja impedancia contra la aplicación de tensiones externas. El fallo del fusible de protección se indicará en la visualización sólo cuando se esté utilizando el circuito de protección. Para comprobar si se ha interrumpido el fusible, conecte el terminal positivo al terminal de protección y empiece una prueba a 500 V. Si el cursor de visualización **'FS2'** destella, es que el fusible se ha interrumpido. Si el cursor destella cuando el cable de protección no está conectado, indica el fallo de una de las baterías o un fusible de la batería (al que no puede accederse externamente). El instrumento funcionará en esta condición, pero se reducirá el tiempo de funcionamiento entre cargas; las lecturas de capacitancia no se visualizarán y no se dará ningún aviso si el fusible de protección se interrumpe posteriormente.

Interupcion
Si ocurre una interrupción entre los cables de prueba, la prueba se terminará y destellará el cursor **'BREAKDOWN'**. Seleccionando la modalidad **'BURN'** se desactivará el indicador de aviso de '**BREAKDOWN'**.

⚠ **Voltios Ext**
Un cursor parpadeante debajo de la etiqueta '**EXT VOLTS**', combinado con el LED parpadeante en la parte frontal del instrumento, y los símbolos de alto voltaje parpadeantes, indica el voltímetro está leyendo un voltaje peligroso procedente de una fuente externa. El voltímetro mostrará el voltaje d.c. de la polaridad o bien el voltaje a.c.

Ruido
Si una interferencia externa (normalmente corriente de zumbido 50 Hz ó 60 Hz es excesiva (>2 mA a 5 kV), se terminará la comprobación y se visualizará el cursor destellante debajo de la etiqueta '**NOISE'**.

Ultima Prueba
Este cursor destella al terminarse una prueba conjuntamente con la secuencia repetitiva de las lecturas finales.

Números de errores
Las averías y errores internos harán que la visualización muestre **'E'** seguido de un número. Aunque estos números de errores están diseñados para ayudar en el diagnóstico de fallo interno, pueden dispararse por medio de casos extremos de interferencia electromagnética. Los números de error **E5** y **E11** indican que se ha medido una corriente negativa.

Errores de calibración
Al conectarse, la comprobación de calibración ajusta automáticamente el sistema de medición comparándolo con una tensión interna y un resistor. La secuencia de calibración no se acabará a menos que el sistema de medición dé resultados consistentes dentro de los límites preajustados.

Si la pantalla de arranque no progresa más allá de la comprobación del segmento, o se detiene con **'CAL'** visualizado, es que ha fallado la calibración.

Copiado de datos

Enchufe RS232
El enchufe RS232 está aislado ópticamente de todos los restantes circuitos del ***S1-5005***. Por lo tanto, no hay peligro en conectar un ordenador a este enchufe mientras se esté realizando una prueba. La retirada de la cubierta contra polvo de plástico para exponer el enchufe RS232 no afectará el valor nominal IP54 del instrumento, pero el reponer la cubierta después de su uso, reducirá la posibilidad de corrosión de la espiga de contacto. Los resultados de las pruebas se envían al enchufe RS232 cada 5 segundos. La velocidad de baudios es 9600 y el formato de los datos de salida ASCII delimitado por coma. El programa **BM25DOWNLOAD** tal como se suministra con el instrumento, es adecuado para recibir estos datos.

Instalación del programa

El proceso de instalación del programa **BM25DOWNLOAD** en el disco duro de su PC sólo se hace una vez. Sólo tendrá que repetirlo si desea transferir su copia del programa a otro ordenador. El programa funcionará utilizando DOS Versión 3.2 o versiones más recientes y requiere un mínimo de 1 MB de memoria. La mayoría de los PC modernos podrán satisfacer estos criterios. Con el disquette en la unidad de disco, en la guía **DOS C:\>**, escriba:

A:Install A: C: <pulse ENTER>

Esto crea un directorio denominado **BM25** en su disco duro y copia el programa del disquette que se encuentra en la unidad de disco al directorio. Si quiere utilizar una unidad de disco que no sea **A**, utilice la letra de la unidad de disco que esté utilizando en vez de **A**.

Conexión del instrumento a un PC
Conecte un extremo del cable de 9 rutas a la toma RS232 en la cara del instrumento, y el otro extremo a un puerto serial (COM) en el PC. Fíjese en el puerto PC que ha seleccionado.

Ejecución del programa
A fin de funcionar, el software necesitará las palabras de instrucción **BM25DOWNLOAD** seguido de 2 parámetros. Estos parámetros son:

- ***** La identificación de puerto PC COM (**0** a **4**)
- ***** Datos a salvaguardar en un formato de archivo de hoja electrónica o no.

1 = hoja electrónica (.wks) **0** = Sin archivo de hoja electrónica

Por ejemplo, si está utilizando el puerto número 1 del PC, el primer número que seguirá a la palabra de instrucción **BM25LOAD** sería 1(al que le precederá un espacio).

Si quiere salvaguardar los datos de medición en un formato de hoja electrónica, el segundo número que seguirá a la instrucción **BM25LOAD** sería **1** (también precedido por un espacio). De lo contrario, el número sería **0**.

p.ej., escriba: **BM25LOAD 1 1** (fíjese en el espaciado del parámetro)

Debería hacerse funcionar el programa antes de conectar ***S1-5005.***

Para empezar el programa desde la guía **C:**,

1. Escriba **CD\BM25** pulse <ENTER> La guía del cursor cambia a **C:\BM25.**
2. Escriba las palabras de instrucción **BM25LOAD** seguido de <espacio> **parámetro** <espacio> **parámetro**.
3. Cuando funcione el software, el color de la pantalla cambia a azul y aparecerá la pantalla de la vía del archivo. Si el archivo de la hoja electrónica no ha sido seleccionado, sólo aparecerá el nombre de un archivo.

Cada vez que se ejecuta el programa, el nombre y la vía pasarán al valor implícito **C:\BM25\loaded.dat**. Puede entrarse un nuevo nombre de vía de fichero sobrescribiendo el implícito. Utilice las teclas ≠ para pasar a la siguiente entrada. Si se ha seleccionado un formato (**1**) de archivo de hoja electrónica,

Copiado de datos

el nombre del fichero implícito **loaded** podrá cambiarse sobrescribiendo el mismo. Asegúrese de que -wks no se mueve o altera.

4. Al terminarse, pulse <ENTER> para pasar a la ventana de copiado.
5. El ***S1-5005*** podrá conmutarse ahora pulsando una vez el interruptor de '**conexión/desconexión**'. Al final de la prueba de calibración, la versión del software aparecerá en la ventana de transferencia.

Nota: Si no se ha identificado el instrumento pasado el período de calibración, es que ha habido un error. Desconecte el instrumento, detenga el programa de software y compruebe las conexiones del cable de 9 rutas. Vuelva a empezar el software asegurándose de que se ha entrado el puerto correcto en la guía de instrucciones.

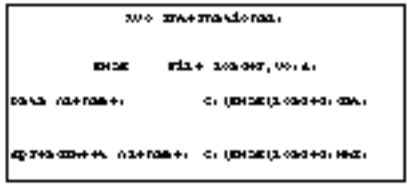

6. Regule los ajustes de prueba necesarios y la duración en el ***S1-5005***. Una prueba de 90 minutos de duración creará un archivo de datos de aproximadamente 43 KB. El archivo de datos estándar tiene espacio aproximadamente para nueve pruebas de 10 minutos.
7. Para empezar una prueba y el copiado, pulse el botón de arranque rojo durante al menos 1 segundo. Se visualizará el texto identificando los ajustes de la prueba (Resistencia en MΩ) seguido de los resultados medidos a intervalos de 5 segundos.
8. Al terminarse totalmente una prueba, aparecerá la palabra '**Finished'** (Acabado), junto con los datos medidos en notación científica.

   p.ej. 5,108e + 04 = 5,108 MΩ x 10^4 = 51,08 GΩ

Nota: Los datos copiados contienen normalmente más cifras significativas que el resultado 'redondeado' que aparece en el instrumento.

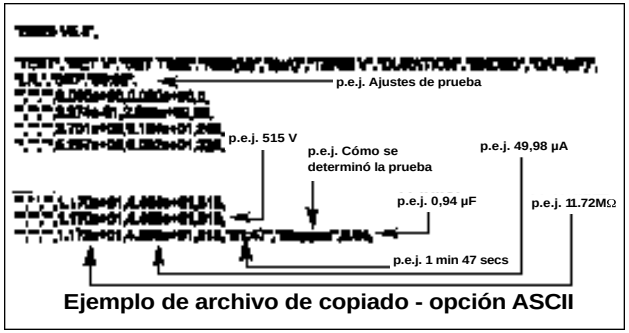

Ejemplo de archivo de copiado - opción ASCII

9. Al final de un copiado se habrán creado uno o dos archivos en el emplazamiento de vía implícito o específico. Estos ficheros pueden importarse entonces a diferentes bases de datos, hojas electrónicas o paquetes de software de gráficas. Véase **Apéndice 2**.

Nota: Una prueba puede pararse o empezarse en cualquier punto sin afectar a los datos de copiado. Si se termina una prueba antes de su duración preajustada, pulsando '**Esc**' se convertirán los datos existentes para esa prueba.

Apéndice 1

Resultados visualizados al final de cada prueba

Prueba IR

Temporizador	Indicador digital	Indicador de voltaje
Duración de prueba	Apagado	Voltaje de prueba final
Duración de prueba	R	Voltaje de prueba final
Duración de prueba	I	Voltaje de prueba final
Duración de prueba	µF	Voltaje de prueba final

Tiempo de prueba por exclusión de 30 minutos.

Nota: Una lectura del valor de capacitancia se ofrece solamente disponible si la prueba ha estado en marcha durante más de un minuto, y siempre que la lectura no esté fuera del alcance.

Prueba PI

Tiempo de prueba por exclusión de 10 minutos. La terminación prematura de la prueba todavía permite calcular y visualizar los resultados de la prueba.

Temporizador	Indicador digital	Indicador de voltaje	Otros
Duración de prueba T3	Apagado	Voltaje de prueba final	
Tiempo T2	PI (T1 a T2)	Voltaje en el tiempo T2	Cursor PI parpadea
Tiempo T3	PI (T2 a T3)	Voltaje en el tiempo T3	Cursor PI parpadea
Tiempo T1	R a T1	Voltaje en el tiempo T1	
Tiempo T2	R a T2	Voltaje en el tiempo T2	
Tiempo T3	R a T3	Voltaje en el tiempo T3	
Tiempo T3	µF	Voltaje en el tiempo T3	

Nota: Una lectura del valor de capacitancia se ofrece solamente disponible si la prueba ha estado en marcha durante más de un minuto, y siempre que la lectura no esté fuera del alcance.

Apéndice 1

Prueba DD
Tiempo de prueba por exclusión de 30 minutos, seguido de un tiempo de descarga de 1 minuto. La terminación prematura de la prueba todavía permite calcular y visualizar los resultados de la prueba.

Temporizador	Indicador digital	Indicador de voltaje	Otros
Duración de prueba T3	Apagado	Voltaje de prueba final	
Tiempo T3	Valor DD	Voltaje en el tiempo T3	Cursor DD parpadea
Tiempo T3	R a T3	Voltaje en el tiempo T3	
Tiempo T3	I a T3 + 1 minuto	Voltaje en el tiempo T3	
Tiempo T3	P2 / P1	Voltaje en el tiempo T2	Cursor PI parpadea
Tiempo T3	µF	Voltaje en el tiempo T3	

Nota: Una lectura del valor de capacitancia se ofrece solamente disponible si la prueba ha estado en marcha durante más de un minuto, y siempre que la lectura no esté fuera del alcance.

Prueba SV
El tiempo de prueba ajustado a 5 minutos solamente. La terminación prematura de la prueba puede causar la visualización de ciertos resultados como **- - -**.

Temporizador	Indicador digital	Indicador de voltaje
Duración de prueba	Apagado	Voltaje de prueba final
1,00 minutos	R (a 1 minuto)	Voltaje a 1 minutos
2,00 minutos	R (a 2 minutos)	Voltaje a 2 minutos
3,00 minutos	R (a 3 minutos)	Voltaje a 3 minutos
4,00 minutos	R (a 4 minutos)	Voltaje a 4 minutos
5,00 minutos	R (a 5 minutos)	Voltaje a 5 minutos
Duración de prueba	µF	Voltaje de prueba final

Nota: Una lectura del valor de capacitancia se ofrece solamente disponible si la prueba ha estado en marcha durante más de un minuto, y siempre que la lectura no esté fuera del alcance.

Apéndice 2

Ejemplos de la representación de información de salida RS232

TEST	SET V	SET TIME	RES(M)	I(uA)	TERM V	DURATION	ENDED	CAP(uF)
Leakage	2500	02:05						
			36860	0.07029	2591			
			44570	0.05813	2591			
			47850	0.05417	2592			
			49540	0.05232	2592			
			50260	0.05158	2592			
			53390	0.04856	2592			
			53710	0.04826	2592			
			53960	0.04804	2592			
			54220	0.04781	2592	02:05	Finished	0.01

Ejemplo de formato de hoja eléctrica

Encabezamiento	Tipo de prueba
IR	R
Fuite	I
Burn	Burn
DD	DD
PI	PI
SV	SV

Columnas adicionales al final para resultados específicos de la prueba DD o de la prueba PI

Ejemplo de formato ASCII

```
"TEST","SET V","SET TIME","RES(M)","I(uA)","TERM V","DURATION","ENDED","CAP(uF)
"Leakage","2500","02:05",
"","","",3.686e+04,7.029e-02,2591,
"","","",4.457e+04,5.813e-02,2591,
"","","",4.785e+04,5.417e-02,2592,
"","","",4.954e+04,5.232e-02,2592,
"","","",5.026e+04,5.158e-02,2592,
"","","",5.339e+04,4.856e-02,2592,
"","","",5.371e+04,4.826e-02,2592,
"","","",5.396e+04,4.804e-02,2592,
"","","",5.422e+04,4.781e-02,2592,"02:05","Finished",0.01,
```

Reparacione y Garantia

El circuito del instrumento contiene dispositivos sensibles a la electricidad estática y deberá tenerse cuidado cuando se maneje el panel de circuito impreso. No deberá utilizarse ninguna protección de un instrumento que haya sido dañada y deberá enviarse para ser reparada por personal debidamente preparado y capacitado. Se dañará la protección si, por ejemplo, el instrumento muestra desperfectos visibles, no realiza las mediciones esperadas, se ha visto sujeto a un almacenamiento prolongado bajo condiciones desfavorables o ha estado expuesto a presiones rigurosas de transporte.

Los instrumentos nuevos tienen una garantia de 1 año a partir de la fecha de adquisicion del usuario.

Nota: El abrir la caja invalidará automáticamente la Garantía que cubre el instrumento, a menos que haya sido realizado por una organización aprobada.

Reparación de Instrumentos y Piezas de Repuesto
Para un servicio de los instrumentos ***MEGGER***® contacte por favor con:

AVO INTERNATIONAL **o** **AVO INTERNATIONAL**

Archcliffe Road
Dover
Kent CT17 9EN
Angleterre

Tel.: +44 (0) 1304 502243
Fax: +44 (0) 1304 207342

Valley Forge Corporate Center
2621 Van Buren Avenue
Norristown
PA 19403 USA

Tel.: +1 (610) 676-8579
Fax: +1 (610) 676-8625

o una compañia de reparaciones aprobada.

Companias de reparaciones aprobadas
Varias compañias independientes han sido aprobadas para realizar trabajos de reparación de la mayoría de los instrumentos ***MEGGER***®, utilizando auténticas piezas de repuesto ***MEGGER***®. Consulte con su Agente/Distribuidor con referencia a las pi ezas de repuesto, facilidad es de reparación y asesoramiento sobre la mejor línea de conducta a seguir.

Devolviendo un Instrumento Para Su Reparación
Si se devuelve un instrumento al fabricante para su reparación, deberá enviarse a porte pagado a la dirección adecuada. Al mismo tiempo, deberá adjuntarse una copia de la factura y de la nota de envío, por correo aéreo, a fin de acelerar los trámites de aduanas. Se enviará un presupuesto de reparación en el que aparecerá la tarifa de flete de retorno y otros gastos, si procede, antes de empezar el trabajo en el instrumento.

AVO INTERNATIONAL

Archcliffe Road
Dover
Kent, CT17 9EN.
England.
Tel: +44 (0) 1304 502100
Fax: +44 (0) 1304 207342

PO Box 9007
Valley Forge
PA 19484-9007
U.S.A.
Tel: +1 (610) 676-8500
Fax: +1 (610) 676-8610

4271 Bronze Way
Dallas
TX 75237-1017
U.S.A.
Tel: +1 (800) 723-2861 (U.S.A. only)
Tel: +1 (214) 330-3203 (International)
Fax: +1 (214) 337-3038

MEGGER SARL
29 Allée de Villemomble
93340 Le Raincy
Paris, France
Tel: +33 (1) 43.02.37.54
Fax: +33 (1) 43.02.16.24

This instrument is manufactured in the United Kingdom
The company reserves the right to change the specification or design without prior notice
MEGGER is the registered Trade Mark of **AVO INTERNATIONALLIMITED.**

Copyright ©, **AVO INTERNATIONALLIMITED**
Part No. 6172-374 - Edition 4 - Printed in England - 03HH

AVTM830280
Rev. B
May 2003

Instruction Manual AVTM830280
for
Transformer Ohmmeter

Catalog No. 830280

High-Voltage Equipment
Read the entire manual before operating.

Aparato de Alto Voltaje
Antes de operar este producto lea este manual enteramente.

Megger.

Valley Forge Corporate Center
2621 Van Buren Avenue
Norristown, PA 19403 U.S.A.

610-676-8500
www.megger.com

Megger.

Copyright 2003 by Megger. All rights reserved.

The information presented in this manual is believed to be adequate for the intended use of the product. If the product or its individual instruments are used for purposes other than those specified herein, confirmation of their validity and suitability must be obtained from Megger. Refer to the warranty information included in this instruction manual. Specifications are subject to change without notice.

Table of Contents

1. GENERAL INFORMATION 1
1.1 About The Transformer Ohmmeter 1
1.2 Features 2
1.3 Upon Receipt of Product 2
1.4 Unpacking and Inspection 3
1.5 Safety First 3
1.6 How To Use This Manual 3
1.6 Preparation for Use 4
1.7 Line Supply Voltage 4
1.8 Repacking and Shipment 4
1.9 Specifications 5
1.10 Accessories Furnished 6
1.11 Changes 7
1.12 Warranty 7
2. SAFETY 9
2.1 Introduction 9
2.2 General Safety Precautions 9
2.3 Safety In Using The Transformer Ohmmeter 10
3. OPERATING INSTRUCTIONS 11
3.1 Panel Controls and Operating Functions 11
3.2 Principle of Operation 14
3.3 General Operating Instructions & Instrument Self-Check 15
3.4 Procedure for Single Phase Transformer Testing 16
3.5 Procedure for Three Phase Transformer Testing 21
3.6 Testing Transformers with Tap Changers 30
3.7 Testing Voltage Regulators 31
4. SERVICE AND MAINTENANCE 35
4.1 Description 35

Figures

Figure 1: Panel Controls and Operating Functions 13
Figure 2: Single Winding Measurement 17
Figure 3: Dual Winding Test 20
Figure 4 21
Figure 5 22
Figure 6 23
Figure 7 24
Figure 8- Typical 3 Phase Delta Network 25
Figure 9 26
Figure 10 27
Figure 11 27
Figure 12 28
Figure 13 28
Figure 14 29
Figure 15 29
Figure 16: Odd Position Tap 31
Figure 17: Even Position Tap 31
Figure 18: Connection to a Regulator 33

1. GENERAL INFORMATION

1.1 ABOUT THE TRANSFORMER OHMMETER

The **Megger.** Transformer Ohmmeter is a line-operated, field-portable instrument designed specifically to measure the dc resistance of all types of magnetic windings safely and accurately.

Its predominant use is the measurement of the dc resistance of all types of transformer windings within the defined ranges of current and resistance.

It can also test rotating machine windings and perform low-current resistance measurements on connections, contacts and control circuits.

Three features combine to make this instrument unique: dual measurement, load tap-changer testing and safety shutdown.

The dual set of potential inputs measure the resistance of the primary and secondary windings of a single- or three-phase transformer simultaneously. The dual reading characteristic will speed up the measurement when it is used to test windings on delta-delta connected windings on three-phase transformers.

Due to circulating currents induced when the test current is applied to the primary winding, this type of measurement is countered by the same current on the secondary winding. This action attenuates the circulating current and the reading time is improved tenfold.

The Transformer Ohmmeter is extremely useful when testing the windings and contact resistance on tap-changers with make-before-break contacts and voltage regulators.

The internal shutdown circuit will be triggered by a voltage kickback of a few microseconds if the tap-changer contacts are opened when the tap-changer circuit is operated through all of the tap positions.

This action will check for pitted or misaligned contacts as the instrument will shut down if either condition occurs.

Users are protected by the shutdown circuit safety feature: any inadvertent disconnection of a test lead or loss of power to the instrument will safely discharge the energy stored in the test sample.

The Transformer Ohmmeter's wide resistance range (1 micro-ohm to 1999 ohms) gives the optimum resolution for even the lowest winding resistance tested.

1.2 FEATURES

- Direct digital reading saves time, no balancing is required.
- Built-in discharge circuit safely discharges the specimen when test is completed, if lead accidentally disconnects or if power is lost.
- Electromechanical safety indicator gives a visual indication of a charged or discharged specimen, even if power to the instrument is lost.
- Two independent measuring channels allow simultaneous testing of primary and secondary windings or measurement of two phases at a time.
- The sensitive surge detection circuitry monitors the contact operation of on-load tap-changers for the proper make-before-break sequence. If an open circuit condition exists, the instrument shuts down immediately.
- High-accuracy, four-terminal bridge: no lead compensation required.
- Electronically generated and regulated current supply overcomes high-inductance transformers quickly, allowing fast measurements to be taken. Display of measurement occurs only after test current stabilizes.
- Wide resistance range is suitable for testing a wide variety of transformers.
- Lightweight and portable, the Transformer Ohmmeter is ideal for use in shop or substation environments.
- Overtemperature protection provides automatic current shutdown and LED indication to prevent instrument damage.
- Instrument and accessories come in a foam-lined transport case.

1.3 UPON RECEIPT OF PRODUCT

Check the equipment received against the packing list to ensure that all materials are present. Notify Megger of any shortage (tel: 610-676-8500).

Examine the instrument for damage received in transit. If you find damage, file a claim with the carrier at once. Also notify Megger or its nearest authorized sales representative, and describe the damage in detail.

1.4 UNPACKING AND INSPECTION

Prior to shipment, this instrument was electrically tested and mechanically inspected and found to meet specifications and be free of mechanical defects.

After unpacking the instrument, visually inspect the instrument and accessories for damage. If evidence of damage is present YOU must contact the carrier who transported the unit and file a claim in writing. The shipping container and packing material should be retained for inspection by the carrier's agent. Electrical operation per Section 3 should be checked as soon as possible after shipment.

1.5 SAFETY FIRST

Be sure to read the safety information in Section 2 thoroughly and observe all safety precautions and recommendations. **Safety is the responsibility of the user.**

1.6 HOW TO USE THIS MANUAL

Typographic conventions

- Figures and tables are numbered in sequence by section
- Numbered lists show procedural steps
- Bullets list items and options
- Warnings, Cautions and Notes
  - *Warnings* alert you to conditions that are potentially hazardous to people
  - *Cautions* alert you to possible damage to equipment
  - *Notes* provide important explanation or assistance

WARNING

DO NOT DISCONNECT LEADS BEFORE INDICATOR (7) IS OFF (BLACK)!!!

CAUTION

It should be carefully noted that the jumper in Figure 3 be connected to opposite polarities of transformer in order to achieve correct results.

NOTE

For larger transformers, the resistance display (14) should be observed and resistance readings taken when the reading stabilizes. The drift in the indicated resistance reading is due to the inductance of the transformer. For small transformers the drift lasts for only a few seconds; for single-phase high voltage transformers (500 kV), the drift may last for a fraction of a minute; for large delta connected transformers the drift may last longer as a result of circulating current.

e.g. 345MVA, 500kV single-phase transformer requires approximately 2 minutes for the display to settle.

1.6 PREPARATION FOR USE

THIS INSTRUMENT IS DESIGNED TO OPERATE WITH HIGHLY INDUCTIVE TRANSFORMERS. ANY BREAK IN CONNECTION WHILE D.C. CURRENT IS FLOWING MAY RESULT IN HIGH VOLTAGE FLASHOVER. It is highly recommended that the operator familiarize himself with the controls and functions detailed in Section 3 prior to use. ALL SAFETY PROCEDURE AND PRECAUTIONS MUST BE FOLLOWED WHEN OPERATING ON LINES WITH LETHAL VOLTAGES OF HIGH CAPACITY.

1.7 LINE SUPPLY VOLTAGE

This instrument is shipped from the factory for operation on a 115 volt, 60Hz line. To prevent damage to the instrument, select the proper line voltage on the front panel selector before connection to a line supply.

1.8 REPACKING AND SHIPMENT

To insure proper shipment of this instrument, it is recommended that the original shipping case be retained. If being returned for calibration or service, please attach a card to the instrument specifying the owner, model and serial number and service required.

1.9 SPECIFICATIONS

The detailed specifications for the model are given below.

Input Power:	120/240 V, 50/60Hz, 350 VA
Measurement Principle:	Electronic Thompson-type circuit
Current Supply Principle:	Electronically generated and regulated
Test Current:	Switch selectable
Ranges:	5 mA, 50 mA, 500 mA, 5 A (dc)
Open Circuit Test Voltage:	30 V dc
Rating:	Continuous use on all ranges
Indication:	Mechanical indicator (indication of current flow even when instrument turned off or unplugged). Output current displayed on display "A"(in %).
Over Temperature Protection:	Automatic current shutdown with L.E.D. indication of over temperature condition for 5A range.
Resistance Measurements:	
Inputs:	Two isolated high impedance inputs, each with separate range control and protection provided for flashover caused by inductive kickback

Ranges (ohms):

Nominal	Resolution	Maximum Display
2m	0.001m	1.999m
20m	0.01m	19.99m
200m	0.1m	199.9m
2	0.001	1.999
20	0.01	19.99
200	0.1	199.9
2000	1.0	1999

Accuracy: ±0.5% reading, ±0.5% full scale (when current has stabilized).

Overrange:	Indicated by leading number 1 displayed with all other digits blanked.	

Operation:

Environmental:	Operating:	32 to 104° F (0 to 40°C) RH to 80%
	Storage:	-40 to 149° F (-40 to +65°C)
Temperature Coefficients:	±0.05% of applicable accuracy specification per °C of resistance range.	
Displays:	Two high-temperature, 0.7 in. (18 mm), liquid crystal 3 ½-digit displays showing 1999 at full scale. Update rate is approximately three times per second.	
Physical:	Instrument and accessories supplied with portable foam lined carrying case. Case has hinged opening from above with a lockable latch.	
Sizes:	Instrument:	11 H x 16 W x 10.5 D in.
		280 H x 406 W x 267 D mm
	Case:	13 H x 20 W x 21 D in.
		330 H x 508 W x 533 D mm
Weight:	Instrument:	Net 40 lb (18 kg)
	Shipping:	75 lb (34 kg)

1.10 ACCESSORIES FURNISHED

Each instrument is supplied complete with:

- Two sets of potential leads, 33 ft (10 m)
- One set of current leads, 33 ft (10 m)
- One shorting lead, 9.9 ft (3 m)
- Universal bushing adapters (set of 4)
- AC power cord
- One operating and instruction manual
- One transport case

1.11 CHANGES

Please note that this instrument is subject to continuous development and improvement. This instrument may therefore incorporate minor changes in detail from the information contained herein.

1.12 WARRANTY

Megger warrants this instrument sold by us or our authorized agents, to be free from defects in material and workmanship for a period of 12 months from date of shipment. During the warranty period, Megger will, at our option, repair or replace the Instrument or part thereof which proves to be defective providing:

(1) The Instrument is returned properly packed and transportation prepaid with prior authorization from us or our appointed agent,

(2) The Instrument has not been altered, modified or repaired by unauthorized personnel and,

(3) That our examination discloses to our satisfaction that any improper operation or failure was the result of defective material or workmanship and was not the result of improper use, negligence or accident, exceeding environmental limits, or connecting the instrument to incompatible equipment.

This warranty is exclusive and is given and accepted in lieu of all other warranties, express or implied, and constitutes fulfillment of all our liabilities to the purchaser. Megger specifically disclaims the implied warranties of merchantability and fitness for a specific purpose. We assume no liability, in any event, for consequential damages, for anticipated or lost profits, for personal injury due to use or accident, for incidental damages or loss of time or other losses incurred by the purchaser or any third party in connection with instruments covered by this warranty or otherwise.

Megger.

2. SAFETY

2.1 Introduction

Megger has designed the Transformer Ohmmeter and the recommended operating procedures with careful attention to safety. It performs formal safety reviews of the initial design and any subsequent changes to all new Megger products. The safety review covers areas over and above those included in applicable IEC and ANSI standards.

Regardless of these efforts, it is not possible to eliminate all hazards from electrical test equipment or to foresee every possible hazard. You are therefore urged not only to follow the safety rules in this manual, but also to consider carefully all safety aspects of the test before proceeding. **Safety is the responsibility of the user.**

The design of this equipment follows safety specifications IEC 1010-1 and ANSI/ISA 582.01 and meets the requirements for Class I, Installation Category II equipment.

Megger recommends that a qualified operator attend the system at all times while it is in operation. Only qualified service personnel should replace components or make internal adjustments.

2.2 General Safety Precautions

The equipment and the cable to which the Transformer Ohmmeter connects are sources of high-voltage electrical energy. Observe the following safety precautions:

- Observe all safety warnings on the equipment. They identify areas of immediate hazard that could result in injury or death.
- Use this equipment only for the purposes described in this manual.
- Treat all terminals of high-voltage power equipment as potential electric shock hazards.
- Use all practical safety precautions to prevent contact with energized parts of the equipment and related circuits.
- Use suitable barriers, barricades, or warnings to keep persons not directly involved with the work away from test activities.
- Never connect the test equipment to energized cables.
- Do not connect to energized equipment or use in an explosive atmosphere.
- Use the grounding and connection procedures recommended in this manual.
- Observe strictly the warning and caution notices used throughout this manual (see 'How to Use This Manual" on page 3).

2.3 SAFETY IN USING THE TRANSFORMER OHMMETER

Safety is the responsibility of the user.

When applying current to a transformer with very high inductance, care should always be taken not to remove current leads while current is still flowing. This causes an extremely high voltage to develop across the point where current is broken. With correct conditions, this voltage may even be lethal to the operator breaking the current path.

The Megger Transformer Ohmmeter has built-in safety protection. This safety feature is present in the form of an alternate route through either of the potential leads.

Example: If a current lead is disconnected while current is flowing through the transformer, the current will flow through the alternate path of the potential lead without damage to instrument or electrical shock to operator.

WARNING

It is very important, therefore, not to connect potential leads on top of or to close to current leads. In this way, if one lead falls off the transformer, the other lead will automatically follow.

WARNING

The Transformer Ohmmeter is protected in the event of both potential and current lead falling off at the same time. This does not mean, however, that the operator will not feel the high voltage that will be developed (if he is standing near the area where the lead disconnects).

3. OPERATING INSTRUCTIONS

3.1 PANEL CONTROLS AND OPERATING FUNCTIONS

This section details and describes the operating functions of the Transformer Ohmmeter. Refer to Figure 1.

1. Power ON.

   Flipping this switch upwards will activate the instrument. With current control (4) in the center position, ready LED (5) will illuminate 15 seconds after the instrument is turned on.

2. Line Input Socket.

   This international line socket also contains the line fuse and a spare fuse.

3. Line Voltage Selector.

   The instrument is configured at the factory for 115 volt operation. Failure to select the correct line voltage could result in damage to the instrument.

4. Current Control.

   This switch is used to initiate current flow from the instrument (up) and to activate a process whereby the device under test is discharged (down).

5. Ready L.E.D.

   This L.E.D. must be illuminated to initiate a given test. This indicator will be inactive under the following conditions

   - the test has been initiated
   - the test specimen is undergoing discharge
   - the surrounding electrical interference exceeds the instruments suppression capability

6. Over Temperature L.E.D.

   This L.E.D. illuminates when the instruments internal components have exceeded their thermal capacity. This condition typically occurs after extended operation on the 5A range. A period of approximately 20 minutes is required before the instrument will again operate.

7. Current Indicator.

   This mechanical device indicates the presence of current flow through the output terminals (9) and/or excitation voltage. This process operates independently of the power line voltage because current may be flowing in the test leads after the instrument has been turned off.

8. Potential Input "A".

   Connected across a transformer winding, this input measures the winding voltage drop and displays the related resistance value on display "A" (15).

9. Current Output.

   Connected across a transformer winding, this output supplies a selected D.C. current through the winding.

10. Potential Input "B".

    Connected across a transformer winding, this input measures the winding voltage drop and displays the related resistance value on display "B" (16).

11. Current Selector.

    This switch allows selection of the test current which will be supplied to the transformer windings via output terminals (9). It also changes resistance ranges, increasing resolution with an increase in the test current range.

12. Range Selector "A".

    This switch changes the resistance range for potential input "A".

13. Range Selector "B".

    This switch changes the resistance range for potential input "B".

14. Display Selector.

    This switch selects the value to be monitored on display "A". (Either percent of the test current or the load resistance).

15. Display "A".

    Value displayed is either the resistance related to potential input "A" (8) or percent of the test current output (9).

16. Display "B".

    Value displayed is resistance related to potential input "B" (10).

17. Resistance Range Table.

    This table shows the maximum allowable resistance for the combination of current selector (11) and range selector (12 or 13).

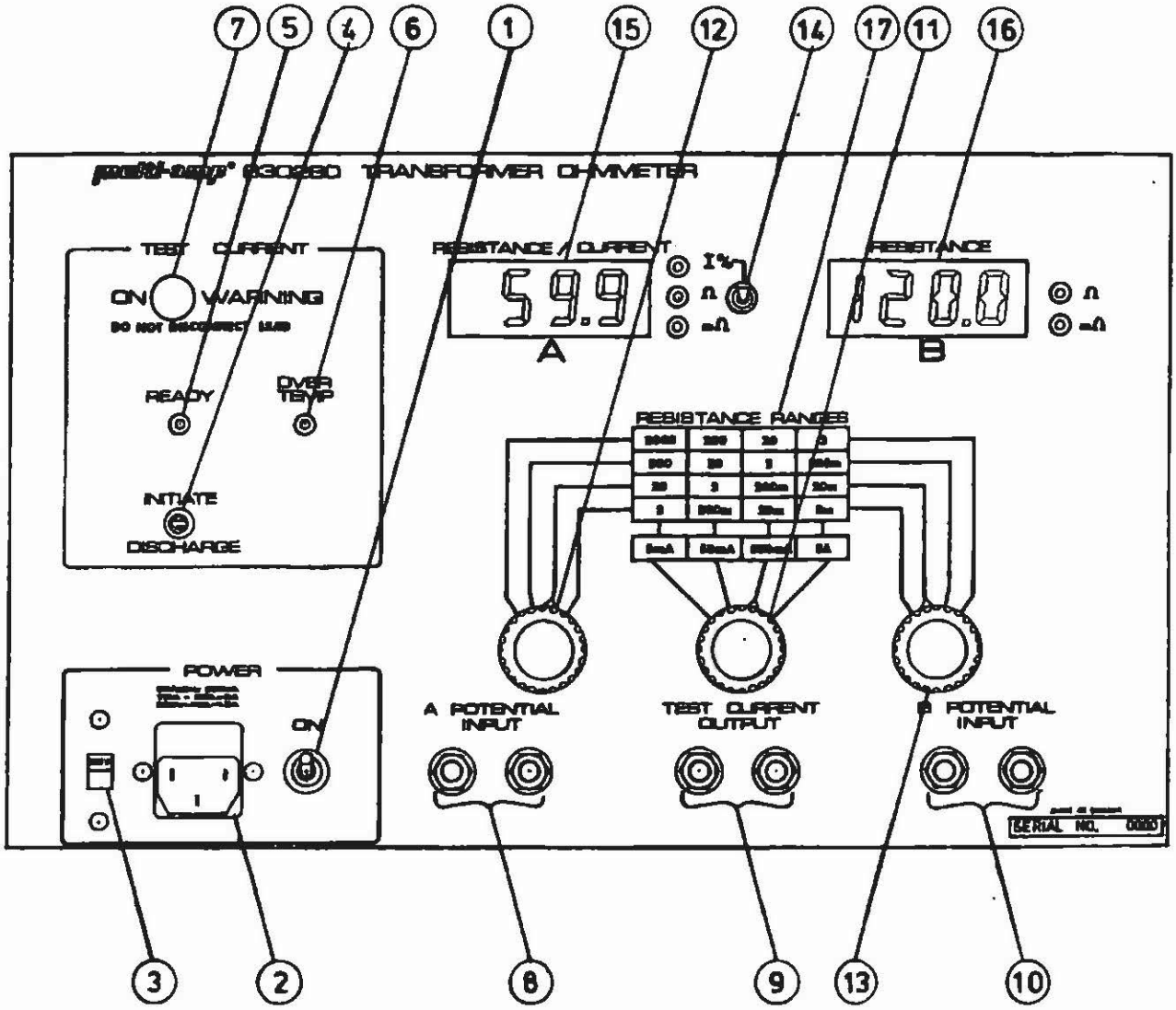

FIGURE 1: PANEL CONTROLS AND OPERATING FUNCTIONS

3.2 PRINCIPLE OF OPERATION

The Megger Transformer Ohmmeter measures the resistance of a transformer winding by:

1. Applying a D.C. current through the transformer winding and an internal standard current shunt.
2. Measuring the D.C. voltages across the winding and the shunt.
3. Comparing the two voltages and displaying their ratio as resistance.

This method neglects lead resistance because it is independent of current. All readings are direct and therefore no multiplication factor need be applied when changing current ranges.

When testing transformers having large inductance, the D.C. current source must be extremely stable. This is seen in the formula for the D.C. voltage across an inductor:

$$V\ D.C. = I \times R + L\ dI/dt$$

Where,

V D.C.	=	D.C. voltage across transformer winding.
I	=	D.C. current through transformer winding.
R	=	Resistance of the Tx winding.
L	=	Inductance of Tx winding.
dI/dt	=	Changing value of current (ripple) (Equals "0" for steady D.C.).

For optimum operation, the Transformer Ohmmeter resistance displays will only stay on with test current larger than 55% of set current range. If current does not reach the required 55%, resistance display will not show any value.

3.3 GENERAL OPERATING INSTRUCTIONS & INSTRUMENT SELF-CHECK (see Figure 1).

1. Connect line cord to instrument and plug into power socket (ensure that line voltage selector (3) is set to correct voltage).
2. Set the following:
   a. Current Control (4): Middle position.
   b. Display Selector (14): Up position.
   c. Range Selector "A" (12): Left most position.
   d. Range Selector "B" (13): Right most position.
   e. Current Selector (11): 5mA.
3. Short current output (9); Short potential input "A" (8).
4. Turn power switch (1) "ON". "Ready" L.E.D. (5) should illuminate.
5. Push current control switch (4) up to initiate current flow. Release when current indicator (7) comes on.
6. Observe display "A". Indication should show an increasing number with "%" L.E.D. illuminated.
7. Reading should settle. This value has no effect on accuracy of resistance readings.
8. Switch display selector (14) down.
9. Indication should be "000" and ohms L.E.D. illuminated.
10. Set momentary current control (4) "down". Current should discharge and current flow indicator (7) should turn off.
11. If desired, set current selector (11) to another current and proceed with steps 3 to 11.

ALTERNATE

1. For step 3 above; place a standard current shunt or standard resistor (of known value, less than 2,000 ohms) between current output (9). Place potential input "A" (8) across inside of current shunt.
2. Following steps 1 to 11 above (with the exception of step 3), the value of the standard shunt should be read on display "A".

WARNING

When testing a transformer or regulator, make sure that a good ground is placed on the test specimen as shown on all connection diagrams.

Megger.

3.4 PROCEDURE FOR SINGLE PHASE TRANSFORMER TESTING

This procedure describes only the basic connections and control settings for a single phase, two winding transformer. Following this description will be connections and any special notes for three phase transformers. Different types and sizes will vary the settling time of the test current and hence vary the time required to obtain readings. Because all input and output terminals are totally isolated on the Transformer Ohmmeter, no grounds need be removed from the transformer under test.

See Section 3.1 for explanation and location of controls.

3.4.1 SINGLE WINDING TEST

See Figure 2 for connection to the test transformer.

PROCEDURE:

1. Connect line cord to unit and plug into 120V socket.
2. Set the following conditions:

   a. Display Selector (14): up position.
   b. Range Selector "A" (12): left most position.
   c. Range Selector "B" (13): right most position.
   d. Current Selector (11): to desired test current (guide by resistance table on face plate).

3. Connect current output (9) to test specimen winding. See Figure 2.
4. Connect "B" potential input (10) to test specimen winding. Do not clip potential leads on to the current leads, since this will add contact resistance to the measurement. Potential leads should always be placed inside (between) current leads. See Figure 2.
5. Turn power switch (1) "ON". "READY" L.E.D. (5) should illuminate.
6. Push current control switch (4) up to initiate current flow. Release when current indicator (7) comes ON.
7. Display "A" (15) indicates current output (in %). As output current approaches steady value, display "B" (16) comes on and indicates resistance of specimen.

NOTE

For larger transformers, the resistance display (14) should be observed and resistance readings taken when the reading stabilizes. The drift in the indicated resistance reading is due to the inductance of the transformer. For small transformers the drift lasts for only a few seconds; for single phase high voltage transformers (500 kV), the drift may last for a fraction of a minute; for large delta connected transformers the drift may last longer as a result of circulating current.

e.g. 345MVA, 500kV single phase transformer requires approximately 2 minutes for the display to settle.

8. The range switch "B" (13) may require re-setting to a more suitable resistance range.

9. When measurement is complete, push the current control switch (4) down to terminate measurement and discharge current. Discharge is complete when current indicator (7) is off (black).

WARNING

DO NOT DISCONNECT LEADS BEFORE INDICATOR (7) IS OFF (BLACK)!!!

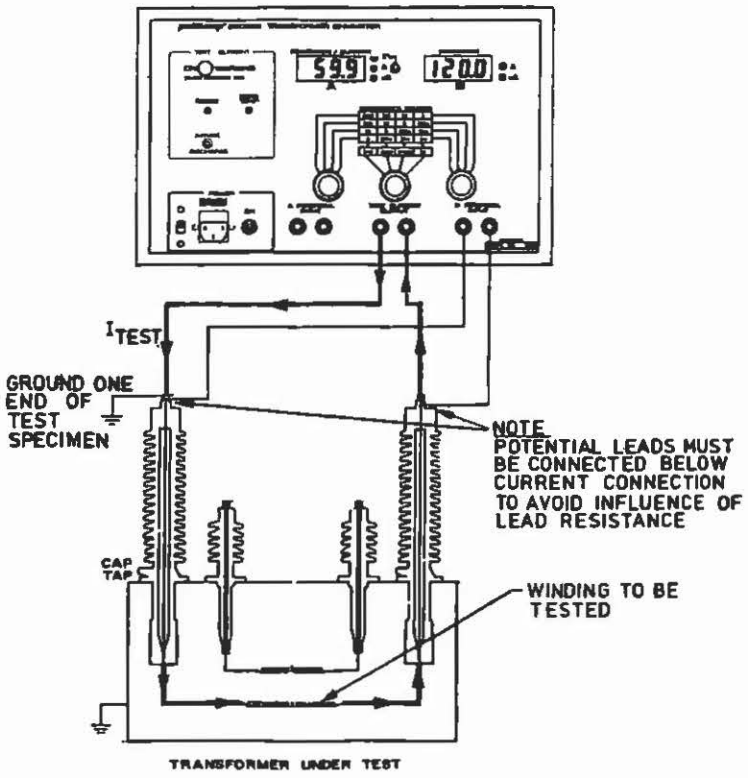

FIGURE 2: SINGLE WINDING MEASUREMENT

3.4.2 DUAL WINDING TEST

This procedure described below is for testing both windings (high and low) on a single phase transformer.

See Figure 3 for connection to test transformer.

CAUTION

It should be carefully noted that the jumper in Figure 3 be connected to opposite polarities of transformer in order to achieve correct results.

PROCEDURE:

1. Connect line cord to unit and plug into line socket.
2. Set the following conditions:
   a. Display Selector (14): down position.
   b. Range Selector "A" (12): left most position.
   c. Range Selector "B" (13): right most position.
   d. Current Selector (11): to desired test current. Best results will be at highest current (guide by resistance table on face plate).
3. Connect current output (9) to test specimen winding. See Figure 3.
4. Connect "A" potential input (8) to H1 and H2 terminals of test transformer. Potential leads should be placed inside current lead and shorting jumper.
5. Connect "B' potential input (10) to X1 and X2 terminals of test transformer. Potential leads should be placed inside current lead and shorting jumper.
6. Turn power Switch (1) "ON". "READY" L.E.D. (5) should illuminate.
7. Push current control switch (4) up to initiate flow. Release when current indicator (7) comes on.
8. Observe display "A". Indication should show an increasing value with "%" L.E.D. illuminated.
9. When reading settles indication will automatically switch to "ohm" indication and display resistance of H1 - H2 winding.
10. Display "B" will now indicate resistance of X1 - X2 winding.
11. To obtain best resolution for both display A and B, adjust range selectors (12 and 13).

12. When measurement is complete, push the momentary current control switch (4) down to terminate measurement and discharge current. Discharge is complete when current indicator (7) is OFF (black).

WARNING

DO NOT DISCONNECT LEADS BEFORE INDICATOR (7) IS OFF (BLACK)!!!

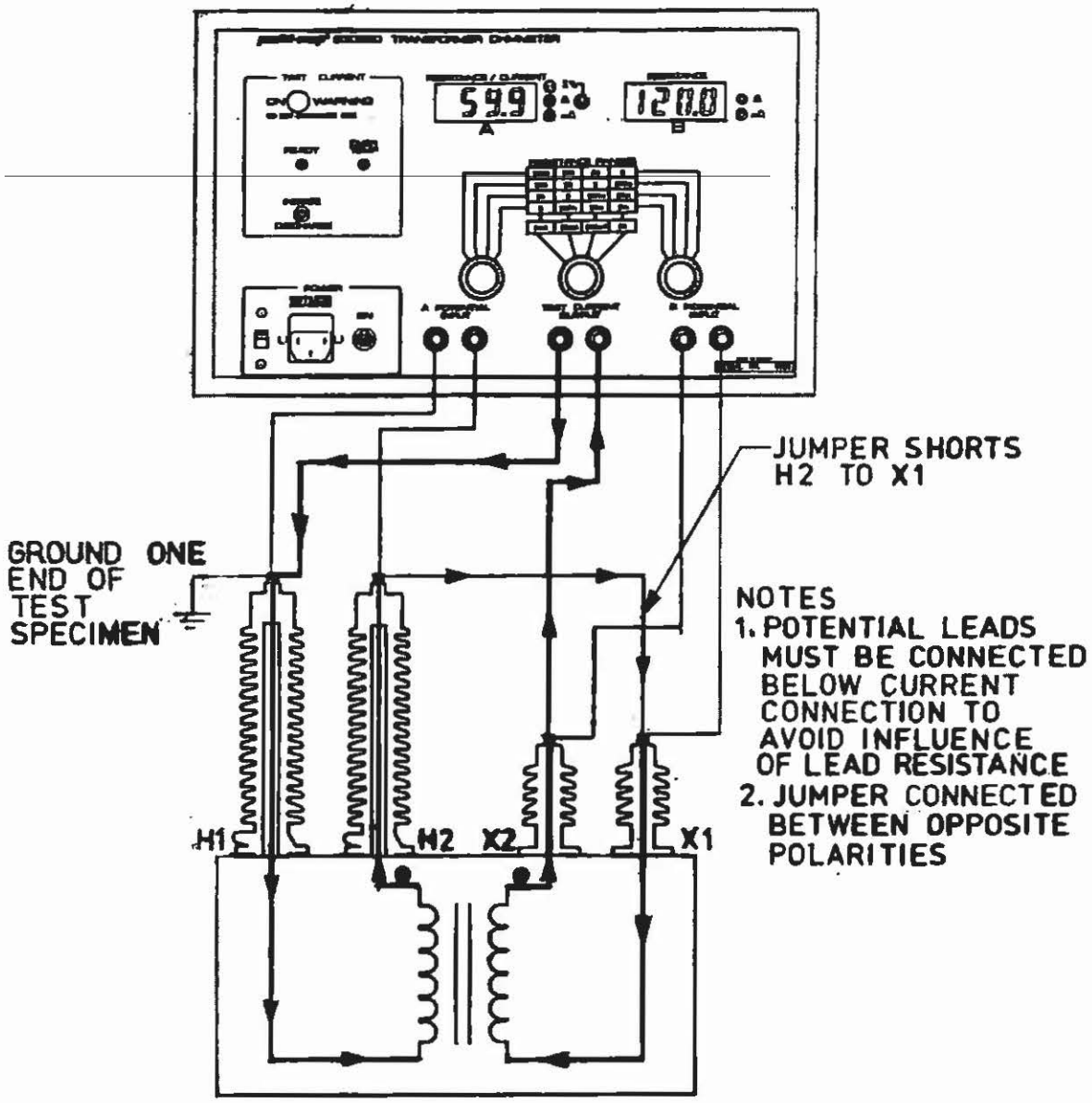

FIGURE 3: DUAL WINDING TEST

3.5 PROCEDURE FOR THREE PHASE TRANSFORMER TESTING

The following section details connections to be made on three phase transformers. These connections detail the different methods to be used in order to obtain the best results. The measurements taken will be for one winding at a time. The following connection diagrams (Figures 4 to 7), therefore, are to be used in conjunction with procedure "3.4.1 Single Winding Test". This procedure is to be used when performing three phase transformer testing. The only changes will be placement of leads.

PROCEDURE:

1. THREE PHASE WYE CONFIGURED WINDING WITH NEUTRAL

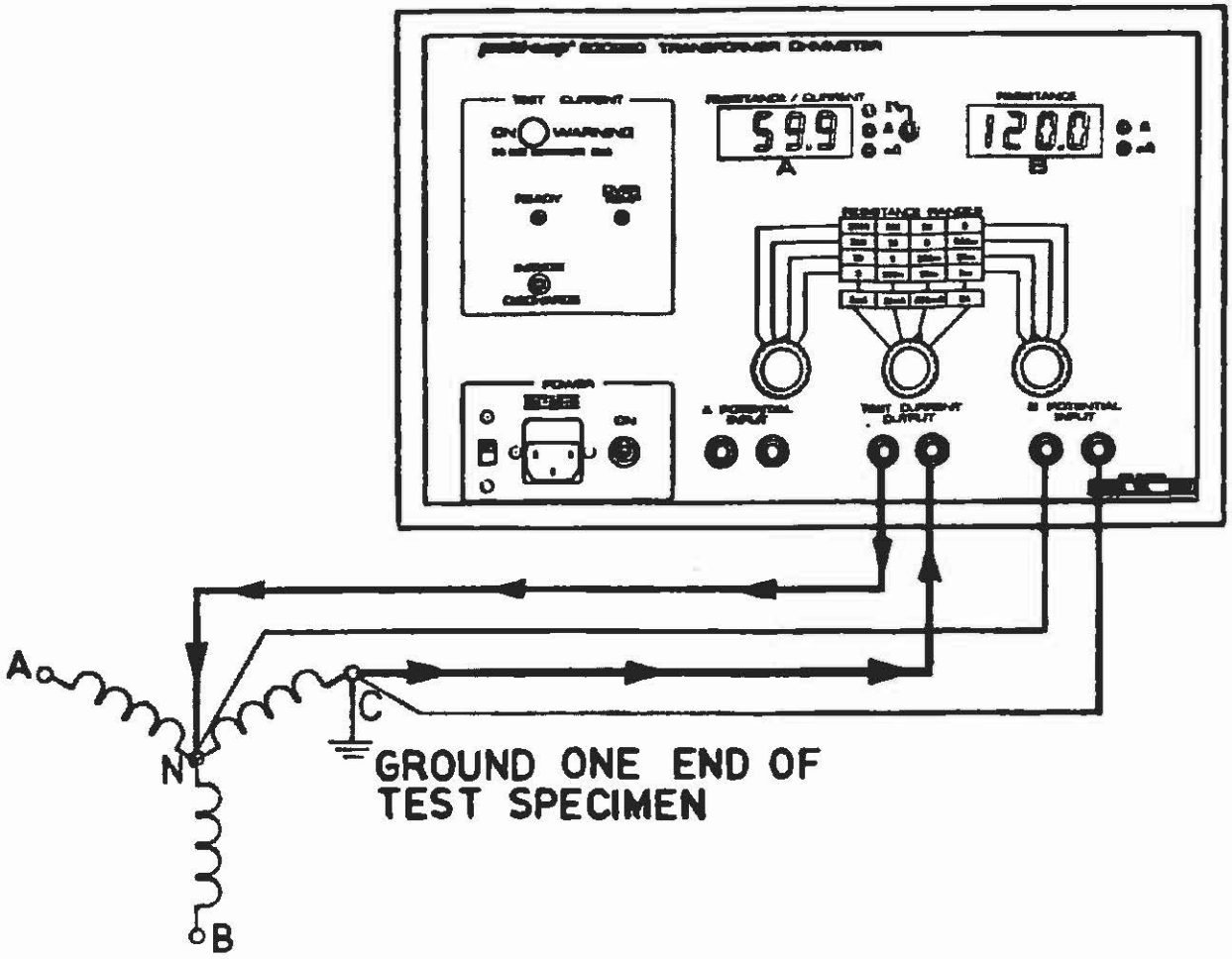

READING OBTAINED IS DIRECT, RESISTANCE OF C-N WINDING

FIGURE 4

2. THREE PHASE WYE CONFIGURED WINDING, NO NEUTRAL BROUGHT OUT

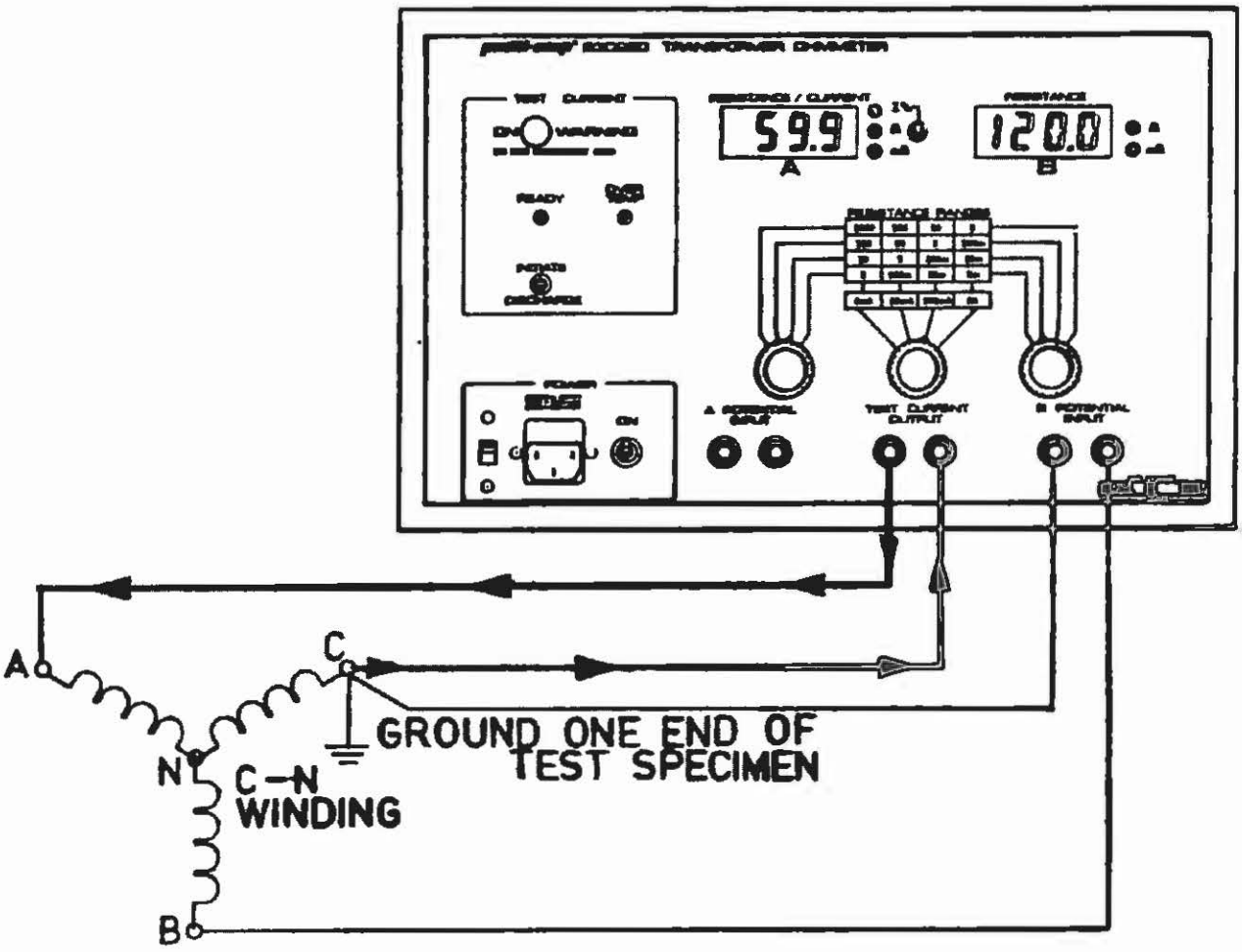

READING OBTAINED IS DIRECT, RESISTANCE OF C-N WINDING

FIGURE 5

3. THREE PHASE, DELTA CONFIGURED WINDING

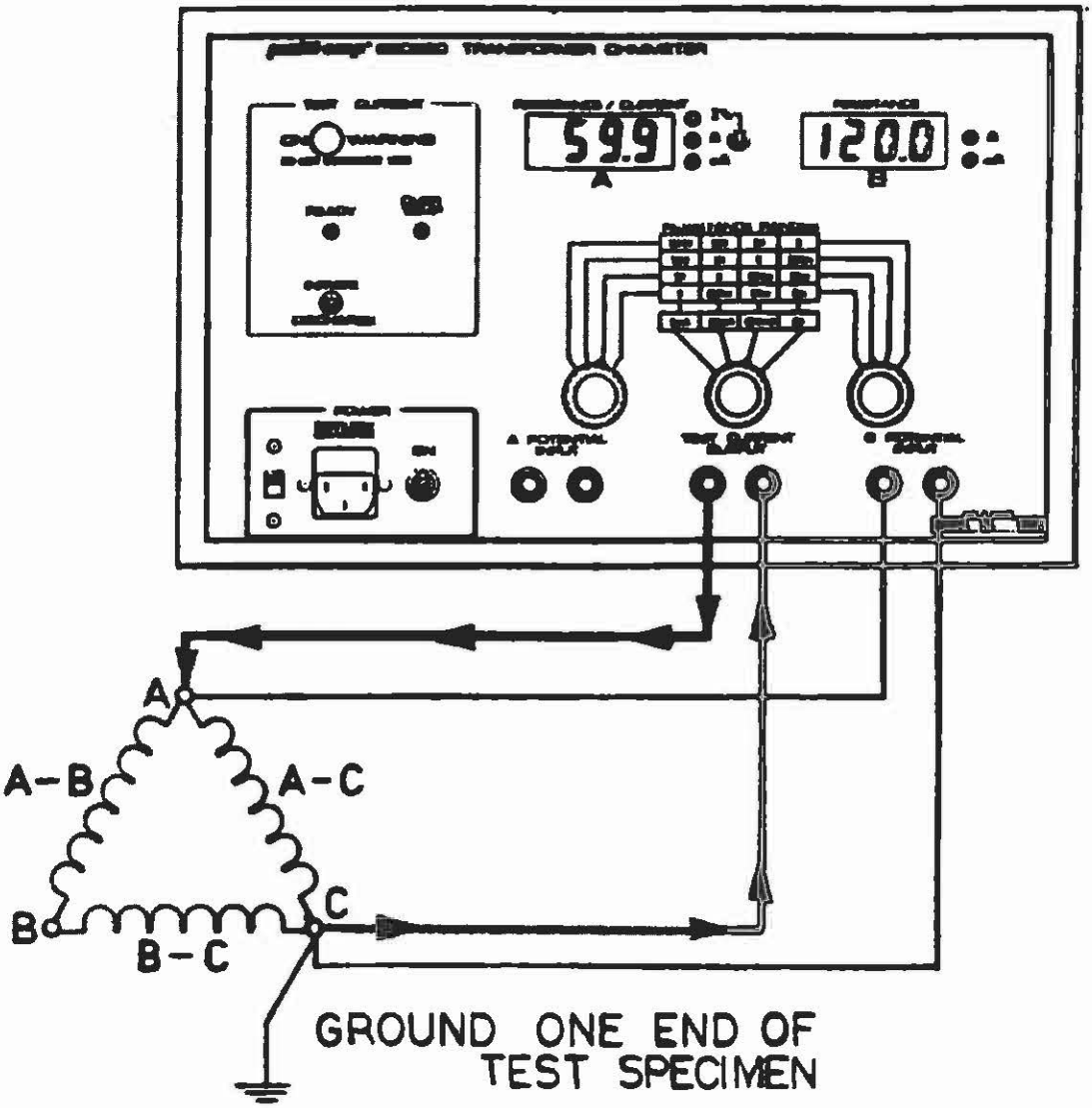

FIGURE 6

Assuming resistance of all three windings are equal.

Resistance of winding a-c = reading obtained x 1.5

Two other windings are parallel to winding to be measured (a-b + b-c)

To measure winding a-b, place current and potential leads to a phase and b phase bushings

Winding resistance a-b = reading obtained x 1.5

For absolute method, see section 3.5.1

3.5.1 TESTING DELTA-DELTA CONFIGURED WINDINGS

Although Delta-Delta transformers are not very common, they are present for various requirements. The testing of a Delta-Delta for winding resistance is usually a very time consuming procedure. This is because the two windings resemble two closed loop inductors. When energy is brought into the inductors, this energy (in the form of D.C. current) continually circulates within each winding. The correct balance time can take up to 30 minutes, which far exceeds the time restriction of many tests.

The method for testing this configuration quickly requires that both the high side and low side be connected in series with the Transformer Ohmmeter's current source (see Figure 7). By having the two windings in opposite polarity, the internal circulating currents settle very quickly to obtain a balance, and discharge with the same speed. Test time, for example, is reduced from 14 minutes to 30 seconds on a 300k VA Delta-Delta transformer. Even if only one side of the transformer needs to be tested, connecting both high and low windings in series will speed the test up considerably.

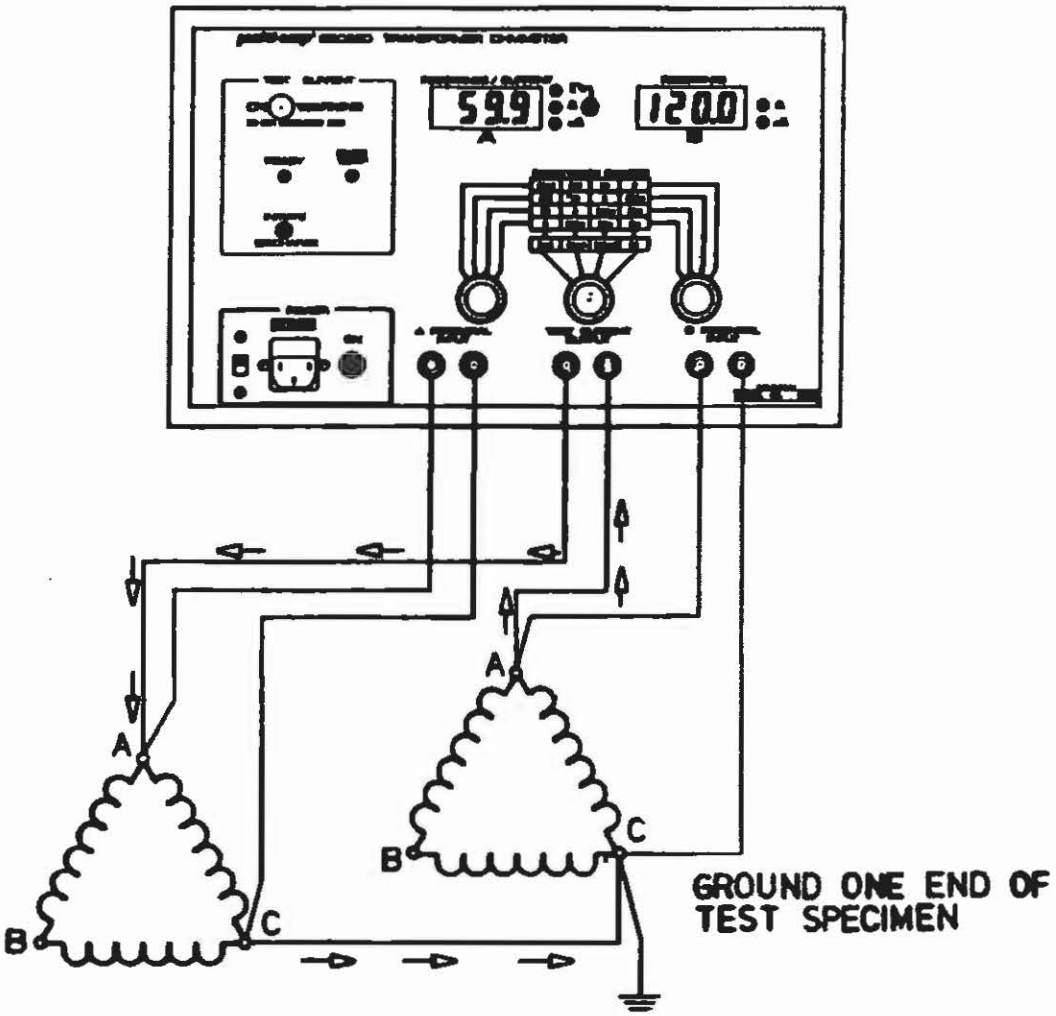

FIGURE 7

3.5.2 CALCULATION OF DELTA WINDING RESISTANCE

In the electrical power industry we find a lot of equipment that is connected in delta. An ordinary ohmmeter, when measuring a delta connected set of resistances, measures one resistance shunted by the other two series connected resistances. Calculating the value of the resistances is easy when they are equal, since the measured value can be multiplied by 1.5. When the resistances are not equal, one must solve three simultaneous equations in order to find the resistance values. This can be rather involved and time consuming.

The purpose of this technical note is to present a method of calculating the resistance values of a delta-connected network using the Megger 830280 Ohmmeter. The calculation is simple and can be easily done on a four function electronic calculator.

Measuring Procedure.

The complete measuring procedure involves two different connections for each of the three phases that are measured. The procedure gives three resistance values and six ratios that are used to calculate the individual, delta connected, resistors. The connections and readings to be taken are shown on the appended drawings.

The results of the measurement and calculations are entered in the table shown below to a network as defined thus:

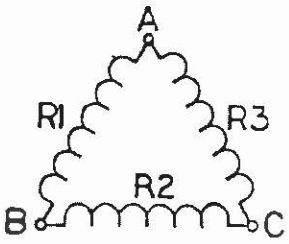

FIGURE 8- TYPICAL 3 PHASE DELTA NETWORK

Values of steps 1-9 are obtained by referring to the preceding pages.

Phase	Resistance	Ratio	Inverse Ratio
A - B	Step i	Step ii	Step iii
B - C	Step iv	Step v	Step vi
C - A	Step vii	Step viii	Step ix

The values of the resistances are calculated from the following equations:

Equation 1 $$R1 = i \times \frac{1 + v + ix}{v + ix}$$

Equation 2 $$R2 = iv \times \frac{1 + viii + iii}{viii + iii}$$

Equation 3 $$R3 = vii \times \frac{1 + ii + vi}{ii + vii}$$

The lower case roman numeral values refer to the numerical values obtained in the appropriate step of the measuring procedures (see table on previous page).

Example: Assuming a delta network as shown below,

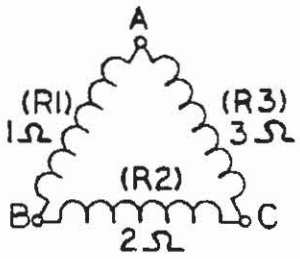

FIGURE 9

The results of the nine steps of the measurement procedure (follow on the preceding pages) should result in the following table:

Phase	Resistance	Ratio	Inverse Ratio
A - B	(i) 0.833	(ii) 0.666	(iii) 1.500
B - C	(iv) 1.333	(v) 3.000	(vi) 0.333
C - A	(vii) 1.500	(viii) 0.500	(ix) 2.000

Using equations 1, 2 and 3 from above, we arrive at the following values:

R1 = 1 ohm; R2 = 2 ohms; R3 = 3 ohms.

Conclusion

A procedure that allows the individual resistance values of delta-connected equipment to be easily calculated has been presented. Although the method, with certain modifications, is applicable to most ohmmeters, it is especially applicable when using the Megger 830280 Transformer Ohmmeter for testing delta connected transformers.

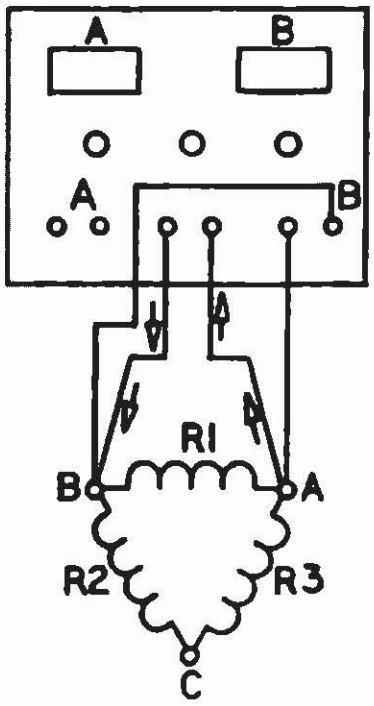

FIGURE 10

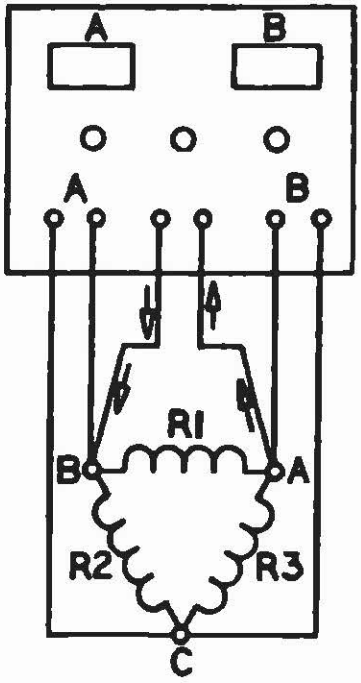

FIGURE 11

Step i

1. Connect transformer as shown.
2. Following test procedures of instruction manual, record R A-B on meter "B".

Step i = R A-B

Step ii

1. Connect transformer as shown.
2. Following test procedures of instruction manual, record:
   a. Meter "A";
   b. b. Meter "B".

Step ii = $\frac{\text{Meter "A"}}{\text{Meter "B"}}$

Step iii

1. Using procedure of Step ii,

Step ii = $\frac{\text{Meter "B"}}{\text{Meter "A"}}$

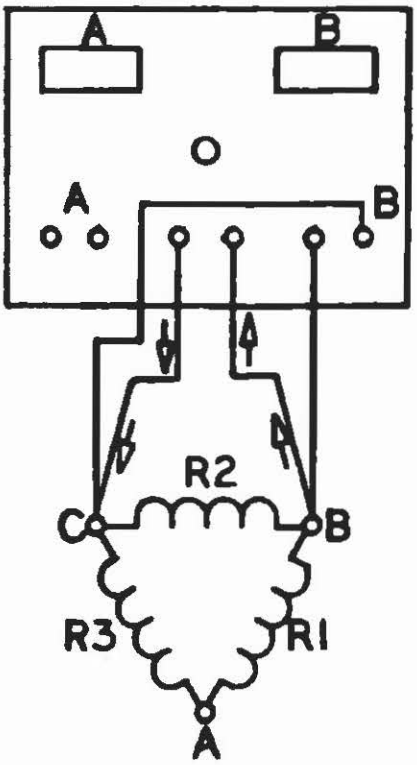

FIGURE 12

Step iv

1. Connect transformer as shown.
2. Following test procedures of instruction manual, record R B-C on meter "C".

Step iv = R B-C

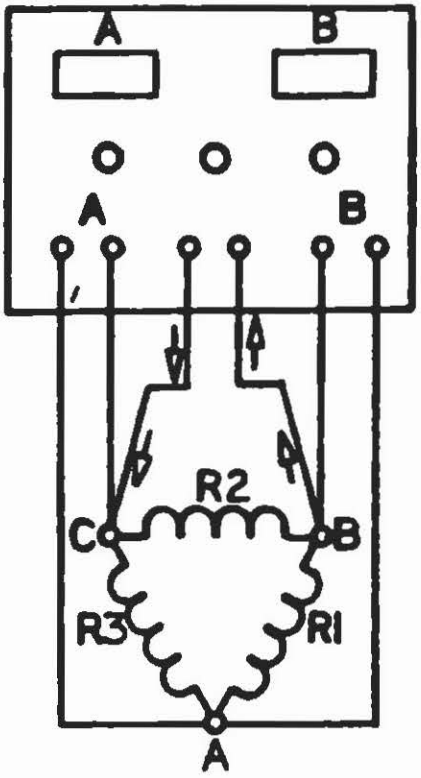

FIGURE 13

Step v

1. Connect transformer as shown.
2. Following test procedures of instruction manual, record:

a. Meter "A"

b. Meter "B".

Step v = $\frac{\text{Meter "A"}}{\text{Meter "B"}}$

Step vi

1. Using procedure of Step v,

Step vi = $\frac{\text{Meter "B"}}{\text{Meter "A"}}$

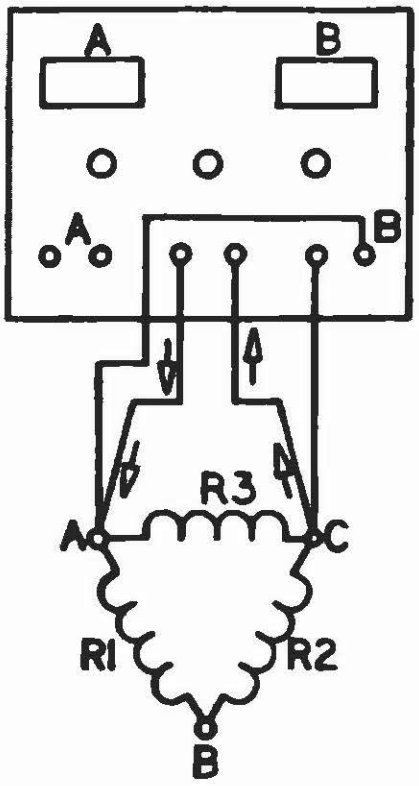

FIGURE 14

Step vii

1. Connect transformer as shown.
2. Following test procedures of instruction manual, record R A-C on meter "B".

Step vii = R A-C

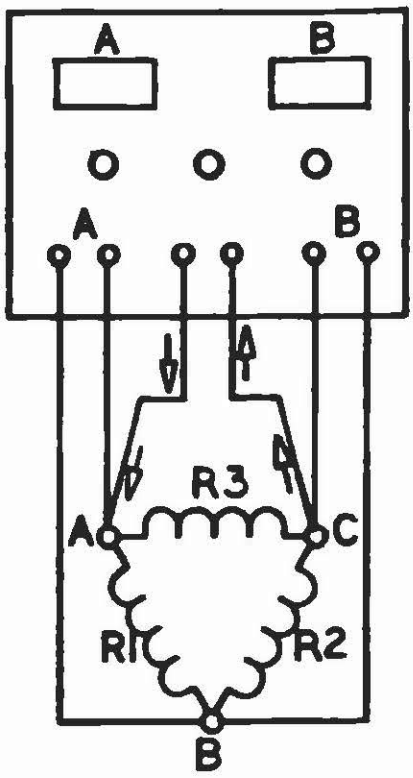

FIGURE 15

Step viii

1. Connect transformer as shown.
2. Following test procedures of instruction manual, record:
   a. Meter "A";
   b. b. Meter "B".

Step viii = $\frac{\text{Meter "A"}}{\text{Meter "B"}}$

Step ix

Using procedure of Step viii,

Step ix = $\frac{\text{Meter "B"}}{\text{Meter "A"}}$

3.6 TESTING TRANSFORMERS WITH TAP CHANGERS

Many transformers used today have taps built into them. These taps allow ratio to be increased or decreased by fractions of a percent. Any of the ratio changes involve a mechanical movement of a contact from one position to another. It is this contact that need to be checked by way of its resistance.

The contact may go bad for a number of reasons.

1. Misaligned when manufactured causing insufficient surface contact. Full load current overheats contact surface causing it to burn.

2. Current passing through contact exceeds full load rating.

3. Tap changing operation not "Make before break" creating internal arcing of contact surface.

4. An off-load tap changer is switched while on load. Contact surface becomes pitted and uneven.

Tap changers are divided into two types; On-load and Off-load. The "On-load" tap changer allows selection of ratio change while the transformer is in service. This would mean the ratio of a transformer can be changed while power (current) is still passing through it. The most common example of this type of "On-load" tap changer is a "Voltage Regulator".

The Transformer Ohmmeter is ideally suited to test on-load tap changers because the instrument can be left ON while changing from tap to tap. This allows the operator to take measurements very quickly without discharging, then re-charging the transformer for every tap. The Transformer Ohmmeter will re-balance after every tap change. If the tap is defective (open) or if there is even a fraction of time (1 m.s.) where circuit is open, the Transformer Ohmmeter will automatically go into its discharge cycle. This gives the operator a clear indication of a possible fault within the tap changer. For this OPEN condition, no damage will be done to the transformer by the Transformer Ohmmeter's D.C. current.

The second type of tap changer is the "Off-load". This is not as common as On-load because in order to change taps, the transformer has to be taken out of service or at least disconnected from the load. This type of tap changer may typically go bad faster than an On-load because of inadvertent changing of taps while still in service. The Transformer Ohmmeter will test this transformer, but it must be discharged between tap changes. If the Transformer Ohmmeter is not discharged of test current between tap changes, the instrument will automatically discharge upon sensing a break in the current path. Because of its low 5A, 30V D.C. current, no real damage will be done to the tap surface contact by the Transformer Ohmmeter when switching of tap changer occurs.

When actually testing tap changers, follow procedure of the transformer under test while keeping this section in mind.

3.7 TESTING VOLTAGE REGULATORS

This procedure describes the basic connections to a single phase regulator. The main test for a regulator is the evaluation of the condition of the tap positions. Because there are a large number of taps (typical 32), this test would normally take a very long time. With the Megger Transformer Ohmmeter, this test time is drastically reduced because the instrument will stay on while changing tap positions. This means charge and discharge cycles are virtually eliminated.

All regulators have internal bridging reactors. It is because of these reactors that balance time for the Transformer Ohmmeter will vary. On odd position taps, balance time will be longer than even positions. This is due to circulating current generated when on odd positions and is shown below:

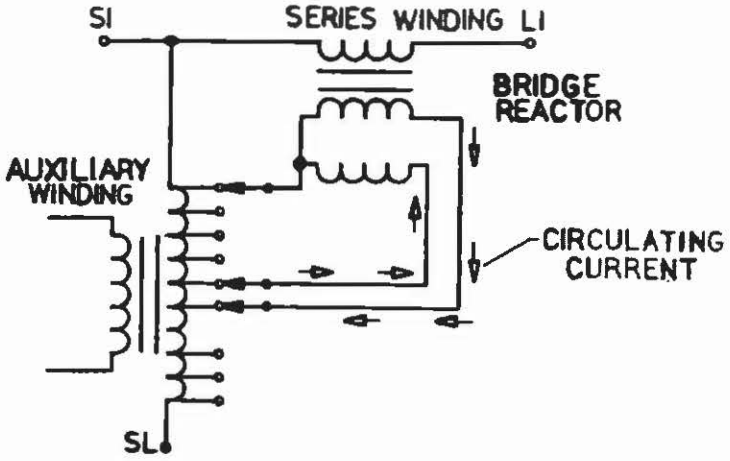

FIGURE 16: ODD POSITION TAP

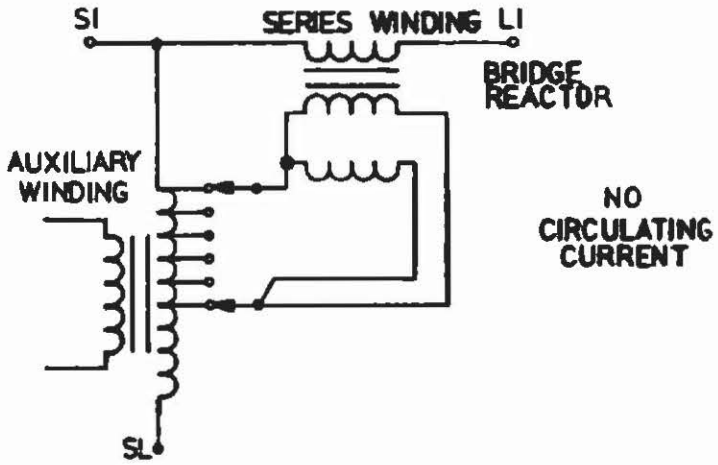

FIGURE 17: EVEN POSITION TAP

See Figure 18 for connection to the voltage regulator.

PROCEDURE

1. Connect line cord to unit and plug into 120V socket.
2. Set the following conditions:
   a. Display Selector (14): up position.
   b. Range Selector "A" (12): left most position.
   c. Range Selector "B" (13): right most position.
   d. Current Selector (11): 5A nominal (guide by resistance table on face plate).
3. Connect current output (9) to test specimen winding.
4. Connect "B" potential input (10) to test specimen winding. Do not clip potential leads on to the current leads, since this will add contact resistance to the measurement. Potential leads should always be placed inside (between) current leads. See Figure 18.
5. Turn power switch (1) "ON". "READY" L.E.D. (5) should illuminate.
6. Push current control switch (4) up to initiate current flow. Release when current indicator (7) comes ON.
7. Display "A" (15) indicates current output (in %). As output current approaches steady value, display "B" (16) comes on and indicates resistance of specimen.
8. The range switch "B" (11) may require re-setting to a more suitable resistance range.
9. When measurement is complete, push the current control switch (4) down to terminate measurement and discharge current. Discharge is complete when current indicator (7) is off (black).

CAUTION

Current selector (11) should be at highest acceptable current in order to obtain best results.

WARNING

DO NOT DISCONNECT LEADS BEFORE INDICATOR (7) IS OFF (BLACK)!!!

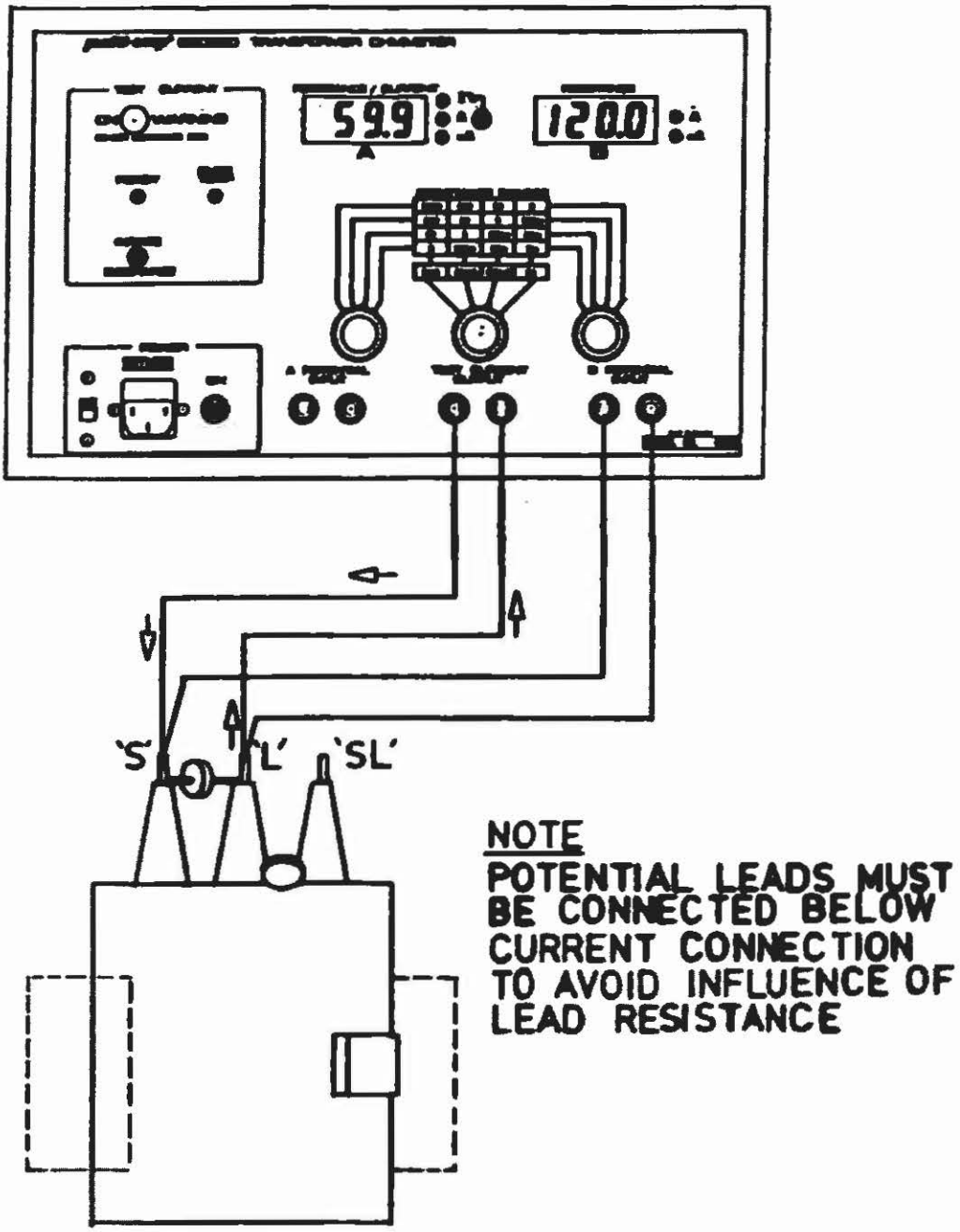

FIGURE 18: CONNECTION TO A REGULATOR

Megger.

4. SERVICE AND MAINTENANCE

4.1 DESCRIPTION

Megger maintains a complete instrument repair service. Should this instrument ever require repairs, we recommend it be returned to the factory for repair by our instrument specialists.

When contacting our service department, complete information concerning the trouble and any steps taken in attempting repair should be given. The catalog number and serial number of the instrument should also be specified. When returning instruments for repairs, either in or out of warranty, they should be shipped Prepaid and Insured, and marked for the attention of the Repair Department.

Megger.

Valley Forge Corporate Center
2621 Van Buren Avenue
Norristown, PA 19403 U.S.A.

610-676-8500
www.megger.com

Megger.

Digital Low Resistance Ohmmeter

DUCTER® DLRO®-10 & DLRO®-10X

User Guide
Guide de l'utilisateur
Bedienungsanleitung
Guida per l'Utente
Guia del Usuario

MEGGER®

SAFETY WARNINGS

- **These safety warnings must be read and understood before the instrument is used.**

- **Whenever possible, circuits should be de-energised before testing.**

  If it is impossible to de-energise the circuit, (e.g. high voltage batteries cannot be switched off while their connections are tested) the user must be aware of the dangers. The instrument terminals will become live when connected to the circuit. It is therefore recommended that a suitably insulated and rated lead set be used to provide insulation at the terminals.

- **Testing inductive circuits can be hazardous:**
  After testing an inductive load there will be an amount of energy stored in the inductance. This energy is released in the form of a discharge current. Disconnecting an inductive load while current is still flowing will cause a high voltage arc, which is a danger to both the user and the item under test.

  Although the DLRO10 and DLRO10X are not designed as transfromer ohmmeters the DLRO10 is fitted with a **DISCHARGE** lamp, marked 'I', which indicates that current is flowing in the C1-C2 loop. This lamp will flash at end of a test on an inductive load while a discharge current is still flowing and will stop flashing when the current has decayed to less than 1mA. DLRO 10X uses a message on the display to achieve this.
  For testing large inductive resistances the current carrying leads should be connected securely to the item under test before starting the test.

  It is not recommended that duplex handspikes be used to carry out tests on inductive loads. If inadvertently using the DH4 handspikes on an inductive load, the L1 lamp on the handspikes will flash amber while discharge current flows, thereby duplicating the function of the 'I'lamp on the instrument. It is important to maintain contact until the L1 light stops flashing amber and turns green indicating the end of the test.

- **This product is not intrinsically safe. Do not use in an explosive atmosphere.**
- **Please note. The neck strap is specifically designed to break if subjected to a strain of approximately 50 kg.**

Contents

Safety Warnings	2
General Description	4
General Operation - DLRO 10	5
Test Current Indicators	5
Noise Lamp	5
'C' & 'P' Indicators	5
'V' & 'I' Warning Indicators	5
General Operation - DLRO 10X	6
DLRO 10X Top Panel	6
DLRO 10X Main Menu Screen	6
Warning Messages	6
Noise	6
'C' & 'P' Indicators	6
External Voltage Warning	7
Discharge Current Warning	7
The Menuing System	7
Test Menu	7
Options Menu	7
Retrieve	8
Display	8
Download	8
Passbands	9
Set Clock	9
Delete Data	9
Storage	10
Range Menu	10
Entering Notes In The Memo Screen	10
Test Result Storage	10
Keypad Operation	11
Test Modes	12
Normal Mode	12
Automatic Mode	12
Continuous Mode	12
High Power Mode	12
Unidirectional Mode	13
Test Techniques & Applications	14
Testing Using DH4 Duplex Handspikes	14
Testing Using Handspikes Or Individual Leads.	14
Test Sequence	15
Test Lead Resistance	15
Overheating	15
Battery Module And Care	16
The Battery Module	16
Battery Charging	16
The Battery State Indicator	17
Standard Charging.	17
Slow Charging.	17
Standard Charging But At A Slow Rate.	17
There Is A Temperature Problem.	17
Input Voltage Too Low.	17
Battery Nearly Exhausted	17
Error: Reset	18
Overvoltage Problem	19-20
Specifications	21
Troubleshooting	22
Repair and Warranty	23

Symbols used on the instrument

Caution: Refer to accompanying notes

Equipment protected throughout by Double or reinforced Insulation (Class II)

Equipment complies with current EU Directives

General Description

The DUCTER DLRO 10 and DUCTER DLRO 10X make up a family of low resistance ohmmeters that measure resistances in the range from 0.1 μΩ to 2 kΩ. Both instruments provide a maximum test current of 10 Amps d.c. which is automatically selected according to the value of resistance being tested. The DLRO10X allows you to override this automatic selection and select your own test current.

The measured value of resistance is output to the instrument display with indication of the units, μΩ, mΩ or Ω. The DLRO 10 uses a large LED display and indicators to display the value and units respectively, while the DLRO 10X contains all the information on a clear backlit LCD display.

The use of a four terminal measurement technique removes the test lead resistance from the measured value and auto current reversal eliminates the effect of standing voltages across the test sample. Additionally, before and during a test, test lead contact is monitored to further reduce the chance of erroneous readings.

A resistance measurement takes approximately 2.5 seconds and comprises a measurement with forward current, reverse current and a display of the average. On the DLRO 10X all three values are displayed, and optionally, the measurement may be limited to forward current only.

The instrument is powered by a rechargeable Nickel Metal Hydride (NiMH) battery, which permits one thousand 10 Amp tests to be completed on a single charge. The battery module contains intelligent circuitry, which prevents damage to the battery from overcharging, and a battery state indicator. A removable lid that is hinged at the back and held closed by magnetic catches covers the top panel. This lid may be removed if required by opening fully and snapping out of its hinges.

Both instruments are protected against accidental connection to external voltages up to 600 V d.c. applied between any pair of the four terminals for up to 10 seconds. Please note that applying 600 V to the potential terminals will cause some internal heating. Expect errors of up to 30 digits immediately after the application of such voltage. Full accuracy will be restored within two to three minutes
Both instruments are supplied complete with a pair of DH4 Duplex Handspikes with 1.2 m leads. Other lengths and terminations are available if required.

General Operation - DLRO 10

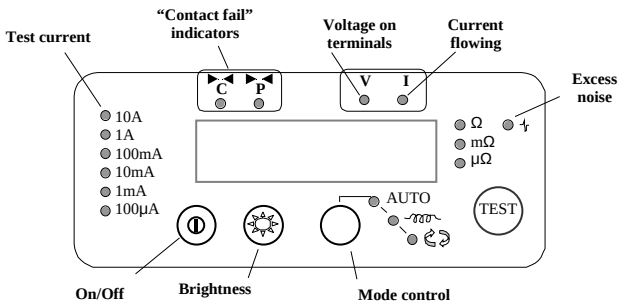

Press the On/Off switch to turn DLRO 10 on. All lamps will light, V and I lamps will flash, the software version will be displayed and the Ω lamp will light. If the test leads have not been connected to the test sample the 'C' and 'P' lamps will also light. Press the On/Off button again to turn the instrument off. If the instrument is not used for 5 minutes it will be turned off automatically.

Adjust the brightness control to a comfortable level.

Select the Test mode by pressing the Mode button repeatedly. The indicator lamps will cycle through the various Test modes in turn (see the section on Test modes). Press the Test button to start a test.

Test Current Indicators

The test current is selected automatically by DLRO 10 and is indicated by the lamps on the left of the panel. The measured value is displayed in the main window and the units (µΩ, mΩ or Ω) are shown by the lamps to the right of the window.

Noise Lamp

Noise in excess of 100 mV 50/60 Hz will light the 'Noise' lamp and measurement accuracy cannot be relied upon.

'C' & 'P' Indicators

The 'C' lamp illuminates to indicate contact failure in the 'C1-C2' loop. The 'P' lamp illuminates when there is a break in the P1-P2 loop.

'V' & 'I' Warning Indicators

If external voltage is applied to the terminals the 'V' lamp will flash. This is a warning that the item under test is live and might be dangerous. A test cannot be performed in this condition.

The 'V' lamp will light if more than 50 V. is applied between either voltage terminal and a current terminal. If the voltage appears between just the voltage terminals or just the current terminals the lamp will light at 100 V peak or 5 V peak respectively.

Please note - The 'V' lamp will only indicate if a voltage appears between terminals. The lamp will not operate if all terminals are at the same high voltage. The lamp will not operate if the instrument is turned off.

The 'I' lamp will light if a current greater than 1 mA is still flowing after a test is completed. This suggests that an inductive load has been tested and is still discharging. Do not disconnect the current loop until the 'I' lamp has gone out.

General Operation - DLRO 10X

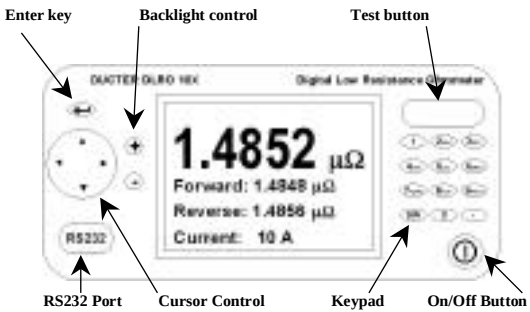

DLRO 10X Top Panel

All the controls needed to set up and operate DLRO 10X are located on the top panel of the instrument.

To the left of the large LCD display are the controls for moving around the display, controlling the menuing system and adjusting the display contrast and backlight.

To the right of the display is the large Test button, Power On/Off button and an alphanumeric keypad for entering notes relating to a test which will be stored with the test results for later reference.

To turn your DLRO 10X on, press the On/Off button for approximately 1 second. Press again to turn the instrument off. If the instrument is not used for 5 minutes it will be turned off automatically.

DLRO 10X Main Menu Screen

When first switched on DLRO 10X displays a copyright screen, followed by the Main Menu screen.

This screen provides you with information such as percentage of battery charge remaining, index number of the next test, number of tests already stored and the current date and time.

This screen also provides access to the menuing system, through which you set up your instrument and choose the desired test parameters. Navigation of this menuing system is by means of the cursor control and Enter key.

```
TEST      OPTIONS     RANGE
NORM                   10A



              70%
         NEXT TEST 1
         0    STORED

        27/07/00 12.02
```

Warning Messages

The Main Menu screen will from time to time also contain certain warning messages

Noise

Noise in excess of 100 mV 50/60 Hz will activate the message 'Noise' at the bottom of the display. Above this level accuracy cannot be relied upon.

'C' & 'P' Indicators

A good measurement requires both the current carrying circuit and the voltage detection circuit to be completed by the item

General Operation - DLRO 10X

under test. DLRO 10X checks for this continuity. If there is poor continuity in either circuit a message will appear at the bottom of the display. This will read "P OPEN CIRCUIT" if the voltage contacts are high resistance, "C OPEN CIRCUIT" if the current circuit is not made or "CP OPEN CIRCUIT" if both circuits are inadequate. Check the contacts, since a measurement cannot be made if any of these messages is visible on the display.

External Voltage Warning

If external voltage is applied to the terminals a message "EXT VOLTS" will flash on the display. This is a warning that the item under test is live and might be dangerous. A test cannot be performed in this condition.

The "EXT VOLTS" message will flash if more than 50 V. is applied between either voltage terminal and a current terminal. If the voltage appears between just the voltage terminals or just the current terminals the message will appear at 100 V peak or 5 V peak respectively.

Please note - The message will only appear if a voltage appears BETWEEN terminals. The message will not appear if all terminals are at the same high voltage. The message will not operate if the instrument is turned off.

Discharge Current Warning

A message CURRENT FLOW will appear if a current greater than 1 mAis still flowing after a test is completed. This suggests that an inductive load has been tested and is still discharging. Do not disconnect the current loop while the discharge warning is showing.

The Menuing System

Use the Left and Right arrows of the cursor control to highlight the menu required. Press the Down cursor control to see the options available on that menu. Select the required option using the cursor control and press Enter to set that option. Depending on the menu item selected the display will either present further options or will return to the main menu screen.

Test Menu

This sub-menu selects the test mode. Only one mode can be active at a time and the active mode is displayed below the heading TEST. (See Test Modes later in this manual for details of each mode.)

Options Menu

The Options menu has five options that are not related to each other, as shown on next page

General Operation - DLRO 10X

Retrieve

allows the recall of stored results to the display or a PC.

Display

recalls each test, in sequence, to the instrument display

```
          TEST NUMBER 2
         DD MM YY HH MM
         09/10/00 12:24
TEST NORMAL
AVERAGE        12.6 µΩ
FORWARD        14.0 µΩ
REVERSE        11.2 µΩ
CURRENT        10 A

RESULTS                MEMO
```

starting with the latest stored result.

Use the cursor control Up and Down controls to step later or earlier respectively through the stored results. Alternatively, if you know the index number of the test you wish to display, type the number on the keypad and press Enter.

An asterisk (*) next to the word "MEMO" means that there are notes attached to this result. Press the right cursor control to view the notes.

Download

causes the entire contents of the data store to be output to the RS232 port to the left of the display. A copy of AVO Download Manager, which facilitates downloading and formats the data, is supplied.

Downloading data does not cause the stored data to be erased from memory. To clear data from memory see "Delete Data" below.

Please note - DLRO 10X also makes data available via the RS232 Port in real time and is suitable for printing on a self-powered serial printer.

The output has the following form:
TEST NUMBER
TEST TYPE
DD MM YY HH MM
01/01/00 00:33
FORWARD RESISTANCE
REVERSE RESISTANCE
AVERAGE RESISTANCE
SELECTED CURRENT
UPPER LIMIT
LOWER LIMIT
PASS/FAIL

The last three lines will only appear if passbands have been set

General Operation - DLRO 10X

Passbands

This option allows you to set upper and lower limits between which the test result average must fall if it is to be signalled as a Pass (a long tone from the buzzer). Readings outside these limits will be signalled as a Fail (a short tone from the buzzer).

Values are entered via the keypad complete with decimal points, where applicable, and including µ or m (See section on the Alphanumeric Keypad). It is not necessary to enter the Ω symbol. The upper limit must be less than or equal to 2000.0 Ω and the lower limit must be less than the upper limit.

After completing the upper limit press Enter. DLRO 10X will check that valid numbers have been entered and will move to the lower limit. Complete this limit and press Enter. DLRO 10X will check that valid numbers have been entered and will display the option to ENABLE or DISABLE the passbands.

Highlight your choice and press Enter. You will return to the Main Menu screen.

Note: Passbands will remain enabled or disabled until you enter this screen and change the selection. If all that is required is to change Passbands from ENABLED to DISABLE or vice versa, enter the PASSBAND screen and press Enter until the ENABLED / DISABLED choice is shown at which time you may change the selection.

Set Clock

This option sets the real time clock date and time settings as well as setting the date format. When you enter this screen the current date, time and date format will be displayed.

Use the cursor control Up and Down arrows to adjust the highlighted data. Step to the next item by using the Right cursor control arrow.

The row below DD MM YY HH MM contains respectively the date, the month, the two-digit year, the hour of the day in 24-hour notation and the minute. These must be entered in this sequence regardless of the date format you wish to use.

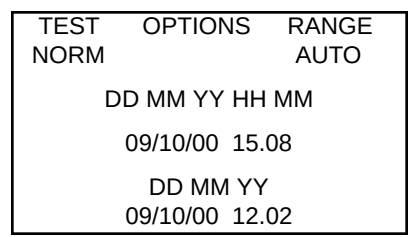

The lower DD/MM/YY shows the current date format. Pressing the cursor control Up arrow will cycle through the available options DD/MM/YY, MM/DD/YY or YY/MM/DD.

The bottom line shows the current setting of date and time. This is updated when you press Enter to exit the Set Clock function. However, tests already stored prior to changing the date format will retain the old format.

Delete Data

Select **Delete Data** if you wish to clear DLRO 10X's memory of stored data. In case you have selected this Option by accident you will be asked to confirm that you wish to delete the data; the default is NO. Change this to YES and press Enter if you wish to delete all data.

Please note - ALL stored data will be deleted.

General Operation DLRO 10X

Storage

The **Storage** option sets the default for data storage. It may be set to always store data or never to store data. Highlight the desired option at the bottom of the screen and press Enter.

With the exception of tests carried out in Continuous mode, at the end of each test you have the option to change the default by selecting STORE or NO STORE at the bottom of the results screen.

At the end of a test, if memory is full this STORE / NO STORE message will change to MEMORY FULL and no more tests will be stored.

Data is stored indefinitely if a charged battery pack is fitted. If the main battery becomes exhausted or is removed, data is maintained for a period of 4 days by an internal backup battery. When a charged battery pack is refitted, the backup battery will recharge to full capacity within 1 week.

Range Menu

DLRO 10X uses a test current between 100 µA and 10 A to measure the resistance of the item under test. If set to **AUTO**, DLRO 10X will select the current according to the resistance it detects. (see Specifications, Ranges)

However, in some cases it may be desirable set a maximum test current. If this is so, move the cursor to the desired current and press Enter.

Six test currents are available; **10 A, 1 A, 100 mA, 10 mA, 1 mA** and **100 µA**. Selecting the 10 A maximum will have the same effect as selecting AUTO.

The Main Menu screen will show the active current range beneath the RANGE heading.

ENTERING NOTES IN THE MEMO SCREEN

At the end of each test, (*with the exception of a test in Continuous mode*), you can select the **STORE** or **NO STORE** option to store the test results or not. Select the desired option using the cursor control. This overrides the default setting under Options, Storage for one test only.

If you wish to add comments to the test results, instead of pressing Enter, briefly press one of the twelve keys on the keypad. You will enter a memo screen that allows you to enter up to 200 characters of alphanumeric information concerning the test. When you have entered all information press Enter and the measurement and memo will be stored regardless of whether STORE or NO STORE was selected.

If you do not wish to add notes and are happy to accept the default STORE / NO STORE setting you may press the Test button and a new test will be started.

TEST RESULT STORAGE

Each test is numbered, starting at test 1. This test number is incremented automatically, as each result is stored. The test result memory can store a maximum of 700 tests, each being identified by its test number, date and time.

It is advisable to retrieve all data to a PC and then to delete all data before the test number reaches this maximum. Deleting the data will reset the test number to 1. This will save loss of data.

General Operation DLRO 10X

KEYPAD OPERATION

The 12 key keypad is similar to those used on mobile telephones in that each key is capable of producing one of several characters depending on the number of times the key is pressed.

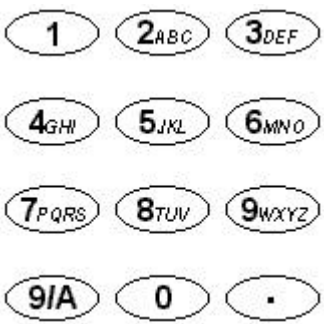

The keypad is used to enter data into the Memo field.

Pressing the blue key marked 9/A changes the function of the keyboard between alpha and numeric modes.

In alpha mode a full height flashing vertical bar (|) indicates the cursor. The keys 2 to 9 will produce the letter shown on the keys depending on the number of presses. For example if the 2 key is pressed once an 'A' will appear, twice and a 'B' will appear etc.

The 0 key produces a space.

The 1 key is a destructive backspace.

In numeric mode a half height flashing bar (') indicates the cursor. The keys marked 1 - 9 and 0 produce that number when pressed. Press the respective key briefly to enter the desired number. Pausing will cause the cursor to move on to the next character. If a key is held down it will auto-repeat.

The key at the bottom right hand corner of the keypad marked with a dot is a special key that produces 20 special symbols. Each press will sequentially produce the character shown below:

.	Decimal point or full stop
Ω	Ohms symbol
m	lower case m (abbreviation for milli)
µ	Symbol for micro
#	Symbol known as hash or pound and commonly used as shorthand for "number"
%	Percent sign
(	Left round bracket
)	Right round bracket
-	Hyphen, dash or minus sign
/	Slash
:	Colon
@	"at" symbol;
√	Tick mark
!	Exclamation mark
?	Question mark
$	"Dollar" symbol
=	"Equals" sign
<	"Less than" symbol
>	"Greater than" symbol
*	Asterisk

Test Modes

TEST MODES

DLRO 10 has 4 test modes which are selected by repeated presses of the Mode button. At the end of each test, DLRO 10 will display the average of the values obtained with forward and reverse current.

DLRO 10X has 5 modes. On DLRO 10X these modes are selected from the TEST menu using the cursor control and Enter key. At the end of a test, DLRO 10X will show three resistance values; that obtained with forward current, that obtained with reverse current and the average value.

Normal mode

Normal mode makes a single measurement of the resistance of the sample using forward and reverse current

Please note that in this mode both the current and voltage leads must be connected across the test sample before the Test button is pressed. To make another measurement, ensure the test leads are connected and press the test button.

Automatic mode

If Automatic mode is selected, your instrument will remain in a state of readiness waiting for both the current AND voltage measuring leads to be connected to the test piece. When this is done, a forward and reverse current test will be started automatically.

To make another measurement simply break contact with the test sample and remake contact.

For example, if measuring joints in a long bus bar, you may leave the current circuit connected at opposite ends of the bus bar. Simply making contact with voltage probes across the joint(s) you wish to measure will then activate the measurement.

Continuous mode

Continuous mode requires the connections to be made before pressing the Test button. Your instrument will then repeat its forward and reverse measurements and display the results approximately every 3 seconds until contact is broken or the Test button is pressed.

Inductive mode

DLRO10 and DLRO10X are able to make d.c. resistive measurements on loads that exhibit an inductive component using the test mode indicated by the inductor symbol on the DLRO10, or by using the inductive mode on the DLRO10X.

When measuring inductive loads it is essential that the current carrying leads are securely clamped to the item being tested and that they are not removed before any stored charge has been discharged at the end of the test. Failure to comply with these instructions might result in an arc being produced, which might be dangerous for the instrument and the operator.

Having selected inductive mode, connect all four leads to the item being tested and press the Test button.

DLRO will check that all four leads are in adequate contact with the test piece and will then apply a test current and try to find the correct range. The display will show 1 - - followed by 1 - - - -. During this time you may see the current range increasing or

Test Modes

decreasing. On the DLRO10 the “I” lamp will flash and the message “Current Flowing” will appear on the DLRO10X display.

After a short time resistance readings will appear on the display, reducing gradually over aperiod of time until eventually a stable reading will be obtained.

The time required for a stable reading may vary from a few seconds up to several minutes depending on the inductance and resistance of the test sample. There is no time limit for the inductive mode test, which will continue until the operator presses the Test button.

When the test is terminated, the “I” lamp will remain illuminated on the DLRO10 or the message “Discharging” will appear on the DLRO10X display until any stored energy has discharged. When these messages are extinguished it should be safe to disconnect the “C” leads.

However, the discharge indicator is an active electronic device and should not be relied upon. You should observe your organisation’s operating procedures.

At the end of the test both instruments will display the measured resistance, the DLRO10 will flash the relevant current lamp while the DLRO10X will display the test current used on the display.

Please note:- In inductive mode the 10A test current will not be used.

Undirectional mode

On the DLRO 10X only, this mode makes the measurement as in automatic mode but using forward current only.

This mode speeds up measurments on samples that are known to be free of any standing voltages or thermal emfs. However the accuracy of the reading may be degraded by any thermal emfs but should not be worse than 0.2% ± 30 digits.

Since current is only applied in the forward direction, in this mode only a single resistance value will be displayed.

A test may be repeated by breaking contact and reapplying the test probes or by pressing the Test button.

Test Techniques & Applications

TESTING USING DH4 DUPLEX HANDSPIKES

Each handspike is marked with the letter P. This indicates the potential terminals. These should be the 'inside' contacts when making a measurement (as shown in the next section 'Testing Using Duplex Handspikes or Individual Leads').

One of the DH4 handspikes is fitted with two lamps marked L1 and L2 and an extra lead. This lead should be plugged into the 4 mm socket next to the main terminals on the right hand side of the instrument. These lamps provide information to the operator, which would otherwise only be available on the instrument display. The meaning of these lamps is described below.

For example, using the DH4 Duplex Handspikes with the DLRO 10 in AUTO test mode:

1. Press the TEST button on the instrument.
2. Lamp L1 will illuminate a continuous red to indicate contact failure. See the instrument panel for details if required.
3. When all four contacts connect, L1 will extinguish.
4. No lamps will show during the test unless contact fails.
5. Lamp L2 will light a continuous green when current flow has decayed to less that 1 mA to signal end of test.
6. Removing the probes will extinguish the green L2 (end of test) and Light the red L1 (no contact).

Since your DLRO always ensures good contact before applying the full test current, there will be no 'splash' to erode the contact tips. However, should the tips become worn or blunted, they can be simply replaced by pulling out the worn tips and inserting new ones.

DLRO 10 and DLRO 10X (no passbands)

Lamp L1	Lamp L2	Meaning
Red	Off	Inadequate contact at C and/or P contacts
Flashes Red	Off	Voltage present between contacts
Off	Green	Current less than 1 mA and test complete.
DLRO 10X ONLY if passbands set		
Off	Green	Measurement Pass
Off	Red	Measurement Fail

TESTING USING DUPLEX HANDSPIKES OR INDIVIDUAL LEADS.

Connect the four leads as shown.

If using Duplex Handspikes ensure that the probe marked P is inside the C probes.

Test Techniques & Applications

TEST SEQUENCE

Pressing the TEST button starts the test sequence.

Contact resistance is checked by passing 100 µA through the C1-C2 loop and checking that the voltage is less than 4 V. Then passing 80 mA through the P1-P2 loop and checking that the voltage is less than 250 mV. If either value is exceeded the respective lamp or warning message will be displayed.

When all faults have been rectified the test current is increased until the voltage on P1-P2 is within the 2 mV to 20 mV range. This current is then applied in a forward and then reverse direction to obtain two measurements.

Both measurements are displayed by DLRO 10X along with the average, while the DLRO 10 displays the average only.

If the combined resistance of the current leads and test sample is greater than 100 mΩ, testing at 10 A will not be possible. A 1.9 mΩ resistor will then be tested at the next lowest current (1 A) and the result will be shown as 1.900 mΩ instead of 1.9000 mΩ.

TEST LEAD RESISTANCE

For testing at 10 A, the combined resistance of the current leads must not exceed 100 mΩ. This will ensure that the voltage drop in the leads is less than 1 volt and will enable 10 A testing under worst case conditions. If you wish to limit test current to no more than 1 A, on DLRO 10 use current leads with a resistance of about 1 Ω, or on DLRO 10X select 1A as the maximum test current on the RANGE submenu.

OVERHEATING

When performing rapidly repeated tests at 10 A, using current leads with a combined resistance of 100 mΩ, 10 W of heat will be dissipated in the leads and 30 W within your instrument. If the ambient temperature is high this will cause internal overheating and the message "hot" will appear on the instrument display and testing will be halted.

After a few minutes to cool down, testing will be allowed to continue.

If this is a persistent problem, use current leads with a higher resistance (e.g. 200 mΩ to 300 mΩ). This will reduce the generation of internal heat.

Battery Module and Care

THE BATTERY MODULE

The battery module contains nickel-metal-hydride cells and has a built-in battery-management system that controls charging and monitors discharge. This provides a high capacity, low-weight battery system, which can be recharged at any time. It is not possible for the user to over-charge or over discharge the battery. For your own convenience it is best to charge it regularly to keep it topped up, but leaving it in a discharged state will do no harm.

On the front of the battery module are two buttons and a 10-segment LED display.

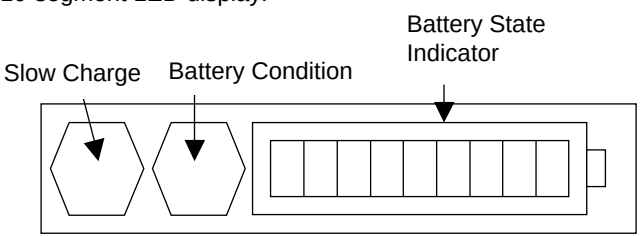

To find the amount of charge in your battery module, whether connected to your DLRO or separate, press the Battery Condition Button. The Battery State indicator will light between 1 and 10 segments signifying between 10% and 100% charge respectively. After a few seconds this display will automatically go out.

BATTERY CHARGING

Please note - The battery should only be charged within the temperature range 0°C to 45°C. Fast charging will not be allowed if the temperature is below 10°C. Fast charging causes the temperature of the battery to rise. If the temperature exceeds 45°C the charging rate will be reduced automatically.

To charge the battery, your battery module must be removed from the instrument. Remove the module by pressing on the raised circular area of the retaining clips and pull the top of the clip away from the instrument body. The module now unplugs from the base of the instrument.

Plug in the charger or connect to a 12 volt vehicle-type battery using the ‘cigar lighter’ lead provided. The LED "Battery State" indicator will light and show movement when the battery is charging. The battery may be recharged before it has been fully discharged. It will normally be recharged to 90% of capacity within $2^1/_2$ hours. Full charge may take up to 4 hours before indicating that the battery is full depending on the initial state of the battery. When charging is complete the battery management circuitry will switch off so that over-charging is prevented.

Your battery module can be safely used in a partially charged state and will not suffer if stored in a discharged state. However, you may wish to have a spare battery that can be interchanged with the one in use to provide continuous use of your DLRO.

As the battery ages, it may start to loose its capacity. In this case the battery module has a slow charge facility which is activated by pressing the Slow Charge button while switching on the charger supply until the indicator bars start to move. This method of charging can take up to 48 hours and so is best reserved for a weekend or a period when the instrument is not required to be used.

Battery Module and Care

A fully charged battery, even if not used, will self discharge over a period of several weeks (faster at higher temperatures). Always check the "Battery State" indicator before starting work. A fully charged battery will light all segments. A fully discharged battery will light no segments.

Please note that all batteries suffer a reduced life if exposed to constant high temperatures. A constant temperature of 30°C will probably cause the battery to fail in less than 5 years. 40°C will shorten its life to 2 years.

THE BATTERY STATE INDICATOR

The Battery State Indicator provides information on the amount of charge in the battery, but is also used to signal other conditions as follows:

Standard Charging.

The battery module is charging at its standard rate.

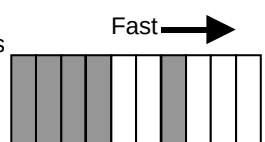

Slow Charging.

The battery module is charging at its slow rate.

Standard charging but at a slow rate.

The battery has been set to charge at its standard rate but, because the battery has become hot, it has switched charge rates to a lower rate while the battery cools down. Wait for the temperature to drop and/or move to a cooler location.

Not charging. There is a temperature problem.

The battery is too hot or too cold and charging has therefore been interrupted until the battery returns to a temperature between 0°C and 45°C (32°F and 113°F)

Input Voltage Too Low.

The charger supply is not supplying sufficient voltage to the battery module to charge the batteries.

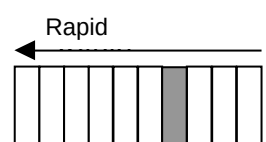

Battery nearly exhausted

The battery capacity is very low. Recharge it.

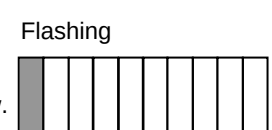

Battery Module and Care

Error: Reset

An error has occurred within the battery module. The circuitry is resetting. Wait a few moments and the fault should clear.

Flashing

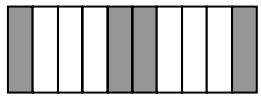

Overvoltage problem

The charging supply voltage is too high. Disconnect the charger and rectify the fault.

WARNING

Connecting to greater than 15 volts can cause permanent damage to the battery module.

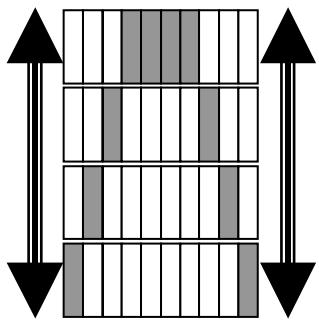

Specifications

Ranges

Full Scale	Resolution	Accuracy	Full Scale Volts		Test Current	
			Resistance	Induction	Resistance	Induction
1,9999 mΩ	0,1 µΩ	±0,2%±0,2 µΩ	20 mV		10 A	1 A
19,999 mΩ	1 µΩ	±0,2%±2 µΩ	20 mV	20 mV	1 A	1 A
199,99 mΩ	10 µΩ	±0,2%±20 µΩ	20 mV	200 mV	100 mA	1 A
1,9999 Ω	100 µΩ	±0,2%±0,2 mΩ	20 mV	200 mV	10 mA	100 mA
19,999 Ω	1 mΩ	±0,2%±2 mΩ	20 mV	200 mV	1 mA	10 mA
199,99 Ω	10 mΩ	±0,2%±20 mΩ	20 mV	200 mV	100 µA	1 mA
1999,9 Ω	100 mΩ	±0.2%±0.2 Ω	200 mV	200 mV	100 µA	100 µA

		DLRO10	DLRO10X
Display	Measurement	$4^1/_2$ digit seven segment LED	Large backlit LCD
	Range and Safety	LED Indication	
Measurement	Mode	Manual, Auto, Continuous, Inductive	Manual, Auto, Continuous, Inductive, Unidirectional.
	Control	Fully Automatic	Fully Automatic with manual override of maximum current
	Speed	<3s for forward & reverse current and to display average	
Test Method		Single cycle reversing d.c. ratiometric measurements and average result calculated.	
Test Current Accuracy		10%	
Output Current Stability		<10 ppm per second @ 10 mA <100 ppm per second at higher currents	

Specifications

		DLRO10	DLRO10X
Maximum Lead Resistance		100 mΩ total for 10Aoperation irrespective of battery condition.	
Voltmeter Input Impedance		> 200 kΩ	
Hum Rejection		Less than 1% ± 20 digits additional error with 100 mV peak 50/60 Hz. on the potential leads. Warning will show if hum or noise exceeds this level.	
Data	Transfer		Real Time or from storage via RS232
	Storage		700 tests
	Memo Field		Up to 200 characters per test via integral alphanumeric keypad.
Battery	Capacity	7 Ah NiMH rechargeable.	
	Life	Typically 1000 x 10 A tests before recharge	
	Recharge	Via External 90V - 260 V 50/60 Hz charger or from 12 to 15 V d.c. supply	
Charging Time		2.5 hours to 90% capacity, 4 hrs for full charge	
Temperature	Operation	+5°C to +45°C (41°F to 113°F) at full specification. -10°C to +50°C (14°F to 122°F) at reduced acuracy	
	Storage	-30°C to +70°C (-22°F to 158°F)	
	Calibration	20°C (68°F)	
	Coefficient	<0.01% per oC from 5°C to 40°C (<0.006% per °F from 41°F to 104°F)	
	Standard charging	0°C to +45°C (32°F to 113°F)	
	Fast charging	+10°C to +45°C (50°F to 113°F)	
Humidity	Max	90% RH @ 40°C (104°F) non-condensing	
Altitude	Max	2000m (6562 ft.) to full safety specifications	
Safety		In accordance with EN61010-1 600 V Category III	
EMC		In accordance with IEC61326 including amendment No.1	
Dimensions		220 x 100 x 237 mm (8.6 x 4 x 9.5 in)	
Weight		2.6 kg (5 $^{3}/_{4}$ lb.) including battery module	

Trouble Shooting

Error Message	Fault	Action required.
bAtt	The main battery module is low.	Recharge the main battery or replace with a charged one
_ _ _ _ _	An error has occurred during the measurement. e.g. contact has been lost at one of the probes.	Rectify the error and repeat the measurement.
ERR 114	Checksum Failure in battery backed RAM. This can occur if the main battery module and the backup battery become completely exhausted.	Recharge the main battery or replace it with a charged one. Switch the instrument on. Calibration constants will be retrieved from EEPROM.
ERR 115	Checksum Failure in EEPROM. Calibration constants have been lost. The DLRO will continue to work but the accuracy will now be typically ± 2%. At switch on the display will show the software version with dashes each side e.g. - 1.0 -	Return for recalibration.

It is possible to reset your DLRO 10X to the original factory settings. This will clear all stored results, set the clock to a default value and format, and will set all other settings to their default values. This is effected by holding down the '3' button on the alphanumeric keypad while switching on your instrument.

Accessories

Standard Accessories supplied with instrument.

7 Ah NiMH battery module.	6340-101
DH4 Duplex handspikes (2), one with indicator lights. 1.2m / 4 ft	6111-503
Battery charger for operation from 115/230 V. 50/60Hz supply.	6280-333
Cigar lighter adapter for battery charging.	6280-332
User guide.	6172-681
Warranty book.	6170-618

Optional Accessories at extra cost

Carrying case for DLRO10 and all standard accessories.		6380-138
Carrying case for optional lead sets.		18313
Calibration Shunt, 10 Ω, current rating 1 mA.		249000
Calibration Shunt, 1 Ω, current rating 10 mA.		249001
Calibration Shunt, 100 mΩ, current rating 1A.		249002
Calibration Shunt, 10 mΩ, current rating 10 A.		249003
Certificate of Calibration for Shunts, NIST		CERT-NIST
Replacement tips for DH4 handspikes.	Needle point	25940-012
	Waffle end	25940-014

Optional Test Leads at extra cost

Duplex Leads

DH5 straight duplex handspikes (2).		
One has indicator lights.	2.5m/8ft	6111-517
Duplex handspikes (2) suitable for working on 600 V. systems.	2.5m/8ft	6111-518
Duplex Handspikes (2)with spring loaded helical contacts.	2m/7 ft	242011-7
	2.5m/8ft	6111-022
	5.5m/18ft	242011-18
	6m/20ft	6111-023
	9m/30 ft	242011-30
Straight Duplex Handspikes (2) Heavy Duty with fixed contacts.	2m/7 ft	242002-7
	5.5m/18ft	242002-18
	9m/30 ft	242002-30
Duplex Heavy Duty 5cm (2") C-Clamps. (2)	2m/7 ft	242004-7
	5.5m/18ft	242004-18
	9m/30 ft	242004-30
Duplex handspikes with replaceable Needle Points	2m/7 ft	242003-7
Duplex 1.27 cm (½") Kelvin Clips. (2) gold plated	2m/7 ft	241005-7
silver plated	2m/7 ft	242005-7
Duplex 3.8 cm (1½") Kelvin Clips. (2)	2m/7 ft	242006-7
	5.5m/18ft	242006-18
	9m/30 ft	242006-30

Single Leads

Single handspikes (2) for potential measurement.	2m/7 ft	242021-7
	5.5m/18ft	242021-18
	9m/30 ft	242021-30
Current clips (2) for current connections.	2m/7 ft	242041-7
	75.5m/18ft	242041-18
	9m/30 ft	242041-30

Repair and Warranty

The instrument circuit contains static sensitive devices, and care must be taken in handling the printed circuit board. If the protection of an instrument has been impaired it should not be used, and be sent for repair by suitably trained and qualified personnel. The protection is likely to be impaired if, for example, the instrument shows visible damage, fails to perform the intended measurements, has been subjected to prolonged storage under unfavourable conditions, or has been exposed to severe transport stresses.

New Instruments are Guaranteed for 1 Year from the Date of Purchase by the User.

Note: Any unauthorised prior repair or adjustment will automatically invalidate the Warranty.

Instrument Repair and Spare Parts

For service requirements for ***DUCTER***® Instruments contact:-

AVO INTERNATIONAL
Archcliffe Road
Dover
Kent, CT17 9EN.
England.
Tel: +44 (0) 1304 502243
Fax: +44 (0) 1304 207342

or

AVO INTERNATIONAL
Valley Forge Corporate Centre
2621 Van Buren Avenue
Norristown, PA 19403
U.S.A.
Tel: +1 (610) 676-8579
Fax: +1 (610) 676-8625

or an approved repair company.

Approved Repair Companies

A number of independent instrument repair companies have been approved for repair work on most ***DUCTER***® instruments, using genuine ***DUCTER***® spare parts. Consult the Appointed Distributor / Agent regarding spare parts, repair facilities and advice on the best course of action to take.

Returning an Instrument for Repair

If returning an instrument to the manufacturer for repair, it should be sent freight pre-paid to the appropriate address. A copy of the Invoice and of the packing note should be sent simultaneously by airmail to expedite clearance through Customs. A repair estimate showing freight return and other charges will be submitted to the sender, if required, before work on the instrument commences.

NOTE:

The batteries are Nickel-metal-hydride and if these are changed the disposal of old cells should be in accordance with local regulations.

Ohmmêtre digital basse rèsistance

DUCTER® DLRO®-10 & DLRO®-10X

Guide de l'utilisateur

MEGGER®

Operation

Avertissements de sécurité 27
Description générale 28
Fonctionnement général - DLRO 10 29
Indicateurs d'intensité de test 29
Témoin de bruit 29
Indicateurs 'C' et 'P' 29
Indicateurs d'avertissement 'V' et 'I' 29
Fonctionnement général - DLRO 10X 30
Panneau supérieur - DLRO 10X 30
Ecran du menu principal - DLRO 10X 30
Messages d'avertissement 30
Bruit 31
Indicateurs 'C' et 'P' 31
Avertissement de tension externe 31
Avertissement d'intensité de décharge 31
Le système de menus 31
Menu Test 31
Menu Options 31
Récupérer 31
Afficheur 32
Télécharger 32
Bandes d'acceptation 33
Réglage horloge 33
Effacer les données 34
Stockage 34
Menu Gamme 34
Saisie de notes dans l'écran mémo 34
Stockage des résultats des tests 35
Fonctionnement du clavier 36
Modes de test 37
Mode normal 37
Mode automatique 37
Mode continu 37
Mode Induction 37
Mode unidirectionnel 38
Techniques de test et applications 39
Essais avec les doubles pointes DH4 39
Essais avec les doubles pointes ou des cordons Individuels 39
Séquence de test 40
Résistance des cordons d'essai 40
Surchauffe 40
Module batterie et entretien 41
Le module batterie 41
Mise en charge de la batterie 41
L'indicateur d'état de la batterie 42
Chargement standard 42
Chargement lent 42
Chargement standard mais à cadence lente. 42
Pas de chargement. Il y a un problème de température. 42
Tension d'entrée trop faible. 42
Batterie presque épuisée 42
Erreur : Réinitialisation 43
Problème de surtension 43
Caractéristiques techniques 44-45
Dépannage 46
Accessories 47
Reparation et garantie 48

Les symboles utilisés sur l'instrument sont:

Attention, se reporter au guide de l'utilisateur.

Equipement protégé dans son ensemble par une double isolation (Classe II).

Equipement conforme aux Directives européennes en vigueur.

Avertissements de sécurité

- **Il convient de lire et comprendre ces avertissements de sécurité avant d'utiliser l'instrument.**
- **A chaque fois que possible, les circuits devront être mis hors-tension avant de procéder aux tests.**

  S'il est impossible de mettre le circuit hors-tension, (par ex. Les batteries haute tension ne peuvent être coupées lorsque l'on teste leurs connexions), l'utilisateur doit être conscient du danger. Les bornes de l'instrument seront sous tension une fois connectées au circuit. Il est donc recommandé d'utiliser un jeu de cordons de calibre et d'isolation appropriés pour assurer l'isolement au niveau des bornes.

- **Tester des circuits inducteurs peut être dangereux :**
  Après avoir testé une charge inductrice, une certaine quantité d'énergie sera stockée dans l'inductance. Cette énergie se libère sous la forme d'une intensité de décharge. Débrancher une charge inductrice alors que le courant continue de passer provoquera un arc de haute tension, ce qui constitue un danger à la fois pour l'utilisateur et pour l'élément testé.

  Le DLRO10 est équipé d'un témoin de **DECHARGE**, marqué 'I', qui indique qu'un courant circule dans la boucle C1-C2. Ce témoin clignotera à la fin d'un essai sur une charge inductrice et cessera de clignoter quand l'intensité aura décliné à moins de 1mA. Le DLRO 10X utilise un message sur l'afficheur pour ce faire.
  Pour tester de grandes résistances inductrices, les fils transportant le courant devront être solidement branchés à l'élément à tester avant de commencer les mesures.

  Il n'est pas recommandé d'utiliser les doubles pointes manuelles DH4 pour effectuer des tests sur des charges inductrices. Si par inadvertance on utilise les pointes manuelles DH4 sur une charge inductrice, le témoin L1 des pointes manuelles clignotera orange tandis que le courant de décharge circulera, reproduisant ainsi la fonction du témoin 'I' sur l'instrument. Il est important de maintenir le contact jusqu'à ce que le témoin L1 arrête de clignoter orange et passe au vert, indiquant la fin du test.

- **Ce produit n'est pas intrinsèquement sûr. Ne pas l'utiliser en atmosphère explosive.**
- **NB : la bandoulière est spécialement conçue pour casser si elle est soumise à une contrainte supérieure à environ 50 kg.**

Description générale

Le DUCTER DLRO 10 et le DUCTER DLRO 10X constituent une famille d'ohmmètres basse résistance qui mesurent les résistances dans la gamme de 0,1 µΩ à 2kΩ. Les deux instruments fournissent une intensité de test maximale de 10 A c.c. qui est automatiquement sélectionnée selon la valeur de la résistance testée. Le DLRO10X vous permet de contourner cette sélection automatique et de choisir votre propre intensité de test.

La valeur de la résistance mesurée est envoyée sur l'afficheur de l'instrument avec indication des unités, µΩ, mΩ ou Ω. Le DLRO 10 utilise un grand écran et des indicateurs à diodes électroluminescentes pour afficher la valeur et les unités respectivement, tandis que le DLRO 10X contient toutes les informations sur un afficheur à cristaux liquides rétro-éclairé.

L'utilisation d'une technique de test à quatre bornes supprime la résistance des cordons d'essai de la valeur mesurée, et l'inversion automatique du courant élimine l'effet des tensions permanentes sur l'échantillon de test. De plus, avant et pendant un test, le contact des cordons d'essais est suivi pour réduire encore le risque de lectures erronées.

Un mesurage de résistance prend normalement environ 2,5 secondes et comprend une mesure avec courant direct, courant inversé et l'affichage de la moyenne. Sur le DLRO 10X les trois valeurs s'affichent et en option la mesure peut être limitée au courant direct seul.

L'instrument est alimenté par une batterie rechargeable Nickel Métal Hydride (NiMH) qui permet de réaliser un millier de tests à 10 A sur une seule charge. Le module batterie contient un circuit intelligent qui empêche la batterie de s'endommager par surcharge, ainsi qu'un indicateur d'état.

Un couvercle amovible articulé sur le dos et maintenu fermé par des prises magnétiques recouvre le panneau. Ce couvercle peut être entièrement démonté si nécessaire en le faisant sauter de ses charnières.

Les deux instruments sont protégés contre les branchements accidentels jusqu'à des tensions de 600V c.c. appliquées entre n'importe quelle paire des quatre bornes jusqu'à 10 secondes. Veuillez noter qu'appliquer 600V aux bornes de potentiel provoquera un certain échauffement interne. On peut s'attendre à des erreurs allant jusqu'à 30 chiffres immédiatement après l'application d'un tel voltage. La pleine précision sera rétablie en deux à trois minutes.

Les deux instruments sont livrés avec une paire de doubles pointes manuelles DH4 avec cordons de 1,2 m. Autres longueurs et terminaisons disponibles sur demande.

Fonctionnement générale - DLRO 10X

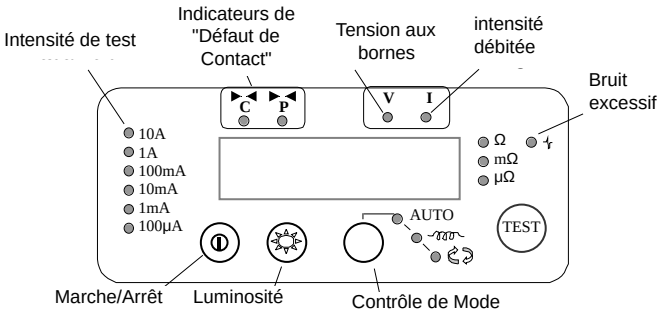

Appuyer sur le bouton Marche/Arrêt pour allumer le DLRO 10. Tous les témoins s'allument, les témoins V et I clignotent, puis la version du logiciel va s'afficher et le témoin W va s'allumer. Si les cordons d'essais n'ont pas été connectés à l'échantillon de test, les témoins 'C' et 'P' vont aussi être allumés. Appuyer de nouveau sur le bouton Marche/Arrêt pour éteindre l'instrument. Si l'instrument n'est pas utilisé pendant 5 minutes, il s'éteint automatiquement.

Ajuster le contrôle de luminosité à un niveau confortable.

Sélectionner le mode de Test en appuyant à plusieurs reprises sur le bouton Mode. Les témoins indicateurs vont parcourir successivement les divers modes de test (voir la section sur les modes de test). Appuyer sur le bouton Test pour commencerles mesures.

Indicateurs d'intensité de test

L'intensité de test est sélectionnée automatiquement par le DLRO 10 et est indiquée par les témoins sur la gauche du panneau. La valeur mesurée s'affiche sur la fenêtre principale et les unités (µΩ, mΩ ou Ω) sont données par les témoins à droite de la fenêtre.

Témoin de bruit

Un bruit dépassant 100 mV 50/60 Hz allumera le témoin 'Bruit' et la mesure ne sera pas d'une précision fiable.

Indicateurs 'C' et 'P'

Le témoin 'C' s'allume pour indiquer une défaillance de contact dans la boucle 'C1-C2'. Le témoin 'P' s'allume s'il y a une coupure dans la boucle P1-P2.

Indicateurs d'avertissement 'V' et 'I'

Si une tension extérieure est appliquée aux bornes, le témoin 'V' va clignoter. C'est un avertissement que le circuit en cours de test est sous tension et probablement dangereux. On ne peut réaliser de test dans cette condition.

Le témoin 'V' fonctionnera si plus de 50 V sont appliqués à l'une ou l'autre borne de tension par rapport à une borne d'intensité. Si la tension apparaît juste entre bornes d'intensité ou juste entre bornes de tension, le témoin fonctionnera à un pic de 100 V ou de 5 V respectivement.

Veuillez noter que le témoin 'V' n'agira que si une tension apparaît entre les bornes. Le témoin ne fonctionnera pas si toutes les bornes sont à la même haute tension. Le témoin ne fonctionnera pas si l'instrument est éteint.

Le témoin 'I' s'allumera si une intensité supérieure à 1 mA continue de circuler après la fin d'un test. Cela suggère qu'une charge inductrice a été testée et continue de se décharger. Ne pas débrancher la boucle de courant avant que le témoin 'I' se soit éteint.

Fonctionnement générale - DLRO 10X

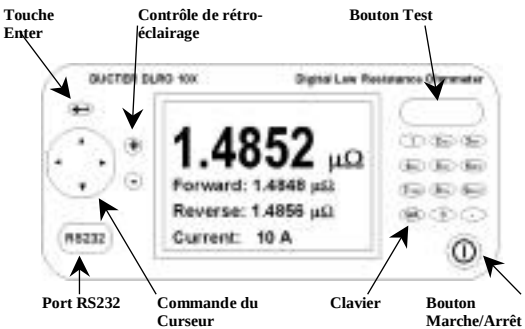

Panneau supérieur - DLRO 10X

Toutes les commandes nécessaires à la programmation et à l'utilisation du DLRO 10X se trouvent sur le panneau supérieur de l'instrument.

A gauche du grand écran à cristaux liquides se trouvent les commandes de déplacement autour de l'affichage, de contrôle du système de menus et d'ajustement du contraste d'affichage et du rétro-éclairage.

A droite de l'affichage se trouve le grand bouton Test, le bouton Marche/Arrêt et un clavier alphanumérique pour la saisie de notes concernant un test et qui seront enregistrées avec les résultats de ce test pour référence ultérieure.

Pour allumer votre DLRO 10X, appuyer sur le bouton Marche/Arrêt pendant environ 1 seconde. Appuyer de nouveau pour éteindre l'instrument. Si l'instrument n'est pas utilisé pendant 5 minutes, il s'éteint automatiquement.

Ecran du menu principal - DLRO 10X

A la première mise sous tension le DLRO 10X affiche un écran de copyright, suivi de l'écran du menu principal.

Cet écran vous fournit des informations telles que le pourcentage de charge restante de la batterie, le numéro d'indice du prochain test, le nombre de tests déjà enregistrés et la date et l'heure actuelles.

Cet écran donne aussi accès au système de menus grâce auquel vous pouvez configurer instrument et choisir les paramètres de test voulus. La navigation dans ce système de menus se fait au moyen des commandes du curseur et de la touche Enter.

```
TEST      OPTIONS    GAMME
NORM                 10A


            70%
        TEST SUIV 1
     0    ENREGISTRE

      27/07/00 12.02
```

Messages d'avertissement

L'écran du menu principal comportera aussi parfois certains messages d'avertissement.

Fonctionnement générale - DLRO 10X

Bruit

Un bruit dépassant 100 mV 50/60 Hz activera le message 'Noise' (bruit) au bas de l'affichage. Au-dessus de ce niveau la précision ne sera pas fiable.

Indicateurs 'C' et 'P'

Une bonne mesure nécessite que le circuit transportant le courant et le circuit de détection de tension à la fois se ferment sur l'élément à tester. Le DLRO 10X vérifie cette continuité. Si la continuité de l'un ou l'autre circuit est mauvaise un message apparaîtra au bas de l'affichage. Il indiquera "P OPEN CIRCUIT" si les contacts de tension sont à haute résistance, "C OPEN CIRCUIT" si le circuit de courant n'est pas fermé ou "CP OPEN CIRCUIT" si les deux circuits sont inadéquats. Vérifier les contacts, puisqu'il n'est pas possible d'effectuer de mesures si l'un de ces messages est visible à l'affichage.

Avertissement de tension externe

Si une tension externe est appliquée aux bornes, un message "EXT VOLTS" clignotera à l'affichage. C'est un avertissement que l'élément à tester est sous tension et peut être dangereux. On ne peut réaliser de test dans cette condition.

Le message "EXT VOLTS" clignotera s'il y a plus de 50V entre l'une ou l'autre des bornes de tension et une borne d'intensité. Si la tension apparaît juste entre bornes d'intensité ou juste entre bornes de tension, le témoin fonctionnera à un pic de 100 V ou de 5 V respectivement.

Veuillez noter que ce message n'apparaîtra que si une tension existe ENTRE les bornes. Le message n'apparaîtra pas si toutes les bornes sont à la même haute tension. Le message ne fonctionnera pas si l'appareil est éteint.

Avertissement d'intensité de décharge

Un message CURRENT FLOW (courant circulant) apparaîtra si une intensité supérieure à 1mA continue de circuler après la fin d'un test. Cela suggère qu'une charge inductrice a été testée et continue de se décharger. Ne pas débrancher la boucle de courant tant que l'avertissement de décharge est visible.

Le système de menus

Utiliser les flèches de gauche et de droite des commandes du curseur pour mettre en surbrillance le menu requis. Appuyer sur la commande descendante du curseur pour voir les options disponibles sur ce menu. Sélectionner l'option voulue à l'aide de la commande du curseur et appuyer sur Enter pour programmer cette option. Selon l'élément de menu choisi, l'affichage soit présentera d'autres options soit retournera à l'écran du menu principal.

Menu Test

Ce sous-menu sélectionne le mode de test. Seul un mode à la fois peut être actif et le mode actif est affiché sous le titre TEST. (Voir Modes de test plus loin dans ce manuel pour les détails de chaque mode.)

Menu Options

Le menu Options a cinq options indépendantes.

Récupérer

Permet le rappel de résultats enregistrés vers l'afficheur ou vers un PC.

Fonctionnement générale - DLRO 10X

Afficheur

Rappelle chaque test, en séquence, vers l'afficheur de l'instrument en commençant par le dernier résultat enregistré.

```
          TEST NUMERO 2
         JJ MM AA HH MM
         09/10/00 12:24
TEST NORMAL
MOYENNE        12.6 µΩ
DIRECTE        14.0 µΩ
INVERSE        11.2 µΩ
COURANT        10 A

RESULTATS             MEMO
```

Utiliser les commandes Monter et Descendre du curseur pour passer respectivement au résultat enregistré plus récent ou plus ancien. Autrement, si vous savez le numéro d'indice du test que vous voulez afficher, tapez le numéro sur le clavier et appuyez sur Enter.

Un astérisque (*) à côté du mot "MEMO" signifie qu'il y a des notes attachées à ce résultat. Appuyer sur la commande droite du curseur pour voir les notes.

Télécharger

Provoque la sortie de tout le contenu de l'enregistrement de données sur le port RS232 à gauche de l'affichage. Une copie du logiciel AVO Download Manager, qui facilite le téléchargement et formate les données, est fourni.

Le téléchargement des données ne provoque pas l'effacement des données de la mémoire. Pour vider les données de la mémoire, voir "Effacer les Données" ci-dessous.

Nota bene – Le DLRO 10X rend aussi les données disponibles via le port RS232 en temps réel et adaptées à l'impression sur une imprimante série autonome.

La sortie se fait sous la forme suivante :

NUMERO DU TEST

TYPE DE TEST

JJ MM AA HH MM

01/01/00 00:33

RESISTANCE DIRECTE

RESISTANCE INVERSEE

RESISTANCE MOYENNE

INTENSITE SELECTIONNEE

LIMITE SUPERIEURE

LIMITE INFERIEURE

REUSSITE

Les trois dernières lignes n'apparaîtront que si des bandes d'acceptation ont été programmées.

Fonctionnement générale - DLRO 10X

Bandes d'acceptation

Cette option vous permet de fixer des limites supérieure et inférieure entre lesquelles la moyenne des résultats du test doit tomber s'il doit être signalé comme une Réussite (une longue tonalité du sonneur). Les lectures hors de ces limites seront signalées comme un Echec (une courte tonalité du sonneur).

Les valeurs sont saisies au clavier avec la virgule, le cas échéant, y compris m ou m (voir la section sur le Clavier alphanumérique). Il n'est pas nécessaire d'entrer le symbole Ω. La limite supérieure doit être inférieure ou égale à 2000,0 Ω et la limite inférieure doit être inférieure à la limite supérieure.

Après avoir rempli la limite supérieure, appuyer sur Enter. Le DLRO 10X va vérifier que des nombres valides ont été saisis et va passer à la limite inférieure. Compléter cette limite et appuyer sur Enter. Le DLRO 10X va vérifier que des nombres valides ont été saisis et va afficher l'option ACTIVER ou DESACTIVER les bandes d'acceptation.

Mettez votre choix en surbrillance puis appuyez sur Enter. Vous reviendrez à l'écran du menu principal.

Note: Les bandes d'acceptation resteront activées ou désactivées jusqu'à ce que vous reveniez à cet écran et que vous changiez de sélection. Si la seule chose dont vous avez besoin est de passer de ACTIVER à DESACTIVER les bandes d'acceptation ou vice versa, entrer dans l'écran PASSBAND (bande d'acceptation) et appuyer sur Enter jusqu'à ce que le choix ACTIVE / DESACTIVE soit montré, ce qui vous permet alors de modifier la sélection.

Réglage horloge

Cette option règle la date et l'heure de l'horloge en temps réel ainsi que le format de la date. Quand vous entrez dans cet écran, la date, l'heure et le format de date actuels s'affichent.

Utiliser les flèches montante et descendante de la commande du curseur pour ajuster la donnée en surbrillance. Passer à l'élément suivant en utilisant la flèche droite de la commande du curseur.

TEST	OPTIONS	GAMME
NORM		AUTO
	JJ M AA HH MM	
	09/10/00 15.08	
	JJ/MM/AA	
	09/10/00 12.02	

La ligne sous JJ MM AAHH MM contient respectivement la date, le mois, l'année à deux chiffres, l'heure de la journée en notation 24 heures et la minute. Ces données doivent être saisies en séquence sans tenir compte du format de date que vous souhaitez utiliser.

Le JJ/MM/AA du bas montre le format de date actuel. Appuyer sur la flèche montante de la commande du curseur fera défiler les options disponibles JJ/MM/AA, MM/JJ/AA ou AA/MM/JJ.

Fonctionnement générale - DLRO 10X

La ligne du bas montre le réglage actuel de la date et de l'heure. Elle est mise à jour quand vous appuyez sur Enter pour quitter la fonction Réglage horloge. Cependant, les tests déjà enregistrés avant le change-ment de format de la date conserveront l'ancien format.

Effacer les données

Sélectionnez **Effacer les données** si vous souhaitez vider la mémoire du DLRO 10X de ses données enregistrées. Au cas où vous auriez sélectionné cette Option par accident, il vous sera demandé de confirmer si vous souhaitez effacer les données ; la réponse par défaut est NON. Remplacez-la par OUI et appuyez sur Enter si vous souhaitez effacer les données.

Nota bene – TOUTES les données enregistrées seront effacées.

Stockage

L'option **Stockage** fixe la procédure par défaut de stockage des données. Elle peut être réglée pour toujours enregistrer les données ou ne jamais les enregistrer. Mettre en surbrillance l'option voulue en bas de l'écran et appuyer sur Enter.

A l'exception des tests effectués en mode Continu, vous aurez à la fin de chaque test l'option de changer la méthode par défaut en sélectionnant STORE (enregistrement) ou NO STORE (pas d'enregistrement) en bas de l'écran résultats.

A la fin d'un test, si la mémoire est pleine, ce message STORE / NO STORE deviendra MEMORY FULL (mémoire pleine) et plus aucun test ne sera enregistré.

Les données sont conservées indéfiniment si un pack batterie chargé est installé. Si la batterie principale est épuisée ou démontée, les données sont conservées pendant une période de 4 jours par une pile de secours interne. Si on remet en place un pack de batteries chargé, la pile de secours se rechargera à sa pleine capacité en une semaine.

Menu Gamme

Le DLRO 10X utilise une intensité de test entre 100 mA et 10A pour mesurer la résistance de l'élément à tester. S'il est réglé sur **AUTO**, le DLRO 10X sélectionnera l'intensité d'après la résistance qu'il détecte. (voir Caractéristiques techniques, Gammes)

Cependant, il peut être souhaitable dans certains cas de régler une intensité de test maximum. Si oui, placer le curseur sur l'intensité voulue et appuyer sur Enter.

Six intensités de test sont disponibles : **10 A, 1 A, 100 mA, 10 mA, 1 mA** et **100 µA**. Sélectionner le maximum de 10A aura le même effet que choisir AUTO.

L'écran du menu principal indiquera la gamme d'intensité active sous le titre RANGE (gamme).

SAISIE DE NOTES DANS L'ECRAN MEMO

A la fin de chaque test, (à l'exception d'un test en mode Continu), vous pouvez sélectionner l'option **STORE** ou **NO STORE** pour enregistrer les résultats du test ou non. Sélectionner l'option voulue à l'aide de la commande du curseur. Ceci contourne le paramètre par défaut réglé sous Options, Enregistrement pour un test seulement.

Si vous souhaitez ajouter des commentaires aux résultats du test, au lieu d'appuyer sur Enter, appuyer brièvement sur l'une des douze touches du clavier. Vous allez accéder à un écran

Fonctionnement générale - DLRO 10X

mémo qui vous permettra d'entrer jusqu'à 200 caractères d'informations alphanumériques concernant le test. Quand vous aurez saisi toutes les informations, appuyez sur Enter et la mesure et le mémo seront enregistrés que STORE ou NO STORE ait été sélectionné.

Si vous ne souhaitez pas ajouter de notes et qu'accepter le réglage STORE / NO STORE par défaut vous satisfait, vous pouvez appuyer sur le bouton Test et un nouveau test commencera.

STOCKAGE DES RESULTATS DES TESTS

Chaque test est numéroté, en commençant par le test 1. Le numéro du test est automatiquement incrémenté, à l'enregistrement de chaque résultat. La mémoire des résultats de tests peut stocker un maximum de 700 tests, chacun étant identifié par son numéro, la date et l'heure.

Il est conseillé de récupérer toutes les données sur un PC puis de les effacer de la mémoire avant que le numéro de test atteigne ce maximum. Effacer les données réinitialisera le numéro de test à 1. Ceci empêchera la perte de données et évitera les confusions lors du rappel de données.

Fonctionnement générale - DLRO 10X

FONCTIONNEMENT DU CLAVIER

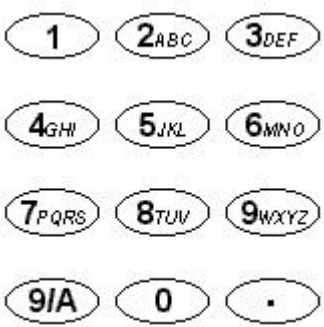

Le clavier à 12 touches est similaire à ceux utilisés sur les téléphones por-tables dans le fait que chaque touche peut produire un caractère parmi plusieurs selon le nombre de fois où l'on appuie sur la touche.

Le clavier est utilisé pour saisir des données dans le champ Mémo.

Appuyer sur la touche bleue marquée 9/A fait passer la fonction du clavier entre les modes alpha et numérique.

En mode alpha une barre clignotante toute hauteur (|) indique le curseur. Les touches 2 à 9 produiront la lettre indiquée sur la touche selon le nombre d'appuis. Par exemple si l'on appuie une fois sur la touche 2 un 'A' apparaîtra, deux fois et un 'B' apparaîtra, etc.

La touche 0 produit un espace.

La touche 1 recule d'un espace et efface le caractère.

En mode numérique une barre clignotante mi-hauteur (') indique le curseur. Les touches marquées 1 - 9 et 0 produiront ce nombre si on appuie dessus. Appuyer sur la touche correspondante brièvement pour entrer le chiffre voulu. Marquer une pause fera passer le curseur au caractère suivant. Si l'on maintient une touche enfoncée, le caractère se répétera automatiquement.

La touche en bas à droite du clavier marquée d'un point est une touche particulière qui produit 20 symboles spéciaux. Chaque appui produira de manière séquentielle le caractère indiqué ci-dessous :

.	Virgule décimale ou point final
Ω	Symbole Ohms
m	m minuscule (abréviation de milli)
µ	Symbole de micro
#	Symbole appelé dièse et couramment utilisé comme raccourci pour "numéro".
%	Signe Pourcent
(	Parenthèse gauche
)	Parenthèse droite
-	Tiret, signe moins
/	Barre oblique
:	Deux points
@	Symbole "at"
√	Coche
!	Point d'exclamation
?	Point d'interrogation
$	Symbole "Dollar"
=	Signe "Egal"
<	Symbole "Inférieur à"
>	Symbole "Supérieur à"
*	Astérisque

Modes de test

Le DLRO 10 dispose de 4 modes de test que l'on sélectionne par des appuis répétés sur le bouton Mode. A la fin de chaque test, le DLRO 10 affichera la moyenne des valeurs obtenues avec les intensités directe et inverse.

Le DLRO 10X a 5 modes. Sur le DLRO 10X on sélectionne ces modes à partir du menu TEST à l'aide de la commande du curseur et de la touche Enter. A la fin d'un test, le DLRO 10X affichera trois valeurs de résistance : celle obtenue avec le courant direct, celle obtenue avec le courant inversé, et la moyenne.

Mode normal

Le mode normal effectue une simple mesure de la résistance de l'échantillon en utilisant les intensités directe et inverse.

Veuillez noter que dans ce mode les cordons d'intensité et de tension à la fois doivent être connectés à l'échan-tillon de test avant d'appuyer sur le bouton Test. Pour faire une autre mesure, s'assurer que les cordons d'es-sais sont connectés et appuyer sur le bouton de test.

Mode automatique

Si le mode automatique est sélectionné, votre instru-ment restera prêt, en attente que les cordons de mesure à la fois d'intensité ET de tension soient connectés à la pièce à tester. Quand c'est fait, un test en courant direct et courant inversé commencera automatiquement.

Pour faire une autre mesure, il suffit de rompre le contact avec l'échantillon de test puis de le rétablir.

Par exemple, si vous mesurez des jonctions sur un long conducteur, vous pouvez laisser le circuit d'intensité connecté aux extrémités opposées du conducteur. Mettre simplement les sondes de tension en contact sur la(es) jonction(s) à mesurer activera alors la mesure.

Mode continu

Le mode continu impose de faire les branchements avant d'appuyer sur le bouton Test. Votre instrument répétera alors ses mesures directe et inverse environ toutes les 3 secondes jusqu'à ce que le contact soit coupé ou que l'on appuie sur le bouton Test.

Mode induction

Les DLRO10 et DLRO10X peuvent réaliser des mesures de résistivité en courant continu sur des récepteurs qui présentent un composant inducteur, àl'aide du mode de contrôle indiqué par le symbole d'induction sur le DLRO10, ou en utilisant le mode induction sur le DLRO10X.

Lorsque l'on mesure des récepteurs inducteurs, il est essentiel que les fils qui portent le courant soient solidement attachés sur l'article à tester et qu'ils ne soient pas retirés avant que toute charge emmagasinée ait été déchargée à la fin du test. Négliger de se conformer à ces instructions pourrait se traduire par la production d'un arc, qui pourrait s'avérer dangereux pour l'instrument et pour l'opérateur.

Une fois le mode induction sélectionné, connecter les quatre fils à l'article à tester et appuyer sur le bouton Test.

Le DLRO va contrôler que les quatre fils sont en contact adéquat avec la pièce à tester, puis va appliquer une intensité de test et essayer de trouver la bonne plage. L'affichage va indiquer 1 - - suivi de 1 - - - -. Pendant ce temps, vous pourrez voir la plage

Modes de test

d'intensité augmenter ou diminuer. Sur le DLRO10, le témoin 'I' clignotera et le message "Current Flowing" (débit de courant) appara"tra sur l'afficheur du DLRO10X.

Après un court délai, les lectures de résistance vont apparaître à l'écran, diminuant graduellement sur une certaine période jusqu'à ce qu'une lecture stable soit finalement obtenue.

Le temps nécessaire pour obtenir une lecture stable peut varier de quelques secondes à plusieurs minutes selon l'inductance et la résistance de l'échantillon testé. Il n'y a pas de limite de temps pour le test en mode induction, qui continuera jusqu'à ce que l'opérateur appuie sur le bouton Test.

Une fois le test terminé, le témoin 'I' restera allumé sur le DLRO10 ou le message "Discharging" (déchargement) appara"tra sur l'afficheur du DLRO10X jusqu'à ce que toute l'énergie emmagasinée soit déchargée. Une fois ces messages éteints, les fils 'C' devront pouvoir être déconnectés en sécurité.

Cependant, l'indicateur de décharge est un dispositif électronique actif en lequel il ne faut pas avoir une confiance aveugle. Vous devrez respecter les modes opératoires de votre entreprise.

A la fin du test, les deux instruments afficheront la résistance mesurée. Sur le DLRO10 le témoin d'intensité correspondant clignotera, tandis que le DLRO10X affichera l'intensité de test à l'écran.

Note : En mode induction, l'intensité de test de 10A ne sera pas utilisée.

Mode unidirectionnel

Sur DLRO 10X seulement, ce mode effectue la mesure comme en mode Automatique mais n'utilise que le courant direct.

Un test peut être répété en coupant le contact et en appliquant de nouveau les sondes de mesure ou en appuyant sur le bouton Test.

Techniques de tests et applications

ESSAIS AVEC LES DOUBLES POINTES DH4

Chaque pointe est marquée de la lettre P. Cette lettre indique les bornes de potentiel. Elles devront constituer les contacts 'intérieurs' lors de la réalisation des mesures (comme illustré dans la section suivante 'Essais à l'aide des doubles pointes manuelles ou de cordons individuels').

L'une des deux pointes manuelles DH4 est équipée de deux témoins marqués L1 et L2 et d'un fil supplémentaire. Ce fil devra être branché dans la douille de 4 mm à côté des bornes principales sur le côté droit de l'instrument. Ces témoins fournissent à l'opérateur des informations qui ne seraient autrement disponibles que sur l'afficheur de l'instrument. La signification de ces témoins est décrite ci-dessous.

Par exemple, en utilisant les doubles pointes manuelles DH4 avec le DLRO 10 en mode de test AUTO :

1. Appuyer sur le bouton TEST sur l'instrument.
2. Le témoin L1 va s'allumer en continu en rouge pour indiquer une rupture de contact. Voir le panneau de l'instrument pour les détails si nécessaire.
3. Si les quatre contacts sont connectés, L1 s'éteint.
4. Aucun témoin ne s'allumera au cours du test à moins d'une rupture de contact.
5. Le témoin L2 va s'allumer en continu en vert si le courant a diminué à moins de 1 mApour signaler la fin du test.
6. Retirer les sondes éteindra le L2 vert (fin du test) et allumera L1 en rouge (pas de contact).

Puisque votre DLRO s'assure toujours d'un bon contact avant d'appliquer l'intensité de test complète, aucune 'projection' ne viendra les pointes de contact. Cependant, si les pointes venaient à s'user ou à s'émousser, il suffirait de les remplacer en les extrayant et en en insérant des neuves.

DLRO 10 et DLRO 10X (sans bandes d'acceptation)		
Témoin L1	**Témoin L2**	**Signification**
Rouge	Eteint	Contact inadéquat sur les contacts C et/ou P
Rouge clignotant	Eteint	Tension présente entre les contacts
Eteint	Vert	Intensité inférieure à 1 mAet test terminé.
DLRO 10X SEULEMENT si des bandes d'acceptation sont fixées		
Eteint	Vert	Réussite mesure
Eteint	Rouge	Echec mesure

ESSAIS AVEC LES DOUBLES POINTES OU DES CORDONS INDIVIDUELS

Connecter les quatre fils comme illustré.

Si vous utilisez les doubles pointes manuelles, assurez-vous que les sondes P sont entre les sondes C.

Techniques de tests et applications

SEQUENCE DE TEST

Appuyer sur le bouton TEST lance la séquence de test.

La résistance de contact est vérifiée en envoyant 100 µAdans la boucle C1-C2 en contrôlant que la tension est inférieure à 4 V. Puis en envoyant 80 µA dans la boucle P1-P2 et en contrôlant que la tension est inférieure à 250 mV. Si l'une ou l'autre valeur est dépassée le témoin ou le message d'avertissement correspondant s'afficheront.

Quand tous les défauts ont été rectifiés, l'intensité de test augmente jusqu'à ce que la tension sur P1-P2 soit dans la gamme de 2 mV à 20 mV. Cette intensité est ensuite appliquée en sens direct puis inverse pour obtenir deux mesures.

Les deux mesures sont affichées par le DLRO 10X en même temps que la moyenne, tandis que le DLRO 10 n'affiche que la moyenne.

Si la résistance combinée des fils d'intensité et de l'échantillon du test est supérieure à 100 mΩ, l'essai à 10 A ne sera pas possible. Une résistance de 1,9 mΩ sera alors testée à l'intensité immédiatement inférieure (1 A) et le résultat sera donné comme 1,900 mΩ au lieu de 1,9000 mΩ.

RESISTANCE DES CORDONS D'ESSAI

Pour les essais à 10 A, la résistance combinée des fils d'intensité ne doit pas dépasser 100 mΩ. Cela garantira une chute de tension dans les cordons d'essai inférieure à 1 Volt et cela permettra les essais à 10 A dans les conditions les plus défavorables. Si vous souhaitez limiter l'intensité de test au plus à 1 A, utilisez sur le DLRO 10 des fils d'intensité avec une résistance d'environ 1Ω, ou bien sélectionnez sur le DLRO 10X 1 A comme intensité de test maximum dans le sous-menu RANGE (gamme).

SURCHAUFFE

Lors de la réalisation de tests qui se répètent rapidement à 10 A, avec des cordons d'essai présentant une résistance combinée de 100 mΩ, 10 W de chaleur seront dissipés dans les fils et 30 W dans l'instrument. Si la température ambiante est élevée, ceci provoquera une surchauffe interne et le message "hot" (chaud) s'affichera et les tests seront suspendus.

Après quelques minutes de refroidissement, les tests pourront reprendre.

Si le problème persiste, utiliser des fils d'intensité de résistance plus élevée (par ex. 200 mΩ à 300 mΩ). Ceci réduira la production de chaleur interne.

Module batterie et entretien

LE MODULE BATTERIE

Le module de batterie contient des piles en nickel métal hydride et dispose d'un système de gestion de batterie intégré qui contrôle le chargement et suit le déchargement. Ceci fournit un système de batterie léger à capacité élevée qui peut être rechargé à tout moment. L'utilisateur ne peut surcharger ou sur-décharger la batterie. Pour votre propre confort, il est préférable de la charger régulièrement pour la maintenir pleine, mais la laisser dans un état déchargé n'endommagera rien.

Sur le devant du module de batterie se trouvent deux boutons et un afficheur électroluminescent à 10 segments.

Pour voir le niveau de charge de votre module de batterie, qu'il soit connecté à votre DLRO ou séparé, appuyer sur le bouton Etat de la batterie. L'indicateur d'état de la batterie présentera de 1 à 10 segments allumés signifiant de 10% à 100% de charge respectivement. Après quelques secondes cet afficheur s'éteint automatiquement.

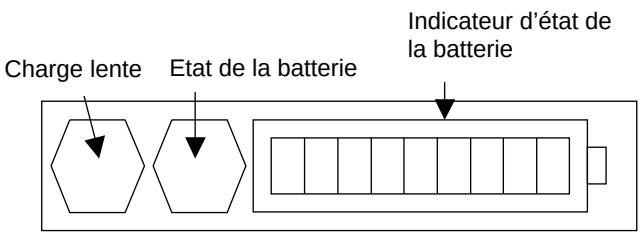

MISE EN CHARGE DE LA BATTERIE

Nota bene - La batterie ne devra être mise en charge que dans la gamme de température de 0°C à 45°C. Le chargement rapide ne sera pas permis si la température est inférieure à 10°C. Le chargement rapide fait monter la température de la batterie. Si la température dépasse 45°C, la vitesse de chargement sera automatiquement réduite.

Pour charger la batterie, vous devez retirer le module de l'instrument. Démonter le module en appuyant sur la surface ronde en saillie des clips de fixation et tirer le haut des clips à l'opposé du corps de l'instrument. Le module se débranche alors de la base de l'instrument.

Brancher le module au chargeur ou le connecter à une batterie 12 Volt type véhicule à l'aide du cordon allume-cigare fourni. L'indicateur à LED "Etat de la batterie" s'allume et présente un mouvement lorsque la batterie se charge. La batterie peut être rechargée avant d'avoir été entièrement déchargée. Elle sera normalement rechargée à 90% de sa capacité en 2 1/2 heures. Le chargement complet peut prendre jusqu'à 4 heures avant d'indiquer que la batterie est pleine, selon son état initial. Une fois le chargement terminé, le circuit de gestion de la batterie s'éteindra de façon à empêcher toute surcharge.

Vous pouvez utiliser sans risque votre module batterie en charge partielle et il ne souffrira pas d'être rangé en étant déchargé. Cependant, vous souhaiterez peut-être avoir une batterie de rechange que vous pourrez interchanger avec celle en service pour assurer une utilisation continue de votre DLRO.

A mesure que la batterie vieillit, elle peut commencer à perdre de sa capacité. Dans ce cas le module de batterie a une fonction de

Module batterie et entretien

chargement lent qui s'actionne en appuyant sur le bouton Charge Lente tout en mettant le chargeur sous tension jusqu'à ce que les barres de l'indicateur commencent à bouger. Cette méthode de chargement peut prendre jusqu'à 48 heures et il vaut mieux la réserver au week-end ou à une période où l'on aura pas besoin de l'instrument.

Une batterie à pleine charge, si on ne l'utilise pas, s'auto-déchargera sur plusieurs semaines (plus vite à température plus élevée). Toujours vérifier l'indicateur "Etat de la batterie" avant de commencer à travailler. Une batterie à pleine charge allumera tous les segments. Une batterie à plat n'en allumera aucun.

Noter que la durée de vie de toutes les batteries est réduite si on les expose à des températures élevées constantes. Une température constante de 30°C causera probablement la panne de la batterie en moins de 5 ans. 40°C raccourcira sa durée de vie à 2 ans.

L'INDICATEUR D'ETAT DE LA BATTERIE

L'indicateur d'état de la batterie fournit des informations sur le niveau de charge de la batterie, mais sert aussi à signaler d'autres conditions, comme suit :

Chargement standard

Le module batterie se charge à sa cadence standard.

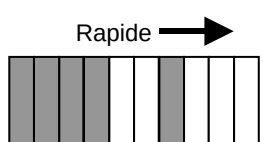

Chargement lent

Le module batterie se charge à sa cadence lente.

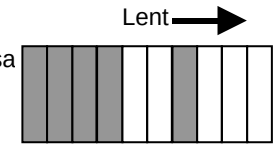

Chargement standard mais à cadence lente.

La batterie a été réglée pour se charger à sa vitesse standard mais, en raison d'une surchauffe, elle est passée sur une cadence de chargement plus basse pour se refroidir. Attendre que la température baisse et/ou passer dans un endroit plus frais.

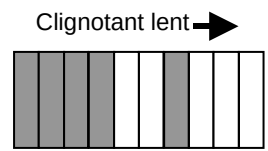

Pas de chargement. Il y a un problème de température.

La batterie est trop chaude ou trop froide et le chargement à donc été interrompu jusqu'à ce que la batterie revienne à une température comprise entre 0°C et 45°C.

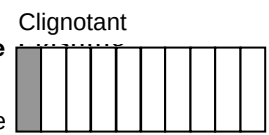

Tension d'entrée trop faible.

L'alimentation du chargeur ne fournit pas assez de tension au module pour charger les batteries.

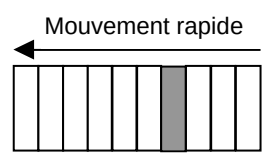

Batterie presque épuisée

La capacité de la batterie est très faible. Rechargez-la.

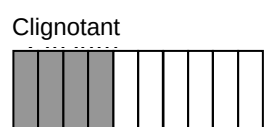

Module batterie et entretien

Erreur : Réinitialisation

Clignotant

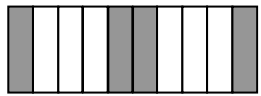

Une erreur s'est produite dans le module de batterie. Le circuit se réinitialise. Attendre quelques instants et le défaut devrait disparaître.

Problème de surtension

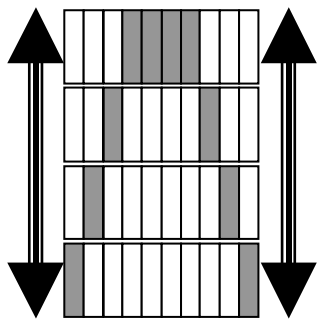

La tension d'alimentation du chargement est trop élevée. Déconnecter le chargeur et rectifier le défaut.

ATTENTION
Un raccordement à une tension supérieure de 15 volts peut engendrer des dammages permanents à la module de batterie.

Caractéristiques techniques

Gammes

Pleine échelle	Résolution	Précision	Tension à pleine échelle		Intensité de test	
			Résistivité	Induction	Résistivité	Induction
1,9999 mΩ	0,1 µΩ	±0,2%±0,2 µΩ	20 mV		10 A	1 A
19,999 mΩ	1 µΩ	±0,2%±2 µΩ	20 mV	20 mV	1 A	1 A
199,99 mΩ	10 µΩ	±0,2%±20 µΩ	20 mV	200 mV	100 mA	1 A
1,9999 Ω	100 µΩ	±0,2%±0,2 mΩ	20 mV	200 mV	10 mA	100 mA
19,999 Ω	1 mΩ	±0,2%±2 mΩ	20 mV	200 mV	1 mA	10 mA
199,99 Ω	10 mΩ	±0,2%±20 mΩ	20 mV	200 mV	100 µA	1 mA
1999,9 Ω	100 mΩ	±0.2%±0.2 Ω	200 mV	200 mV	100 µA	100 µA

		DLRO10	DLRO 10X
Affichage	Mesures	LED 4 $^{1}/_{2}$ chiffres sept segments	Grand écran à cristaux liquides rètro-èclairè
	Gamme et sécurité	Indication pqr LED	
Mesures	Mode	Manuel, Auto, Continu, Induction	Manuel, Auto, Continu, Induction, Unidirectionnel
	Contrôle	Entièrement automatique	Entièrement automatique avec controlé manuel de l'intensité maximum
	Vitesse	<3s pour l'intensité directe et inverse et pour afficher la moyenne	
Méthode de test		Mesures radiométriques en courant continu à simple inversion de cycle et calcul de la moyenne des résultats.	
Précision de l'intensité de test		10%	
Stabilité de l'intensité de test		<10 ppm par seconde à 10 mA <100 ppm par seconde pour des intensités plus élevées	

Caractéristiques techniques

		DLRO10	DLRO10X
Résistance maximum des fils		100 mΩ totale pour utilisation à 10Aquel que soit l'état de la batterie.	
Impédance d'entrée du voltmètre		> 200 kΩ	
Rejet du bourdonnement		Moins de 1% ± 20 chiffres d'erreur additionnelle avec un pic de 100 mV 50/60 Hz. sur les fils de potentiel. Un avertissement indiquera si un bourdonnement ou un bruit dépasse ce niveau.	
Données	Transfert		En temps réel ou depuis la mémoire via RS232
	Stockage		700 tests
	Champ Mémo		Jusqu'à 200 caractères par test via un clavier alphanumérique intégré.
Batterie	Capacité	7 Ah NiMH rechargeable.	
Durée de vie		En général 1000 tests à 10Aavant rechargement	
	Rechargement	Via un chargeur externe 90 V - 260 V 50/60 Hz ou à partir d'une alimentation en courant continu de 12 à 15V	
Temps de mise en charge		2,5 heures à 90% de capacité, 4 h pour le chargement complet	
Température	Utilisation	+5°C à +45°C (41°F à 113°F) au fonctionnement optimal. -10°C à +50°C (14°F à 122°F) à précision réduite	
	Rangement	-30°C à +70°C (-22°F à 158°F)	
	Calibrage	20°C (68°F)	
	Coefficient	<0,01% par °C de 5°C à 40°C (<0,006% par oF de 41°F à 104°F)	
	Chargement standard	0°C à +45°C (32°F à 113°F)	
	Chargement rapide	+10°C à +45°C (50°F à 113°F)	
Humidité	Max	90% HR à 40°C (104°F) non-condensante	
Altitude	Max	2000m selon les caractéristiques de sécurité optimales	
Sécurité		Conforme à la norme EN61010-1 600V Catégorie III	
CEM		La conformité avec la CEI61326 incluant l'amendement No.1	
Dimensions		220 x 100 x 237 mm (8,6 x 4 x 9,5 pouces)	
Poids		2.6 kg y compris le module de batterie	

Dépannage

Message d'erreur	Défaut	Action requise
bAtt	Le module de batterie principal est faible.	Recharger la batterie principale ou la remplacer par une chargée.
– – – – –	Une erreur s'est produite durant les mesures. Par ex. le contact a été perdu sur l'une des sondes.	Rectifier l'erreur et répéter la mesure.
ERR 114	Défaillance de la somme de contrôle sur la RAM sur pile de secours. Cela peut se produire si le module de batterie principal et la pile de secours sont complètement épuisés.	Recharger la batterie principale ou la remplacer par une chargee. Allumer l'instrument. Les constantes de calibrage seront récupérées sur l'EEPROM.
ERR 115	Défaillance de la somme de contrôle sur l'EEPROM. Les constantes de calibrage ont été perdues. Le DLRO continuera de travailler mais la précision sera ensuite en général de ± 2%. A la mise sous tension l'afficheur montre la version du logiciel avec des tirets de chaque côté par ex. - 1.0 -	Envoyer l'appareil au recalibrage.

Il est possible de réinitialiser votre DLRO10X aux réglages originaux d'usine. Cela effacera tous les résultats enregistrés, mettra l'horloge au format et à la valeur par défaut et réglera tous les autres paramètres à leur valeur par défaut. Vous pouvez le faire en maintenant enfoncé le bouton '3' du clavier alphanumérique tout en mettant votre instrument sous tension.

Accessories

Accessoires standard livrés avec l'instrument

Module de batterie 7 Ah NiMH.	6340-101
Pointes manuelles doubles DH4 (2), l'une ayant des voyants indicateurs. 1,2m	6111-503
Chargeur de batterie pour fonctionnement sur alimentation à 115/230 V. 50/60 Hz.	6280-333
Adaptateur d'allume-cigare pour chargement de batterie.	6280-332
Guide de l'utilisateur.	6172-681
Livret de garantie.	6170-618

Accessoires optionnels en plus-value

Mallette de transport pour DLRO10 et tous les accessoires standard.	6380-138
Mallette de transport des jeux de fils optionnels.	18313
Shunt de réglage, 10 Ω, courant à 1 mA.	249000
Shunt de réglage, 1 Ω, courant à 10 mA.	249001
Shunt de réglage, 100 mΩ, courant à 1 A.	249002
Shunt de réglage, 10 mΩ, courant à 10 A.	249003
Certificat de réglage pour les shunts, NIST	CERT-NIST

Extrémité de rechange pour les pointes manuelles DH4.	Pointe d'aiguille	25940-012
	Extrémité gaufrée	25940-014

Fils de tests optionnels en plus-value

Doubles fils

Pointes manuelles doubles droites DH5 (2). Une dispose de voyants indicateurs.	2,5m	6111-517
Pointes manuelles doubles (2) adaptées au travail sur des systèmes à 600 V	2,5m	6111-518
Pointes manuelles doubles (2) avec des contacts hélicoïdaux chargés par ressort.	2m	242011-7
	2,5m	6111-022
	5,5m	242011-18
	6m	6111-023
	9m	242011-30
Pointes manuelles doubles droites (2) à haute résistance avec contacts fixes.	2m	242002-7
	5,5m	242002-18
	9m	242002-30
Doubles à haute résistance 5cm, témoins C-C. (2)	2m	242004-7
	5,5m	242004-18
	9m	242004-30
Pointes manuelles doubles avec pointes d'aiguille remplaçables	2m	242003-7
Clips Kelvin Doubles 1,27 cm . (2) plaqué or	2m	241005-7
Plaqué argent	2m	242005-7
Clips Kelvin Doubles 3,8 cm . (2)	2m	242006-7
	5,5m	242006-18
	9m	242006-30

Simples fils

Pointes manuelles simples (2) pour mesurage de potentiel.	2m	242021-7
	5,5m	242021-18
	9m	242021-30
Clips d'intensité (2) pour les connexions de courant.	2m	242041-7
	5,5m	242041-18
	9m	242041-30

Réparation et garantie

Le circuit de l'instrument contient des composants sensibles à l'électricité statique, et il faut manipuler les plaques de circuits imprimés avec précaution. Si la protection d'un instrument s'est détériorée, il ne devra pas être utilisé, et être envoyé pour des réparations auprès d'un personnel qualifié et formé comme il convient. La protection sera probablement atténuée si, par exemple, l'instrument est clairement endommagé, s'il ne peut effectuer les mesures voulues, ou s'il a été soumis à un stockage dans un environnement défavorable, ou s'il a été exposé à des efforts importants pendant le transport.

Les nouveaux instruments sont garantis pour 1 ans à partir de la date d'achat par l'utilisateur.

Remarque: Toute réparation ou réglage préalablement non autorisé annulera automatiquement la garantie.

Réparation des instruments et pièces détachées

Concernant vos besoins de maintenance d'instruments ***DUCTER®***, contacter:

AVO INTERNATIONAL	ou	MEGGER SARL
Archcliffe Road		29 Allée de Villemomble
Dover		93340 Le Raincy
Kent CT17 9EN		Paris
England		France.
Tel: +44 (0) 1304 502243		Tel: +33 (1) 43.02.37.54
Fax: +44 (0) 1304 207342		Fax: +33 (1) 43.02.16.24

ou une entreprise de réparations agréée.

Entreprises de réparations agréées

Un certain nombre d'entreprises de réparation d'instruments indépendantes ont été approuvées pour des travaux de réparations sur la plupart des instruments ***DUCTER®***, à l'aide de pièces détachées ***DUCTER®*** véritables. Se reporter à la liste des Distributeurs/Agents désignés concernant les pièces détachées, les équipements de réparations et des recommandations sur la meilleure marche à suivre.

Renvoyer un instrument pour réparation

Si vous renvoyez un instrument au fabricant pour des réparations, il doit être envoyé en port payé à l'adresse qui convient. Une copie de la facture et de la note d'emballage doivent être envoyées en même temps par poste par avion afin d'expédier le dédouanement aux Douanes. Un devis des réparations montrant le retour de fret et les autres frais sera présenté à l'envoyeur, s'il le souhaite, avant que le travail sur l'instrument commence.

NOTE:

Les batteries sont en Hydride de Nickel-métal et si elles sont changées, la mise au rebut des vieux éléments devrait être conforme aux réglementations locales.

Digitales niederohmiges Widerstandsmessgerät

DUCTER® DLRO®-10 & DLRO®-10X

Bedienungsanleitung

MEGGER®

Inhalt

Sicherheitshinweise 51
Allgemeine Beschreibung 52
Bedienung - DLRO 10 53
Prüfstromanzeigen 53
Leuchte Rauschen 53
Leuchten 'C' und 'P' 53
Warnleuchten 'V' und 'I' 53
Bedienung - DLRO 10X 54
Obere Geräteplatte - DLRO 10X 54
Hauptmenü - DLRO 10X 54
Warnmeldungen 54
Rauschen 55
Leuchten 'C' und 'P' 55
Warnung vor externer Spannung 55
Warnung vor Entladestrom 55
Das Menüsystem 55
Menü "Test" (Messung) 55
Menü "Options" (Optionen) 55
"Retrieve" (Wiederaufruf) 56
"Display" (Anzeigen) 56
"Download" (Herunterladen) 56
"Passbands " (Toleranzbänder) 57
"Set Clock" (Uhr einstellen) 57
"Delete Data" (Daten löschen) 58
"Storage" (Speichern) 58
Menü "Range" (Bereich) 58
Anmerkungen über Bildschirm Memo eingeben 59
Speicherung von Messergebnissen 59
Benutzung der Tastatur 60
Betriebsarten 61
Betriebsart Normal 61
Betriebsart Automatisch 61
Betriebsart Kontinuierlich 61
Betriebsart Hochleistung 61
Betriebsart Einseitig 62
Vorgehen bei der Messung und Anwendung 63
Messung m. Doppelsondenschienen DH4 63
Doppelsondenschienen oder Einzelkabel 63
Messablauf 64
Widerstand der Prüfkabel 64
Überhitzung 64
Batteriemodul und Pflege 65
Das Batteriemodul 65
Laden der Batterie 65
Die Batterie-Ladezustandsanzeige 66
Standardladung 66
Langsames Laden 66
Standardladung bei niedriger Laderate 66
Keine Ladung - Temperaturproblem 66
Eingangsspannung zu niedrig 66
Batterie beinahe entladen 66
Fehler: Reset 66
Überspannungsproblem 66
Technische Daten 68-69
Fehlersuche 70
Zubehör 71
Reparatur und Garantie 72

Les symboles utilisés sur l'instrument sont:

Attention, se reporter au guide de l'utilisateur.

Equipement protégé dans son ensemble par une double isolation (Classe II).

Equipement conforme aux Directives européennes en vigueur.

SICHERHEITSHINWEISE

- **Diese Sicherheitshinweise sind vor Benutzung des Geräts durchzulesen und zu beachten.**
- **Wo immer möglich, sind Stromkreise vor Durchführung von Messungen abzuschalten.**
  Falls ein Stromkreis nicht abgeschaltet werden kann (z.B. können Hochspannungsbatterien nicht ausgeschaltet werden, wenn deren Anschlüsse überprüft werden sollen), muss sich der Benutzer der Gefahren bewusst sein. Beim Anschluss an den Stromkreis werden die Geräteklemmen stromführend. Daher wird empfohlen, einen entsprechend isolierten und leistungsmäßig ausgelegten Kabelsatz zu verwenden, um Isolierung an den Klemmen bereitzustellen.
- **Messungen an induktiven Stromkreisen können gefährlich sein:**
  Nach Messung einer induktiven Last verbleibt ein gewisses Maß an Energie gespeichert. Diese Energie wird in Form eines Entladestroms freigesetzt. Abklemmen einer induktiven Last, während noch Strom fließt, erzeugt einen Hochspannungsbogen, der eine Gefahr für den Benutzer und das geprüfte Bauteil darstellt.

  Der DLRO10 ist mit einer **ENTLADELEUCHTE** ausgerüstet, gekennzeichnet mit ‘I’, die anzeigt, dass in der C1-C2-Schleife Strom fließt. Diese Leuchte blinkt zum Ende einer Messung einer induktiven Last, während der Entladestrom noch fließt, und hört auf zu blinken, wenn der Strom auf weniger als 1 mAabgeklungen ist. Beim DLRO 10X wird dies mit einer Displaymeldung angezeigt.

  Für die Messung hoher induktiver Widerstände sind die stromführenden Kabel sicher am Prüfobjekt zu befestigen, ehe mit der Messung begonnen wird.

  Es wird nicht empfohlen, handgehaltene Sondenschienen für die Messung induktiver Lasten zu verwenden. Bei versehentlicher Verwendung der handgehaltenen Sondenschiene DH4 bei einer induktiven Last blinkt die Leute L1 auf der Sondenschiene bernsteinfarben, solange Entladestrom fließt, und dupliziert damit die Funktion der Leuchte ‘I’aus dem Gerät. Es ist wichtig, den Kontakt weiter aufrechtzuerhalten, bis die Leuchte L1 aufhört, bernsteinfarben zu blinken, und grün aufleuchtet, was anzeigt, dass die Messung abgeschlossen ist.
- **Dieses Produkt ist nicht eigensicher. Nicht in explosiblen Atmosphären verwenden.**
- **Bitte beachten. Der Tragegurt ist spezifisch darauf ausgelegt, bei einer Belastung von mehr als ca. 50 kg zu reissen.**

Allgemeine Beschreibung

Beim DUCTER DLRO 10 und DUCTER DLRO 10X handelt es sich um Widerstandsmesser, die kleine Widerstände im Bereich von 0,1 µΩ bis 2kΩ messen. Beide Messgeräte stellen einen maximalen Prüfstrom von 10 Ampère Gleichstrom bereit, der automatisch in Abhängigkeit vom zu messenden Widerstand ausgewählt wird. Beim DLRO 10X kann diese automatische Wahl übersteuert werden und der gewünschte Prüfstrom kann vom Benutzer eingestellt werden.

Der gemessene Widerstandswert wird auf dem Display des Geräts zusammen mit den Einheiten µΩ, mΩ oder Ω angezeigt. Beim DLRO 10 erfolgt dies über eine große LED-Anzeige bzw. Anzeigeleuchten, beim DLRO 10X werden alle Informationen über ein klares LCD-Display mit Hintergrundbeleuchtung ausgegeben.

Die Nutzung eines Messverfahrens mit vier Kontakten befreit den Messwert vom Widerstandswert der Prüfkabel, und automatische Stromrichtungsänderung beseitigt die Auswirkungen von Ruhespannungen über das Prüfobjekt. Zudem erfolgt vor und während der Messung eine Überwachung der Prüfkabelkontakte, um die Möglichkeit fehlerhafter Ablesungen weiter zu verringern.

Eine Widerstandsmessung dauert ungefähr 2,5 Sekunden und umfasst eine Messung mit Vorwärtsstrom und mit Rückstrom und die Anzeige des Mittelwerts. Beim DLRO 10X werden alle drei Werte angezeigt und wahlweise kann die Messung lediglich auf Vorwärtsstrom begrenzt werden.

Das Gerät wird über eine aufladbare Nickel-Metallhydrid-Batterie (NiMH) betrieben, die mit einer Aufladung eintausend Messungen mit 10 A Prüfstrom ermöglicht. Das Batteriemodul besitzt eine intelligente Ladekontrollschaltung, die eine Beschädigung der Batterie durch Überladen verhindert. Zudem ist eine Ladezustandsanzeige vorhanden.

Die obere Geräteplatte wird durch einen abnehmbaren Deckel geschützt, der an der Rückseite in Scharnieren sitzt und durch Magnetverschlüsse geschlossen gehalten wird. Dieser Deckel kann durch vollständiges Öffnen und Herausziehen aus den Scharnieren abgenommen werden.

Beide Geräte sind gegen den versehentlichen Anschluss an eine externe Spannung von bis zu 600 V Gleichstrom geschützt, die bis zu 10 Sekunden lang an einem beliebigen Paar der vier Kontakte anliegt. Es sollte beachtet werden, dass ein Anlegen von 600 V an die Potentialkontakte zu Wärmefreisetzung im Gerät führt. Unmittelbar nach Anlegen einer solchen Spannung muss mit einem Fehler von bis zu 30 Stellen gerechnet werden. Volle Messgenauigkeit stellt sich wieder innerhalb von zwei bis drei Minuten ein.

Beide Geräte werden mit einem Paar handgehaltener DH4-Doppelsondenschienen mit 1,2 m langen Anschlusskabeln geliefert. Andere Kabellängen und Sondenformen sind bei Bedarf lieferbar.

Bedienung - DLRO 10

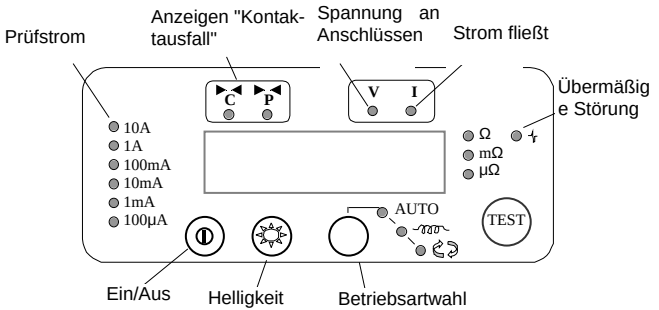

Ein-/Aus-Schalter zum Einschalten des DLRO 10 drücken. Alle Leuchten leuchten auf, die Leuchten 'V' und 'I' blinken, die Softwareversion wird angezeigt und die Leuchte W leuchtet auf. Wurden die Prüfkabel noch nicht am Prüfobjekt angeschlossen, dann leuchten auch die Leuchten 'C' und 'P' auf. Ein-/Aus-Schalter erneut drücken, um das Gerät auszuschalten. Wird das Gerät 5 Minuten lang nicht benutzt, schaltet es sich automatisch aus.

Helligkeitsregler wie gewünscht einstellen.

Messverfahren durch wiederholtes Drücken der Mode-Taste auswählen. Die Anzeigeleuchten schalten der Reihe nach durch die verschiedenen Betriebsarten (siehe Abschnitt über Betriebsarten). Messtaste drücken, um mit einer Messung zu beginnen.

Prüfstromanzeigen

Der Prüfstrom wird vom DLRO 10 automatisch gewählt und durch die Leuchten links auf der Geräteplatte angezeigt. Der gemessene Wert wird im Hauptfenster angezeigt und die Maßeinheiten (µΩ, mΩ oder Ω) werden über die Leuchten rechts vom Fenster kenntlich gemacht.

Leuchte Rauschen

Rauschen von mehr als 100 mV 50/60 Hz führt zum Einschalten der Leuchte Rauschen; die Messgenauigkeit ist nicht verlässlich.

Leuchten 'C' und 'P'

Die Leuchte 'C' leuchtet auf, um eine Kontaktstörung in der 'C1-C2'-Schleife anzuzeigen. Die Leuchte 'P' leuchtet auf, wenn in der 'P1-P2'-Schleife eine Unterbrechung vorliegt..

Warnleuchten 'V' und 'I'

Wird an die Kontakte eine externe Spannung angelegt, dann blinkt die Leuchte 'V'. Dies ist ein Warnhinweis darauf, dass das Prüfobjekt stromführend ist und gefährlich sein könnte. In diesem Zustand kann keine Messung erfolgen.

Die Leuchte 'V' leuchtet auf, wenn mehr als 50 V zwischen einem der Spannungskontakte und einem Stromkontakt anliegt. Ist die Spannung nur zwischen den Spannungskontakten oder den Stromkontakten vorhanden, dann leuchtet die Leuchte bei 5 V bzw. 100 V Spitze auf.

Bitte beachten – Die Leuchte 'V' zeigt lediglich an, dass eine Spannung zwischen Kontakten vorhanden ist. Die Leuchte leuchtet nicht auf, wenn an allen Kontakten eine gleich hohe Spannung anliegt. Die Leuchte arbeitet nicht bei ausgeschaltetem Gerät.

Die Leuchte 'I' leuchtet auf, wenn nach Abschluss einer Messung ein Strom von mehr als 1 mA fließt. Dies verweist darauf, dass eine induktive Last gemessen wurde und immer noch entlädt. Stromschleife nicht abklemmen, bis die Leuchte 'I' nicht erloschen ist.

Bedienung - DLRO 10X

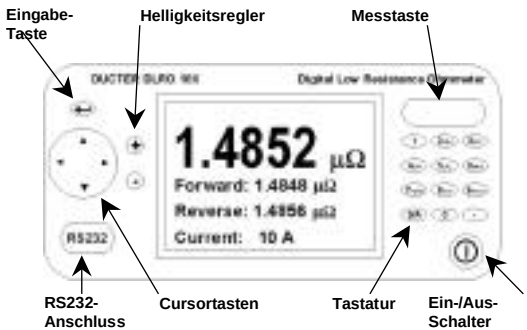

Obere Geräteplatte - DLRO 10X

Alle Bedienelemente für Einstellung und Betrieb des DLRO 10X befinden sich auf der oberen Geräteplatte.

Links vom großen LCD-Display sind die Tasten für die Navigation im Display, den Menüzugriff und die Einstellung von Kontrast und Helligkeit des Displays angeordnet.

Rechts vom Display befindet sich die große Messtaste, der Ein-/Aus-Schalter und die alphanumerische Tastatur zur Eingabe von Anmerkungen zu Messwerten, die für spätere Bezugnahme zusammen mit den Werten abgespeichert werden.

Zum Einschalten des DLRO 10X den Ein-/Aus-Schalter ca. 1 Sekunde lang gedrückt halten. Zum Ausschalten den Schalter erneut drücken. Wird das Gerät 5 Minuten lang nicht benutzt, schaltet es sich automatisch aus.

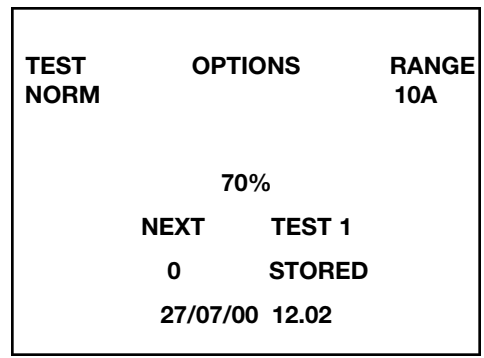

Hauptmenü - DLRO 10X

Nach dem Einschalten wird vom DLRO 10X ein Copyright-Hinweis und dann das Hauptmenü angezeigt.

Hier können Informationen wie verbleibende Batterieladung in Prozent, Nummer der nächsten Messung, Anzahl schon gespeicherter Messungen und aktuelles Datum und Uhrzeit abgelesen werden.

Über das Hauptmenü wird auch zum Einrichten des Geräts und zur Auswahl der Parameter für die Messung auf das restliche Menüsystem zugegriffen. Navigation im Menüsystem erfolgt mit den Cursortasten und der Eingabetaste.

Warnmeldungen

Im Hauptmenü werden auch unter entsprechenden Umständen Warnmeldungen angezeigt.

Bedienung - DLRO 10X

Rauschen

Rauschen von mehr als 100 mV 50/60 Hz führt zur Anzeige der Warnmeldung 'Noise' (Rauschen) an der Unterseite des Displays. Oberhalb dieses Wertes ist die Messgenauigkeit nicht mehr gewährleistet.

Leuchten 'C' und 'P'

Für eine gute Messung müssen sowohl der stromführende als auch der spannungsermittelnde Stromkreis über das Prüfobjekt geschlossen sein. Das DLRO 10X prüft auf Vorliegen von Durchgang. Bei schlechtem Durchgang in einem dieser Kreise wird an der Unterseite des Displays eine Meldung angezeigt. Diese lautet "P OPEN CIRCUIT" (P Unterbrechung), wenn an den Spannungskontakten hoher Widerstand vorliegt, "C OPEN CIRCUIT" (C Unterbrechung), wenn der stromführende Kreis nicht geschlossen wird, oder "CP OPEN CIRCUIT" (CP Unterbrechung), wenn beide Kreise nicht geschlossen wurden. Kontakte prüfen, da bei Anzeige einer dieser Meldungen keine Messung erfolgen kann.

Warnung vor externer Spannung

Liegt an den Klemmen eine externe Spannung an, dann blinkt auf dem Display die Meldung "EXT VOLTS" (Externe Spannung). Dies ist ein Warnhinweis darauf, dass das Prüfobjekt stromführend ist und gefährlich sein könnte. In diesem Zustand kann keine Messung erfolgen.

Die Meldung "EXT VOLTS" blinkt, wenn mehr als 50 V zwischen einem der Spannungskontakte und einem Stromkontakt anliegt. Ist die Spannung nur zwischen den Spannungskontakten oder den Stromkontakten vorhanden, dann wird die Meldung bei 100 V bzw. 5 V Spitze angezeigt.

Bitte beachten – Die Meldung erscheint lediglich, wenn eine Spannung ZWISCHEN Kontakten vorhanden ist. Die Meldung wird nicht angezeigt, wenn an allen Kontakten eine gleich hohe Spannung anliegt. Die Meldung wird nicht bei ausgeschaltetem Gerät angezeigt.

Warnung vor Entladestrom

Die Meldung "CURRENT FLOW" (Stromfluss) wird angezeigt, wenn nach Abschluss einer Messung ein Strom von mehr als 1 mA fließt. Dies verweist darauf, dass eine induktive Last gemessen wurde und immer noch entlädt. Stromschleife nicht abklemmen, während diese Meldung angezeigt wird.

Das Menüsystem

Zum Hervorheben des gewünschten Untermenüs die Cursortasten Rechts und Links verwenden. Cursortaste Ab drücken, um die in diesem Untermenü verfügbaren Optionen einzusehen. Gewünschte Option mit den Cursortasten markieren und mit der Eingabetaste auswählen. Anhängig von der gewählten Option werden auf dem Display entweder weitere Optionen angezeigt oder es erfolgt Rückkehr zum Hauptmenü.

Menü "Test" (Messung)

Über dieses Untermenü werden die Messbetriebsarten ausgewählt. Zu einer gegebenen Zeit kann immer nur eine Betriebsart aktiv sein, und diese wird unter der Überschrift TEST angezeigt. (Siehe Abschnitt über die Messbetriebsarten weiter hinten für genauere Informationen.)

Menü "Options" (Optionen)

Im Menü Options sind fünf Einträge vorhanden, die nicht zueinander in Beziehung stehen.

Bedienung - DLRO 10X

"Retrieve" (Wiederaufruf)

Ermöglicht den Aufruf gespeicherter Messergebnisse zur Anzeige auf dem Display oder auf einem PC.

```
      TEST NUMBER 2
     DD MM YY HH MM
     09/10/00 12:24
TEST NORMAL
AVERAGE     12.6 µΩ
FORWARD     14.0 µΩ
REVERSE     11.2 µΩ
CURRENT     10 A

RESULTS         MEMO
```

"Display" (Anzeigen)

Ruft jede Messung für die Anzeige auf dem Gerätedisplay auf, beginnend mit der letzten.

Mit den Cursortasten Auf und Ab auf frühere bzw. spätere abgespeicherte Messergebnisse zugreifen. Falls die Nummer der anzuzeigenden Messung bekannt ist, alternativ hierzu die Nummer über die Tastatur eingeben und die Eingabetaste drücken.

Ein Sternchen (*) neben dem Wort "MEMO" verweist darauf, daß zu diesem Messwert Anmerkungen existieren. Cursortaste Rechts drücken, um die Anmerkungen einzusehen.

"Download" (Herunterladen)

Bewirkt, dass der gesamte Inhalt des Datenspeichers über den RS232-Anschluss links vom Display ausgegeben wird. Eine Kopie der Software "AVO Download Manager" für das Herunterladen und Formatieren der Daten gehört zum Lieferumfang.

Ein Herunterladen von Daten bewirkt nicht, dass die gespeicherten Daten aus dem Speicher gelöscht werden. Zum Löschen von Daten siehe "Delete Data" (Daten löschen) unten.

Bitte beachten – Das DLRO 10X stellt auch Echtzeitdaten über den RS232-Anschluss bereit, die auf einem eingeschalteten seriellen Drucker ausgedruckt werden können.

Die Datenausgabe hat folgende Form:

MESSUNG NUMMER

MESSBETRIEBSART

TT MM JJ HH MM

01/01/00 00:33

WIDERSTAND BEI VORWÄRTSSTROM

WIDERSTAND BEI RÜCKSTROM

WIDERSTANDSMITTEL

GEWÄHLTER PRÜFSTROM

OBERER GRENZWERT

UNTERER GRENZWERT

Bedienung - DLRO 10X

PASS (BESTANDEN)

Die letzten drei Zeilen erscheinen nur, wenn Toleranzbänder eingerichtet wurden.

"Passbands " (Toleranzbänder)

Mit dieser Option können oberer und unterer Grenzwert eingegeben werden, zwischen denen der Mittelwert der Messungen liegen muss, damit die Prüfung als "Pass" (bestanden) akzeptiert wird (ein langer Ton vom Summer). Ablesungen außerhalb dieses Toleranzbandes werden als "Fail" (nicht bestanden) zurückgewiesen (ein kurzer Ton vom Summer).

Werte werden ggf. komplett mit Dezimalpunkt einschließlich m oder m über die Tastatur eingegeben (siehe Abschnitt über die alphanumerische Tastatur). Das Symbol Ω muss nicht eingegeben werden. Der obere Grenzwert muss kleiner als oder gleich 2000.0 Ω sein, der untere Grenzwert kleiner als der obere.

Nach Eingabe des oberen Grenzwerts die Eingabetaste drücken. Das DLRO 10X prüft, dass ein gültiger Zahlenwert eingegeben wurde, und geht dann zum unteren Grenzwert über. Unteren Grenzwert eingeben und die Eingabetaste drücken. Das DLRO 10X prüft, dass ein gültiger Zahlenwert eingegeben wurde, und zeigt dann die Optionen ENABLE (Aktivieren) oder DISABLE (Deaktivieren) des Toleranzbandes an.

Gewünschte Option markieren und die Eingabetaste drücken. Es erfolgt Rückkehr zum Hauptmenü.

Hinweis: Toleranzbänder bleiben aktiviert oder deaktiviert, bis über diesen Menüeintrag der Status geändert wird. Sollen eingerichtete Toleranzbänder lediglich von AKTIVIERT auf DEAKTIVIERT gesetzt werden oder umgekehrt, den Menüeintrag PASSBAND (Toleranzband) aufrufen und die Eingabetaste drücken, bis die Option ENABLE / DISABLE angezeigt wird, und dann den Status ändern.

"Set Clock" (Uhr einstellen)

Mit dieser Option werden Datum und Uhrzeit für die Echtzeituhr eingestellt, ebenso wie das Datumsformat. Bei Aufruf dieses Menüeintrags werden aktuelles Datum und Uhrzeit sowie Datumsformat angezeigt.

Mit den Cursortasten Auf und Ab einen markierten Wert abändern. Mit der Cursortaste Rechts zum nächsten Wert übergehen.

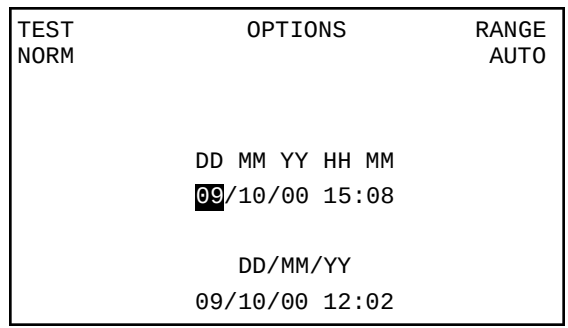

Die Zeile unter DD MM YY HH MM (TTMM JJ HH MM) zeigt den Tag, den Monat, das Jahr (zwei Stellen), die Stunde (24-Stunden-Uhr) und die Minute an. Diese müssen in dieser Reihenfolge eingegeben werden, unabhängig davon, welches Datumsformat genutzt werden soll.

Bedienung - DLRO 10X

Die untere Anzeige DD/MM/YY (TT(MM(JJ) zeigt das aktuelle Datumsformat. Drücken der Cursortaste Auf durchschreitet die verfügbaren Optionen: DD/MM/YY, MM/DD/YY oder YY/MM/DD (TT/MM/JJ, MM/TT/JJ oder JJ/MM/TT).

Die unterste Zeile zeigt die gegenwärtige Einstellung von Datum und Uhrzeit an. Diese wird aktualisiert, wenn durch Drücken der Eingabetaste die Option "Set Clock" verlassen wird. Schon mit einem anderen Datumsformat abgespeicherte Messungen behalten allerdings das alte Datumsformat bei.

"Delete Data" (Daten löschen)

Die Option **"Delete Data"** auswählen, wenn im DLRO 10X gespeicherte Daten gelöscht werden sollen. Wurde diese Option versehentlich ausgewählt, muss ein Löschen der Daten bestätigt werden, die Vorgabeeinstellung lautet auf NO (Nein). Sollen alle Daten gelöscht werden, diesen Eintrag auf YES (JA) setzen und die Eingabetaste drücken.

Bitte beachten – ALLE gespeicherten Daten werden gelöscht.

"Storage" (Speichern)

Mit der Option **"Storage"** wird die Vorgabeeinstellung für die Datenspeicherung eingestellt. Die Funktion kann auf Daten immer speichern oder Daten niemals speichern gesetzt werden. Gewünschte Wahl unten im Display vornehmen und die Eingabetaste drücken.

Abgesehen von Messungen in der Betriebsart Kontinuierlich, kann nach Abschluss jeder Messung die Vorgabeeinstellung abgeändert werden, indem unten auf der Messwertanzeige STORE (Speichern) oder NO STORE (Nicht speichern) ausgewählt wird.

Ist nach Abschluss einer Messung der Gerätespeicher voll, ändert sich die Anzeige auf MEMORY FULL (Speicher voll), und es können keine weiteren Messergebnisse abgespeichert werden.

Daten bleiben zeitlich unbegrenzt gespeichert, wenn eine geladene Batterie eingebaut ist. Wenn die Batterie entladen ist oder ausgebaut wird, dann wird bis zu vier Tage lang die Datenspeicherung durch eine interne Hilfsbatterie aufrechterhalten. Wird wieder eine geladene Batterie eingebaut, lädt sich die Hilfsbatterie wieder innerhalb einer Woche auf volle Kapazität auf.

Menü "Range" (Bereich)

Zur Messung des Widerstands eines Prüfobjekts arbeitet das DLRO 10X mit einem Prüfstrom im Bereich zwischen 100 µAund 10 A. Bei Einstellung auf **AUTO** wird der Prüfstrom vom DLRO 10X in Abhängigkeit vom ermittelten Widerstand gewählt (siehe Technische Daten, Bereiche).

In manchen Fällen kann es allerdings wünschenswert sein, den maximalen Prüfstrom begrenzen zu wollen. In diesem Fall den Cursor auf den gewünschten Prüfstromwert setzen und die Eingabetaste drücken.

Es kann zwischen sechs Prüfströmen gewählt werden: 10 A, 1 A, 100 mA, 10 mA, 1 mA und 100 µA. Einstellung auf den Maximalwert von 10 A hat den gleichen Effekt wie Auswahl von AUTO.

Im Hauptmenü wird der aktuell gewählte Prüfstrom unter der Überschrift RANGE (Bereich) angezeigt.

Bedienung - DLRO 10X

ANMERKUNGEN ÜBER DEN BILDSCHIRM MEMO EINGEBEN

Nach Abschluss jeder Messung *(außer bei Messungen in der Betriebsart Kontinuierlich)* kann zwischen den Optionen **STORE** (Speichern) und **NO STORE** (Nicht speichern) ausgewählt werden. Gewünschte Option mit den Cursortasten auswählen. Dies übersteuert für eine Messung die Vorgabeeinstellung, die über Options (Optionen), Storage (Speichern) eingestellt wurde.

Wenn den Messergebnissen Anmerkungen hinzugefügt werden sollen, statt Drücken der Eingabetaste kurz eine der zwölf Tasten der Tastatur antippen. Es wird der Bildschirm Memo angezeigt, auf dem Anmerkungen zur Messung mit bis zu 200 alphanumerischen Zeichen eingegeben werden können. Ist die Informationseingabe beendet, die Eingabetaste drücken; Messergebnis und Anmerkungen werden abgespeichert, unabhängig davon, ob STORE oder NO STORE gewählt wurde.

Sollen keine Anmerkungen hinzugefügt werden und ist die Vorgabeeinstellung für STORE / NO STORE in Ordnung, kann die Messtaste gedrückt werden und es erfolgt eine neue Messung.

SPEICHERUNG VON MESSERGEBNISSEN

Jeder Messung wird eine Nummer zugewiesen, beginnend bei Messung Nummer 1. Die Zahl wird automatisch beim Speichern jedes Ergebnisses erhöht. Der Speicher für die Messergebnisse kann maximal 700 Messungen enthalten, wobei jede durch ihre Nummer sowie Datum und Uhrzeit identifiziert wird.

Bedienung - DLRO 10X

BENUTZUNG DER TASTATUR

Die Tastatur mit 12 Tasten ähnelt jener eines Mobiltelefons, insofern als über jede Taste einer von mehreren Buchstaben eingegeben werden kann, abhängig davon, wie häufig die Taste gedrückt wird.

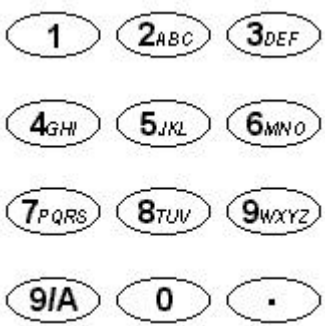

Über die Tastatur werden Einträge in das Anmerkungsfeld eingegeben.

Drücken der blauen Taste mit der Beschriftung 9/A schaltet zwischen Buchstaben- und Zahleneingabe um.

Bei der Buchstabeneingabe gibt ein blinkender senkrechter Strich voller Höhe (|) die Cursorstellung an. Abhängig davon, wie häufig sie gedrückt werden, dienen die Tasten 2 bis 9 zur Eingabe der Buchstaben, die auf den Tasten stehen. Wird die Taste 2 beispielsweise einmal gedrückt, erscheint ein 'A', wird sie zweimal gedrückt, erscheint ein 'B' usw.

Die Taste 0 erbringt eine Leerstelle.

Die Taste 1 ist die Rückschritt-Taste, mit der das davor stehende Zeichen gelöscht wird..

Bei der Zahleneingabe gibt ein blinkender senkrechter Strich halber Höhe (|) die Cursorstellung an. Die Tasten 1 - 9 und 0 erbringen beim Drücken die betreffende Zahl. Kurzes Drücken jeder Taste führt zur Anzeige der gewünschten Zahl. Pausieren bewirkt, dass der Cursor zur nächsten Stelle übergeht. Gedrückthalten einer Taste führt zur automatischen Eingabewiederholung.

Die Taste mit einem Punkt in der rechten unteren Ecke der Tastatur ist eine Sonderzeichentaste, mit der 20 Spezialzeichen eingegeben werden können. Jedes Drücken führt der Reihe nach zur Eingabe der in der Tabelle gezeigten Zeichen. -

. Dezimalpunkt oder Punkt
Ω Symbol für Ohm
m Kleines m (Abkürzung für Milli)
µ Symbol für Mikro
Raute (kurz für "Nummer")
% Prozentzeichen
(Linke runde Klammer
) Rechte runde Klammer
- Gedankenstrich/Bindestrich/Minuszeichen
/ Schrägstrich
: Doppelpunkt
@ Symbol “at”
√ Häkchen
! Ausrufezeichen
? Fragezeichen
$ "Dollar"-Symbol
= Gleichheitszeichen
< Symbol "Kleiner als"
> Symbol "Größer als"
* Sternchen

Betriebsarten

Das DLRO 10 verfügt über fünf Betriebsarten für Messungen, die durch wiederholtes Drücken der Mode-Taste ausgewählt werden. Am Ende jeder Messung wird vom DLRO 10 der Mittelwert aus den Messungen mit Vorwärtsstrom und Rückstrom angezeigt.

Das DLRO 10X verfügt über sechs Betriebsarten. Beim DLRO 10X werden diese Betriebsarten vom Menü "Test" aus mit den Cursortasten und der Eingabetaste ausgewählt. Am Ende einer Messung zeigt das DLRO 10X drei Widerstandswerte an: den mit Vorwärtsstrom gemessenen, den mit Rückstrom gemessenen und den Mittelwert.

Betriebsart Normal

In der Betriebsart Normal erfolgt eine Einzelmessung des Widerstands des Prüfobjekts mit Vorwärtsstrom und Rückstrom.

Bitte beachten, dass in dieser Betriebsart sowohl die Strom- als auch die Spannungskabel am Prüfobjekt angeschlossen sein müssen, ehe die Messtaste gedrückt wird. Für eine weitere Messung sicherstellen, dass die Kabel angeschlossen sind, und die Messtaste drücken.

Betriebsart Automatisch

Ist die Betriebsart Automatisch gewählt, verbleibt das Gerät im Bereitschaftszustand und wartet darauf, dass Strom- UND Spannungsmesskabel am Prüfobjekt angeschlossen werden. Ist dies der Fall, erfolgt eine Messung mit Vorwärtsstrom und mit Rückstrom automatisch.

Um eine weitere Messung durchzuführen, einfach den Kontakt mit dem Prüfobjekt unterbrechen und erneuten Kontakt herstellen.

Werden beispielsweise Verbindungen an einer langen Sammelschiene überprüft, dann kann der stromführende Kreis an gegenüberliegenden Enden der Sammelschiene angeschlossen bleiben. Einfaches Ansetzen der Sonden für die Spannungsmessung an der/den zu messenden Verbindung(en) löst eine Messung durch das Gerät aus.

Betriebsart Kontinuierlich

In der Betriebsart Kontinuierlich müssen die Anschlüsse hergestellt worden sein, ehe die Messtaste gedrückt wird. Das Gerät wiederholt dann Messungen mit Vorwärtsstrom und mit Rückstrom und zeigt die Messergebnisse ca. alle 3 Sekunden an, bis der Kontakt unterbrochen oder die Messtaste erneut gedrückt wird.

Induktivmodus

Die Geräte DLRO10 und DLRO10X sind dazu in der Lage, mit Hilfe des auf der Induktorsymbolanzeige des DLRO10 angezeigten Testmodus, oder im Falle des DLRO10X mit Hilfe des Induktivmodus, DC-Widerstandsmessungen an Lasten durchzuführen, die eine induktive Komponente aufweisen.

Wenn induktive Lasten gemessen werden sollen ist es erforderlich, dass die spannungsführenen Kabel sicher an dem Teil befestigt werden, das getested werden soll, und dass sie nicht eher entfernt werden, bis eine möglicherweise gespeicherte Spannung am Ende des Testverfahrens entladen wurde. Wenn diese Anforderungen nicht erfüllt werden, kann dies zur Formung eines Lichtbogens führen, der sowohl das Instrument wie auch das Betriebspersonal gefährden kπnnen.

Nach Wählen des Induktivmodus sollten Sie alle vier Kabel an das Teil anschliessen, das getested werden soll, und den Testschalter drücken.

Ihr DLRO wird sicherstellen, dass alle vier Kabel über

Betriebsarten

ausreichenden Kontakt mit dem zu testenden Teil verfügen, und wird dann eine Testspannung anwenden und versuchen, den korrekten Bereich zu finden. Die Anzeige zeigt dabei zunächst 1 - - an, und danach 1 - - - -. Während dieser Zeit werden Sie möglicherweise einen Anstieg oder einen Abfall des Spannungsbereiches sehen. Auf dem DLRO10 wird die 'I' Leuchte blinken, und auf der Anzeige des DLRO10X wird die Mitteilung "Spannung fliesst" erscheinen.

Nach einer kurzen Zeit werden auf der Anzeige Widerstandswerte erscheinen, die Ÿber eine gewisse Zeitspanne hinweg abfallen werden, bis eine stabile Anzeige erreicht ist.

Die für das Erreichen einer solchen stabilen Anzeige erforderliche Zeitspanne kann von ein paar Sekunden bis zu mehreren Minuten dauern, und wird von der Induktivität und dem Widerstand des zu testenden Teils abhängen. Der Induktivmodustest verfügt über keinerlei Zeitgrenze und wird andauern, bis der Betreiber wieder den Testschalter drückt.

Wenn der Test beendet ist, wird auf dem DLRO10 die 'I' Leuchte ununterbrochen aufleuchten, und auf der Anzeige des DLRO10X wird die Mitteilung "Entladung" erscheinen, bis mögliche gespeicherte Energie entladen ist. Wenn diese Mitteilungen erlöschen ist es normalerweise sicher, die 'C'-Kabel abzutrennen.

Die Entladungsanzeige ist jedoch ein aktives elektronisches Teil, und Sie sollten sich deshalb nicht total auf sie verlassen. Sie sollten ausserdem den Betriebsvorschriften Ihres Unternehmens folgen.

Am Ende des Testverfahrens werden beide Instrumente den gemessenen Widerstand anzeigen, wobei das DLRO10 die jeweilige Spannungsleuchte aufblinken lässt, und das DLRO10X die Testspannung auf der Anzeige aufführt.

Bitte beachten: - Im Induktivmodus wird die 10A Testspannung nicht angewendet.

Einseitig gerichteter Modus

Dieser Modus, der nur auf dem DLRO10X vorhanden ist, stellt das Gerät in den automatischen Modus, verwendet dabei aber lediglich Durchlaßstrom.

Ein Test kann entweder durch Brechen des Kontaktes und Neuanschluss der Testsonden, oder durch erneutes DrŸcken des Testschalters wiederholt werden.

Vorgehen bei der Messung und Anwendung

MESSUNG MIT DEN HANDGEHALTENEN DOPPELSONDENSCHIENEN DH4

Jede Sondenschiene ist mit dem Buchstaben P gekennzeichnet. Dies verweist auf die Potentialklemmen. Bei diesen sollte es sich um die 'innenseitigen' Kontakte für Messungen handeln (wie im nächsten Abschnitt 'Messung mit Doppelsondenschienen oder Einzelkabeln' gezeigt).

Eine der DH4 Sondenschienen besitzt zwei Leuchten L1 und L2 sowie ein zusätzliches Kabel. Dieses Kabel wird in die 4 mm Steckbuchse neben den Hauptklemmen auf der rechten Geräteseite eingesteckt. Diese Leuchten stellen dem Benutzer Informationen bereit, die sonst vom Gerätedisplay abgelesen werden müssten. Die Bedeutung wird unten beschrieben.

Zum Beispiel Verwendung der Doppelsondenschienen DH4 zusammen mit dem DLRO 10 in der Betriebsart AUTO:

1. Messtaste auf dem Gerät drücken.
2. Leuchte L1 leuchtet rot auf, um eine Kontaktstörung anzuzeigen. Ggf. Einzelheiten von der Geräteplatte ablesen.
3. Wurden alle vier Kontakte hergestellt, erlischt L1.
4. Keine Leuchte leuchtet während der Messung auf, es sei denn, es kommt zu einer Kontaktstörung.
5. Leuchte L2 leuchtet grün auf, wenn der Stromfluss auf weniger als 1 mA angeklungen ist, um Ende der Messung anzuzeigen.
6. Bei Wegnahme der Sonden erlischt die grüne Leuchte L2 (Ende der Messung) und die rote Leuchte L1 (Kontaktstörung) leuchtet auf.

Da vom DLRO vor Anlegen des vollen Prüfstroms immer auf guten Kontakt geprüft wird, kommt es zu keinem 'Überschlag', der die Kontaktspitzen erodieren könnte. Liegt an den Spitzen jedoch Verschleiß oder Abstumpfung vor, können diese durch Herausziehen und Einsetzen neuer Spitzen leicht erneuert werden.

DLRO 10 und DLRO 10X (keine Toleranzbänder)		
Leuchte L1	**Leuchte L2**	**Bedeutung**
Rot	Aus	Unzureichender Kontakt an den C- und/oder P-Sonden
Blinkt rot	Aus	Spannung zwischen Kontakten vorhanden
Aus	Grün	Strom kleiner als 1 mAund Messung beendet
NUR DLRO 10X mit Toleranzbändern		
Aus	Grün	Messung bestanden
Aus	Rot	Messung nicht bestanden

Vorgehen bei der Messung und Anwendung

MESSUNG MIT DOPPELSONDENSCHIENEN ODER EINZELKABELN.

Die vier Kabel wie gezeigt anschließen.

Bei Verwendung von Doppelsondenschienen sicherstellen, dass sich die mit P gekennzeichnete Sonde innenseitig von der mit C gekennzeichneten befindet.

MESSABLAUF

Drücken der Messtaste startet den Messablauf.

Der Kontaktwiderstand wird geprüft, indem 100 µA durch die Schleife C1-C2 gegeben werden und geprüft wird, dass die Spannung kleiner als 4 V ist. Dann werden 80 µA durch die Schleife P1-P2 gegeben und geprüft, dass die Spannung kleiner als 250 mV ist. Wird einer der Werte überschritten, leuchtet entweder die entsprechende Leuchte auf oder es wird eine Warnmeldung angezeigt.

Nach Richtigstellung aller Störungen wird der Prüfstrom angehoben, bis die Spannung auf P1-P2 sich im Bereich 2 mV bis 20 mV befindet. Strom wird daraufhin in Vorwärts- und dann in Rückwärtsrichtung angelegt, so dass zwei Messungen erhalten werden.

Beide Messwerte werden vom DLRO 10X zusammen mit dem Mittelwert angezeigt; das DLRO 10 zeigt nur den Mittelwert an.

Ist der Gesamtwiderstand der stromführenden Kabel und des Prüfobjekts größer als 100 mΩ, ist Messung mit 10 A nicht möglich. Ein 1,9 mΩ Widerstand wird dann beim nächst niedrigeren Prüfstromniveau (1 A) gemessen und das Ergebnis wird als 1.900 mΩ anstelle von 1.9000 mΩ angezeigt.

WIDERSTAND DER PRÜFKABEL

Für Messung bei 10 A darf der Gesamtwiderstand der stromführenden Kabel 100 mΩ nicht überschreiten. Dies gewährleistet, dass der Spannungsabfall in den Kabeln geringer als 1 Volt ist und ermöglicht Messung bei 10 A auch unter schlechtesten Bedingungen. Wird gewünscht, den Prüfstrom auf nicht mehr als 1 A zu begrenzen, beim DLRO 10 stromführende Kabel mit einem Widerstand von ca. 1Ω verwenden oder beim DLRO 10X als maximalen Prüfstrom 1A im Untermenü "Range" (Bereich) auswählen.

ÜBERHITZUNG

Bei Durchführung schnell wiederholter Messungen mit 10 A und unter Verwendung stromführender Kabel mit einem Gesamtwiderstand von 100 mΩ werden 10 W Wärme in den Kabeln und 30 W im Gerät abgeführt. Bei hohen Umgebungstemperaturen kommt es hierdurch zu interner Überhitzung, auf dem Display wird die Meldung "Hot" (Heiß) angezeigt und die Messung stoppt.

Nach einigen Minuten des Abkühlens können Messungen fortgesetzt werden.

Handelt es sich hierbei um ein häufig auftretendes Problem, sind stromführende Kabel mit einem höheren Widerstand (z.B. 200 mΩ bis 300 mΩ) zu verwenden. Dies verringert die interne Wärmeabgabe.

Batteriemodul und Pflege

DAS BATTERIEMODUL

Im Batteriemodul sind Nickel-Metallhydrid-Zellen verbaut; eine intelligente Schaltung steuert den Ladevorgang und überwacht den Ladezustand. Hierdurch wird eine Batterie hoher Leistung und geringen Gewichts bereitgestellt, die jederzeit wieder aufgeladen werden kann. Die Batterie kann vom Benutzer weder übermäßig stark geladen noch entladen werden. Im Interesse der Bequemlichkeit ist es am besten, die Batterie regelmäßig nachzuladen; andererseits nimmt eine entladene Batterie keinen Schaden.

Auf der Vorderseite des Batteriemoduls befinden sich zwei Tasten und eine LED-Anzeige mit 10 Segmenten.

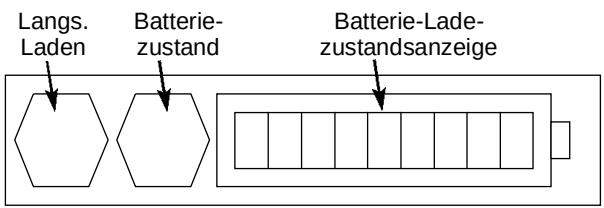

Um den Ladezustand des Batteriemoduls in Erfahrung zu bringen - ob an das DLRO oder davon getrennt - die Taste Batteriezustand drücken. Auf der Batterie-Ladezustandsanzeige leuchten zwischen ein bis zehn Segmente auf, was einen Ladezustand von 10% bis 100% anzeigt. Nach weniger Sekunden verlischt diese Anzeige automatisch.

LADEN DER BATTERIE

Bitte beachten – Die Batterie darf nur geladen werden, wenn die Temperatur zwischen 0°C und 45°C liegt. Schnelles Laden ist unzulässig, wenn die Temperatur unter 10°C liegt. Schnelles Laden führt zu einem Anstieg der Batterietemperatur. Bei Temperaturen über 45°C wird die Laderate automatisch herabgesetzt.

Zum Laden der Batterie muss das Batteriemodul aus dem Gerät ausgebaut werden. Modul ausbauen, indem auf den erhabenen runden Bereich der Halteclips gedrückt wird und die Oberseite der Clips vom Gerätegehäuse weggezogen wird. Das Modul lässt sich jetzt vom Geräteboden abziehen.

Ladegerät einstecken oder an eine 12 V Fahrzeugbatterie mit dem mitgelieferten Kabel mit 'Zigarettenanzünder-Stecker' anschließen. Die LED "Batterie-Ladezustand" leuchtet auf und zeigt den Ladezustand an. Die Batterie muss aufgeladen werden, bevor sie vollkommen entladen ist. Ein Ladezustand von 90% Ladekapazität wird normalerweise innerhalb von 21/2 Stunden erreicht. Volle Aufladung kann bis zu 4 Stunden dauern, in Abhängigkeit vom Entladungszustand der Batterie. Nach Abschluss des Ladevorgangs unterbricht die intelligente Schaltung das Laden, so dass ein Überladen verhindert wird.

Das Batteriemodul kann sicher im teilgeladenen Zustand genutzt werden und nimmt bei Lagerung im entladenen Zustand keinen Schaden. Möglicherweise erscheint es jedoch als wünschenswert, eine Ersatzbatterie auf Lager zu halten, damit das DLRO kontinuierlich genutzt werden kann.

Mit Altern der Batterie kommt es zu einem Kapazitätsverlust. Für diese Fälle ist die Einrichtung für langsames Laden vorgesehen, die aktiviert wird, wenn die Taste Langs. Laden gedrückt wird, während die Versorgung vom Ladegerät eingeschaltet wird, bis die Ladezustandsanzeige Bewegung zeigt. Dieser Ladevorgang kann bis zu 48 Stunden dauern und sollte von daher am Wochenende genutzt werden oder in Situationen, in denen kein Nutzungsbedarf herrscht.

Batteriemodul und Pflege

Eine voll geladene Batterie entlädt sich, selbst bei Nichtbenutzung, innerhalb von mehreren Wochen (schneller bei hohen Temperaturen). Vor Arbeitsbeginn immer die "Batterie-Ladezustandsanzeige" überprüfen. Bei einer voll geladenen Batterie werden alle Segmente angezeigt. Bei einer entladenen Batterie wird kein Segment angezeigt.

Bitte beachten – Die Standzeit aller Batterien wird verkürzt, wenn diese kontinuierlich zu hohen Temperaturen ausgesetzt sind. Eine konstante Temperatur von 30°C führt wahrscheinlich zu einem Batterieausfall in weniger als 5 Jahren. 40°C verkürzen die Standzeit auf 2 Jahre.

DIE BATTERIE-LADEZUSTANDSANZEIGE

Die Batterie-Ladezustandsanzeige informiert über den Ladezustand der Batterie, gibt jedoch wie folgt auch über andere Zustände Auskunft:

Standardladung.

Das Batteriemodul wird mit standardmäßiger Laderate geladen.

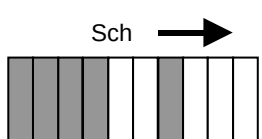

Langsames Laden.

Das Batteriemodul wird mit niedriger Laderate geladen.

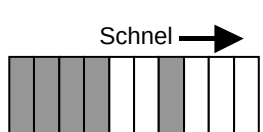

Standardladung bei niedriger Laderate.

Die Batterie sollte mit standardmäßiger Laderate geladen werden, wurde jedoch heiß und hat auf niedrige Laderate umgeschaltet, während die Batterie abkühlt. Auf Absinken der Temperatur warten und/oder die Batterie an einen kühleren Platz bringen.

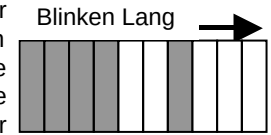

Keine Ladung. Es liegt ein Temperaturproblem vor.

Die Batterie ist zu heiß oder zu kalt und deshalb wurde der Ladevorgang unterbrochen, bis die Batterie wieder eine Temperatur zwischen 0°C und 45°C erreicht.

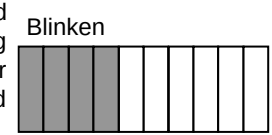

Eingangsspannung zu niedrig.

Das Ladegerät stellt dem Batteriemodul keine ausreichende Spannung für ein Laden der Batterie zur Verfügung.

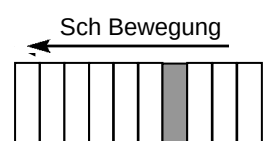

Batterie beinahe entladen.

Die Batteriekapazität ist sehr niedrig. Batterie laden.

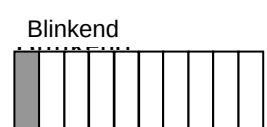

Fehler: Reset

Im Batteriemodul ist eine Störung aufgetreten. Die Schaltung führt eine Rückstellung durch. Etwas warten, und die Störung sollte verschwinden.

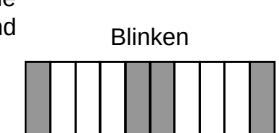

Überspannungsproblem

Die Versorgungsspannung für die

Batteriemodul und Pflege

Batterieladung ist zu hoch. Ladegerät abklemmen und Störung beseitigen.

WARNUNG
Verbindung mit grösser als 15 volts kann bleibenden schaden im batteriemodul verursachen.

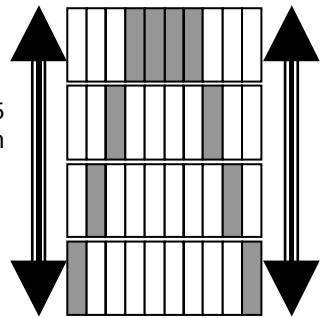

Technische Daten

Bereiche

Volle Grösse	Auflösung	Genauigkeit	Volle Grösse Volt		Testpannung	
			mit Widerstand	induktiv	mit Widerstand	induktiv
1,9999 mΩ	0,1 µΩ	±0,2%±0,2 µΩ	20 mV		10 A	1 A
19,999 mΩ	1 µΩ	±0,2%±2 µΩ	20 mV	20 mV	1 A	1 A
199,99 mΩ	10 µΩ	±0,2%±20 µΩ	20 mV	200 mV	100 mA	1 A
1,9999 Ω	100 µΩ	±0,2%±0,2 mΩ	20 mV	200 mV	10 mA	100 mA
19,999 Ω	1 mΩ	±0,2%±2 mΩ	20 mV	200 mV	1 mA	10 mA
199,99 Ω	10 mΩ	±0,2%±20 mΩ	20 mV	200 mV	100 µA	1 mA
1999,9 Ω	100 mΩ	±0.2%±0.2 Ω	200 mV	200 mV	100 µA	100 µA

		DLRO10	DLRO 10X
Display	Messung	LED, 4 $^1/_2$ Stellen, sieben Segmente	Große LCD-Anzeige mit Hintergrundbeleuchtung
	Bereich und Sicherheit	LED-Anzeige	
Messung	Betriebsart	Normal, Auto, Kontinuierlich, induktiv	Normal, Auto, Kontinuierlich, induktiv, Einseitig
	Steuerung	Vollautomatisch	Vollautomatisch mit Übersteuerung des maximalen Prüfstroms von Hand
	Geschwindigkeit	<3 s für Messung mit Vorwärtsstrom und Rückstrom und Mittelwertanzeige	
Messverfahren		Einzyklische umpolende Gleichstrom-Verhältnismessungen mit Mittelwertsberechnung.	
Prüfstromgenauigkeit		10%	
Ausgangsstrom-Stabilität		<10 ppm pro Sekunde bei 10 mA <100 ppm pro Sekunde bei höheren Strömen	

Technische Daten

		DLRO10	DLRO10X
Höchster Kabelwiderstand		100 mW Gesamt für Betrieb bei 10 A unabhängig vom Batteriezustand.	
Voltmeter-Eingangsimpedanz		> 200 kΩ	
Abweisung bei Brummen		Weniger als 1% ± 20 Stellen Zusatzfehler bei 100 mV Spitze 50/60 Hz auf den Potentialkabeln. Eine Warnmeldung zeigt Überschreiten dieses Niveaus durch Brummen oder Rauschen an.	
Daten	Übertragung		Echtzeit oder aus Speicher über RS232
	Speicherung		700 Messungen
	Memo-Feld		Bis zu 200 Zeichen pro Messung über integrierte alphanumerische Tastatur.
Batterie	Kapazität	7 Ah NiMH, aufladbar.	
	Standzeit	Typisch 1000 Messungen bei 10 A vor Aufladung	
	Aufladen	Über externes 90 V – 260 V 50/60 Hz Ladegerät oder über 12 bis 15 V Gleichstromversorgung	
Ladezeit		2,5 Stunden bis 90% Kapazität, 4 Stunden bis volle Aufladung	
Temperatur	Betrieb	+5°C bis +45°C bei voller Spezifikation. -10°C bis +50°C bei verringerter Genauigkeit.	
	Lagerung	-30°C bis +70°C	
	Kalibrierung	20°C	
	Koeffizient	<0,01% pro ^{O}C von 5°C bis 40°C	
	Standardladung.	0°C bis +45°C	
	Schnelle Ladung	+10°C bis +45°C	
Feuchte	max.	90% relative Luftfeuchte bei 40 ^{O}C, nicht kondensierend	
Meereshöhe	max.	2000 m bei voller sicherheitstechnischer Spezifikation	
Sicherheit		In Übereinstimmung mit EN61010-1 600 V Kategorie III	
EMV		Entspricht IEC61326 inkl. änderung Nr.1	
Abmessungen		220 x 100 x 237 mm	
Gewicht		2.6 kg einschließlich Batteriemodul	

Fehlersuche

Fehlermeldung	Störung	Erforderliche Maßnahme
bAtt	Niedriger Ladezustand des Batteriemoduls.	Batterie laden oder durch eine geladene ersetzen.
_ _ _ _ _	Während der Messung trat ein Fehler auf, es wurde z.B. der Kontakt an einer der Sonden verloren.	Richtigstellen und Messung wiederholen.
ERR 114	Prüfsummenfehler im batteriegestützten NurLesespeicher. Kann auftreten, wenn Batteriemodul und Hilfsbatterie voll entladen sind.	Batterie laden oder durch eine geladene ersetzen. Gerät einschalten. Kalibrierungskonstanten werden aus dem EEPROM aufgerufen.
ERR 115	Prüfsummenfehler im EEPROM. Kalibrierungskonstanten gingen verloren. Das DLRO arbeitet weiter, aber die Genauigkeit liegt jetzt typischerweise bei ± 2%. Beim Einschalten wird auf dem Display die Softwareversion mit beiderseitigen Strichen angezeigt, z.B. - 1.0 -	Für Neukalibration einsenden.

Das DLRO10X kann auf die ursprünglichen Werkseinstellungen rückgesetzt werden. Hierdurch werden alle gespeicherten Messergebnisse gelöscht, die Uhr wird auf einen Vorgabewert und ein vorgabemäßiges Datumsformat gestellt und alle anderen Einstellungen kehren auf ihre Vorgabewerte zurück. Dies wird erreicht, indem die Taste '3' auf der alphanumerischen Tastatur gedrückt gehalten wird, während das Gerät eingeschaltet wird.

Zubehör

Mit dem Gerät mitgeliefertes Standardzubehör

7 Ah NiMH-Batteriemodul		6340-101
DH4 Duplex Handspikes (2), eine mit Anzeigelampen	1,2m / 4 ft	6111-503
Batterieladegerät für Betrieb ab 115/230 V 50/60 Hz-Vesorgung		6280-333
Adapter für Zigarettenanzünder für die Batterieladung		6280-332
Benutzeranleitung		6172-681
Garantieheft		6170-618

Sonderzubehör gegen Aufpreis

Tragetasche für DLRO10 und alles Standardzubehör		6380-138
Tragetasche für Zusatzkabelsätze		18313
Kalibrationsnebenschluß, 10 Ω, Nennstrom 1 mA		249000
Kalibrationsnebenschluß, 1 Ω, Nennstrom 10 mA		249001
Kalibrationsnebenschluß, 100 mΩ, Nennstrom 1A		249002
Kalibrationsnebenschluß, 10 mΩ, Nennstrom 10 A		249003
Kalibrationszertifkat für Nebenschlüsse, NIST		CERT-NIST
Ersatzspitzen für DH4 Handspikes	Nadelspitze	25940-012
	Waffelende	25940-014

Zusatzprüfkabel gegen Aufpreis

Duplex-Kabel

DH5 gerade Duplex-Handspikes (2). Eine mit Anzeigelampen	2,5 m/8 ft	6111-517
Duplex-Handspikes (2) für den Einsatz mit 600 V-Anlagen	2,5 m/8 ft	6111-518
Duplex-Handspikes (2)mit Federwendelkontakten	2 m/7 ft	242011-7
	2,5 m/8 ft	6111-022
	5,5 m/18ft	242011-18
	6 m/20 ft	6111-023
	9 m/30 ft	242011-30

Gerade Duplex-Handspikes (2) schwere Ausführung mit festen Kontakten	2 m/7 ft	242002-7
	5,5 m/18ft	242002-18
	9 m/30 ft	242002-30
Duplex schwere Ausführung 5 cm (2") C-Klemmen (2)	2 m/7 ft	242004-7
	5,5 m/18ft	242004-18
	9 m/30 ft	242004-30
Duplex-Handspikes mit austauschbaren Nadelspitzen	2 m/7 ft	242003-7
Duplex 1,27 cm (½") Kelvinklammern (2) vergoldet	2 m/7 ft	241005-7
versilbert	2 m/7 ft	242005-7
Duplex 3,8 cm (1½") Kelvinklammern (2)	2 m/7 ft	242006-7
	5,5 m/18ft	242006-18
	9 m/30 ft	242006-30

Einzelkabell

Einzel-Handspikes (2) für Potentialmessungen	2 m/7 ft	242021-7
	5,5 m/18ft	242021-18
	9 m/30 ft	242021-30
Stromklammern (2) für Stromanschlüsse	2 m/7 ft	242041-7
	5,5 m/18ft	242041-18
	9 m/30 ft	242041-30

Reparatur und Garantie

Der Stromkreis des Geräts enthält auf statische Ladung empfindliche Komponenten, und die Leiterplatte muß vorsichtig gehandhabt werden. Wenn der Schutz eines Geräts beeinträchtigt wurde, sollte es nicht benutzt werden, und zur Reparatur durch entsprechend ausgebildetes und qualifiziertes Personal eingeschickt werden. Der Schutz kann dann beeinträchtigt sein, wenn das Gerät beispielsweise sichtbar beschädigt ist, die vorgesehenen Messungen nicht ausführt, unter ungünstigen Bedingungen über längere Zeit gelagert wurde oder extremen Transportbeanspruchungen ausgesetzt war.

Neue Gerät haben eine 1-jährige Garantie ab dem Datum des Kaufs durch den Benutzer.

Hinweis: Jede vorherige unberechtigte Reparatur bzw. Anpassung macht die Garantie automatisch ungültig.

Gerätereparatur und Ersatzteile

Wenn Sie Service-Ansprüche für ***DUCTER®***-Geräte haben, wenden Sie sich bitte an:

AVO INTERNATIONAL oder AVO INTERNATIONAL

Archcliffe Road	Valley Forge Corporate Centre
Dover	2621 Van Buren Avenue
Kent, CT17 9EN.	Norristown, PA 19403
England.	U.S.A.
Tel: +44 (0) 1304 502243	Tel: +1 (610) 676-8579
Fax: +44 (0) 1304 207342	Fax: +1 (610) 676-8625

Anerkannte Reparaturbetriebe

Eine Reihe unabhängiger Gerätereparaturbetriebe wurden für die Reparatur der meisten ***DUCTER®***-Geräte anerkannt und verwenden echte ***DUCTER®***-Ersatzteile. Wenden Sie sich für Angaben zu Ersatzteilen, Reparatureinrichtungen und Beratung zum besten Vorgehen an den zuständigen Händler bzw. Vertreter.

Einschicken eines Geräts zur Reparatur

Wenn Sie ein Gerät zur Reparatur an den Hersteller zurückschicken, muß es mit vorausbezahltem Porto an die entsprechende Adresse geschickt werden. Eine Kopie der Rechnung und des Lieferscheins sind gleichzeitig mit Luftpost zu schicken, um die Zollabfertigung zu beschleunigen. Dem Absender wird bei Bedarf vor Aufnahme der Arbeit an dem Gerät ein Reparaturkostenvoranschlag überreicht, der Frachtkosten und andere Kosten aufweist.

NOTE:

Die Batterien sind Nickel-Metall-Hybridzellen. Entsorgen Sie nach einem Batteriewechsel die alten Zellen entsprechend den örtlichen Vorschriften.

Ohmmetro digitale a bassa resistenza

DUCTER DLRO -10

Guida per l'Utente

MEGGER®

Indice

Avvertenze di sicurezza 75
Descrizione generale 76
Funzionamento generale - dlro 10 77
Gli indicatori di intensità del test 77
La spia luminosa del rumore 77
Gli indicatori 'C' e 'P' 77
Gli indicatori di avvertimento 'V' e 'I' 77
Funzionamento generale - DLRO 10X 78
Pannello superiore del DLRO 10X 78
Lo schermo del menu principale del DLRO 10X 78
I messaggi di avvertimento 78
Il rumore 78
Gli indicatori 'C' e 'P' 79
Avvertenza di tensione esterna 79
Avvertenza di intensità di scarica 79
Il sistema dei menu 79
Il menu Test 79
Il Menu Opzioni 79
Ritrova 80
Display 80
Scarica 80
Le bande passanti 81
Regolare l'orologio 81
Cancellare i dati 82
Memorizzare 82
Il menu gamma 82
Inserire le note nello schermo memo 82
Memorizzare i risultati dei test 83
Funzionamento della tastiera 83-84
Le modalita'dei test 85
La modalità normale 85
La modalità automatica 85
La modalità continua 85
La modalità alta potenza 85
La modalità unidirezionale 85
Tecniche dei test e applicazioni 86
Test che usano le doppie punte manuali DH4 87
Test che usano le doppie punte manuali o i cavi individuali. 87
La sequenza dei test 88
La resistenza del cavo del test 88
Il surriscaldamento 88
Il modulo della batteria e la manutenzione 89
Il modulo della batteria 89
Il caricamento della batteria 89
L'indicatore di stato della batteria 90
Caricamento standard. 90
Caricamento lento. 90
Caricamento standard ma ad un ritmo lento. 90
Non si ricarica. C'è un problema di temperatura. 90
Tensione in ingresso troppo bassa. 90
Batteria quasi esaurita 90
Errore: Riazzerate 91
Problema di sovratensione 91
Specificazioni 92-93
La localizzazione dei guasti 94
Accessori 95
Riparazioni e Garanzia 96

Simboli usati sullo strumento:

Attenzione: Fare riferimento alle relative note

Attrezzatura protetta completamente da isolamento doppio o rinforzato (Classe II)

Attrezzatura conforme alle direttive UE in vigore

Avvertenze di sicurezza

- **Queste avvertenze di sicurezza devono essere lette e comprese prima di utilizzare lo strumento.**
- **Quando possibile, i circuiti devono essere disattivati prima di procedere ai test.**

  Se non è possibile disattivare il circuito, (per esempio le batterie ad alta tensione non possono essere disattivate mentre sono sottoposte a test le loro connessioni) l'utente deve essere consapevole dei pericoli. I terminali dello strumento saranno sotto tensione quando connessi al circuito. Si raccomanda perciò di utilizzare una gamma di cavi adeguatamente isolati e calibrati per provvedere l'isolamento ai terminali.

- **Testare i circuiti induttivi può essere rischioso:**
  Dopo avere testato una carica induttiva ci sarà una quantità di energia accumulata nell'induttanza. Questa energia è rilasciata sotto forma di un'intensità di scarica. Interrompere una carica induttiva mentre la corrente continua a passare causerà un arco ad alta tensione, che rappresenta un pericolo sia per l'utente che per l'elemento sottoposto al test.

  Il DLRO10 è dotato di una spia luminosa di **SCARICA,** contrassegnata 'I', che indica che la corrente sta passando nel circuito C1-C2. Questa spia luminosa lampeggerà al termine di un test su una carica induttiva mentre un'intensità di scarica continua a passare e finirà di lampeggiare quando l'intensità è decaduta a meno di 1mA. Il DLRO 10X usa un messaggio sul display a questo scopo.

  Per testare grandi resistenze induttive i cavi che trasportano la corrente devono essere connessi in modo sicuro all'elemento sottoposto al test prima di iniziare la prova.

  E' sconsigliato l'uso delle doppie punte manuali per eseguire i test sui carichi induttivi. Se inavvertitamente si utilizzano le doppie punte manuali DH4 su un carico induttivo, la spia luminosa L1 sulle doppie punte manuali lampeggerà con colore ambrato, mentre circola l'intensità di scarica, duplicando quindi la funzione della spia luminosa 'I' sullo strumento. E' importante mantenere il contatto fin quando la luce L1 termina di lampeggiare con colore ambrato e diventa verde indicando la fine del test.

- **Questo prodotto non è intrinsecamente sicuro. Non utilizzatelo in un'atmosfera esplosiva.**
- **Notate. La cinghia che passa intorno al collo è specificamente progettata per rompersi quando soggetta ad una sollecitazione di circa 50 kg.**

Descrizione generale

Il DUCTER DLRO 10 ed il DUCTER DLRO 10X costituiscono una famiglia di misuratori di ohm a bassa resistenza che misurano le resistenze nella gamma compresa tra 0.1 µΩ e 2kΩ. Entrambi gli strumenti provvedono una corrente massima del test di 10 Amp a corrente continua che è automaticamente selezionata in funzione del valore della resistenza che è testata. Il DLRO10X vi permette di ignorare questa selezione automatica e di scegliere l'intensità del vostro test.

Il valore misurato della resistenza è trasferito sul display dello strumento con l'indicazione delle unità, µΩ, mΩ o Ω. Il DLRO 10 usa un grande display a LED e indicatori per mostrare il valore e le unità rispettivamente, mentre il DLRO 10X contiene tutte le informazioni su un chiaro display LCD (visualizzatore a cristalli liquidi) retroilluminato.

L'utilizzo di una tecnica di misurazione a quattro terminali rimuove la resistenza dei cavi dei test dal valore misurato e l'inversione automatica di corrente elimina l'effetto di tensioni permanenti da una parte all'altra del campione del test. Inoltre, prima e durante un test, il contatto del cavo del test è monitorato per ridurre ulteriormente la possibilità di letture erronee.

Una misura di resistenza dura circa 2.5 secondi e comprende una misurazione con corrente diretta, corrente inversa ed un display della media. Sul DLRO 10X sono mostrati tutti e tre i valori, e facoltativamente, la misura può essere limitata solo alla corrente diretta.

Lo strumento è alimentato da una batteria Nickel Metallo Idruro (NiMH) ricaricabile, che permette di completare mille test di 10 Amp con una singola carica. Il modulo della batteria contiene una circuiteria intelligente, che previene i danni alla batteria da sovraccaricamento, ed un indicatore dello stato della batteria

Un coperchio rimovibile che è munito di cardini sul retro e mantenuto chiuso tramite ganci magnetici, copre il pannello superiore. Questo coperchio può essere rimosso se desiderato aprendolo completamente e facendolo uscire dalle sue cerniere.

Entrambi gli strumenti sono protetti contro la connessione accidentale a tensioni esterne fino a 600 V a corrente continua applicate tra ciascun paio dei quattro terminali per massimo 10 secondi. Notate che applicare 600 V ai terminali potenziali causerà un riscaldamento interno. Aspettatevi errori fino a 30 cifre immediatamente dopo l'applicazione di tale tensione. La completa precisione sarà ristabilita entro due, tre minuti.

Entrambi gli strumenti sono dotati di un paio di doppie punte manuali DH4 con cavi di 1.2 m. Sono disponibili altre lunghezze e terminazioni se desiderato.

Funzionamento generale - DLRO 10X

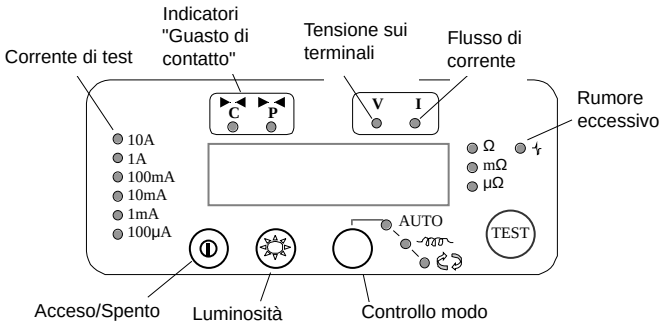

Premete l'interruttore On/Off per accendere il DLRO 10. Si accenderanno tutte le spie luminose, le spie V e I lampeggeranno, sarà mostrata la versione del software e la spia W si illuminerà. Se i cavi del test non sono stati collegati al campione del test si accenderanno anche le spie luminose 'C' e 'P'. Premete di nuovo il pulsante On/Off per spegnere lo strumento. Se lo strumento non viene usato per 5 minuti si spegnerà automaticamente.

Regolate il controllo della luminosità fino ad un livello soddisfacente.

Selezionate la modalità del Test premendo il pulsante Mode (Modalità) ripetutamente. Le spie luminose dell'indicatore percorreranno successivamente le diverse modalità dei Test (vedere la sezione sulle modalità dei Test). Premete il pulsante Test per avviare un test.

Gli indicatori di intensità del test

L'intensità del test è selezionata automaticamente dal DLRO 10 ed è indicata dalle spie luminose sulla sinistra del pannello. Il valore misurato è mostrato nella finestra principale e le unità (µΩ, mΩ or Ω) sono mostrate dalle spie luminose alla destra della finestra.

La spia luminosa del rumore

Il rumore superiore a 100 mV 50/60 Hz accenderà la spia luminosa 'Noise' (rumore) e la precisione della misura non può essere affidabile.

Gli indicatori 'C' e 'P'

La spia luminosa 'C' si illumina per indicare un errore del contatto nel circuito 'C1-C2'. La spia luminosa 'P' si illumina quando c'è un'interruzione P1-P2.

Gli indicatori di avvertimento 'V' e 'I'

Se la tensione esterna è applicata ai terminali la spia luminosa 'V' lampeggerà. Questo è un avvertimento che l'elemento sottoposto a test è sottotensione e potrebbe essere pericoloso. Un test non può essere eseguito in questa condizione.

La spia luminosa 'V' si illuminerà se più di 50 V. sono applicate tra uno dei terminali di tensione ed il terminale di intensità. Se la tensione si manifesta soltanto tra i terminali di tensione o i terminali di intensità la spia luminosa si accenderà ad un picco di 100 V o ad un picco di 5 V rispettivamente.

Notate – La spia luminosa 'V' indicherà solo se si manifesta una tensione tra i terminali. La spia luminosa non funzionerà se tutti i terminali sono alla stessa alta tensione. La spia luinosa non funzionerà se lo strumento è spento.

La spia luminosa 'I' si illuminerà se un'intensità maggiore di 1 mA continua a circolare dopo che un test è completato. Questo suggerisce che una carica induttiva è stata testata e si sta ancora scaricando. Non disconnettete il circuito di corrente fin quando la spia luminosa 'I' non si spegne.

Funzionamento generale - DLRO 10X

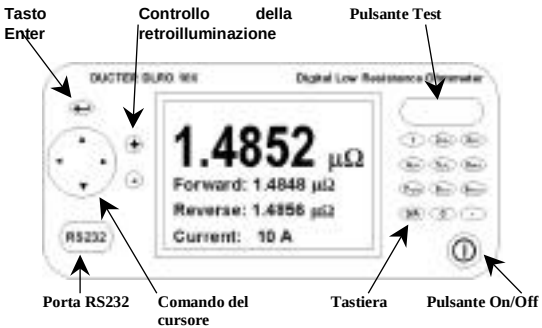

Pannello superiore del DLRO 10X

Tutti i comandi necessari per regolare e far funzionare il DLRO 10X sono situati sul pannello superiore dello strumento.

Alla sinistra del largo display a LCD ci sono i comandi per spostarsi sul display, per controllare il sistema dei menu e per aggiustare il contrasto del display e la retroilluminazione.

Alla destra del display ci sono il grande pulsante Test, Il pulsante On/Off ed una tastiera alfanumerica per inserire le note relative ad un test che sarà memorizzato con i risultati del test per un riferimento successivo.

Per accendere il vostro DLRO 10X, premete il pulsante On/Off per circa 1 secondo. Premete di nuovo per spegnere lo strumento. Se lo strumento non viene usato per 5 minuti si spegnerà automaticamente.

Lo schermo del menu principale del DLRO 10X

Quando acceso per la prima volta il DLRO 10X mostra uno schermo di copyright, seguito dallo schermo del Menu principale.

Questo schermo vi fornisce informazioni come la percentuale di carica rimanente della batteria, il numero di indice del prossimo test, il numero dei test già memorizzati e la data e l'orario correnti.

Questo schermo da anche accesso al sistema di menu tramite il quale regolate il vostro strumento e scegliete i parametri del test desiderati. La navigazione in questo sistema di menu è possibile per mezzo del comando del cursore e del tasto Enter.

```
TEST      OPZIONI    GAMMA
NORM
                      10A


            70%
     TEST SUCCESSIVO 1
      0    MEMORIZZATO

       27/07/00 12.02
```

I messaggi di avvertimento

Lo schermo del Menu principale conterrà di tanto in tanto anche certi messaggi di avvertimento.

Il rumore

Il rumore superiore a 100 mV 50/60 Hz attiverà il messaggio 'Noise' alla base del display. Sopra questo livello la precisione non può essere affidabile.

Funzionamento generale - DLRO 10X

Gli indicatori 'C' e 'P'

Una buona misura richiede che sia il circuito che trasporta la corrente che il circuito di scoperta della tensione siano completati dall'elemento sottoposto a test. Il DLRO 10X verifica questa continuità. Se c'è una continuità scadente in uno dei due circuiti apparirà un messaggio alla base del display. Questo indicherà "P OPEN CIRCUIT" se i contatti della tensione sono ad alta resistenza, "C OPEN CIRCUIT" se il circuito di corrente non è chiuso o "CP OPEN CIRCUIT" se entrambi i circuiti sono inadeguati. Verificate i contatti, poichè non può essere realizzata la misura se uno di questi messaggi è visibile sul display.

Avvertenza di tensione esterna

Se una tensione esterna è applicata ai terminali, lampeggerà sul display un messaggio "EXT VOLTS". Questo è un avvertimento che l'elemento sottoposto a test è sotto tensione e potrebbe essere pericoloso. Un test non può essere realizzato in questa condizione.

Il messaggio "EXT VOLTS" lampeggerà se più di 50 V. sono applicate tra uno dei terminali di tensione ed un terminale di intensità. Se la tensione si manifesta soltanto tra i terminali di tensione o i terminali di intensità il messaggio apparirà ad un picco di 100 V o ad un picco di 5 V rispettivamente.

Notate – Il messaggio apparirà solo se esiste una tensione TRA i terminali. Il messaggio non apparirà se tutti i terminali sono alla stessa alta tensione. Il messaggio non funzionerà se lo strumento è spento.

Avvertenza di intensità di scarica

Un messaggio CURRENT FLOW apparirà se una intensità superiore a 1 mA continua a circolare dopo che un test è completato. Questo indica che una carica induttiva è stata testata e si sta ancora scaricando. Non sconnettete il circuito di corrente mentre è mostrata l'avvertenza di scarica.

Il sistema dei menu

Usate le frecce Sinistra e Destra del comando del cursore per mettere in risalto il menu richiesto. Premete il comando del cursore Down per vedere le opzioni disponibili su quel menu. Selezionate l'opzione desiderata usando il comando del cursore e premete Enter per programmare quella opzione. In base all'elemento del menu selezionato, il display mostrerà ulteriori opzioni o ritornerà allo schermo del menu principale.

Il menu Test

Questo sottomenu seleziona la modalità del test. Può essere attivata solo una modalità alla volta e la modalità attivata è mostrata sotto l'intestazione TEST. (Vedere le modalità Test più avanti in questo manuale per i dettagli su ogni modalità.)

Il Menu Opzioni

Il menu Opzioni ha cinque alternative non collegate tra loro.

Funzionamento generale - DLRO 10X

Ritrova

Permette di richiamare i risultati memorizzati sul display o su un PC.

Display

Richiama ogni test, in sequenza, sul display dello

```
       NUMERO DEL TEST 2
       GG MM AA OO MM
         09/10/00 12:24
TEST NORMALE
MEDIA          12.6 µΩ
DIRETTA        14.0 µΩ
INVERSA        11.2 µΩ
CORRENTE       10 A

RISULTATI            MEMO
```

strumento a cominciare dal risultato memorizzato più recentemente.

Utilizzate i comandi del cursore Sopra e Sotto per passare rispettivamente ai risultati memorizzati più recentemente o più nel passato. In alternativa, se conoscete il numero dell'indice del test che desiderate visualizzare, digitate il numero sulla tastiera e premete Enter.

Un asterisco vicino (*) alla parola "MEMO" vuol dire che ci sono note allegate a questo risultato. Premete il comando destro del cursore per vedere le note.

Scarica

Provoca l'uscita di tutto il contenuto della memoria dei dati sulla porta RS232 sulla sinistra del display. E' fornita una copia dell'AVO Download Manager, che facilita lo scaricamento e formatta i dati.

Io scaricamento dei dati non provoca la cancellazione dei dati memorizzati dalla memoria. Per cancellare i dati dalla memoria vedere "Cancellare i dati" sotto.

Notate – Il DLRO 10X rende anche i dati disponibili tramite la porta RS232 in tempo reale ed è adatto per la stampa su una stampante seriale autonoma.

Il risultato si presenta come segue:

NUMERO DEL TEST

TIPO DEL TEST

GG MM AA OO MM

01/01/00 00:33

RESISTENZA DIRETTA

RESISTENZA INVERSA

RESISTENZA MEDIA

CORRENTE SELEZIONATA

LIMITE SUPERIORE

LIMITE INFERIORE

SUCCESSO

Le ultime tre linee appariranno solo se sono state programmate le bande passanti

Funzionamento generale - DLRO 10X

Le bande passanti

Questa opzione vi permette di regolare i limiti superiore ed inferiore tra cui la media dei risultati dei test deve cadere se deve essere segnalata come un Successo (un tono lungo dal segnalatore acustico). Le letture esterne a questi limiti saranno segnalate come un Insuccesso (un tono breve dal segnalatore acustico).

I valori sono inseriti tramite la tastiera che include la virgola per i decimale, dove applicabile, e che comprende m o m (Vedere sezione sulla Tastiera Alfanumerica). Non è necessario inserire il simbolo Ω. Il limite superiore deve essere minore o uguale a 2000.0 Ω ed il limite inferiore deve essere minore di quello superiore.

Dopo aver completato il limite superiore premete Enter. Il DLRO 10X verificherà che siano stati inseriti i numeri validi e si sposterà verso il limite inferiore. Completate questo limite e premete Enter. Il DLRO 10X verificherà che siano stati inseriti numeri validi e mostrerà l'opzione ATTIVA o DISATTIVA le bande passanti.

Mettete in rilievo la vostra scelta e premete Enter. Ritornate allo schermo del Menu principale.

Note: Le bande passanti rimarranno attive o disattive fin quando non entrate in questo schermo e cambiate la selezione. Se avete bisogno di cambiare solo le Bande passanti da ATTIVA a DISATTIVA o viceversa, entrate nello schermo PASSBAND (BANDA PASSANTE) e premete Enter fin quando è mostrata la scelta ATTIVA / DISATTIVA, momento in cui potete cambiare la selezione.

Regolare l'orologio

Questa opzione regola la data e l'ora dell'orologio in tempo reale come pure il formato della data. Quando entrate in questo schermo saranno mostrati la data corrente, l'orario ed il formato della data.

Usate le frecce Sopra e Sotto del comando del cursore per aggiustare la data evidenziata. Passate all'elemento successivo usando la freccia Destra del comando del cursore.

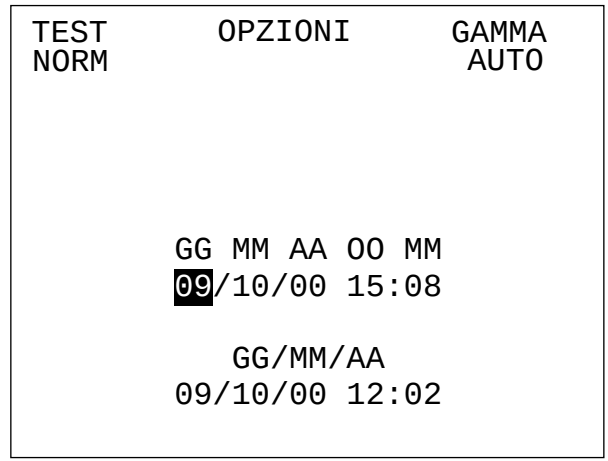

La fila sotto GG MM AAOO MM contiene rispettivamente la data, il mese, l'anno a due cifre, l'ora del giorno nella notazione a 24-ore e i minuti. Questi dati devono essere inseriti in questa sequenza senza tener conto del formato della data che desiderate usare.

La fila sotto GG MM AAOO MM contiene rispettivamente la data, il mese, l'anno a due cifre, l'ora del giorno nella notazione a 24-ore e i minuti. Questi dati devono essere inseriti in questa sequenza senza tener conto del formato della data che

Funzionamento generale - DLRO 10X

desiderate usare.

Il GG/MM/AA inferiore mostra il formato corrente della data. Premere la freccia Sopra del comando del cursore farà girare il carosello delle opzioni disponibili GG/MM/AA, MM/GG/AA o AA/MM/GG.

La linea dei pulsanti mostra il formato corrente della data e l'orario. Questo è aggiornato quando premete Enter per uscire dalla funzione Regolare l'orologio. Comunque, i test già memorizzati prima di cambiare il formato della data conserveranno il vecchio formato.

Cancellare i dati

Selezionate **Cancellare i dati** se desiderate liberare la memoria del DLRO 10X dai dati memorizzati. Nel caso abbiate selezionato questa opzione accidentalmente vi sarà chiesto di confermare se volete cancellare i dati; il default è NO. Cambiatelo in SI e premete Enter se desiderate cancellare tutti i dati.

Notate – TUTTI i dati memorizzati saranno cancellati.

Memorizzare

L'opzione **Memorizzare** programma il default per la memorizzazione dei dati. Può essere programmata a memorizza sempre i dati o non memorizzare mai i dati. Selezionate l'opzione desiderata alla base dello schermo e premete Enter.

Fatta eccezione per i test eseguiti in modalità Continua, al termine di ogni test avrete la possibilità di cambiare il default selezionando MEMORIZZA o NON MEMORIZZARE alla base dello schermo dei risultati.

Al termine di un test, se la memoria è piena questo messaggio MEMORIZZA / NON MEMORIZZARE cambierà in MEMORIA PIENA e nessun altro test sarà memorizzato.

I dati sono memorizzati indefinitivamente se è installato un pacco di batterie cariche. Se la batteria principale si esaurisce o è rimossa, i dati si conservano per un periodo di 4 giorni tramite una batteria di riserva interna. Quando viene reinstallato un pacco di batterie cariche, la batteria di riserva si ricaricherà fino alla capacità totale entro 1 settimana.

Il menu gamma

Il DLRO 10X usa un'intensità del test compresa tra 100 mA e 10A per misurare la resistenza dell'elemento sottoposto alla prova. Se programmato a AUTO, il DLRO 10X selezionerà l'intensità in base alla resistenza che misura. (vedere Specificazioni, Gamme)

Comunque, in alcuni casi può essere consigliabile programmare una massima intensità di test. In questo caso, spostate il cursore fino all'intensità desiderata e premete Enter.

Sono disponibili sei intensità di test; 10A, 1A, 100mA, 10 mA, 1mA e 100 µA. Selezionare 10A come massimo avrà lo stesso effetto che selezionare AUTO.

Lo schermo del Menu principale mostrerà la gamma dell'intensità attiva al di sotto dell'intestazione RANGE (GAMMA).

INSERIRE LE NOTE NELLO SCHERMO MEMO

Al termine di ogni test, (fatta eccezione per i test in modalità Continua), potete selezionare l'opzione MEMORIZZA o NON MEMORIZZARE per memorizzare o meno i risultati dei test. Selezionate l'opzione desiderata usando il comando del cursore. Questa si sovrappone all'impostazione di default in Opzioni,

Funzionamento generale - DLRO 10X

Memorizza per un solo test.

Se desiderate aggiungere dei commenti ai risultati dei test, invece di premere Enter, premete brevemente uno dei dodici tasti sulla tastiera. Inserirete uno schermo memo che vi permette di inserire fino a 256 caratteri di informazioni alfanumeriche riguardanti il test. Dopo aver inserito tutte le informazioni, premete Enter e la misura ed il memo saranno memorizzati sia che sia stato selezionato MEMORIZZA o che sia stato selezionato NON MEMORIZZARE.

Se non desiderate aggiungere note e siete soddisfatti di accettare l'impostazione di default MEMORIZZA / NON MEMORIZZARE potete premere il pulsante Test e sarà iniziato un nuovo test.

MEMORIZZARE I RISULTATI DEI TEST

Ogni test è numerato, a partire dal test 1. Questo numero di test si incrementa automaticamente, appena ogni risultato è memorizzato. La memoria per i risultati dei test può memorizzare un massimo di 170 test, ognuno identificato dal suo numero di test, la data e l'orario. Quando la memoria è piena, il numero del test ripartirà da 1 ed i risultati dei test più vecchi saranno sostituiti.

E' consigliabile salvare tutti i dati su un PC e poi cancellare tutti i dati prima che il numero dei test raggiunge questo massimo. Cancellare i dati farà ripartire il numero dei test da 1. Questo eviterà la perdita dei dati e di fare confusione quando si richiamano i risultati sul display. Se trascurate di farlo saranno applicate le seguenti regole:

Avvertenza: Se il modulo della batteria principale si esaurisce completamente durante un test, il numero del test sarà cambiato in numero del test 1. Per evitarlo, ricaricate la batteria prima che scende sotto al 10% della carica totale.

FUNZIONAMENTO DELLA TASTIERA

La tastiera a 12 tasti è simile a quelle usate sui telefoni cellulari in cui ogni tasto è capace di riprodurre uno dei tanti caratteri in funzione del numero di volte che il tasto è premuto.

La tastiera è usata per inserire i dati nel campo Memo.

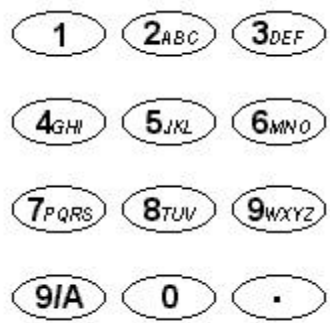

Premendo il tasto blu marcato 9/A si cambia la funzione della tastiera dalla modalità alfabetica a quella numerica.

Nella modalità alfabetica una barra verticale lampeggiante a tutta altezza (|) indica il cursore. I tasti da 2 a 9 riprodurranno la lettera mostrata sui tasti in funzione del numero di volte che viene premuto. Per esempio se si preme una volta il tasto 2 apparirà una 'A' , se si preme due volte apparirà una 'B' , ecc.

Il tasto 0 riproduce uno spazio.

Il tasto 1 cancella il carattere precedente.

Nella modalità numerica una barra lampeggiante a mezza altezza (') indica il cursore. I tasti marcati 1 - 9 e lo 0 riproducono, quando premuti, quel numero. Premete il rispettivo tasto

Funzionamento generale - DLRO 10X

brevemente per inserire il numero desiderato. Una pausa farà spostare il cursore sul carattere successivo. Se un tasto è tenuto premuto si autoripeterà.

Il tasto all'angolo destro inferiore della tastiera marcato con un punto è un tasto speciale che riproduce 20 simboli speciali. Ogni volta che viene premuto riprodurà in sequenza il carattere mostrato a fianco: -

.	Virgola o punto
Ω	Simbolo Ohm
m	m minuscola (abbreviazione per milli)
µ	Simbolo per micro
#	Simbolo conosciuto come hash e comunemente usato come abbreviazione per "numero"
%	Segno di percentuale
(	Parentesi aperta
)	Parentesi chiusa
-	Trattino, lineetta o segno meno
/	Slash
:	Doppio punto
@	Simbolo "at" (chiocciola);
√	Segno di spunta
!	Punto esclamativo
?	Punto interrogativo
$	Simbolo "Dollaro"
=	Segno di "Uguale"
<	Simbolo "Minore di"
>	Simbolo "Maggiore di"
*	Asterisco

Modalità di test

LE MODALITA' DEI TEST

Il DLRO 10 ha cinque modalità dei test che sono selezionate premendo ripetutamente il pulsante Mode (Modalità). Al termine di ogni test, il DLRO 10 mostrerà la media dei valori ottenuti con la corrente diretta ed inversa.

Il DLRO 10X ha sei modalità. Sul DLRO 10X queste modalità sono selezionate a partire dal menu TEST usando il comando del cursore ed il tasto Enter. Al termine di un test, il DLRO 10X mostrerà tre valori della resistenza; quello ottenuto con la corrente diretta, quello ottenuto con la corrente inversa e il valore medio.

La modalità normale

La modalità normale fa una misurazione singola della resistenza del campione usando la corrente diretta ed inversa.

Notate che in questa modalità entrambi i cavi della corrente e della tensione devono essere connessi al campione del test prima di premere il pulsante Test. Per fare un'altra misura, assicuratevi che i cavi di prova sono connesi e premete il pulsante test.

La modalità automatica

Se è selezionata la modalità automatica, il vostro strumento resterà pronto in attesa che sia i cavi di misura della corrente CHE quelli di tensione siano connessi al pezzo da testare. Quando questo è fatto, inizierà automaticamente un test a corrente diretta e a corrente inversa.

Per fare un'altra misura interrompete semplicemente il contatto con il campione del test e rifate il contatto.

Per esempio, se misurate le giunzioni in una lunga sbarra collettrice, potete lasciare il circuito di corrente collegato alle estremità opposte della sbarra collettrice. Mettere in contatto le sonde di tensione con la giunzione(i) che desiderate misurare attiverà semplicemente poi la misurazione.

La modalità continua

La modalità continua richiede che le connessioni siano fatte prima di premere il pulsante Test. Il vostro strumento quindi ripeterà le sue misure dirette ed inverse e mostrerà i risultati approssimativamente ogni 3 secondi fino a quando il contatto è interrotto o il pulsante Test premuto.

Modalità induttiva

DLRO10 e DLRO10X sono in grado di effettuare misurazioni resistive della c.c. su carichi che presentano componenti induttivi. A tal fine, utilizzano la modalità di prova indicata dal simbolo dell'induttore sul DLRO10 o la modalità induttiva sul DLRO10X.

Quando si misurano carichi induttivi, é tassativo fissare opportunamente i fili attraversati dalla corrente all'apparecchio da controllare e non staccarli prima che l'eventuale carico accumulato si scarichi alla fine della prova. L'inosservanza di queste istruzioni può provocare la formazione di un arco elettrico, con conseguenti rischi per lo strumento e l'operatore.

Una volta inserita la modalità induttiva, collegare i quattro fili all'apparecchio da controllare e premere il pulsante Prova.

DLRO provvede a verificare che tutti i quattro fili siano perfettamente a contatto con l'apparecchio di prova, poi eroga la corrente e trova i limiti previsti. Appare sul display 1 - - seguito da 1 - - - -. Durante questa fase, può darsi che si osservi l'aumento o la diminuzione dei valori limite di corrente. Sul DLRO10, lampeggia la spia ÔIÕ, mentre sul DLR101X appare il

Modalità di test

messaggio “Corrente in erogazione”.

Dopo un breve periodo di tempo, appaiono sul display i valori relativi alla resistenza, che scenderanno temporaneamente fino a quando si stabilizzano.

Il tempo impiegato per ottenere un valore stabile può variare da qualche secondo a diversi minuti, in funzione dell’induttanza e della resistenza del campione di prova. Non esiste un limite per il controllo del valore d’induttanza, che continuerà fino a quando l’operatore provvede a premere il pulsante Prova.

Alla conclusione della prova, la spia ‘I’ rimane accesa sul DLRO10, mentre sul DLR101X appare sul display il messaggio “In scaricamento” fino a quando l’energia eventualmente accumulata viene scaricata completamente. L’operatore può procedere a staccare i cavi i fili “C” solo quando questi messaggi saranno scomparsi dal display.

Si fa però presente che l’indicatore di scarica è un dispositivo elettronico e, come tale, non è completamente affidabile. Si consiglia quindi di osservare le procedure di antinfortunistica adottate in sede.

All fine della prova, entrambi gli strumenti visualizzano sul display ma resistenza misurata; sul DLRO10 lampeggerà la rispettiva spia di corrente, mentre il DLRO10X visualizzerà sul display la corrente di prova usata.

Avvertenza: Nella modalità di funzionamento induttiva, la corrente di prova da 10 A non viene utilizzata.

Modalitˆ unidirezionale

Solo sul DLRO 10X, questa modalità effettua la misurazione come nella modalitˆ Automatica, ma utilizza solo una direzione di corrente.

É possibile ripetere la prova interrompendo il contatto e riapplicando i puntali di prova o premendo il pulsante Prova

Tecniche dei test e applicazioni

TEST CHE USANO LE DOPPIE PUNTE MANUALI DH4

Ogni punta manuale è contrassegnata dalla lettera P. Questa indica i terminali potenziali. Questi dovrebbero essere i contatti 'interni' durante l'esecuzione di una misura (come mostrato nella sezione successiva 'Test che usano le doppie punte manuali o i cavi individuali').

Una delle due punte manuali DH4 è dotata di due spie luminose contrassegnate L1 ed L2 e di un cavo supplementare. Questo cavo dovrebbe essere collegato con la presa di corrente a 4 mm vicina ai terminali principali sul lato destro dello strumento. Queste spie luminose forniscono informazioni all'operatore, che sarebbero altrimenti disponibili solo sul display dello strumento. Il significato di queste spie luminose è descritto sotto.

Per esempio, usando le doppie punte manuali DH4 con il DLRO 10 in modalità di test AUTO:

1. Premete il pulsante TEST sullo strumento.
2. La spia luminosa L1 si accenderà con una luce rossa continua per indicare il fallimento del contatto. Vedere il pannello dello strumento per dettagli se necessario.
3. Quando tutti e quattro i contatti saranno collegati, la L1 si spegnerà.
4. Nessuna spia luminosa si accenderà durante il test a meno di difetti di contatto.
5. La spia luminosa L2 si illuminerà con una luce verde continua quando l'intensità di corrente è scesa a meno di 1 mA per segnalare la fine del test.
6. La rimozione delle sonde farà spegnere la spia verde L2 (fine del test) e farà accendere quella rossa L1 (nessun contatto).

Poichè il vostro DLRO garantisce sempre un buon contatto prima di applicare l'intensità di test totale, non ci sarà 'schizzo' a corrodere le punte del contatto. Comunque, dovessero le punte diventare consunte o spuntate, possono essere semplicemente sostituite tirando le punte logore e e inserendone delle nuove.

Il DLRO 10 ed il DLRO 10X (nessuna banda passante)		
Spia L1	**Spia L2**	**Significato**
Rossa	Spenta	Collegamento inadeguato ai contatti C e/o P
Rosso lampeggiante	Spenta	Tensione presente tra i contatti
Spenta	Verde	Corrente inferiore ad 1 mAe test completo.
SOLO IL DLRO 10X Se sono impostate le bande passanti		
Spenta	Verde	Successo della misura
Spenta	Rossa	Insuccesso della misura

TEST CHE USANO LE DOPPIE PUNTE MANUALI O I CAVI INDIVIDUALI.

Connettete i quattro cavi come mostrato.

Se si usano le doppie punte manuali assicuratevi che la sonda contrassegnata P è dentro le sonde C.

Tecniche dei test e applicazioni

LA SEQUENZA DEI TEST

Premendo il pulsante TEST si avvia la sequenza dei test.

La resistenza del contatto è verificata dal passaggio di 100 mA attraverso il circuito C1-C2 e controllando che la tensione è inferiore a 4 V. Poi facendo passare 80 µA attraverso il circuito P1-P2 e verificando che la tensione è inferiore a 250 mV. Se uno dei due valori è troppo alto, sarà mostrata la rispettiva spia luminosa o il messaggio di avvertimento.

Quando tutti i difetti sono stati rettificati l'intensità del test è incrementata fin quando la tensione su P1-P2 è compresa nella gamma 2 mV - 20 mV. Questa corrente è quindi applicata in una direzione diretta e poi inversa per ricavare due misure.

Entrambe le misure sono mostrate dal DLRO 10X insieme alla media, mentre il DLRO 10 visualizza solo la media.

Se la resistenza combinata dei cavi di corrente e del campione del test è maggiore di 100 mΩ, la prova a 10 A non sarà possibile. Sarà poi testato un resistore da 1.9 mΩ all'intensità immediatamente inferiore (1 A) ed il risultato sarà mostrato come 1.900 mΩ invece di 1.9000 mΩ.

LA RESISTENZA DEL CAVO DEL TEST

Per testare a 10 A, la resistenza combinata dei cavi di corrente non deve essere superiore a 100 mΩ. Questo assicurerà che la caduta di tensione nei cavi è minore di 1 volt e permetterà la prova a 10 A nelle condizioni più sfavorevoli. Se desiderate limitare l'intensità del test a non più di 1 A, sul DLRO 10 usate i cavi di corrente con una resistenza di circa 1Ω, o sul DLRO 10X selezionate 1 A come massima intensità di prova nel sottomenu RANGE .

IL SURRISCALDAMENTO

Quando si realizzeranno rapidamente ripetuti test a 10 A, usando cavi di corrente con una resistenza combinata di 100 mΩ, si dissiperanno 10 W di calore nei cavi e 30 W all'interno dello strumento. Se la temperatura dell'ambiente è alta questo provocherà un surriscaldamento interno e apparirà il messaggio "hot" (caldo) sul display dello strumento ed i test saranno sospesi.

Dopo pochi minuti di raffreddamento, i test potranno riprendere.

Se questo problema persiste, usate i cavi di corrente con una resistenza più alta (per esempio tra 200 mΩ e 300 mΩ). Questo ridurrà la generazione di calore interno.

Il modulo della batterie e la manutenzione

IL MODULO DELLA BATTERIA

Il modulo della batteria contiene celle a Nichel-metallo-idruro e ha incorporato un sistema di gestione della batteria che controlla il caricamento e lo scaricamento. Questo fornisce un sistema di batterie leggere e con un'alta capacità, che può essere ricaricato in ogni momento. Non è possibile per l'utente sovraccaricare o sovrascaricare la batteria. Per la vostra convenienza è meglio caricarla regolarmente per mantenerla piena, ma lasciarla in uno stato scarico non la danneggerà.

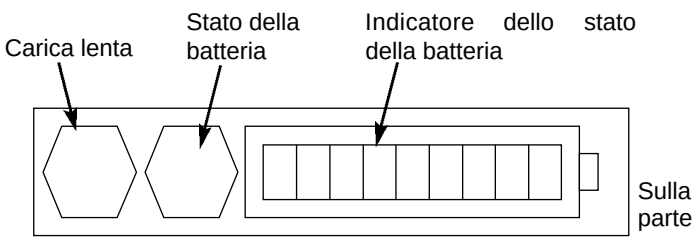

Sulla parte anteriore del modulo della batteria ci sono due pulsanti ed un display LED a 10 segmenti.

Per sapere la quantità di carica nel vostro modulo della batteria, se connesso o separato dal vostro DLRO, premete il pulsante Stato della batteria. L'indicatore dello stato della batteria si illuminerà tra 1 e 10 segmenti che significa, rispettivamente, una carica tra 10% e 100%. Dopo pochi secondi questo display si spegnerà automaticamente.

IL CARICAMENTO DELLA BATTERIA

Notate – La batteria deve essere caricata solo ad una temperatura compresa tra 0°C e 45°C. Il caricamento rapido non sarà consentito se la temperatura è inferiore a 10°C. Il caricamento rapido provoca un innalzamento della temperatura della batteria. Se la temperatura supera 45°C la velocità di caricamento sarà automaticamente ridotta.

Per caricare la batteria, il vostro modulo della batteria deve essere rimosso dallo strumento. Smontate il modulo premendo sull'area circolare rialzata delle clip di ritenuta e tirate via la parte superiore della clip dal corpo dello strumento. Il modulo ora è staccato dalla base dello strumento.

Inserite la spina nel caricatore o collegate ad una batteria a 12 volt tipo veicolo usando il cavo dell'accendino fornito. L'indicatore LED dello "Stato della batteria" si illuminerà e si presenterà in movimento mentre la batteria si sta caricando. La batteria può essere ricaricata prima che si sia scaricata completamente. Sarà normalmente ricaricata al 90% della capacità entro 2 ore e 1/2. Il caricamento totale può prendere fino a 4 ore prima di indicare che la batteria è piena, in funzione dello stato iniziale della batteria. Quando il caricamento è completo la circuiteria di gestione della batteria si spegnerà in modo da prevenirne il sovraccaricamento.

Il vostro modulo della batteria può essere usato in modo sicuro in uno stato di caricamento parziale e non soffrirà se immagazzinato allo stato scarico. Comunque, potreste desiderare di avere una batteria di riserva che può essere alternata con quella in uso per consentire l'uso continuo del vostro DLRO

Quando la batteria invecchia, può cominciare a perdere la sua capacità. In questo caso il modulo della batteria ha una funzione di caricamento lenta che è attivata premendo il pulsante Caricamento lento mentre si mette il caricatore sotto tensione finchè le barre dell'indicatore iniziano a muoversi. Questo metodo di ricarica può prendere fino a 48 ore e così è meglio riservarlo per un fine settimana o un periodo in cui lo strumento non deve essere utilizzato.

Il modulo della batterie e la manutenzione

Una batteria completamente carica, anche se non usata, si autoscaricherà in un periodo di molte settimane (più rapidamente a temperature più elevate). Verificate sempre l'indicatore di "Stato della batteria" prima di iniziare a lavorare. In una batteria completamente carica si illumineranno tutti i segmenti. In una batteria completamente scarica non si illuminerà nessun segmento.

Notate che tutte le batterie hanno una durata ridotta se esposte costantemente ad alte temperature. Una temperatura costante di 30°C provocherà probabilmente il deterioramento della batteria in meno di 5 anni. 40°C ridurranno la sua vita a 2 anni.

L'INDICATORE DI STATO DELLA BATTERIA

L'indicatore di stato della batteria fornisce le informazioni sulla quantità di carica della batteria, ma è anche usato per segnalare altre condizioni come descritto di seguito:

Caricamento standard.

Il modulo della batteria si sta caricando alla sua velocità standard.

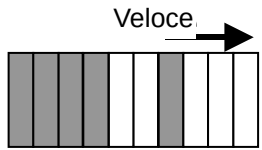

Caricamento lento.

Il modulo della batteria si sta caricando al suo ritmo lento.

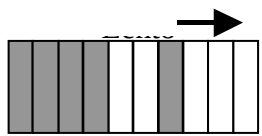

Caricamento standard ma ad un ritmo lento.

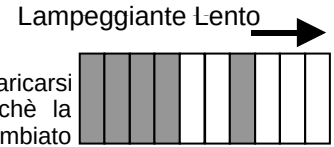

La batteria è stata regolata per caricarsi alla velocità standard ma, poichè la batteria è diventata calda, ha cambiato il ritmo di ricarica ad una velocità inferiore mentre la batteria si raffredda. Aspettate che la temperatura scenda e /o spostatevi in una posizione più fresca.

Non si ricarica. C'è un problema di temperatura.

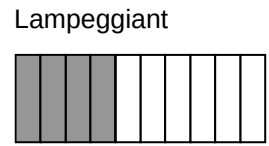

La batteria è troppo calda o troppo fredda e pertanto la ricarica è stata interrotta fin quando la batteria ritorna ad una temperatura compresa tra 0°C e 45°C (32°F e 113°F)

Tensione in ingresso troppo bassa.

L'alimentazione del caricatore non fornisce tensione sufficiente al modulo della batteria per ricaricare le batterie.

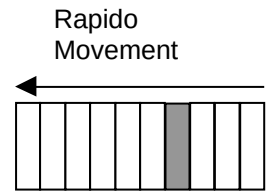

Batteria quasi esaurita

La capacità della batteria è molto bassa. Ricaricatela.

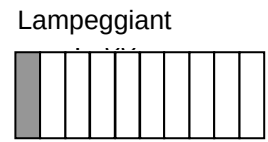

Il modulo della batterie e la manutenzione

Errore: Riazzerate

E’ avvenuto un errore nel modulo della batteria. La circuiteria si sta risistemando. Aspettate qualche istante e l’errore dovrebbe scomparire.

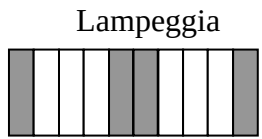

Problema di sovratensione

La tensione di alimentazione del caricatore è troppo alta. Sconnettete il caricatore e rettificate il difetto.

ATTENZIONE
Non connettere a tensioni superiori a 15 V modulo batteria può subire danni permanenti.

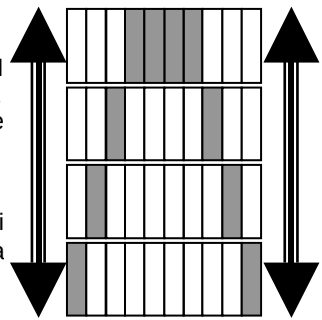

Specificazioni

Gamme

Valore Max	Risoluzione	Precisione	Volt max		Corrente di prova	
			Resistiva	Induttiva	Resistiva	Induttiva
1,9999 mΩ	0,1 µΩ	±0,2%±0,2 µΩ	20 mV	200 mV	10 A	1 A
19,999 mΩ	1 µΩ	±0,2%±2 µΩ	20 mV	200 mV	1 A	1 A
199,99 mΩ	10 µΩ	±0,2%±20 µΩ	20 mV	200 mV	100 mA	1 A
1,9999 Ω	100 µΩ	±0,2%±0,2 mΩ	20 mV	200 mV	10 mA	100 mA
19,999 Ω	1 mΩ	±0,2%±2 mΩ	20 mV	200 mV	1 mA	10 mA
199,99 Ω	10 mΩ	±0,2%±20 mΩ	20 mV	200 mV	100 µA	1 mA
1999,9 Ω	100 mΩ	±0.2%±0.2 Ω	200 mV	200 mV	100 µA	100 µA

		DLRO10	DLRO 10X
Display	Misura	LED $4^{1}/_{2}$ cifre sette segmenti	Grande LCD retroilluminato
Gamma e Sicurezza		Indicazione del LED	
Misura	Modalità	Manuale, Auto, Continua, Induttivo	Manuale, Auto, Continua, Induttivo, Unidirezionale.
	Controllo	Completamente automatico	Completamente automatico con sovrapposizione manuale dell'intensità massima
	Velocità	<3s per corrente diretta ed inversa e per mostrare la media	
Metodo del test		Misure radiometriche in corrente continua a semplice inversione di ciclo e calcolo della media dei risultati.	
Precisione dell'intensità del test		10%	
Stabilità della corrente in uscita		<10 ppm per secondo a 10 mA <100 ppm per secondo ad intensità più alte	
Massima resistenza dei cavi		100 mΩ totali per il funzionamento a 10Aindipendentemente dallo stato della batteria.	

Specificazioni

		DLRO10	DLRO10X
Impedanza di ingresso del voltometro		> 200 kΩ	
Rigetto del ronzio		Meno di 1% ± 20 cifre di errore addizionale con un picco di 100 mV 50/60 Hz. sui cavi potenziali. Un avvertimento indicherà se il ronzio o il rumore superano questo livello.	
Data	Transferimento		Tempo reale o dalla memoria via RS232
	Memoria		700 test
	Campo del Memo		Fino a 200 caratteri per test tramite la tastiera alfanumerica integrale.
Batteria	Capacità	7 Ah NiMH ricaricabile.	
	Durata	In generale 1000 x 10Atest prima della ricarica	
	Ricarica	Via caricatore esterno a 90V - 260V 50/60 Hz o da alimentazione da 12 a 15V a corrente continua	
Tempo di caricamento		2.5 ore a 90% di capacità, 4 ore per la ricarica completa	
Temperatura	Funzionamento	Da +5°C a +45°C (da 41°F a 113°F) a funzionamento ottimale. Da -10°C a +50°C (da 14°F a 122°F) a precisione ridotta	
	Memoria	Da -30°C a +70°C (da -22°F a 158°F)	
	Calibrazione	20°C (68°F)	
	Coefficiente	<0.01% per °C da 5°C a 40°C (<0.006% per °F da 41°F a 104°F)	
	Caricamento standard	Da 0°C a +45°C (da 32°F a 113°F)	
Caricamento rapido		Da +10°C a +45°C (da 50°F a 113°F)	
Umidità	Massima	90% RH a 40°C (104°F) non-condensazione	
Altitudine	Massima	2000m (6562 ft.) alle caratteristiche di sicurezza ottimali	
Sicurezza		In conformità all 'EN61010-1 600 V Categoria III	
CEM		In accordo con IEC61326 incluse emandamento No.1	
Dimensioni		220 x 100 x 237 mm (8.6 x 4 x 9.5 pollici)	
Peso		2.6 kg (5 3/4 libbre.) incluso il modulo della batteria	

La localizzazione del guasti

Messaggio di errore	Difetto	Intervento necessario.
bAtt	Il modulo della batteria principale è debole.	Ricaricate la batteria principale o sostituitela con una carica
_ _ _ _ _	E' avvenuto un errore durante la misurazione. Per esempio si è perso il contatto con una delle sonde.	Rettificate l'errore e ripetete la misura.
ERR 114	Fallimento della somma dei controlli sulla RAM alimentata dalla batteria di riserva. Questo può avvenire se il modulo della batteria principale e la batteria di riserva si esauriscono completamente.	Ricaricate la batteria principale o sostituitela con una carica. Accendete lo strumento. Le costanti di calibrazione saranno salvate dall'EEPROM.
ERR 115	Fallimento della somma dei controlli nell'EEPROM. Le costanti di calibrazione sono state perse. Il DLRO continuerà a lavorare ma la precisione sarà ora, in generale, di ± 2%. All'accensione il display mostrerà la versione del software con i trattini ad ogni lato per esem pio - 1.0 -	Rinviate per la ricalibrazione.

E' possibile riportare il vostro DLRO10X alle impostazioni di fabbricazione originali. Questo cancellerà tutti i risultati memorizzati, regolerà l'orologio ad un valore ed un formato di default, e riporterà tutte le altre impostazioni ai loro valori di default. Questo si effettua premendo il pulsante '3' sulla tastiera alfanumerica mentre accendete il vostro strumento.

Accessori

Accessori standard in dotazione con lo strumento.

Modulo batteria da NiMH da 7 Ah.		6340-101
(2) leve doppie DH4, una con spie luminose.	1,2m / 4 ft	6111-503
Caricabatteria per funzionamento da 115/230 V. con fornitura da 50/60Hz.		6280-333
Adattatore dell'accendisigaro per la carica di batteria.		6280-332
Guida dell'utente.		6172-681
Libretto di garanzia.		6170-618

Accessori opzionali a costo extra

Astuccio da trasporto per DLRO10 e tutti gli accessori standard.		6380-138
Astuccio da trasporto per set di conduttore opzionale.		18313
Derivazione da calibrazione, 10 Ω, potenza nominale di corrente 1 mA.		249000
Derivazione da calibrazione, 1 Ω, potenza nominale di corrente 10 mA.		249001
Derivazione da calibrazione, 100 mΩ, potenza nominale di corrente 1A.		249002
Derivazione da calibrazione, 10 mΩ, potenza nominale di corrente 10 A.		249003
Certificato di calibrazione per derivazioni, NIST		CERT-NIST
Punte di ricambio per leve DH4.	Punta d'ago	25940-012
	Estremità a cialda	25940-014

Conduttori di test opzionali a costo supplementare

Conduttori doppi

(2) leve doppie diritte DH5. Una con spie luminose.	2,5m/8ft	6111-517
(2) leve doppie idonee per funzionamento su sistemi 600 V.	2,5m/8ft	6111-518
(2) leve doppie con contatti elicoidali caricati a molla.	2m/7 ft	242011-7
	2,5m/8ft	6111-022
	5,5m/18ft	242011-18
	6m/20ft	6111-023
	9m/30 ft	242011-30
(2) leve doppie diritte per servizi pesanti con contatti fissi.	2m/7 ft	242002-7
	5,5m/18ft	242002-18
	9m/30 ft	242002-30
(2) morse a C da 5cm (2") per servizi pesanti doppie	2m/7 ft	242004-7
	5,5m/18ft	242004-18
	9m/30 ft	242004-30
Leve doppie con punti d'ago sostituibili	2m/7 ft	242003-7
(2) fermagli Kevin doppi da 1,27 cm (½") laminati in oro	2m/7 ft	241005-7
laminati in argento	2m/7 ft	242005-7
(2) fermagli doppi Kelvin da 3,8 cm (1½")	2m/7 ft	242006-7
	5,5m/18ft	242006-18
	9m/30 ft	242006-30

Conduttori singoli

(2) leve singole per misurazione potenziale.	2m/7 ft	242021-7
	5,5m/18ft	242021-18
	9m/30 ft	242021-30
(2) fermagli di corrente per connessioni di corrente.	2m/7 ft	242041-7
	5,5m/18ft	242041-18
	9m/30 ft	242041-30

Riparazioni e Granzia

Il circuito dello strumento contiene dispositivi sensibili alla statica, e occorre fare attenzione a manipolare il pannello del circuito stampato. Se la protezione di uno strumento è stata compromessa questo non deve essere usato, e deve essere inviato per riparazioni presso personale qualificato e idoneamente addestrato. La protezione risulta compromessa se, per esempio, lo strumento evidenzia danni visibili, non esegue le misurazioni previste, è stato sottoposto a lungo immagazzinaggio in condizioni sfavorevoli, o è stato esposto a notevoli sollecitazioni da trasporto.

I nuovi strumenti sono garantiti per 1 anni dalla data di acquisto da parte dell'utente.
Nota: qualsiasi precedente riparazione o regolazione non autorizzata renderà automaticamente invalida la garanzia.

Riparazione strumento e parti di ricambio
Per l'assistenza tecnica di strumenti DUCTER® contattare:-

AVO INTERNATIONAL	o AVO INTERNATIONAL
Archcliffe Road	Valley Forge Corporate Centre
Dover	2621 Van Buren Avenue
Kent, CT17 9EN.	Norristown, PA 19403
England.	U.S.A.
Tel: +44 (0) 1304 502243	Tel: +1 (610) 676-8579
Fax: +44 (0) 1304 207342	Fax: +1 (610) 676-8625

o una società autorizzata alle riparazioni.

Società autorizzate alle riparazioni
Un numero di società indipendenti di riparazioni di strumenti è stato autorizzato a eseguire lavori sulla maggior parte degli strumenti DUCTER®, usando parti di ricambio DUCTER® originali. Consultare l'agente/distributore incaricato circa le parti di ricambio, strutture di riparazione e consigli sul modo migliore circa le azioni da intraprendere.

Restituzione di uno strumento per riparazioni
Se uno strumento viene restituito al fabbricante per riparazioni, deve essere inviato con trasporto prepagato all'indirizzo appropriato. Una copia della fattura e della bolla di accompagnamento deve essere spedita simultaneamente per via aerea per accelerare il controllo doganale. Una stima delle riparazioni che evidenzi la restituzione ed altri addebiti verranno sottoposti al mittente se necessario, prima dell'inizio dei lavori di riparazione dello strumento.

NOTA:

Le batterie sono in nichelio metallo idruro e se vengono sostituite lo smaltimento delle vecchie va fatto in conformità ai regolamenti locali.

Ohmímetro digital de baja resistencia

DUCTER® DLRO®-10 & DLRO®-10X

Guía del Usuario

MEGGER®

Operation

Advertencias 99
Descripción general 100
Funcionamiento general - DLRO 10 101
Indicadores de corriente de prueba 101
Lámpara de ruido 101
Indicadores 'C' & 'P' 101
Indicadores de aviso ' V' & 'I' 101
Funcionamiento general - DLRO 10X 102
Panel superior del DLRO 10X 102
Pantalla del menú principal del DLRO 10X 102
Mensajes de advertencia 102
Ruido 103
Indicadores 'C' & 'P' 103
Advertencia de voltaje externo 103
Advertencia de corriente de descarga 103
Sistema de menús 103
Menú Prueba 103
Menú Opciones 103
Recuperar 104
Pantalla 104
Descargar 104
Bandas de paso 105
Ajustar reloj 105
Eliminar datos 106
Almacenamiento 106
Menú Rango 106
Introducir notas en la pantalla de notas 106
Almacenamiento de los resultados de prueba 107
Funcionamiento del teclado 107-108
Modos de prueba 109
Modo Normal 109
Modo Automático 109
Modo Continuo 109
Modo de Alta Potencia 109
Modo Unidireccional 110
Prueba con barras dobles DH4 111
Prueba con barras o cables individuales. 111
Secuencia de prueba 112
Comprobación de la resistencia de cables 112
Sobrecalentamiento 112
Módulo de batería y cuidados 113
El módulo de batería 113
Carga de la batería 113
Indicador de estado de la batería 114
Carga estándar. 114
Carga lenta. 114
Carga estándar a baja velocidad. 114
Problema de temperatura. 114
Voltaje de entrada demasiado bajo. 114
Batería casi descargada 114
Error: Reajustar 115
Problema de sobrevoltaje 115
Especificaciones 116-117
Solución de problemas 118
Accesorios 119
Reparación y Garantia 120

He aquí los símbolos usados en el instrumento:

Precaución – Peligro de sacudidas eléctricas.

Equipo protegido mediante aislamiento doble (Clase II).

Equipo conforme con las Directivas de la UE actuales

Advertencias

- **Estas advertencias se deben leer y comprender antes de utilizar el instrumento.**
- **Siempre que sea posible, los circuitos deben desactivarse antes de realizar las pruebas.**

  Si es imposible desactivar el circuito, (ej.: las baterías de alto voltaje no se pueden apagar mientras se prueban sus conexiones) el usuario debe conocer los posibles peligros. Los terminales del instrumento tendrán corriente cuando estén conectados al circuito. Por lo tanto, se recomienda utilizar un conjunto de cables con el aislamiento y (characteristicas ade cuaoas) con el fin de que los terminales estén aislados.

- **La comprobación de los circuitos inductivos puede ser peligrosa:**
  Después de probar una carga inductiva, habrá energía almacenada en la inductancia. Esta energía se libera en forma de una corriente de descarga. Si se desconecta una carga inductiva mientras aún está pasando la corriente, se ocasionará un arco de alto voltaje, lo cual supone un peligro tanto para el usuario como para el componente que se está comprobando.

  El DLRO10 está equipado con una lámpara de **DESCARGA** con la marca 'I', que indica que la corriente está pasando por el bucle C1-C2. Esta lámpara parpadeará al final de una prueba en una carga inductiva mientras la corriente de descarga continúa pasando, y dejará de parpadear cuando la corriente se haya reducido a menos de 1 mA. El DLRO 10X mostrará un mensaje en pantalla para efectuar lo anterior.

  Para comprobar resistencias inductivas grandes, los cables portadores de corriente deben conectarse firmemente al componente que se esté comprobando antes de iniciar la prueba.

  No se recomienda utilizar barras dobles para realizar pruebas en cargas inductivas. Si se utilizan inadvertidamente las barras DH4 en una carga inductiva, la lámpara L1 de las barras parpadeará en color amarillo mientras circula la corriente de descarga, duplicando así la función de la lámpara 'I' del instrumento. Es importante mantener el contacto hasta que la luz L1 deje de parpadear en color amarillo y pase a verde, indicando el final de la prueba.

- **Este producto no es intrínsecamente seguro. No lo utilice en un entorno explosivo.**
- **Nota: La correa está específicamente diseñada para romperse si se somete a una tensión de unos 50 kg.**

Descripción general

LOSI INSTRUMENTOS DE MEDICIÓN DE RESISTENCIAS DLRO 10 y DLRO 10X constituyen una gama de ohmímetros de baja resistencia capaces de medir resistencias desde 0,1 µΩ hasta 2 kΩ. Ambos instrumentos ofrecen una corriente máxima de prueba de 10 amperios CC, que se selecciona automáticamente según el valor de la resistencia que se está comprobando. El DLRO10X le permite cancelar esta selección automática y seleccionar su propia corriente de prueba.

El valor medido de la resistencia se visualiza a la pantalla del instrumento, con una indicación de las unidades: µΩ, mΩ o Ω. El DLRO 10 utiliza una pantalla electroluminiscente e indicadores grandes para mostrar el valor y las unidades respectivamente, mientras que el DLRO 10X muestra toda la información en una pantalla de cristal líquido con iluminación posterior.

El uso de una técnica de medición de cuatro terminales suprime la resistencia del cable de prueba del valor medido y la inversión automática de corriente elimina el efecto de los voltajes estacionarios en la muestra de prueba. Además, antes y durante la realización de una prueba, el contacto del cable de prueba se monitoriza para reducir aún más la posibilidad de lecturas erróneas.

Una medición de la resistencia tarda aproximadamente unos 2,5 segundos, y comprende una medición con corriente directa, corriente inversa y una visualización de la media. En el DLRO 10X, se muestran los tres valores y, opcionalmente, la medición puede estar limitada únicamente a la corriente directa.

El instrumento funciona con una batería recargable de hidruro metálico de níquel (NiMH), que permite realizar mil pruebas de 10 amperios con una sola carga. El módulo de batería contiene circuitos inteligentes que evitan daños en la batería a consecuencia de una sobrecarga, así como un indicador de estado de la batería

El panel superior está cubierto por una tapa extraíble articulada en la parte posterior y que se mantiene cerrada por cierres magnéticos. Esta tapa se puede extraer en caso necesario abriéndola totalmente y sacándola de las bisagras.

Ambos instrumentos están protegidos contra la conexión accidental a voltajes externos de hasta 600 V CC aplicados entre cualquier par de los cuatro terminales, hasta 10 segundos. Tenga en cuenta que si se aplica 600 V en los terminales de potencial se ocasionará un calentamiento interno, y se pueden producir errores de hasta 30 dígitos inmediatamente después de la aplicación de dicho voltaje. La precisión total se restablecerá en dos a tres minutos.

Ambos instrumentos se suministran con un par de barras dobles DH4 con cables de 1,2 m. Si se requiere, existen a disposición otras longitudes y terminaciones.

Funcionamiento general - DLRO 10X

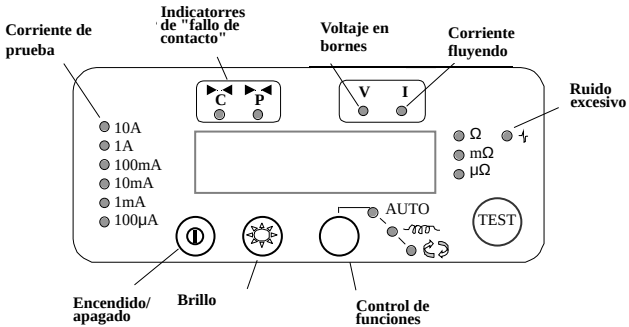

Pulse el interruptor de encendido/apagado para encender el DLRO 10. Todas las lámparas se encenderán, las lámparas V y I parpadearán, se mostrará la versión de software y se encenderá la lámpara Ω. Si los cables de prueba no se han conectado a la muestra de prueba, las lámparas 'C' y 'P' también se encenderán. Pulse de nuevo el interruptor de encendido/apagado para apagar el instrumento. Si el instrumento no se utiliza durante 5 minutos, se apagará automáticamente.

Ajuste el control de brillo a un nivel cómodo.

Seleccione el modo Prueba pulsando el botón Modo varias veces. Las lámparas indicadoras se desplazarán por los diferentes modos de Prueba sucesivamente (véase la sección sobre modos de Prueba). Pulse el botón Prueba para iniciar una prueba.

Indicadores de corriente de prueba

La corriente de prueba se selecciona automáticamente por el DLRO 10 y viene indicada por las lámparas situadas a la izquierda del panel. El valor medido se muestra en la ventana principal y las unidades (µΩ, mΩ o Ω) se indican por las lámparas situadas a la derecha de la ventana.

Lámpara de ruido

El ruido que sobrepase los 100 mV 50/60 Hz encenderá la lámpara de 'Ruido' y la precisión de la medición no será fiable.

Indicadores 'C' & 'P'

La lámpara 'C' se encenderá para indicar un fallo de contacto en el bucle 'C1-C2'. La lámpara 'P' se enciende cuando existe una desconexión en el bucle P1-P2.

Indicadores de aviso 'V' & 'I'

Si se aplica voltaje externo a las terminales, la lámpara 'V' parpadeará, lo cual es un aviso de que el componente bajo prueba tiene corriente y puede existir peligro. No se puede realizar una prueba en esta situación.

La lámpara 'V' se encenderá si se aplica un voltaje mayor de 50 V entre cualquier terminal de voltaje y un terminal de corriente. Si el voltaje aparece justo entre los terminales de potencial o los terminales de corriente, la lámpara se encenderá a 100 V máximo o 5 V máximo respectivamente.

Nota: La lámpara 'V' sólo indicará si existe voltaje entre los terminales. La lámpara no funcionará si todos los terminales están en el mismo alto voltaje. Tampoco funcionará cuando se apague el instrumento.

La lámpara 'I' se encenderá si sigue pasando una corriente superior a 1 mA después de realizar una prueba. Esto implica que se ha comprobado una carga inductiva y sigue descargándose. No desconecte el bucle de corriente hasta que se haya apagado la lámpara 'I'.

Funcionamiento general - DLRO 10X

Panel superior del DLRO 10X

Todos los controles necesarios para configurar y utilizar

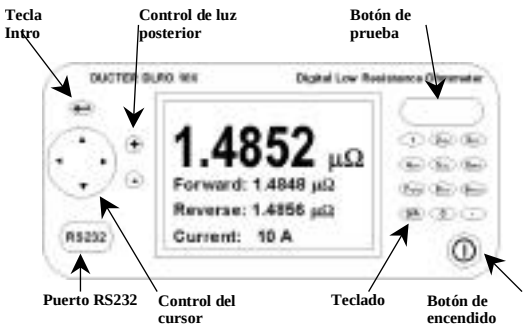

el DLRO 10X están ubicados en el panel superior del instrumento.

A la izquierda de la pantalla grande de cristal líquido se encuentran los controles para desplazarse por la pantalla, controlar el sistema de menús y ajustar el contraste y la luz posterior de la pantalla.

A la derecha de la pantalla hay un botón grande de prueba, el botón de encendido/apagado y un teclado alfanumérico para introducir notas relacionadas con una prueba, que se almacenarán con los resultados de la prueba para consultarse con posterioridad.

Para encender su DLRO 10X, pulse el botón de encendido/apagado durante 1 segundo aproximadamente. Pulse de nuevo el botón para apagar el instrumento. Si el instrumento no se utiliza durante 5 minutos, se apagará automáticamente.

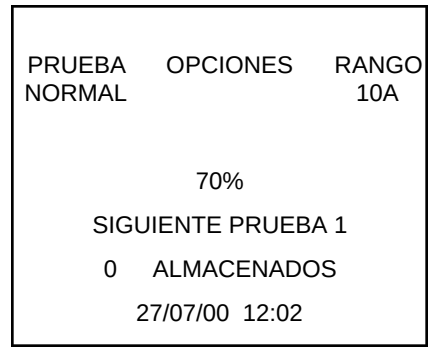

Pantalla del menú principal del DLRO 10X

Cuando se enciende por primera vez el DLRO 10X, se mostrará una pantalla de copyright, seguido por la pantalla del menú principal.

Esta pantalla incluye información como el porcentaje de carga de batería restante, el número de índice de la prueba siguiente, el número de pruebas almacenadas y la fecha y hora actuales.

Esta pantalla también permite acceder al sistema de menús, con el que puede configurar su instrumento y seleccionar los parámetros de prueba deseados. La navegación por este sistema de menús se realiza con el control del cursor y la tecla Intro.

Mensajes de advertencia

De vez en cuando, la pantalla del menú principal mostrará determinados mensajes de advertencia

Funcionamiento general - DLRO 10X

Ruido

El ruido que sobrepase los 100 mV 50/60 Hz activará el mensaje 'Ruido' en la parte inferior de a pantalla. Por encima de este nivel, la precisión de la medición no será fiable.

Indicadores 'C' & 'P'

Una medición correcta requiere que el componente bajo prueba complete el circuito de corriente y el circuito de detección de voltaje. El DLRO 10X comprueba esta continuidad. Si hay una continuidad inadecuada en cualquier circuito, se mostrará un mensaje en la parte inferior de la pantalla que será "PCIRCUITO ABIERTO" si los contactos de voltaje tienen una alta resistencia, "C CIRCUITO ABIERTO " si no se realiza el circuito de corriente o "CP CIRCUITO ABIERTO " si ambos circuitos son inadecuados. Compruebe los contactos, ya que no se podrá realizar una medición si se muestra alguno de estos mensajes en la pantalla.

Advertencia de voltaje externo

Si se aplica un voltaje externo a las terminales, el mensaje "VOLTS EXT" parpadeará en la pantalla, lo cual es un aviso de que el componente bajo prueba tiene corriente y puede existir peligro. No se puede realizar una prueba en esta situación.

El mensaje "VOLTIOS EXT" parpadeará si se aplica un voltaje mayor de 50 V entre cualquier terminal de voltaje y un terminal de corriente. Si el voltaje aparece justo entre los terminales de potencial o los terminales de corriente, el mensaje se mostrará a 100 V máximo o 5 V máximo respectivamente.

El mensaje sólo se mostrará si existe voltaje ENTRE los terminales. El mensaje no se mostrará si todos los terminales están en el mismo alto voltaje. Tampoco se mostrará cuando se apague el instrumento.

Advertencia de corriente de descarga

El mensaje FLUJO DE CORRIENTE se mostrará si sigue pasando una corriente superior a 1 mA después de terminarse una prueba. Esto implica que se ha comprobado una carga inductiva y sigue descargándose. No desconecte el bucle de corriente mientras se sigue mostrando la advertencia de descarga.

El sistema de menús

Utilice las flechas izquierda y derecha de control del cursor para seleccionar el menú necesario. Pulse el control del cursor Abajo para ver las opciones disponibles en dicho menú. Seleccione la opción necesaria por medio del control del cursor y pulse Intro para ajustar dicha opción. Según el elemento de menú seleccionado, la pantalla mostrará más opciones o regresará a la pantalla del menú principal.

Menú Prueba

Este submenú selecciona el modo prueba. Sólo puede haber un menú activo al mismo tiempo, y el modo activo se mostrará debajo del encabezamiento PRUEBA. (Véase la sección siguiente de modos de prueba en este manual para obtener detalles de cada modo).

Menú opciones

El menú Opciones incluye cinco opciones que no están relacionadas unas con otras.

Funcionamiento general - DLRO 10X

Recuperar

Esta opción permite recuperar en la pantalla o en un PC los resultados almacenados.

```
        PRUEBA NÚMERO 2
         DD MM AA HH MM
         09/10/00 12:24
PRUEBA NORMAL
MEDIA          12.6 µΩ
DIRECTA        14.0 µΩ
INVERSA        11.2 µΩ
CORRIENTE      10 A

RESULTADOS     NOTA
```

Pantalla

Recupera cada prueba, de forma secuencial, en la pantalla del instrumento, empezando por el último resultado almacenado.

Utilice las flechas Arriba y Abajo del cursor para avanzar o retroceder por los resultados almacenados. De forma alternativa, si conoce el número de índice de la prueba que desea mostrar, escriba el número con el teclado y pulse Intro.

Un asterisco (*) junto a la palabra "NOTA" significa que hay notas incluidas con este resultado. Pulse la flecha Derecha del cursor para ver estas notas.

Descargar

Esta opción permite que todo el contenido del almacén de datos se envíen al puerto RS232 situado a la i zquierda de la pantalla. Se suministra una copia de AVO Download Manager, que facilita la descarga y formatea los datos.

La descarga de los datos no ocasiona que los datos almacenados se borren de la memoria. Para borrar los datos de la memoria, consulte la sección "Eliminar datos" a continuación.

Nota – El DLRO 10X también permite disponer de los datos a través del puerto RS232 en tiempo real, y se pueden imprimir en una impresora en serie autoalimentada.

La salida tiene la forma siguiente:

NÚMERO DE PRUEBA

TIPO DE PRUEBA

DD MM AA HH MM

01/01/00 00:33

RESISTENCIA DIRECTA

RESISTENCIA INVERSA

RESISTENCIA MEDIA

CORRIENTE SELECCIONADA

LÍMITE SUPERIOR

LÍMITE INFERIOR

PASO/FALLO

Las últimas tres líneas sólo se mostrarán si se han ajustado bandas de paso

Funcionamiento general - DLRO 10X

Bandas de paso

Esta opción le permite establecer límites superiores e inferiores entre los que debe estar la media del resultado de prueba si se transmite como Paso (un tono largo del zumbador). Los valores fuera de estos límites se transmitirán como Fallo (un tono corto del zumbador).

Los valores se introducen a través de un teclado, junto con puntos decimales, donde corresponda, e incluyendo µ o m (véase la sección sobre el Teclado alfanumérico). No es necesario introducir el símbolo Ω. El límite superior debe ser inferior o igual a 2000,0 Ω y el límite inferior debe ser menor que el límite superior.

Después de ajustar el límite superior, pulse Intro. El DLRO 10X comprobará si se han introducido los números válidos y pasará al límite inferior. Ajuste este límite y pulse Intro. El DLRO 10X comprobará si se han introducido los números válidos y mostrará la opción para ACTIVAR o DESACTIVAR las bandas de paso.

Seleccione su opción y pulse Intro. Se regresará a la pantalla del menú principal.

Nota: Las bandas de paso seguirán activadas o desactivadas hasta que vaya a esta pantalla y cambie la selección. Si lo único que se requiere es cambiar las bandas de paso de ACTIVADAS a DESACTIVADAS o viceversa, vaya a la pantalla BANDA DE PASO y pulse Intro hasta que se muestre la opción ACTIVADA/DESACTIVADA, en cuyo momento puede cambiar la selección.

Ajustar reloj

Esta opción ajusta la fecha y hora del reloj, así como el formato de fecha. Cuando vaya a esta pantalla, se mostrará la fecha y la hora actual y el formato de fecha.

Utilice las flechas Arriba y Abajo de control del cursor para ajustar los datos seleccionados. Vaya al siguiente elemento por medio de la flecha Derecha de control del cursor.

PRUEBA NORMAL	OPCIONES	RANGO AUTO
	DD MM AA HH MM	
	09/10/00 15:08	
	DD MM AA	
	09/10/00 12:02	

La fila debajo de DD MM AAHH MM incluye respectivamente el días, mes, año de dos cifras, la hora en formato de 24 horas y los minutos. Estos datos se deben introducir en esta secuencia con independencia del formato de fecha que desee utilizar.

La línea inferior DD/MM/AA muestra el formato de fecha actual. Si se pulsa la flecha Arriba de control del cursor se desplazará por las opciones disponibles: DD/MM/AA, MM/DD/AA o YY/MM/DD.

La línea inferior muestra el ajuste actual de fecha y hora. Este ajuste se actualiza cuando pulsa Intro para salir de la función de ajuste de reloj. Sin embargo, las pruebas almacenadas antes de cambiar el formato de fecha seguirán en el formato anterior.

Funcionamiento general - DLRO 10X

Eliminar datos

Seleccione **Eliminar datos** si desea borrar los datos almacenados en la memoria del DLRO 10X. En caso de que haya seleccionado esta opción accidentalmente, se le pedirá que confirme la acción de eliminación de datos; el valor predeterminado es NO. Cambie este valor a SI y pulse Intro si desea eliminar todos los datos.

Nota: TODOS los datos almacenados se eliminarán.

Almacenamiento

La opción **Almacenamiento** establece el valor predeterminado para el almacenamiento de datos. Puede configurarse para almacenar siempre los datos o no almacenarlos nunca. Seleccione la opción deseada en la parte inferior de la pantalla y pulse Intro.

Con excepción de las pruebas realizadas en modo Continuo, al final de cada prueba podrá cambiar el valor predeterminado seleccionado ALMACENAR o NO ALMACENAR en la parte inferior de la pantalla de resultados.

Al final de una prueba, si la memoria está llena, el mensaje ALMACENAR / NO ALMACENAR cambiará a MEMORIALLENA y no se almacenarán más pruebas.

Los datos se almacenan de forma indefinida si hay instalado un paquete de baterías cargadas. Si la batería principal se descarga o se extrae, los datos se mantendrán durante 4 días por medio de una batería de reserva interna. Cuando se vuelva a instalar un paquete de baterías cargadas, la batería de reserva se recargará a su capacidad máxima en un 1 semana.

Menú Rango

El DLRO 10X utiliza una corriente de prueba de entre 100 µA y 10A para medir la resistencia del componente bajo prueba. Si está ajustado en **AUTO,** el DLRO 10X seleccionará la corriente según la resistencia que detecte (véase la sección Especificaciones, Rangos)

Sin embargo, en algunos casos puede ser necesario ajustar una corriente máxima de prueba. En este caso, desplace el cursor a la corriente deseada y pulse Intro.

Existen seis corrientes de prueba disponibles: **10 A, 1 A, 100 mA, 10 mA, 1 mA** y **100 µA**. Si se selecciona 10 A máximo, tendrá el mismo efecto que seleccionar AUTO.

La pantalla del menú principal mostrará el rango activo de la corriente, debajo del encabezamiento RANGO.

INTRODUCIR NOTAS EN LA PANTALLA DE NOTAS

Al final de cada prueba, (con excepción de una prueba realizada en modo Continuo), puede seleccionar la opción **ALMACENAR** o **NO ALMACENAR** para guardar o no los resultados de la prueba. Seleccione la opción deseada por medio del control de cursor. Esta acción cancela el ajuste predeterminado configurado en Opciones, Almacenamiento sólo para una prueba.

Si desea agregar comentarios a los resultados de la prueba, en lugar de pulsar Intro, pulse brevemente una de las doce teclas. Accederá a una pantalla de notas que le permite introducir hasta 200 caracteres de información alfanumérica sobre la prueba. Cuando haya introducido la información, pulse Intro y la medición y las notas se almacenarán independientemente de si

Funcionamiento general - DLRO 10X

se ha seleccionado ALMACENAR o NO ALMACENAR.

Si no desea agregar notas y desea aceptar el ajuste predeterminado ALMACENAR / NO ALMACENAR, puede pulsar el botón Prueba para iniciar una nueva prueba.

ALMACENAMIENTO DE LOS RESULTADOS DE PRUEBA

Cada prueba está numerada, comenzando con la prueba 1. Este número de prueba se incrementa automáticamente a medida que se almacena cada resultado. La memoria de resultados de prueba puede guardar un máximo de 700 pruebas, y cada una se identifica por su número, fecha y hora de prueba. Cuando la memoria está llena, el número de prueba se reajustará a 1 y los últimos resultados de prueba se sobreescribirán.

Es aconsejable enviar todos los datos a un PC y eliminar todos los datos antes de que el número de prueba alcance su máximo. Al eliminarse los datos se reajustará el número de prueba a 1.

Advertencia: Si el módulo de la batería principal se gasta totalmente durante una prueba, el número de prueba se reajustará a 1. Para evitarlo, recargue la batería antes de que disminuya a menos del 10% de la carga completa.

FUNCIONAMIENTO DEL TECLADO

El teclado de 12 teclas es similar al utilizado en los teléfonos móviles, ya que cada tecla permite introducir diferentes caracteres según el número de veces que se pulsa.

El teclado se utiliza para introducir datos en el campo de Notas.

Si se pulsa la tecla azul 9/A se cambiará la función del teclado entre modo alfanumérico y numérico.

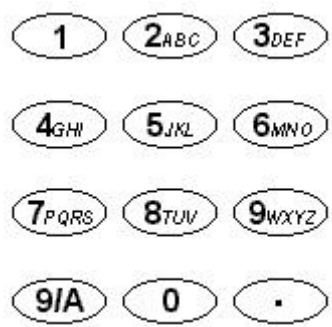

En el modo alfanumérico, una barra vertical larga parpadeante (|) indica el cursor. Las teclas 2 a 9 permiten escribir la letra mostrada en las teclas según el número de veces que se pulsan. Por ejemplo, si la tecla 2 se pulsa una vez, se mostrará ‘A’, si se pulsa dos veces ‘B’, etc..

La tecla 0 permite introducir un espacio.

La tecla 1 es un espacio de retroceso que borra el último carácter.

En el modo numérico, una barra corta parpadeante (') indica el cursor. Las teclas 1 - 9 y 0 generan dicho número cuando se pulsan. Pulse brevemente la tecla correspondiente para introducir el número deseado. Si hay una pausa el cursor se desplazará al carácter siguiente. Si una tecla se mantiene pulsada, se repetirá de nuevo el mismo carácter.

Funcionamiento general - DLRO 10X

La tecla en la esquina inferior derecha del teclado con un punto es una tecla especial que genera 20 símbolos especiales. Cada pulsación genera sucesivamente el carácter mostrado a continuación: -.

. Punto decimal o punto ortográfico

Ω Símbolo de ohmios

m m minúscula (abreviatura de mili)

µ Símbolo de micro

Símbolo conocido como "almohadilla" y utilizado generalmente como abreviatura de "número"

% Signo de porcentaje

(Paréntesis izquierdo

) Paréntesis derecho

- Guión o signo menos

/ Barra

: Dos puntos

@ símbolo "arroba"

√ Marca de verificación

! Signo de exclamación

? Signo de interrogación

$ Símbolo de "dólar"

= Signo "igual a"

< Símbolo "menor que"

> Símbolo "mayor que"

* Asterisco

Técnicas de pruebas y aplicaciones

MODOS DE PRUEBA

El DLRO 10 tiene 4 modos de prueba que se seleccionan pulsando varias veces el botón Modo. Al final de cada prueba, el DLRO 10 mostrará la media de los valores obtenidos con corriente directa e inversa.

El DLRO 10X tiene 5 modos, los cuales se seleccionan en el menú PRUEBA por medio del control del cursor y la tecla Intro. Al final de una prueba, el DLRO 10X mostrará tres valores de resistencia: el obtenido con la corriente directa, el obtenido con la corriente inversa y el valor medio.

Modo Normal

El modo Normal realiza una sola medición de la resistencia de la muestra utilizando corriente directa e inversa.

Tenga en cuenta que, en este modo, los cables de corriente y voltaje deben estar conectados en la muestra de prueba antes de pulsar el botón Prueba. Para realizar otra medición, asegúrese de que los cables de prueba están conectados y pulse el botón Prueba.

Modo automático

Si el modo Automático está seleccionado, su instrumento seguirá en un estado de espera hasta que los cables de medición de corriente Y voltaje se conecten al componente que se esté comprobando. En este momento, se iniciará automáticamente una prueba de corriente directa e inversa.

Para realizar otra medición, simplemente desconecte el contacto con la muestra de prueba y vuelva a realizar el contacto.

Por ejemplo, si se miden empalmes en una barra de distribución larga, puede dejar el circuito de corriente conectado en los extremos opuestos de la barra de distribución. La medición se activará simplemente al realizar el contacto con los cabezales medidores de voltaje en los empalmes que desee medir.

Modo Continuo

El modo Continuo requiere que las conexiones se realicen antes de pulsar el botón Prueba. Su instrumento repetirá sus mediciones de corriente directa e inversa y mostrará los resultados cada 3 segundos aproximadamente hasta que se desconecte el contacto o se pulse el botón Prueba.

Modo inductivo

Los instrumentos DLRO10 y DLRO10X son capaces de efectuar mediciones resistivas de d.c. en cargas que exhiben un componente inductivo usando modo de prueba indicado mediante el símbolo inductor en el DLRO10, o usando el modo inductivo en el DLRO10X.

En la mediciûn de cargas inductivas es indispensable que los conductores portadores de corriente estèn sujetos con seguridad al elemento que se desea probar y que no sean retirados antes de que se haya descargado cualquier cantidad de carga almacenada al finalizar la prueba. Si no se observan estas instrucciones podría producirse un arco, lo cual podría ser peligroso para el instrumento y para el operador del mismo.

Una vez seleccionado el modo inductivo, conecte los cuatro conductores al elemento que desea probar y pulse el botûn de prueba.

El DLRO verificará que los cuatro conductores estèn en contacto adecuado con el elemento en prueba y luego aplicará una corriente de prueba y tratará de localizar el alcance correcto. La pantalla visualizará 1 - - seguido de 1 - - - -. Durante este tiempo podrá ver incrementar o disminuir el alcance de la corriente. En el DLRO10, la lámpara ‘I’ parpadeará y se visualizará el mensaje “Corriente fluyendo” en la pantalla del DLRO10X.

Técnicas de pruebas y aplicaciones

Después de transcurrir un corto periodo de tiempo, las lecturas de resistencia aparecerán en la pantalla, reducièndose gradualmente durante cierto periodo de tiempo hasta que se obtiene una lectura estable.

El tiempo requerido para obtener una lectura estable puede variar de unos segundos a varios minutos, dependiendo de la inductancia y resistencia de la muestra sometida a prueba. No hay un lìmite de tiempo para la prueba de modo inductivo, la cual continuará hasta que el operador pulsa el botûn de prueba.

Cuando se termina la prueba, la lámpara 'I' permanecerá encendida en el DLRO10 û se visualizará el mensaje "Descargando" en la pantalla del DLRO10X hasta que se haya descargado cualquier energía almacenada. Cuando se apagan estos mensajes será seguro desconectar los conductores 'C'.

No obstante, el indicador de descarga es un dispositivo electrûnico activo y no deberá confiarse uno. Deberá observe los procedimientos de manejo de su empresa.

Al final de la prueba ambos instrumentos visualizarán la resistencia medida; el DLRO10 parpadeará la lámpara de corriente relevante mientras que el DLRO10X visualizará la corriente de prueba usada en la pantalla.

Nota: - En modo inductivo la corriente de prueba de 10A no será utilizada.

Modo unidireccional

En el DLRO 10X solamente, este modo efectúa la mediciûn como en modo automático pero usando corriente directa únicamente.

Podrá repetirse una prueba determinada interrumpiendo el contacto y volviendo a aplicar las sondas de prueba o pulsando el botûn de prueba.

Técnicas de pruebas y aplicaciones

PRUEBAS CON BARRAS DOBLES DH4

Cada barra está marcada con la letra P, que indica los terminales de potencial. Estos terminales son los contactos 'interiores' cuando se realiza una medición (según se indica en la sección siguiente 'Pruebas con barras dobles o cables individuales').

Una de las barras DH4 incluye dos lámparas L1 y L2 y un cable extra. Este cable debe conectarse a la toma de 4 mm situada junto a los terminales principales a la derecha del instrumento. Estas lámparas ofrecen información al operario, que de otra forma sólo estaría disponible en la pantalla del instrumento. El significado de estas lámparas se describe a continuación.

Por ejemplo, si se utilizan las barras dobles DH4 con el DLRO 10 en modo de prueba AUTO:

1. Pulse el botón PRUEBAdel instrumento.
2. Se encenderá la lámpara L1, mostrándose en rojo continuo para indicar un fallo de contacto. Consulte el panel de instrumentos para obtener detalles si es necesario.
3. Cuando se conecten los cuatro contactos, la lámpara L1 se apagará.
4. No se encenderá ninguna lámpara durante la prueba a menos que falle un contacto.
5. La lámpara L2 se encenderá, mostrándose en verde continuo cuando la corriente disminuya a menos de 1 mA, para indicar el final de la prueba.
6. Al retirar los cabezales medidores se apagará la lámpara verde L2 (final de prueba) y se encenderá la lámpara roja L1 (no hay contacto).

Debido a que su DLRO garantiza siempre un buen contacto antes de aplicar toda la corriente de prueba, no habrá "salpicadura" que desgaste las puntas del contacto. No obstante, si se desgastan o redondean las puntas, se pueden sustituir simplemente extrayendo las puntas desgastadas e insertando puntas nuevas.

DLRO 10 y DLRO 10X (sin bandas de paso)Spia L1		
Lámpara L1	**Lámpara L2**	**Significado**
Rojo	Apagada	Contacto inadecuado en C y/o contactos P
Rojo parpadeante	Apagada	Voltaje presente entre contactos
Apagada	Verde	Corriente inferior a 1 mAy prueba terminada.
DLRO 10X SÓLO si hay bandas de paso ajustadas		
Apagada	Verde	Paso de medición
Apagada	Red	Fallo de medición

PRUEBAS CON BARRAS DOBLES O CABLES INDIVIDUALES.

Conecte los cuatro cables según se muestra:

Si se utilizan barras dobles, asegúrese de que el cabezal medidor P está dentro de los cabezales C.

Técnicas de pruebas y aplicaciones

SECUENCIA DE PRUEBA

Al pulsar el botón PRUEBA se inicia la secuencia de prueba.

La comprobación de la resistencia de contacto se realiza enviando 100 mA a través del bucle C1-C2 y comprobando que el voltaje es inferior a 4 V. A continuación envíe 80 mA a través del bucle P1-P2 y compruebe que el voltaje es inferior a 250 mV. Si se sobrepasa cualquier valor, se mostrará la lámpara o mensaje de advertencia respectivos.

Cuando se hayan rectificado todos los fallos, la corriente de prueba se incrementa hasta que el voltaje en P1-P2 se encuentre en el intervalo de 2 mV a 20 mV. Posteriormente, esta corriente se aplicará en una dirección de avance y retroceso para obtener dos mediciones.

El DLRO 10X muestra ambas mediciones, junto con la media, mientras que el DLRO 10 muestra sólo la media.

Si la resistencia combinada de los cables de corriente y la muestra de prueba es superior a 100 mΩ, no será posible la comprobación a 10 A. Se probará una resistencia de 1,9 mΩ en la corriente siguiente más baja (1 A) y el resultado se mostrará como 1,900 mΩ en lugar de 1,9000 mΩ.

COMPROBACIÓN DE LA RESISTENCIA DE CABLES

Para la comprobación a 10 A, la resistencia combinada de los cables de corriente no debe ser superior a 100 mΩ. De esta forma se garantizará que la caída de voltaje en los cables es inferior a 1 voltio y permitirá la comprobación a 10 A en las peores condiciones. Si desea limitar la corriente de prueba a no más de 1 A, en el DLRO 10 utilice cables de corriente con una resistencia de unos 1 Ω, o en el DLRO 10X seleccione 1 A como la corriente de prueba máxima en el submenú RANGO.

SOBRECALENTAMIENTO

Cuando realice pruebas repetidas rápidamente a 10 A con cables de corriente con una resistencia combinada de 100 mΩ, se disiparán 10 W de calor en los cables y 30 W en su instrumento. Si la temperatura ambiente es elevada, habrá un sobrecalentamiento interno y se mostrará el mensaje "calentamiento" en la pantalla del instrumento, deteniéndose la prueba.

Después de unos minutos para el enfriamiento, se podrá continuar la comprobación.

Si persiste este problema, utilice cables de corriente con una resistencia mayor (ej.: 200 mΩ a 300 mΩ), lo cual reducirá la formación de calor interno.

Módulo de batería y cuidados

EL MÓDULO DE BATERÍA

El módulo de batería contiene celdas de hidruro metálico de níquel e incorpora un sistema de control de la batería que controla la carga y descarga. Esto constituye un sistema de batería de alta capacidad y bajo peso que se puede recargar en cualquier momento. El usuario no puede sobrecargar o sobredescargar la batería. Para su propia comodidad, se recomienda cargarla frecuentemente para mantenerla con carga, aunque no se dañará si se deja descargada.

En la parte delantera del módulo de batería hay dos botones y una pantalla electroluminiscente de 10 segmentos.

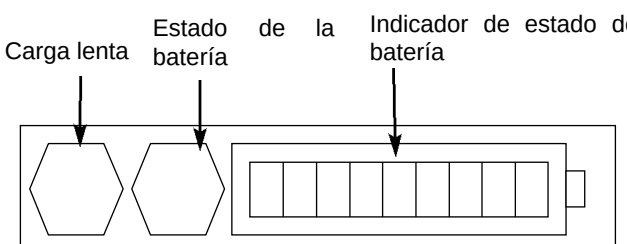

Para conocer la cantidad de carga en su módulo de batería, ya esté conectada a su DLRO o por separado, pulse el botón de estado de la batería. El indicador de estado de la batería encenderá entre 1 y 10 segmentos, lo que significa una carga del 10% y 100% respectivamente. Después de unos segundos, la pantalla se apagará automáticamente.

CARGA DE LA BATERÍA

Nota – La batería sólo debe cargarse en un intervalo de temperatura de 0°C a 45°C. No se podrá realizar la carga rápida si la temperatura está por debajo de 10°C. La carga rápida ocasiona un incremento de la temperatura de la batería. Si la temperatura sobrepasa los 45ºC, la velocidad de carga disminuirá automáticamente.

Para cargar la batería, debe extraerse el módulo de batería del instrumento. Extraiga el módulo presionando el área circular elevada de las abrazaderas de sujeción y saque la parte superior de la abrazadera del cuerpo del instrumento. El módulo se desconectará de la base del instrumento.

Enchufe el cargador o conéctelo a la batería de 12 voltios tipo vehículo por medio del cable de 'mechero' suministrado. El indicador electroluminiscente de estado de la batería se encenderá y mostrará un movimiento cuando la batería se esté cargando. La batería se puede recargar antes de que se haya descargado completamente. Normalmente se recargará hasta el 90% de su capacidad en 2,5 horas. La carga completa puede tardar hasta 4 horas antes de indicarse este estado, según el estado inicial de la batería. Cuando se haya terminado la carga, el circuito de control de la batería se apagará para evitar la sobrecarga.

Su módulo de batería se puede utilizar de forma segura en un estado parcialmente cargado, y no se verá afectado si se almacena descargado. Sin embargo, es posible que desee tener una batería de recambio para sustituir la que está en uso, con el fin de utilizar su DLRO de forma continua.

A medida que la batería envejece, puede perder su capacidad. En este caso, el módulo de batería tiene una función de carga lenta, que se activa pulsando el botón de carga lenta mientras se enciende el suministro del cargador, hasta que las barras indicadores empiezan a moverse. Este método de carga puede

Módulo de batería y cuidados

tardar hasta 48 horas, por lo que se recomienda realizarlo durante un fin de semana o cuando el instrumento no vaya a utilizarse.

Una batería completamente cargada, incluso si no se utiliza, se descargará durante un período de varias semanas (la descarga será más rápida a temperaturas elevadas). Compruebe siempre el indicador de estado de la batería antes de empezar a trabajar. Una batería completamente cargada encenderá todos los segmentos. Una batería completamente descargada no encenderá ningún segmento.

Nota: todas las baterías tienen una vida útil reducida si se exponen a temperaturas elevadas de forma constante. Una temperatura constante de 30°C ocasionará probablemente que la batería dure menos de 5 años. Una temperatura de 40°C reducirá su vida útil a 2 años.

INDICADOR DE ESTADO DE LA BATERÍA

El indicador de estado de la batería proporciona información sobre la cantidad de carga en la batería, aunque también se utiliza para indicar otros estados, como los siguientes:

Carga estándar.

El módulo de batería se está cargando a su velocidad estándar.

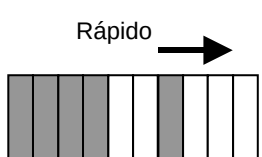

Carga lenta.

El módulo de batería se está cargando a una velocidad baja.

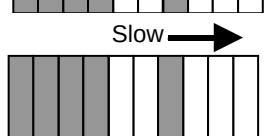

Carga estándar a baja velocidad.

La batería se ha ajustado para cargarse a su velocidad estándar; sin embargo, debido a que la batería se ha calentado, se ha invertido la velocidad de carga a una velocidad más baja mientras se enfría la batería. Espera a que baje la temperatura y/o vaya a una ubicación menos caliente.

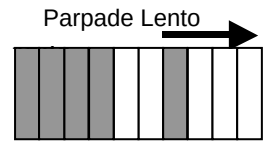

Sin carga. Hay un problema de temperatura.

La batería está demasiado caliente o fría y la carga se ha interrumpido hasta que se restablezca una temperatura entre 0°C y 45°C (32°F y 113°F)

Voltaje de entrada demasiado bajo.

El suministro del cargador no proporciona suficiente voltaje al módulo de batería para cargar las baterías.

Batería casi descargada

La capacidad de la batería es muy baja. Recárguela.

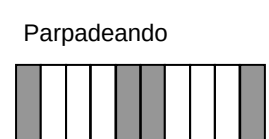

Error: Reajustar

Módulo de batería y cuidados

Se ha producido un error en el módulo de batería. Los circuitos se están reajustando. Espere unos instantes hasta que se solucione el fallo.

Parpadeando

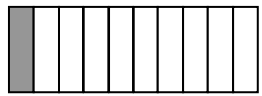

Problema de sobrevoltaje

El voltaje del suministro de carga es demasiado alto. Desconecte el cargador y solucione el fallo.

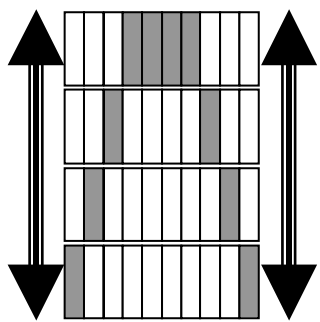

AVISO
La conexión a una fuente de tensión superior a 15 V puede causer dañor permanentes al módulo de baterías.

Especificaciones

Rangos

Escala plena	ResoluciÛn	PrecisiÛn	Voltios e escala plena		Corriente de prueba	
			Resistivo	Inductivo	Resistivo	Inductivo
1,9999 mΩ	0,1 µΩ	±0,2%±0,2 µΩ	20 mV		10 A	1 A
19,999 mΩ	1 µΩ	±0,2%±2 µΩ	20 mV	20 mV	1 A	1 A
199,99 mΩ	10 µΩ	±0,2%±20 µΩ	20 mV	200 mV	100 mA	1 A
1,9999 Ω	100 µΩ	±0,2%±0,2 mΩ	20 mV	200 mV	10 mA	100 mA
19,999 Ω	1 mΩ	±0,2%±2 mΩ	20 mV	200 mV	1 mA	10 mA
199,99 Ω	10 mΩ	±0,2%±20 mΩ	20 mV	200 mV	100 µA	1 mA
1999,9 Ω	100 mΩ	±0.2%±0.2 Ω	200 mV	200 mV	100 µA	100 µA

	DLRO10	DLRO 10X
Medición de la pantalla	Pantalla electroluminiscente de siete segmentos de 4 $^{1}/_{2}$ dígitos	Pantalla de cristal líquido de iluminación posterior
Rango y seguridad	Indicación electroluminiscente	
Modo de medición	Manual, Automático, Continuo, Inductivo	Manual, Automático, Continuo, Inductivo, Unidireccional.
Control	Totalmente automático	Totalmente automático con conmutación manual de la corriente máxima
Velocidad	<3 s para corriente directa e inversa y para mostrar la media	
Método de prueba	Mediciones de relaciones de CC inversora monocíclica y resultado de la media calculado.	
Precisión de la corriente de prueba	10%	
Estabilidad de la corriente de salida	<10 ppm por segundo a 10 mA <100 ppm por segundo a corrientes elevadas	
Resistencia máxima de cable	100 mΩ total para funcionamiento a 10 A, independientemente del estado de la batería.	

Especificaciones

		DLRO10	DLRO10X
Impedancia de entrada de voltímetro		> 200 kΩ	
Rechazo de zumbido		Menos de un error adicional de 1% ± 20 dígitos con 100 mV máximo a 50/60 Hz en los cables de potencial. Se muestra aviso si el zumbido o ruido sobrepasa este nivel.	
Transferencia de datos			Tiempo real o almacenamiento a través de RS232
	Almacenamiento		700 pruebas
	Campo de notas		Hasta 200 caracteres por prueba a través del teclado alfanumérico integrado.
Capacidad de la batería		7 Ah NiMH recargable.	
	Vida útil	Normalmente 1.000 pruebas a 10 A antes de la recarga	
	Recarga	Cargador externo 90V - 260V 50/60 Hz o suministro CC 12 a 15 V	
Tiempo de carga		2,5 horas hasta el 90% de capacidad, 14 horas para la carga completa	
Temperatura	Funcionamiento	Da +5°C a +45°C (da 41°F a 113°F) a funzionamento ottimale. Da -10°C a +50°C (da 14°F a 122°F) a precisione ridotta	
Temperatura	Almacenamiento	-30°C a +70°C (-22°F a 158°F)	
	Calibración	20°C (68°F)	
	Coeficiente	<0,01% por °C de 5°C a 40°C (<0,006% por °F de 41°F a 104°F)	
	Carga estándar	0°C a +45°C (32°F a 113°F)	
	Carga rápida	+10°C a +45°C (50°F a 113°F)	
Humedad	Máx	90% humedad relativa a 40 °C (104°F) sin condensación	
Altitud	Máx	2000m (6562 ft.) según especificaciones completas de seguridad	
Seguridad		Según normativa EN61010-1 600V Categoría III	
Compatibilidad electromagnética		Conforme a IEC61326 incluyendo enmienda No.1	
Dimensiones		220 x 100 x 237 mm (8,6 x 4 x 9,5 pulg.)	
Peso		2.6 kg ($5^{3}/_{4}$ lb.) incluyendo módulo de batería	

Solución de problemas

Mensaje de error	Fallo	Acción necesaria
bAtt	Bajo nivel de carga en el módulo de batería principal.	Recargue la batería principal o sustitúyala con una batería cargada
_ _ _ _ _	Se ha producido un error durante la medición, ej.: se ha perdido el contacto en uno de los cabezales medidores.	Rectifique el error y repita la medición.
ERR 114	Fallo de suma de comprobación en RAM activada por batería. Este fallo se puede producir si el módulo de batería principal y la batería de reserva se descargan completamente.	Recargue la batería principal o sustitúyala con una batería cargada. Encienda el instrumento. Las constantes de calibración se recuperarán desde EEPROM.
ERR 115	Fallo de suma de comprobación en EEPROM. Las constantes de calibración de han perdido. El DLRO seguirá funcionando pero la variación de la precisión será generalmente de ± 2%. En el encendido, la pantalla mostrará la versión de software, con guiones a cada lado, ej.:. - 1.0 -	Envíe el instrumento para su recalibración.

Es posible reajustar su DLRO10X a los valores originales de fábrica. Esta acción borrará todos los resultados almacenados, ajustará el reloj a un valor y formato predeterminado y los demás ajustes se reajustarán a sus valores predeterminados. Esto se puede realizar manteniendo pulsado el botón ‘3’ en el teclado alfanumérico mientras se enciende el instrumento.

Accesorios

Accesorios suministrados de serie con el instrumento

Módulo de batería 7 Ah NiMH.	6430-101
"handspikes" dúplex DH4 (2), una con luces indicadoras. 1.2m/4pie	6111-503
Cargador de batería para funcionar con suministro 115/230 V, 50/60Hz.	6280-333
Adaptador tipo encendedor para cargar la batería.	6280-332
Guía del usuario.	6172-681
Documento de garantía.	6170-618

Accesorios opcionales a costo adicional

Estuche de transporte para el DLRO10 y todos los accesorios standard.	6380-138
Estuche de transporte para juegos de conductores opcionales.	18313
Derivador de calibración, 10 Ω, régimen de corriente 1 mA.	249000
Derivador de calibración, 1 Ω, régimen de corriente 10 mA.	249001
Derivador de calibración, 100 mΩ, régimen de corriente 1A.	249002
Derivador de calibración, 10 mΩ, régimen de corriente 10 A.	249003
Certificado de calibración para los derivadores, NIST	CERT-NIST
Puntas de recambio para las "handspikes" DH4. Punto de aguja	25940-012
Extremo en oblea	25940-014

Conductores de prueba opcionales a costo adicional

Conductores dúplex		
"handspikes" dúplex DH5 rectas (2), una con luces indicadoras.	2.5m/8pie	6111-517
"handspikes" dúplex (2) adecuadas para funcionar en sistemas de 600 V.	2.5m/8pie	6111-518
"handspikes" dúplex (2) con contactos helicoidales accionados por resorte	2m/7 pies	242011-7
	2.5m/8pie	6111-022
	5.5m/18pi	242011-18
	6m/20pies	6111-023
	9m/30pies	242011-30
"handspikes" dúplex rectas (2) servicio pesado con contactos fijos.	2m/7 pies	242002-7
	5.5m/18pi	242002-18
	9m/30pies	242002-30
Dúplex servicio pesado 5cm (2") Abrazaderas C (2).	2m/7 pies	242004-7
	5.5m/18pi	242004-18
	9m/30pies	242004-30
"handspikes" dúplex con puntas de aguja recambiables	2m/7 pies	242003-7
Dúplex 1.27 cm (½") Kelvin Clips (2).		
chapados en oro	2m/7 pies	241005-7
chapados en plata	2m/7 pies	242005-7
Dúplex 3.8 cm (1½") Kelvin Clips (2)	2m/7 pies	242006-7
	5.5m/18pi	242006-18
	9m/30pies	242006-30

Conductores sencillos

"handspikes" sencillas (2) para medición potencial.	2m/7 pies	242021-7
	5.5m/18pi	242021-18
	9m/30pies	242021-30
Clips de corriente (2) para conexiones de corriente.	2m/7 pies	242041-7
	5.5m/18pi	242041-18
	9m/30pies	242041-30

Reparación y garantia

El circuito del instrumento contiene dispositivos sensibles a estáticas, por lo que debe tenerse precaución al manejar la placa de circuito impreso. Si la protección de un instrumento ha sido afectada, éste no deberá ser usado sino que deberá ser devuelto para ser reparado por personal profesional competente. La protección es probable que se vea afectada si, por ejemplo, el instrumento muestra daños visibles, no ejecuta las mediciones previstas, ha sido almacenado durante un tiempo prolongado en condiciones desfavorables, o bien ha sido expuesto a difíciles condiciones de transporte.

Los nuevos instrumentos están garantizados durante 1 año a partir de la fecha de compra por el usuario.

Nota: Cualquier reparación o ajuste no autorizado invalidará automáticamente la garantía.

Reparación del instrumento y piezas de repuesto
Para requerimientos de servicio de instrumentos **DUCTER**®, póngase en contacto con:-

AVO INTERNATIONAL OU AVO INTERNATIONAL

Archcliffe Road	Valley Forge Corporate Center
Dover	2621 Van Buren Avenue
Kent, CT17 9EN.	Norristown, PA 19403
Inglaterra.	EE.UU.
Tél.: +44 (0) 1304 502243	Tél.: +1 (610) 676-8579
Fax: +44 (0) 1304 207342	Fax: +1 (610) 676-8625

o con una empresa de reparación aprobada.

Empresas de reparación aprobadas
Cierto número empresas de reparación de instrumentos independientes han sido aprobadas para efectuar trabajos de reparación en la mayoría de los instrumentos **DUCTER**®, usando piezas de repuesto **DUCTER**® auténticas. Consulte con el Distribuidor/Agente aprobado referente a piezas de repuesto, facilidades de reparación y asesoramiento sobre las mejores medidas a adoptar.

Devolución de instrumentos para reparación
La devolución del instrumento al fabricante para su reparación deberá hacerse a portes pagados y a la dirección adecuada. Simultáneamente, deberá ser enviada por correo aéreo una copia de la factura y de la nota de embalaje, con el fin de acelerar los trámites aduaneros. Si se requiere, será enviado al remitente un presupuesto de reparación mostrando el precio del flete de devolución y demás gastos originados, antes de comenzar los trabajos de reparación en el instrumento.

NOTA:

Las baterías son de níquel-metal-hidruro, y si son recambiadas el desecho de las pilas viejas deberá hacerse de acuerdo con los reglamentos locales.

Notes

Notes

AVO INTERNATIONAL

Archcliffe Road
Dover
Kent, CT17 9EN.
England.
Tel: +44 (0) 1304 502100
Fax: +44 (0) 1304 207342

PO Box 9007
Valley Forge
PA 19484-9007
U.S.A.
Tel: +1 (610) 676-8500
Fax: +1 (610) 676-8610

4271 Bronze Way
Dallas
TX 75237-1017
U.S.A.
Tel: +1 (800) 723-2861 (U.S.A. only)
Tel: +1 (214) 330-3203 (International)
Fax: +1 (214) 337-3038

MEGGER SARL
29 Allée de Villemomble
93340 Le Raincy
Paris, France
Tel: +33 (1) 43.02.37.54
Fax: +33 (1) 43.02.16.24

This instrument is manufactured in the United Kingdom. The Company reserves the right to change the specification or design without prior notice.

DUCTER, ***DLRO***, ***MEGGER*** and **AVO** are registered Trade Marks of **AVO INTERNATIONALLIMITED**. Copyright © **AVO INTERNATIONAL LIMITED**.

Part Number 6172-681 – Edition 4 – Printed in England – 08HH

The White Rubber Corporation
835 Cleveland Road
P.O. Box 230
Ravenna, OH 44266
Ph: 330-296-6497
Fax: 330-296-2254
www.whitesafetyline.com

01/04.6

The White Rubber Corporation

Operating Instructions
PD800W
Cordless Phasing Tester

(Bierer Patent No. 6,617,840 B2 and 6,734,658)
Other Patents Pending

Caution

The equipment covered in these operating instructions should be used by qualified employees, trained in and familiar with the safety related work practices, safety rules and other safety requirements associated with the use of this type of equipment. These instructions are not intended as a substitute for adequate training, nor do they cover all details or situations which could be encountered in relation to the operation of this type of equipment.

Warning

Use appropriate length live line tool for the voltage being worked and maintain minimum approach distances as outlined in OSHA 1910.269, table R-6. Do not let live tool fittings become grounded in any way. This may damage the equipment and cause personal injury.

Meter housing shall be considered non-insulating and shall not be used as an insulating tool. The high voltage probe assemblies shall be wiped clean prior to each use with a silicone impregnated cloth and kept clean and free of contaminates to prevent tracking on the outside of the probe, which could affect the accuracy of the meter and/or failure; resulting in personal injury and/or equipment damage.

Notice

Before operating this equipment, read, understand, and follow all instructions contained in this manual. Keep instructions with equipment.

TABLE OF CONTENTS

Design and Function 1

Set Up -Testing and Inspection 2

Battery Replacement 2

Phase Angle Measurements 3
Direct Contact from 208V to 69kV
Including Capacitive Test Points

Delta/Wye Transformation 3

Phase Angle Measurements 4
Non-Contact from 69kV to 800kV

Testing Phase Sequence 5

Voltage Indications URD and Overhead 6
Direct Contact from 4kV to 69kV

Reference Probe as Voltage Detector 7
Direct Contact
Non-Contact

FCC Instructions to the User 8

FCC Compliance Information Statement 8

Parts and Accessories 9

PARTS AND ACCESSORIES

Part No.	Description
81280TBALB	15 - 25kv Bushing Adapter
81280LHM	Hook Probe Adapter
81280LPM	Straight Probe Adapter
3403	Quick Change to Universal Adpater
3402TH5811	Quick Change to Grip All Adapter
10022CHL	Handle w/threaded Ferrule and Cap (2 required*)
10022HHSL	Handle w/threaded Ferrule and Ferrule w/stud (2 or 4 required*)
PD800ANT	Antenna for Reference Probe or Meter Probe
PD800SH2	Support Hook 2 ft., 69kV to 600kV
PD800SH4	Support Hook 4 ft., above 600kV

* Nominal one inch in diameter and two feet in length. Handle assemblies may be 2, 4, or 6 feet in length.

NOTES:

FCC Instructions to the User:

This equipment (Reference Probe) has been tested and found to comply with the limits for a Class A digital device, pursuant to part 15 of the FCC rules. These limits are designed to provide reasonable protection against harmful interference in a commercial environment. This equipment generates, uses, and can radiate radio frequency energy and, if not used in accordance with this instruction manual, may cause interference to radio communications. Operation of this equipment in a residential area is likely to cause interference in which case the user is encouraged to try to correct the interference by one or more of the following measures:

1. Reorient or relocate the equipment.
2. Increase the separation between the equipment and the radio service that is experiencing the interference.
3. Consult the dealer or an experienced radio technician for help.

The user is cautioned that changes or modifications made to the equipment or antenna could void the user's authority to operate this equipment.

FCC Compliance Information Statement

Trade Name:	Cordless Phasing Tester
Model Number:	Bierer PD800W
Compliance Test Report Number:	B31202D2
Compliance Test Report Dates:	12/01/03 & 12/02/03
Responsible Party:	Bierer & Associates, Inc.
Address:	183 Elton Walker Rd., Blythewood, SC 29016
Telephone:	803-786-4839

This equipment (Meter Probe) has been tested and found to comply with limits for a Class B, RF Receiver pursuant to Part 15 of the FCC rules. These limits are designed to provide reasonable protection against harmful interference in a residential installation. This equipment generates, uses, and can radiate radio frequency energy and, if not used in accordance with the instructions, may cause harmful interference to radio communications. However, there is no guarantee that interference will not occur in a particular situation. If the unit does cause harmful interference to radio or television, please refer to the three steps listed above under "FCC Instructions to the User".

Design and Function

The cordless PD800W is designed to operate similar to a conventional phasing tester but is safer and easier to use because it does not require an interconnect cable. The unit consists of a Reference Probe (transmitter) and a Meter Probe (receiver) and will operate reliable at distances up to 70 feet. The phasing tester is usable from 208 volts to 800kV.

Each unit has a five position switch for the following functions:

- **Off -** Unit off for storage or transit.
- **Deg -** Phase angle measurement in degrees for use on Secondary, URD and Overhead.
  Direct contact from 208 volts to 69kV (**Including capacitive test points**).
  Non-contact from 69kV to 800kV (without the use of extension resistors).
- **URD -** Phasing Underground Residential Distribution with Voltage Indications.
  Direct contact from 4kV to 35kV (**not for capacitive test points**).
- **OH -** Phasing Over-Head conductors with Voltage Indications.
  Direct contact from 4kV to 69kV.
- **T -** Test basic meter function and displays the internal 9V battery voltage.

Voltage indications and degree readings are supplemented with phase indicator lights on the Meter Probe for dual confirmation of the phase relationship between the Reference Probe and Meter Probe.

- **White** phase indicator light indicates an in-phase condition.
- **Blue** phase indicator light indicates out-of-phase condition of 120 degrees.
- **Red** phase indicator light indicates an out-of-phase condition of 240 degrees.
- **Yellow "DY"** blinking indicator light indicates a Delta/Wye transformation (30 degree phase shift) in conjunction with one of the other three phase indicator lights.

Note 1: For best results, always hold the Reference Probe and Meter Probe perpendicular to the conductors being tested and away from all other conductive surfaces such as adjacent phases, neutrals and grounded structures. Maintain a minimum distance of two feet between the body of the probes and all other conductors or grounded surfaces. Maintain a minimum distance of two feet between your hands and the body of the probe regardless of the voltage being tested. Never hold the tester with rubber gloves when in use.

Note 2: When Phasing on URD transformer bushings use Safety Line 8128TBALB bushing adapters on both the Reference Probe and the Meter Probe.

PD800W Set Up - Testing and Inspection

Testing the Meter Probe:
The Meter Probe completes a self check each time the selector switch is moved from one position to another. It displays the number 510 +/-5 (full scale) and blinks 0, 120, 240 phase sequence indicator lights followed by a blinking DY (Delta Wye Transformation) indicator light.

Test:
The internal 9V battery voltage may be checked by turning the rotary selector switch to the **T** position and holding for several seconds until the indicator lights stop blinking. If the battery voltage displayed is less than 8 volts, shown on the meter as 80, the battery should be replaced. A standard 9 volt battery is located behind the live line tool attachment.

Testing the Reference Probe:
Turn the Meter Probe selector switch to the **URD** or **OH** position. The results of the Reference Probe self checks will be displayed on the Meter Probe. Each time the selector switch on the Reference Probe is moved from one position to another, the number 510 will be displayed on the Meter Probe for several seconds.

Test:
The internal 9V battery is checked by turning the selector switch to the **T** position and holding for several seconds. The internal battery voltage of the reference will be displayed on the Meter Probe. If the battery voltage displayed on the Meter Probe is less than 8V, shown on meter as 80, the battery should be replaced. A standard 9 volt battery is located behind the live line tool attachment.

Physical Inspection:
Both the Reference Probe and Meter Probe should be clean and free of dirt, grease and other contaminants. The unit should not be used if any portion of either the Meter Probe or the Reference Probe is cracked or damaged in any way.

Battery Replacement
A standard 9 volt battery is located behind the 5/8" x 11" threaded live line tool fitting on the probe housing. Two flat edges are furnished for use with a wrench or slip joint pliers to remove and install the fitting from the probe housing. To avoid damaging the antenna, it is recommended that the antenna be removed prior to unscrewing the live line tool fitting from the housing. To remove the antenna, rotate counter clockwise and reinstall finger tight.

3. Phase-to-Ground Voltage Indication - Direct Contact from 4kV-to-69kV Does not include Capacitive Test Points
The Meter Probe may be used in the **URD** or **OH** position as a stand alone digital voltage detector to obtain a phase-to-ground voltage indication by touching the energized conductor directly. When using the Meter Probe in this manner, the Reference Probe must be switched off and should be stored in the padded box.

4. Reference Probe as a Voltage Detector - Direct Contact from 208V-to-69kV Including Capacitive Test Points
The Reference Probe may be used as a stand alone voltage detector by touching the energized conductor or capacitive test point directly. The **White** indicator light will be on if the voltage is equal to or greater than the threshold valued below (**See Note 1, Pg. 2**).

a) **Deg** position 120V
b) **URD** or **OH** position 800V

Use **(a)** above for capacitive test points and voltages up to 480V and use **(b)** above for voltages 600V-to-69kV

5. Non-Contact from 69kV-to-800kV
The Reference Probe may be used as a non-contact stand alone voltage detector. The presence of an electric field at the minimum approach distance will cause the **White** indicator light to come on. **(See OSHA 1910.269, Table R-6 for minimum approach distance)**

Deg	Position Electric field greater than 120V at the minimum approach distance.
URD or **OH**	Electric field greater than 800V at the minimum approach distance.

Voltage Indications URD and OH - Direct Contact from 4kV-to-69kV
(Does not include Capacitive Test Points)

By design, the PD800W consists of two individual direct contact voltage detectors which communicate with each other via a radio link. When used to display voltage in the **URD** or **OH** positions, the readings are a composite of the actual voltage on the line and the capacitive coupling between the live line tool fitting (quick change, universal, or grip all) to other potentials in the vicinity.

If the live line tool fitting is close to another phase, ground or other voltage source, the reading will be higher than nominal. If the live line tool fitting is close to conductors or equipment of the same phase, the reading will be lower than nominal. In the PD800W, the phase to phase voltage indications are derived from the two phase to ground voltages present on the Reference Probe and the Meter Probe. The resulting phase to phase reading will be proportional to the phase to ground readings.

Example: If due to field conditions both the Reference Probe and Meter Probe sense 9kV phase-to-ground on a 7.2kV phase to ground system, the phase-to-phase indication would be 16kV rather than 12.4kV. In this example, the meter is simply indicating that the two conductors are out of phase. The out of phase condition will be confirmed with the presence of a **Blue** or **Red** indicator light.

Note 4: Higher than nominal reading in the OH position can sometimes be lowered closer to nominal by retesting in the URD position, especially when used in close proximity to neutrals and other grounded surfaces.

Inspect and Test the Unit. Attach the Reference Probe and/or the Meter Probe to the appropriate length live line tool for the voltage being tested. Minimum 2 feet **(see Note 1 on Pg. 1)**

1. Phase-to-Phase Voltage Indication - Direct Contact from 4kV-to-69kV
Does not include Capacitive Test Points
Nominal phase-to-phase voltage indications may be obtained in the **URD** or **OH** position by touching one energized phase conductor with the Reference Probe and another energized phase conductor with the Meter Probe. **(See Note 1 on Pg. 2)**

2. Zero-Voltage Indication - Direct Contact from 4kV-to-69kV
Does not include Capacitive Test Points
Nominal zero-voltage indication may be obtained in the **URD** or **OH** position by touching the Reference Probe and Meter Probe to energized conductors of the same phase and voltage. **(See Note 1, Pg. 2)**

> **Warning!** When in operation, the selector switches on the Reference Probe and Meter Probe must be in the same position. Failure to do so could produce false readings, resulting in equipment damage and/or personal injury. Always check the selector switch on both units before and after each test.

Phase Angle Measurements
Direct Contact from 208V to 69kV
Including Capacitive Test Points

1. Inspect and test the PD800W as described in the Meter Setup Section, Pg. 2.
2. Attach the Reference and Meter Probe to the appropriate length live line tool for the voltage being tested. Minimum 2 feet **(see Note 1 on Pg. 1)**.
3. Set the selector switch on both probes to the **Deg** position.
4. With the Reference Probe, touch all conductors one at a time to verify all of the phases are energized. **(See Note 2 on Pg. 1)**
5. The **White** phase indicator light will be on if there is at least 120 volts present on the conductor.
6. Touch both the Reference Probe and the Meter Probe to a single (the same) energized conductor. The Meter Probe should indicate near zero degrees on the digital display and show a **White** zero degree indicator light. Two **White** lights on both probes indicate an in phase condition. **(See Note 2 on Pg. 1)**
7. Leave the Reference Probe on the first energized conductor. Touch the Meter Probe to another energized conductor.
8. If the conductors are in phase, the Meter Probe should indicate near zero degrees on the digital display and show a **White** zero degree indicator light.
9. If the conductors are out of phase, the Meter Probe will indicate either of the following:
    a. Nominal 120 degrees and a **Blue** 120 degrees indicator light or
    b. Nominal 240 degrees and a **Red** 240 degrees indicator light .
10. Retest PD800W as described in the Meter Setup Section, Pg. 2.

Delta Wye Transformation

The PD800W provides an additional feature of flagging a Delta Wye Transformation with a blinking yellow indicator light labeled "DY".
Expected phase angles when phasing a three-phase system are 0 degrees, 120 degrees, and 240 degrees. The PD800W continuously monitors all phase angles between the Reference Probe and the Meter Probe when used in either the **Deg**, **URD**, or **OH** mode. If the phase angle deviates more than +/-20 degrees from any of the three expected values of 0, 120, or 240 degrees the **Yellow** "DY" light will blink.

> **Warning!** When in operation, the selector switches on the Reference Probe and Meter Probe must be in the same position. Failure to do so could produce false readings, resulting in equipment damage and/or personal injury. Always check the selector switch on both units before and after each test.

Phase Angle Measurements
Non-Contact from 69kV-to-800kV
Without Extension Resistors

1. Inspect and test the PD800W as described in the Meter Setup Section, Pg. 2.
2. Attach the Reference and Meter Probe to appropriate length live line tools for the voltage being tested. Minimum 2 feet **(See Note 1, on Pg. 2).**
3. Select the **OH** position on the Reference Probe.
4. Bring the Reference Probe to a distance from each conductor that is close to the minimum approach distance for the voltage being tested to verify all conductors are energized. **(See OSHA 1910-269, Table R-6 for a minimum approach distance).**
5. The **White** phase indictor light will be on if the electric field present at the minimum approach distance equals at least 600 volts.
6. **Reset the selector switches on both probes to the Deg position.**
7. Bring both the Reference Probe and Meter Probe close to the minimum approach distance of a single (the same) conductor. The Meter Probe should indicate near zero degrees on the digital display and show a **White** zero degree indicator light. **White** lights on both probes indicate an in phase condition.

NOTE 3: On lines 69kV to 600kV the Reference Probe may be suspended from the conductor with optional insulated support hook attachment PD800SH2. Above 600kV use PD800SH4. Meter Probe must be used in non-contact mode as described above in Section 7.

8. Leave the Reference Probe in position with the first conductor. Bring the Meter Probe close to the minimum approach distance of another energized conductor.
9. If the conductors are in phase, the Meter Probe should indicate near zero degrees on the digital display and show a **White** zero degree indicator light.
10. If the conductors are out of phase, the Meter Probe will indicate either of the following:
    a) Nominal 120 degrees and a **Blue** 120 degrees indicator light or
    b) Nominal 240 degrees and a **Red** 240 degrees indicator light
11. Retest the PD800W as described in the Meter Setup Section, Pg. 2.

Warning! When in operation, the selector switches on the Reference Probe and Meter Probe must be in the same position. Failure to do so could produce false readings, resulting in equipment damage and/or personal injury. Always check the selector switch on both units before and after each use.

TESTING PHASE SEQUENCE

Phase sequence will be either: (1 - 2 - 3) or (3 - 2 - 1)
(A - B - C) or (C - B - A)

Phase sequence is the order in which the voltages of a three phase system rise and fall. Only two sequences are possible, sometimes referred to as Clockwise or Counter Clockwise rotation. However, three different physical connections are possible to achieve each sequence. Any one of the phases of a three-phase system may be assigned the status of leading phase. This convention is currently left to the discretion of the electric utility.

Sequence:	**(1 - 2 - 3)**		
	(A - B - C)	**A - B - C**	**A - B - C** - A - B - C - A - B - C
	or	**B - C - A**	B - C - **A - B - C** - A - B - C - A
	or	**C - A - B**	C - A - B - C - **A - B - C** - A - B
Sequence:	**(3 - 2 - 1)**		
	(C - B - A)	**C - B - A**	**C - B - A** - C - B - A - C - B - A
	or	**B - A - C**	B - A - **C - B - A** - C - B - A - C
	or	**A - C - B**	A - C - B - A - **C - B - A** - C - B

Procedure:

1. Inspect and test the PD800W as described in the Meter Setup Section, Pg. 2.
2. Attach the Reference Probe and the Meter Probe to the appropriate length live line tools for the voltage being tested. **(See Note 1 on Pg. 2)**
3. Set the selector switches on both probes to the **Deg** position.
4. Touch or approach "1" ("A") phase with the Reference Probe.
5. Touch or approach "2" ("B") phase with the Meter Probe.
6. Sequence (1 - 2 - 3)
   (A - B - C) will be indicated by an nominal 120 degrees on the digital display and a **Blue** 120 degree indicator light.
7. Sequence (3 - 2 - 1)
   (A - B - C) will be indicated by a nominal 240 degrees on the digital display and a **Red** 240 degree indicator light.
8. Retest the PD800W as described in the Meter Setup Section, Pg. 2.

Warning! When in operation, the selector switches on the Reference Probe and Meter Probe must be in the same position. Failure to do so could produce false readings, resulting in equipment damage and/or personal injury. Always check the selector switch on both units before and after each use.

VIMAP R2000 MAINTENANCE & SERVICES

Patented Technology:
WO 96/40841
PCT/RU96/00142
U.S.Pat.No. 5,942,121
Russian Pat.no.2123512
Romanian Pat.Appl.No. 97-00252
European Pat. Appl.No. EP 0 790 290 A1

REVITALIZATION OF OIL-PAPER ISOLATION SYSTEM IN ENERGY TRANSFORMERS

VIMAP R2000

- EXTENDING LIFE TIME OF TRANSFORMER
- INCREASING RELIABILITY OF TRANSFORMER OPERATION

INTRODUCTION

Lifetime of transformer is, in fact, life time of oil-paper isolation system. Most often isolation system of transformer consists of liquid isolation (transformer oil) and solid isolation paper/cellulose). Isolation oil provides cca 80% of dielectric density of transformer. Majority of breakdowns (about 85%) occurs because of deficiency in isolation system.

Degradation of paper isolation depends on several factors, most important being:

- **Thermal degradation**
(Thermal degradation of paper and oil)
- **Oxidation degradation**
(Different states of oxygen cause degradation of paper and oil – without oxygen there is no aging)
- **Hydrolytic degradation**
(Influence of acids and water, products of oxidation of oil and paper, disintegrates paper)

Elimination of water, oxygen and acids and all the other products of aging, considerably prolongs lifetime of transformer and increases reliability of the network.
Application of technological procedure **VIMAP R2000**, eliminates by method of adsorption, all polar molecules – products of aging in isolation oil. Dispersal of polar molecules between oil and paper is constant.

Elimination of products of aging from oil initiates the transition process of these polar molecules from paper to oil (so that the relation remains constant- by Henry's law).

Each system of oil-paper isolation in energy transformers can be purified from products of aging - revitalized in the period of 15-45 days by VIMAP R2000 method

- **Revitalization of the oil-paper isolation system is performed on-line by VIMAP R2000 method (without interruption of transformer's operation)**
- **It is not necessary to empty oil out of transformer**
- **It is not necessary to vacuum the transformer**
- **Regeneration of oil is done by recirculation**
- **VIMAP R2000 device is constructed to provide safe operation during revitalization of transformer connected in the network.**

GUARANTEED RESULTS

If there is no sediment and free water, following results, after **VIMAP R2000** procedure, are guaranteed (IEC 296):

Oil characteristics	Unit	REGULAR TREATMENT	PROFOUND TREATMENT
Dielectric disipation factor, tan delta (90°C)	x 10^{-3}	< 10	< 5
Neutralization number	mg KOH/g of oil	< 0.03	< 0.01
Interfacial tension (20°C)	mN/mm	> 35	> 40
Dielectric strength	kV/cm	> 300	> 300
Water content (20°C)	ppm	< 10	< 5
Macroparticles*	No.	< 13000	< 7000
Oxidation stability**	h	> 120	> 160

* > 5 microns in 100 ml of oil
** For inhibited oils, sample taken at the outlet of the machine)

Content of water in paper isolation:

- **from 1,0 % decreases to < 0,5 %**
- **from 2,5 % decreases to < 1,5 %**
- **from 3,5 % decreases to < 2,0 %**

- **VIMAP R2000 PROFOUND TREATMENT** procedure differs from regular in duration of oil treatment.

Advantages

Application of **VIMAP R2000** procedure, replacement of oil by new or regenerated is unnecessary and also very costly. Advantages of **VIMAP R2000** method and disadvantages of oil replacement are following:

a) Most important is that by replacement of oil nothing is achieved, as the paper stays "polluted" by products of aging and by water. By Henry's law, polar molecules from the paper will again penetrate in new oil. Rinsing interior of transformer very futile effect is achieved, as the access of rinsing oil film is possible only to a max of 60% of interior surface of transformer (depending on construction of the transformer). Also, about 10% of oil volume remain "imprisoned" in paper isolation. This remaining oil contains polar molecules that can considerably diminish quality of the new oil. By replacement of oil sediment in cooling fins and between the windings is not eliminated. This remaining sediment will dissolve in new oil and activate again oxidation process.
b) High price of new oil.
c) Complicated procedure of replacement is eliminated (pouring out, transport, engagement of transportation facilities – vehicle, people)
Procedure of replacement can be done only with transformer out of operation.
d) For rinsing the transformer's interior you need large quantities of new oil.
e) It is necessary to vacuum the transformer before filling it with new oil.
f) Danger during transport of new oil and during filling.
g) Losses because of switching off the transformer (between 8h to 38h, depending of transformer capacity).

After revitalization of transformer by **VIMAP R2000** method, purified oil has quality of new-unused oil and paper stays completely clean and dry.

Features

Process of revitalization VIMAP R2000 is performed by recirculation of isolation oil between the transformer and adsorbent tanks. This process lasts 15 to 45 days, long enough that by Henry's law purified oil "extracts" polarized molecules from solid -paper isolation..

During whole process the transformer is connected to electric network and performs its function. Adsorbent with which polarized molecules are removed is absolutely neutral to isolation oil and has enormous adsorption capacity at all working temperatures of transformer, so that with 1000 kg of adsorbent, 20t to 60t of isolation oil in transformer could be led to the quality of new. Reactivation of adsorbent, if necessary, could be done easy and fast, without interrupting transformer's operation. Depending of the capacity of the transformer and degree of oil pollution, reactivation of adsorbent is done three times at the most. Adsorbent can be reactivated several hundred times.

Technical data

- Flow capacity 3000 lit/h
- El. energy consumption 3-4 kW (depending on environment temperature)
- Consumption of el. energy for reactivation of adsorbent 10-30kW

Optional:

- VIMAP R2000 can be placed in container - without trailer or on trailer;
- Reactivation of adsorbent could be automatic or semiautomatic;
- In case of semiautomatic reactivation of adsorbent one unit for reactivation can attend several units for revitalization;
- Chamber for oil degassing.

References:

a) 400 MVA transformer 37 years in operation in TPP Isalnita, Craiova, Romania. The transformer oil content is 57 tons.

Oil-spray method was used for drying prior to oil replacement. After energizing and heating, ageing products developed in solid insulation reached oil affecting tgä to rise to 89,0 x 10^{-3}.

Conventional methods applied failed in yielding satisfactory results.

At the owner`s request, new method was applied and oil tan delta value was brought down to 6,7 x 10^{-3}. Oil treatment duration was 25 days.
The oil was uninhibited and after testing, at the customer`s request no inhibiting agent was added, as it was concluded that no such measure was necessary.

The results after treatment:
- Tan delta 6.7 x 10^{-3}
- Neutralization no. 0.017 mgKOH/g of oil
- Dielectric strength 260 kV/cm

The results after 12 months:
- Tan delta 16,3 x 10^{-3}
- Neutralization no. 0.019 mgKOH/g of oil
- Dielectric strength 260 kV/cm

b) 200 MVA transformer with 56 tons oil content in ARAD substation, Romania.

Tan delta was 55x10^{-3}. The transformer owner requested for the transformer to have the following characteristics after testing:

-Dielectric strength: ≥ 280 kV/cm
-Oxygen content: ≤ 0.2 %
-Tan delta at 90^0C: ≤ 14 x 10^{-3}
-Neutralization no.: ≤ 0.02 mg KOH/g of oil
-Interfacial tension (20^0C): ≥ 38 mN/m
-Macroparticles no.(>5microns): ≤ 7000
-Isolation resistance ($R_{10\ min}$) R_{60}/R_{15}
HV – LV ≥ 2000 MOhm k ≤ 1.5
HV – mass ≥ 2500 MOhm k ≤ 1.5
LV – mass ≥ 1500 MOhm k ≤ 1.6

After 30 days application of our adsorbent all requirement were met. The treatment was carried out with two adsorbents applied to inhibited oil with 0.3 % inhibiting agent addition.The results after treatment:

-Dielectric strength: 320 kV/cm
-Oxygen content: 0.1 %
-Tan delta at 90^0C: 4.7 x 10^{-3}
-Neutralization no.: 0.005 mg KOH/g of oil
-Interfacial tension at 20^0C: 44 mN/m
-Macroparticles no.(>5microns): 7000
-Isolation resistance ($R_{10\ min}$) R_{60}/R_{15}
HV – LV = 3182 MOhm k = 1.5
HV – mass = 3229 MOhm k = 1.4
LV – mass = 2504 MOhm k = 1.5

VIMAP d.o.o.
24, Hadzi Djerina Str.
11000 Belgrade
Yugoslavia

Phone: + 381 63 257 853
Fax: + 381 11 493 801
E-mail: vimap@eunet.yu
http://www.vimap.com

COOPER INSTRUMENTS & SYSTEMS

DFI 100
Hand-Held Digital Signal Conditioner

USER'S GUIDE

www.cooperinstruments.com
PH: 540-349-4746 • FAX: 540-347-4755

TABLE OF CONTENTS

Section Page
Introduction 3
Specifications 3
Signal Conditioner 3
Display 3
Physical Characteristics 3
Description 4
Calibration and Setup 4
Initial Setup 4
Transducer Hookup 5
Transducer Setup 5
Warranty 8

ILLUSTRATIONS

Figure 1- The Front Panel 6
Figure 2- Inside Rear Cover 7

1.0 INTRODUCTION

The Cooper Model DFI-100 is a complete hand-held portable signal- conditioner/indicator for use with strain-gage transducers. It provides excitation for such transducers, amplifies the signal and scales the output in engineering units. It can indicate this output in a continuous fashion (tracking mode) or display only the highest peak value of the variable (peak mode) using a switch to make the selection. The display is 3-1/2 digit LCD unit; so long battery life is possible. A 9-volt transistor radio battery is used. A low-battery warning is displayed when the battery has dropped below the required voltage.

Though Model DFI-100 is small, it is a full signal conditioner, providing adjustment for zero, span, scaling and switch-selected gain. It is useable with a wide variety of transducers types, and is the ideal instrument for the technical person who must travel and take readings from a wide variety of sensors.

2.0 SPECIFICATIONS

2.1 Signal Conditioner

Excitation Voltage (To Transducer)	2.46 VDC
Minimum Transducer Impedance	120 ohms
Input Signal Sensitivity for Full-Scale Indication	0.5 to 8 mV/V
Peak Detector Bleed-Off Rate	<0.01% Per second

2.2 Display

Type	4-1/2 digits LCD
Features	Lo-Battery Indication Blinking Overrange 0.4” high numeral
Conversion Rate	3 readings per second

2.3 Physical characteristics

Size	3.6” wide x 6.75” long x 1.75” high
Case Material	ABS impact-resistant
Connection Method	Mini Din Connector
Power	9-volt transistor radio Battery, Mallory MN1604 or equiv.
Battery Life	15 hours minimum With 350-ohm Transducer Impedance

3.0 DESCRIPTION

3.1 Front Panel Controls

ON/OFF SWITCH The ON/OFF switch controls Power to the instrument from the battery.

PEAK/TRACK Switch The PEAK/TRACK switch selects the mode of operation of the instrument. In the PEAK position, the instrument will retain and display the value of the most positive value detected during operation. To reset the peak, merely switch the PEAK/TRACK switch to the TRACK position. (A slight decay of peak value displayed over an extended period of time is normal). In the TRACK mode, the instrument's display will continuously follow the input signal variations.

ZERO POTENTIOMETER The ZERO potentiometer is used to obtain a zero indication, thus canceling drifts or offsets that could exist in the instrument or transducer.

SPAN POTENTIOMETER The SPAN potentiometer adjusts the fine gain or the amplifier. It is used to make certain that the reading obtained from any transducer can be scaled to the proper level.

DISPLAY The 4-1/2 (3-1/2 active) digit LCD display appears through a window on front panel. The LO-BAT indication appears in the upper-left of the display and indicates when the battery is getting low.

TERMINALS On the end of the instrument near the top of the front panel is a Mini Din female connector for the transducer connection.

Rear Panel -- The access door for the battery is located on the rear of the instrument. To replace the battery, slide this door in the direction
indicated by the arrow. When changing batteries, remove the clip from the battery carefully, in order to protect the wiring.

4.0 CALIBRATION AND SETUP

4.1 Initial Setup

If your DFI 100 was purchased with a Cooper transducer and Assembly & Calibration, the system is calibrated. You may skip this section.

Remove the rear panel from the DFI 100 by removing the four corner screws and carefully lifting the rear off. Use caution not to strain the wires running to the battery compartment.

Decimal Point Setting – Determine the desired location for the decimal point on the digital display. See Figure 2. Connect the proper decimal point jumper, as shown**. CAUTION! Use only one jumper!**

Extra (Dummy) Zero – It is possible to have an extra zero digit at the end of the displayed value, if desired. Decide if the extra zero is required on the display. Place a jumper so that this digit is on or off, as shown in Figure 2.

Coarse Gain – Determine the transducer's full-scale output. The DFI 100 will give a full-scale indication for transducers with outputs from 0.5 to 8.0 millivolts per volt. Figure 2 indicates the switch selections for eight selector switches, which set the coarse gain of the DFI 100. Table 1 indicates the switch positions needed to accommodate the various millivolt-per-volt inputs.

This completes the initial setup of the instrument for any transducer. Do not replace the rear panel, yet

Table 1 -- Switch Settings

mV/V Values	Switches On
0.5	1,2,3,7
.75	1,3,7
1	1
1.5	3,5,7
2	2
2.5	4,7
3	3
3.5	6,8
4	4
5	5
6	6
7	7
8	8

4.2 Transducer Hookup

Connect the transducer to the DFI 100 using the Mini Din Connector shown in Figure 1. Energize the DFI 100, and allow the transducer a few seconds to warm up, thus stabilizing any zero shift.

4.3 Transducer Setup

a. Turn the SCALING potentiometer fully clockwise (about 25 turns).

b. With no load applied to the transducer, adjust the front-panel ZERO control to give a zero indication on the display.

c. With a known load close to full-scale to the transducer, adjust the SPAN potentiometer so that the display reads 1999 (or 19990 if the extra digit is turned on.) An alternative to this step is to use the SHUNT CAL switch to stimulate a load, adjusting the SPAN control so that the display reads value calculated by the following:

$$\frac{\text{Shunt Cal Output mV/V} \times 19990 \text{ (or 1999)}}{\text{Full-Scale Output mV/V}}$$

These values are normally found on the calibration sheets which are included with the transducer by most manufacturers. The value of the SHUNT CAL resistor that the manufacturer recommends is also on this sheet. It is important that the same value resistor be used when using the SHUNT CAL method.

d. Recheck the ZERO and again apply the load or SHUNT CAL.

e. With the full-load applied; adjust the SCALING potentiometer to the desired full-scale engineering unit value. If the SHUNT CAL technique is being used, adjust for the value calculated by:

$$\frac{\text{Shunt Cal Output mV/V} \times \text{Full-Scale Engineering Units}}{\text{Full-Scale Output mV/V}}$$

f. Replace the rear panel.

Calibration and setup are now complete.

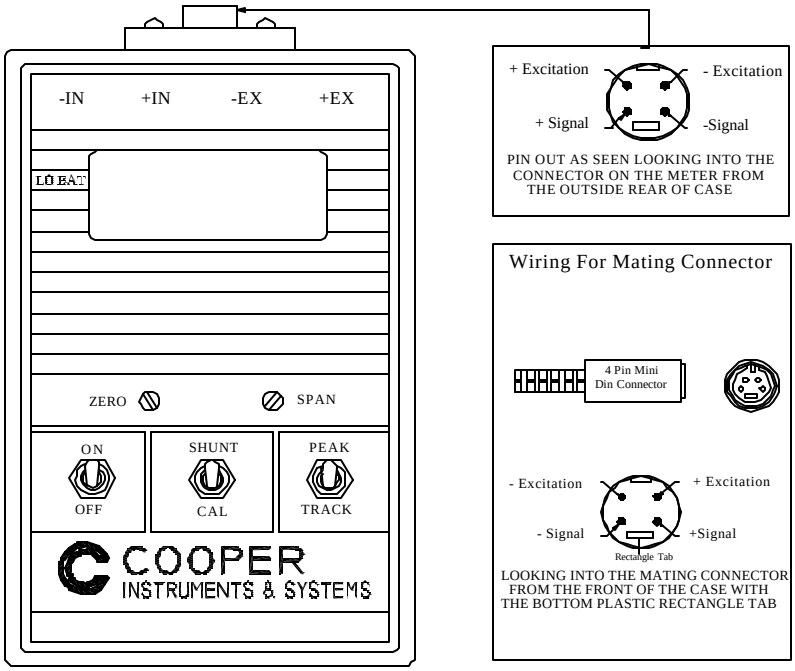

Figure 1- The Front Panel

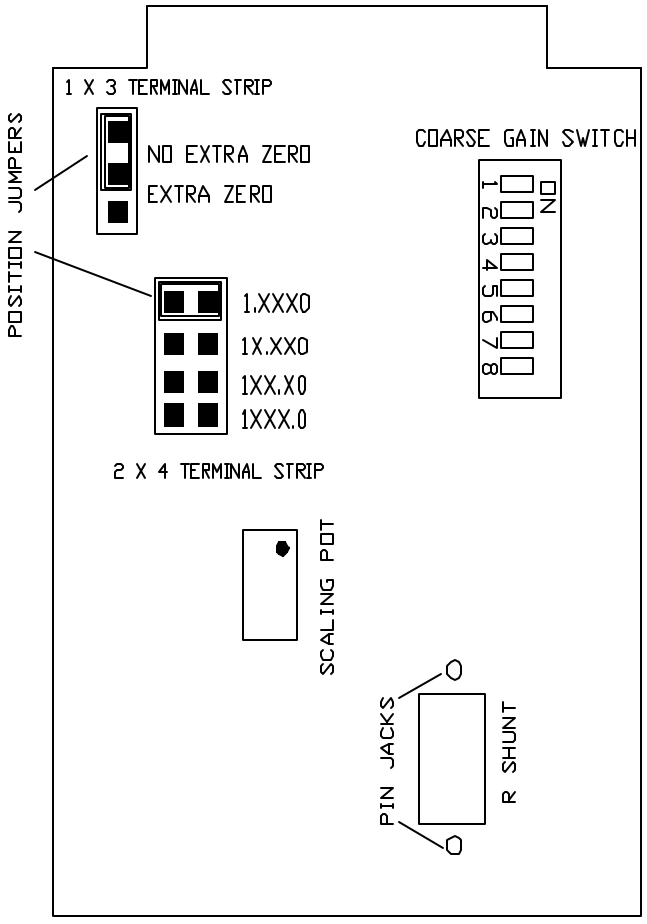

Figure 2- Printed Circuit Board Locations

WARRANTY REPAIR POLICY

LIMITED WARRANTY ON PRODUCTS

Any of our products which, normal operating conditions, proves defective in material or in workmanship within one year from the date of shipment by COOPER, will be repaired or replaced free of charge provided that you obtain a return material authorization from COOPER and send the defective product, transportation charges prepaid with notice of the defect, and establish that the product has been properly installed, maintained, and operated within the limits of rated and normal usage. Replacement or required product will be shipped F.O.B. our plant. The terms of this warranty do not extend to any product or part thereof which, under normal usage, has an inherently shorter useful life than one year. The replacement warranty detailed here is the buyer's exclusive remedy, and will satisfy all obligations of COOPER whether based on contract, negligence, or otherwise. COOPER is not responsible for any incidental or consequential loss or damage which might result from a failure of any and all other warranties, express or implied, including implied warranty of merchantability or fitness for particular purpose. Any unauthorized disassembly or attempt to repair voids this warranty.

OBTAINING SERVICE UNDER WARRANTY

Advance authorization is required prior to the return to COOPER. Before returning the item either write to the Repair Department c/o Cooper Instruments 400 Belle Air Ln., Warrenton, VA 20186, or call (540) 349-4746 with**:** 1) a part number; 2) a serial number for the defective product; 3) a technical description of the defect; 4) a no-charge purchase order number (so products can be returned to you correctly); and 5) ship and bill addresses. Shipment to COOPER shall be at buyer's expense and repaired or replacement items will be shipped F.O.B. our plant in Warrenton, Virginia. Non-verified problems or defects may be subject to a $125 evaluation charge. Please return the original calibration data with the unit.

REPAIR WARRANTY

All repairs of COOPER products are warranted for a period of 90 days from date of shipment. This warranty applies only to those items that were found defective and repaired, it does not apply to products in which no defect was found and returned as is or merely recalibrated. Out of warranty products may be capable of being returned to the exact original specifications or dimensions.

> * Technical description of the defect: In order to properly repair a product, it is absolutely necessary for COOPER to receive information specifying the reason the product is being returned. Specific test data, written observations on the failure and the specific corrective action you require are needed.

AVTM246004
February 2001

AVO INTERNATIONAL

Instruction Manual

BITE 2 and BITE 2P

Battery Impedance Test Equipment

***BITE 2**: Catalog No. 246002B*

***BITE 2P**: Catalog No. 246004*

HIGH-VOLTAGE EQUIPMENT
Read this entire manual before operating.

APARATO DE ALTO VOLTAJE
Ante de operar este producto lea este manual enteramente.

BITE 2 and BITE 2P

Battery Impedance Test Equipment

Instruction Manual

Copyright© 2001 by AVO International. All rights reserved.

The information presented in this manual is believed to be adequate for the intended use of the product. If the product or its individual instruments are used for purposes other than those specified herein, confirmation of their validity and suitability must be obtained from AVO International. Refer to the warranty information below. Specifications are subject to change without notice.

WARRANTY

Products supplied by AVO International are warranted against defects in material and workmanship for a period of one year following shipment. Our liability is specifically limited to replacing or repairing, at our option, defective equipment. Equipment returned to the factory for repair must be shipped prepaid and insured. Contact your AVO representative for instructions and a return authorization (RA) number. Please indicate all pertinent information, including problem symptoms. Also specify the serial number and the catalog number of the unit. This warranty does not include batteries, lamps or other expendable items, where the original manufacturer's warranty shall apply. We make no other warranty. The warranty is void in the event of abuse (failure to follow recommended operating procedures) or failure by the customer to perform specific maintenance as indicated in this manual.

AVO International
Valley Forge Corporate Center
P.O. Box 9007
Valley Forge, PA 19485-1007
610-676-8500 (Telephone)
610-676-8610 (Fax)
www.avointl.com
battery@avointl.com

AVO INTERNATIONAL

Contents

1 INTRODUCTION....1-1
About the BITE 2 and BITE 2P… 1-1
How the BITE 2/2P Works 1-2
Applications for the BITE 2/2P....1-3
BITE 2/2P Measurements 1-4
Upon Receipt of the BITE 2/2P 1-4
Safety First 1-6
How to Use This Manual 1-7
Typographic Conventions 1-7
2 SAFETY....2-1
Overview 2-1
Safety Requirements 2-1
Connection to Power Source 2-3
Fuse Replacement 2-3
Cautions and Warnings 2-3
3 CONTROLS, CONNECTORS, INDICATORS AND MENUS 3-1
Overview 3-1
BITE 2 Transmitter 3-2
BITE 2P Transmitter 3-4
Receiver....3-6
Receiver Keys 3-7
Receiver Reset Switch....3-12
4 STANDARD TEST PROCEDURE....4-1
Overview 4-1
Step One: Prepare for Testing 4-3
Step Two: Powering-on the Receiver....4-4
Step Three: Scanning Test Information with the Wand (Optional) 4-6
If You Do Not Want to Scan Information Using the Wand....4-6
If You Want to Scan Information Using the Wand....4-6
Step Four: Setting Baseline, Warning and Fail Values....4-8
Step Five: Splitting the Strap (if needed)....4-9
If You Do Not Want to Split the Strap....4-9
If You Want to Split the Strap....4-9
Step Six: Connecting the Receiver and the BITE 2 or BITE 2P Transmitter to the Battery 4-11
Connecting the BITE 2 or BITE 2P Transmitter....4-13
Step Seven: Measuring the Cell and the Strap 4-14
Measuring the Next Section of a Sectioned Battery String....4-18
Step Eight: What to Do When the Test Is Complete....4-19
Reviewing a Test....4-19
Retesting Cells and Straps....4-20
Printing an Active Test to Review the Data (BITE 2P) 4-21

Powering Down and Disconnecting the BITE 2/2P....4-22
5 MODIFIED PROCEDURES FOR SPECIAL CONDITIONS....5-1
Overview....5-1
Reversing the Current Source Leads....5-1
Verifying the Source Current....5-2
Sectioning a Battery System....5-3
6 TRANSFERRING, PRINTING, AND DELETING TEST RESULTS....6-1
Overview....6-1
Exporting Test Results from the Receiver to a PC....6-2
Printing Test Results in the BITE 2P Transmitter Printer....6-4
Deleting Test Results from the Receiver....6-5
7 INTERPRETING TEST RESULTS....7-1
Overview....7-1
Instantaneous Interpretation....7-2
Short-Term Interpretation....7-3
Long-Term Interpretation....7-3
Temperature Corrections....7-4
8 SETTING OPTIONS....8-1
Overview....8-1
Turning the Receiver Backlight ON and OFF....8-2
Adjusting the Receiver Screen Contrast....8-2
Selecting the Receiver Language....8-3
Setting the Receiver Clock....8-3
Selecting the Line Frequency....8-5
9 MAINTENANCE AND TROUBLESHOOTING....9-1
Overview....9-1
Cleaning and Inspecting the BITE 2 and BITE 2P....9-2
Charging the Receiver....9-2
Replacing Batteries in the Receiver....9-3
Maintaining the Receiver Charger in the BITE 2 and BITE 2P....9-6
Maintaining Fuses in the BITE 2 and BITE 2P Transmitters....9-7
Verifying a Transmitter Fuse Problem....9-7
Replacing Fuses in the BITE 2 Transmitter....9-10
Replacing Fuses in the BITE 2P Transmitter....9-13
Interpreting Error Messages....9-16
If the BITE 2 or BITE 2P Needs Repairs....9-16
10 OPTIONAL EQUIPMENT....10-1
Available Options....10-1
APPENDIX A: TECHNICAL SPECIFICATIONS....A-1
Application....A-1
Electrical....A-1
BITE 2 and BITE 2P Transmitters....A-1
Receiver....A-2
Fuses....A-3
Mechanical....A-3
Environmental....A-4

Accessories - Standard A-5
APPENDIX B: REPLACEABLE PARTS B-1
Catalog Numbers 246002B and 246004 ..... B-1
Catalog Numbers 246002B and 246004 ..... B-2
How to Order Replaceable Parts for the BITE 2/2P B-2
GLOSSARY G-1
INDEX I-1

ADDENDUM: INSTRUCTIONS FOR USING AVOLINK

Figures

Figure 1-1: BITE 2 instrument 1-5
Figure 1-2: BITE 2P instrument 1-6
Figure 3-1: BITE 2 transmitter 3-2
Figure 3-2: BITE 2P transmitter 3-4
Figure 3-3: Receiver controls, connectors, and indicators 3-6
Figure 3-4: Flowchart for Receiver menus 3-8
Figure 3-5: Flowchart for Receiver menus (cont'd) 3-9
Figure 3-6: Flowchart for Receiver menus (cont'd) 3-10
Figure 3-7: Receiver menu 3-11
Figure 3-8: Receiver RESET switch 3-12
Figure 4-1: Receiver controls, connectors and indicators 4-4
Figure 4-2: Initialization screens 4-5
Figure 4-3: Scanning test information 4-7
Figure 4-4: Receiver controls, connectors, and indicators 4-11
Figure 4-5: BITE 2/2P transmitter connected to the battery 4-12
Figure 4-6: Receiver and potential probe positioned on top of battery cell terminals 4-15
Figure 4-7: Receiver and potential probe positioned on top of battery strap terminals 4-16
Figure 5-1: Reversing the current source leads on a single string of cells when a high or low current message is displayed. 5-2
Figure 5-2: Sectioning a battery system greater than 275 V 5-4
Figure 5-3: Sectioning a parallel string of cells 5-6
Figure 6-1: Exporting data to a PC 6-3
Figure 6-2: Printing test results 6-4
Figure 6-3: Deleting test results from the Receiver 6-6
Figure 7-1: Generic curve of impedance vs. cell life 7-4
Figure 9-1: RTC battery "piggybacks" the system battery 9-5
Figure 9-2: BITE 2 transmitter secondary fuses (front view) 9-11
Figure 9-3: BITE 2P transmitter secondary fuses (front view) 9-14

AVO
AVO INTERNATIONAL

AVO INTERNATIONAL

1

INTRODUCTION

About the BITE 2 and BITE 2P…

NOTE: *Before attempting to use the BITE 2/2P, be sure that you read and understand the safety requirements and operating procedures contained in this manual.*

Thank you for selecting an AVO International product. This instrument has been thoroughly tested and inspected to meet rigid specifications before being shipped.

It is ready for use when set up and operated as described in this manual.

The BITE 2 and BITE 2P are testing instruments used to evaluate the condition of stationary battery strings. They measure the complete electrical path of the battery:

- internal ac impedance of each cell/jar in the string
- dc terminal voltage of each cell/jar
- interconnection resistance

These measurements, along with other maintenance data such as ambient and pilot cell temperatures and ac ripple currents, help determine the condition of a battery system.

The BITE 2/2P consists of a **transmitter** and a **receiver** that enable an operator to test for sulfating plates, post-strap corrosion, poor internal connections and poor intercell connections.

How the BITE 2/2P Works

Average impedance values for different types of batteries are available from AVO International.

The operator connects the **current source leads** from the BITE 2/2P **transmitter** to a battery string so that an ac test current is capacitively coupled through the battery. It is best to test the battery string when it is operating at full float, that is, a constant charge level.

Then the operator uses the **receiver** to measure the voltage drop across the cell terminals. When the voltage drop across the cell is divided by the total ac current passing through the battery, the calculated value is impedance according to Ohm's Law. This impedance value gives the operator an indication of the overall condition of the cell, with high impedance typically indicating an unhealthy cell.

Several factors influence an impedance value, for instance, the size and type of cell, ambient and electrolyte temperature, and state of charge. Therefore, to determine the impedance of a healthy cell, the operator should measure a large number of similar cells under similar conditions and then calculate the average value. Deteriorating cells are easily identified by their higher-than-average impedance.

The BITE 2/2P also automatically measures and records the cell voltage and the time and date of the test. This voltage represents individual cell float voltage while measuring an operational string of cells.

The BITE 2/2P also measures intercell or strap connections and stores them with the cell impedance values. The BITE 2/2P can measure and record all aspects of the electrical path of the battery, including:

- location ID
- user ID
- test current
- total current

- internal cell impedance
- dc voltage
- intercell connector resistance
- specfic gravity
- time and date

Applications for the BITE 2/2P

The BITE 2/2P measures the following battery types, ranging from 1 to 7000 Ah:

- lead-acid flooded cells
- sealed (VRLA) cells
- nickel-cadmium cells

The BITE 2/2P tests many system types, including:

- telecommunications
- substations
- UPS systems
- electrical power substations
- railroad signals and communications
- motive power batteries
- aircraft power supplies
- marine and military applications
- many others

For information about other installations that might benefit from impedance testing, contact AVO International.

BITE 2/2P Measurements

Impedance readings are calibrated to 5 percent of reading over the specified temperature range. For ac impedance, the **receiver** screen presents data as ranges: 1.000, 10.00, and 100.0 mΩ. The maximum measurement is 200 mΩ.

Impedance precision (reproducibility) is 0.22%, and voltage precision is 0.05%.

Test numbers start with number one (001) and increment after each successful cell and strap reading. The operator initiates data acquisition by pulling a trigger on the **receiver**. The measurement range for dc voltage is from 1 to 25 V dc with an accuracy of 1 percent of reading.

Intercell (strap) and intertier connection measurements are made directly after the internal cell impedance measurement when STRAP is displayed on the LCD of the **receiver**. This feature provides resistance measurements in the same ranges as the cell/module impedance.

Total current is monitored with each impedance measurement to compute both cell and strap impedance and intercell (strap) resistance. The operator selects filtering in a menu in the **receiver** as either 50 Hz or 60 Hz depending on the line voltage.

A low current cutoff alarm is maintained at 3 A, and the maximum current allowed is 15 A. The LCD displays "Hi_A" to warn of an ac current over-range and "Lo_A" for current below 3 A.

Upon Receipt of the BITE 2/2P

Check the equipment received against the packing list to ensure that all materials are present. Notify AVO International of any shortage (tel: 610-676-8500).

The **BITE 2** instrument is shown in Figure 1-1. The BITE 2 includes the following components and accessories:

- **transmitter** with built-in **receiver** battery charger
- **receiver**

- **current source leads**
- clamp-on current sensor (CT) with a 6-ft extension cable
- canvas carrying case for leads
- instruction manual

Figure 1-1: BITE 2 instrument

The **BITE 2P** instrument is shown in Figure 1-2. The BITE 2P includes the following components and accessories:

- **transmitter** with built-in printer and **receiver** battery charger
- **receiver**
- **current source leads**
- clamp-on current sensor (CT) with a 6-ft extension cable
- instruction manual

Figure 1-2: BITE 2P instrument

Safety First

Be sure to read the safety information in Chapter 2 thoroughly and observe all safety precautions and recommendations.

How to Use This Manual

Typographic Conventions

- Figures and tables are numbered in sequence by section.
- Numbered lists show procedural steps.
- Bullets list items and options.
- Buttons represent elements on the BITE 2/2P control panel.

Cautions *alert you to possible damage to equipment.*

Never allow water to enter the case of the BITE 2/2P.

Warnings *alert you to conditions that are potentially hazardous to people.*

Always power off and disconnect the BITE 2/2P before cleaning it.

Notes *provide important information.*

NOTE*: If you do not want to test the strap, pull the trigger and go directly to Step Six.*

Margin notes *offer extra information and assistance.*

AVO
AVO INTERNATIONAL

AVO INTERNATIONAL

2

SAFETY

Overview

The BITE 2 and BITE 2P and their recommended operating procedures have been designed with careful attention to safety. However, it is not possible to eliminate all hazards from electrical test equipment or to foresee every possible hazard that may occur. The user not only must follow the safety precautions contained in this manual, but also must carefully consider all safety aspects of the operation before proceeding.

Any use of electricity inherently involves some degree of safety hazard. While AVO International has made every effort to reduce the hazard, the operator must assume responsibility for his or her own safety. Any work on batteries is hazardous and requires constant attention to safety. You should guard particularly against the possibility of acid spills, explosion, and electrical shock.

Safety Requirements

The BITE 2/2P test instrument has been designed to the IEC-1010-1 safety standard. Observe all industry standard safety rules for testing batteries.

- The BITE 2/2P **transmitter** is designed for connection to energized systems. Keep the BITE 2/2P **transmitter** S1 power switch set to **O** (OFF) or turn off the Current On/Off switch when connecting or disconnecting to the battery. Always wear rubber gloves during these operations.

- Always connect the source leads to the BITE 2/2P before connecting to the battery under test.
- Always remove the instrument test leads from the battery under test when not in use.
- The purpose of this equipment is limited to use as described in this manual. Do not use the equipment or its accessories for any purpose other than specifically described.
- To avoid electric shock hazard, operating personnel must not remove the protective instrument covers. Component replacement and internal adjustments must be made by qualified service personnel only.
- Do not operate in an explosive atmosphere. Explosive gases such as hydrogen can be present around batteries. A properly vented battery environment is considered safe, but it is the responsibility of the operator to verify conditions before using the BITE 2/2P.
- Wear protective clothing and eye protection to guard against skin and eye damage from battery acid or in the event of short-circuit sparking.

Replacement leads can be obtained from AVO International.

- Ensure that test leads and probes are in good condition, clean, and free of broken or cracked insulation.
- Observe all cautions and warnings in this manual and on the equipment.
- This instrument is to be used only by suitably trained personnel who are familiar with the hazards involved in testing high voltage dc systems.
- Safety is the responsibility of the operator.

Connection to Power Source

The BITE 2/2P test instruments operate from a single-phase power source. The three-wire power cord requires a two-pole, three-terminal, live, neutral, and ground type connector. The voltage to ground from either pole of the power source must not exceed the maximum rated operating voltage (250 V).

Before connecting to the ac power source, determine that the instrument rating matches the voltage of the power source and has a suitable two-pole, three-terminal grounding type connector.

The power input plug must be inserted only into a mating receptacle with a ground contact. Do not bypass the grounding connection. Any interruption of the grounding connection can create an electric shock hazard. Make sure that the receptacle is properly wired before inserting the plug.

Depending on whether the test set is supplied with a black, white and green input supply cord or a brown, blue and green/yellow supply cord, the black or brown cord lead must be connected to the live pole and the white or blue cord lead must be connected to the neutral pole of an approved power input plug. The green or green/yellow ground lead of the input supply cord must be connected to the protective ground (earth) contact of the input plug.

Fuse Replacement

See "Maintaining Fuses in the BITE 2 and BITE 2P Transmitters" on page 9-7 for detailed instructions on fuse replacement.

Refer fuse replacement to qualified personnel only. To avoid electric shock and fire hazard, use only the fuse specified (see Appendix B), which is identical with respect to type, voltage rating, and current rating.

Cautions and Warnings

This manual provides cautions and warnings where applicable, and these safety features should be strictly observed.

AVO
AVO INTERNATIONAL

AVO INTERNATIONAL

3

CONTROLS, CONNECTORS, INDICATORS AND MENUS

Overview

This chapter explains the locations and functions of the controls, connectors, indicators and menus for the BITE 2/BITE 2P **transmitter** and **receiver**. The first section covers the BITE 2 **transmitter**, the second covers the BITE 2P **transmitter**, and the third covers the **receiver**.

BITE 2 Transmitter

Figure 3-1 shows a front view of the **BITE 2 transmitter**.

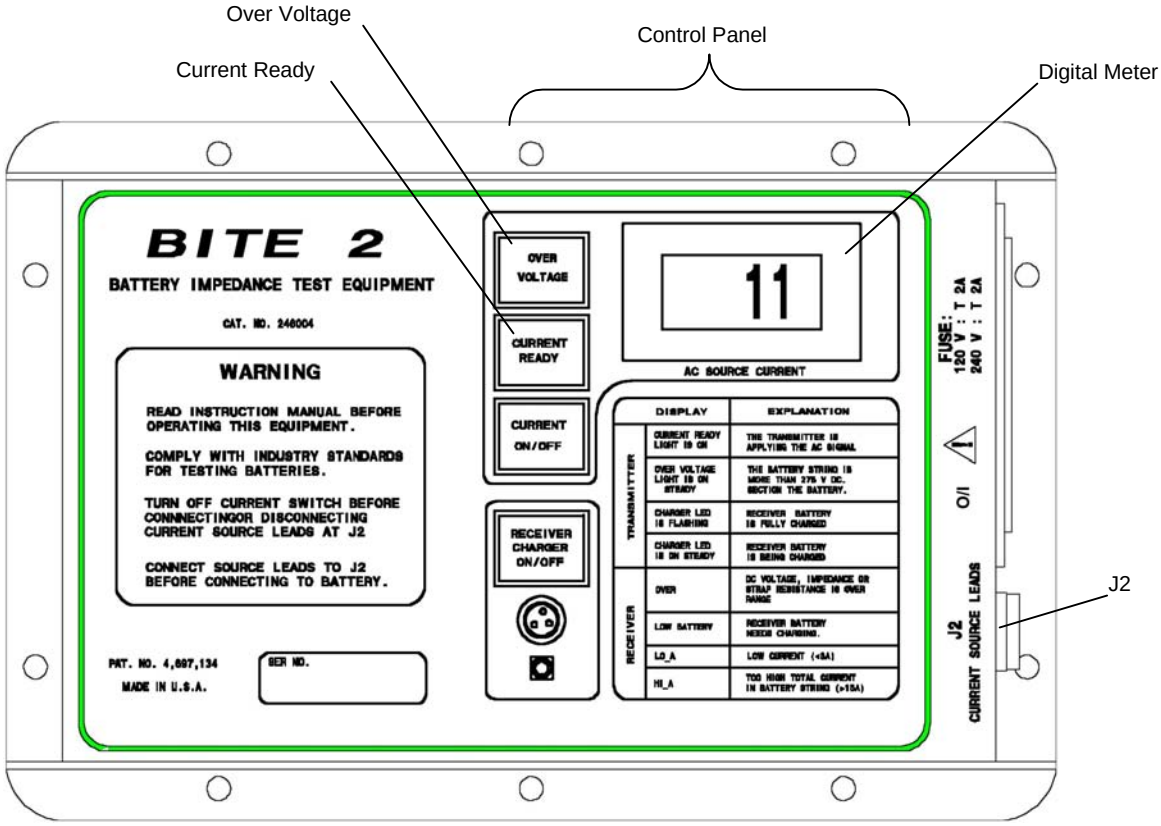

Figure 3-1: BITE 2 transmitter

Digital Meter—ac source current digital indicator with a scale of 0 to 15 A.

Power Switch—The power switch is pressed to turn the **transmitter** on and off. The power switch is marked with **|** (for ON) and **O** (for OFF).

Current On/Off Switch—The current on/off switch is pressed to start or stop the flow of the test current to the battery.

Receiver Charger On/Off Indicator—LED illuminates when the **receiver** is plugged into the **receiver** and the charger is energized. It also indicates the state-of-charge of the **receiver** battery. While the battery is charging, the LED remains constant; when the battery is fully charged, the LED blinks.

Indicator Lamps:

CURRENT READY—Illuminates after the coupling capacitors in the **transmitter** are charged to the bus voltage. A delay timer allows current flow to the battery under test.

POWER—Illuminates whenever the Power Switch is in the **|** (ON) position and the unit is powered by 120 V (230 V) ac line voltage

OVER VOLTAGE—Indicates that the voltage across the **current source leads** is greater than 275 V dc. (The READY light will go out and the current flow to the battery will stop when an over-voltage condition occurs.)

Transmitter Connector Panel

Power module—The **transmitter** power module comprises the following components:

J1 receptacle—The standard power cord supplied with the instrument is inserted into this 120 V/60 Hz (230 V/50 Hz) receptacle for ac power.

Fuse carrier/voltage selector—The fuse carrier is removed as needed to replace fuses. The arrow located on the connector panel directly to the left of the J1 receptacle should point to the indicator on the fuse carrier that corresponds to the proper voltage (120 V or 230 V).

J2 connector—The **transmitter current source leads** are connected from this connector to the battery under test.

J3 connector—The **receiver** battery is charged from this connector to J3 on the **receiver** to charge its battery.

BITE 2P Transmitter

Figure 3-2 shows a front view of the **BITE 2P transmitter**.

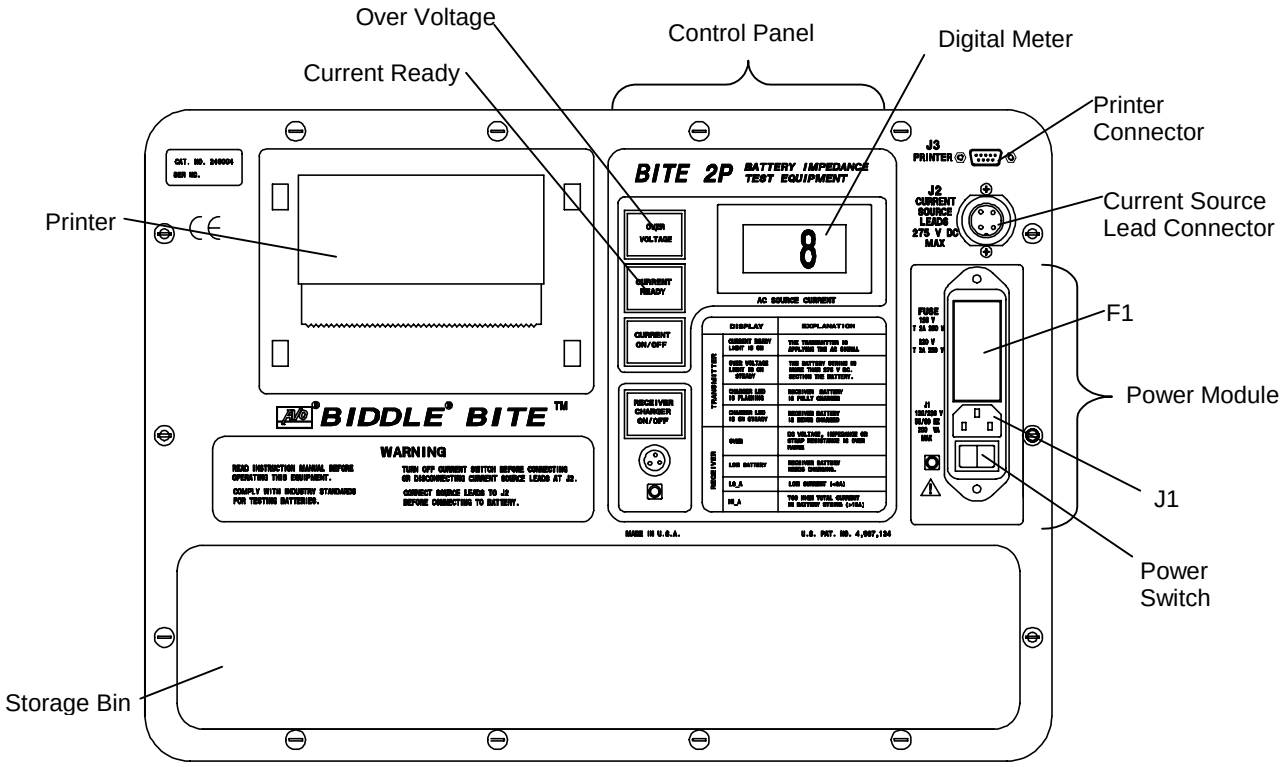

Figure 3-2: BITE 2P transmitter

Digital Meter—ac source current indicator with a scale of 0 to 15 A.

Power Switch—The power switch is pressed to turn the **transmitter** on and off. The power switch is marked with a **|** (for ON) and an **O** (for OFF).

Current On/Off Switch—The current on/off switch is pressed to start or stop the flow of the test current to the battery.

Indicator Lamps:

RECEIVER CHARGER ON/OFF—Illuminates when the **receiver** is plugged into J4 and the **receiver** charger is energized. It also indicates the state-of-charge of the **receiver** battery.

CURRENT READY—Illuminates after the coupling capacitors in the **transmitter** have been charged to the bus voltage. A delay timer allows current flow to the battery under test.

OVER VOLTAGE—Indicates that the voltage across the **current source leads** is greater than 275 V dc. (When an over-voltage condition occurs, the CURRENT READY light will go out and the current will stop being applied to the battery.)

J1 receptacle—The standard power cord supplied with the instrument is inserted into this 120 V (230 V) receptacle for ac power.

Fuse carrier/voltage selector—The fuse carrier is removed as needed to replace fuses. The arrow located on the connector panel directly to the left of the J1 receptacle should point to the indicator on the fuse carrier that corresponds to the proper voltage (120 V or 230 V).

J2 connector—The **transmitter current source leads** are connected from this connector to the battery under test.

J3 connector—The printer cable from the **receiver** is connected to print test data.

J4 connector—The **receiver** battery is charged from the on the **BITE 2P transmitter** when the J4 connector on the **transmitter** is connected to the J3 connector on the **receiver**.

Receiver

The **receiver** is a universal device that can be used with the entire BITE product family. Figure 3-3 shows a front view of the **receiver**.

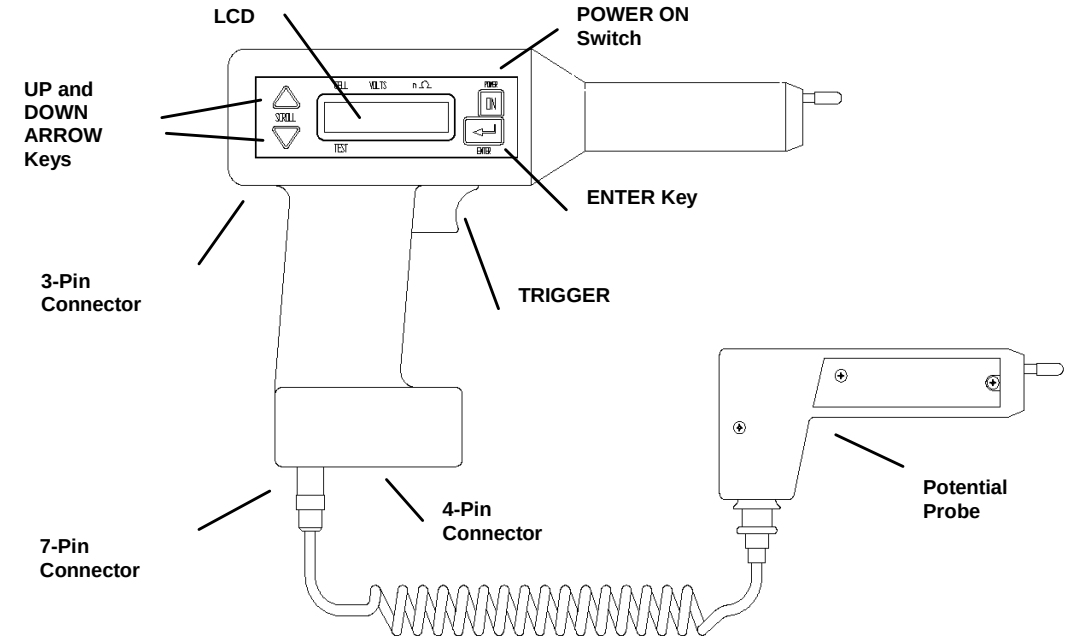

Figure 3-3: Receiver controls, connectors, and indicators

POWER ON switch—The POWER ON switch is pressed to power on the **receiver**. However, it is important to note that *this switch does not power off the **receiver***. You must choose POWER DOWN from Menu 1.

LCD—The graphics-type LCD displays menu choices and **receiver**-related information. (See the following subsection, "Receiver Keys," for information about keys associated with the screen.)

Potential probe—The potential probe is used in conjunction with the **receiver** to take cell impedance, voltage, and strap resistance measurements.

Trigger—The trigger is pulled to perform functions on the **receiver**, including entering test information.

7-pin connector—The 7-pin connector is used to insert one of the following: RS-232 communication cable, bar-code wand (optional), potential probe or printer.

4-pin connector—The 4-pin connector is used to connect the current sensor (**CT**).

3-pin connector—The 3-pin connector is used to connect the battery charger.

Buzzer—The buzzer prompts the user to input data. It also sounds under certain error conditions.

Receiver Keys

There are three keys located on the **receiver** that are used to operate the **receiver** and to navigate through the menus and displays on the LCD screen:

The UP ARROW and DOWN ARROW keys are used to select information displayed next to these keys on the screen. These keys are also used to scroll up and down through **receiver** screens.

The ENTER key is used to access **receiver** menus, which are shown in Figure 3-5 through Figure 3-6.

Test Menu Structure

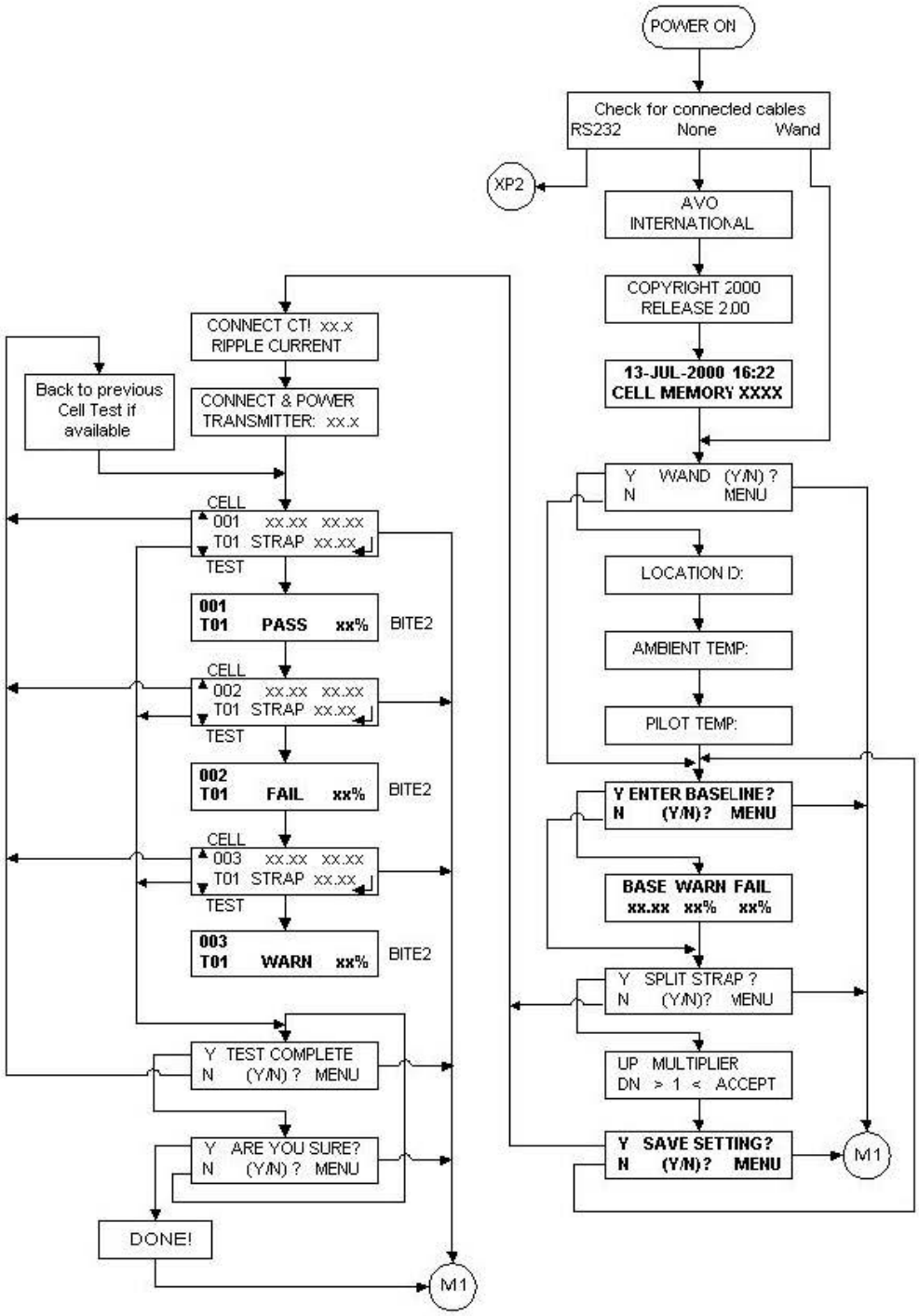

Figure 3-4: Flowchart for Receiver menus

Main Menu Structure

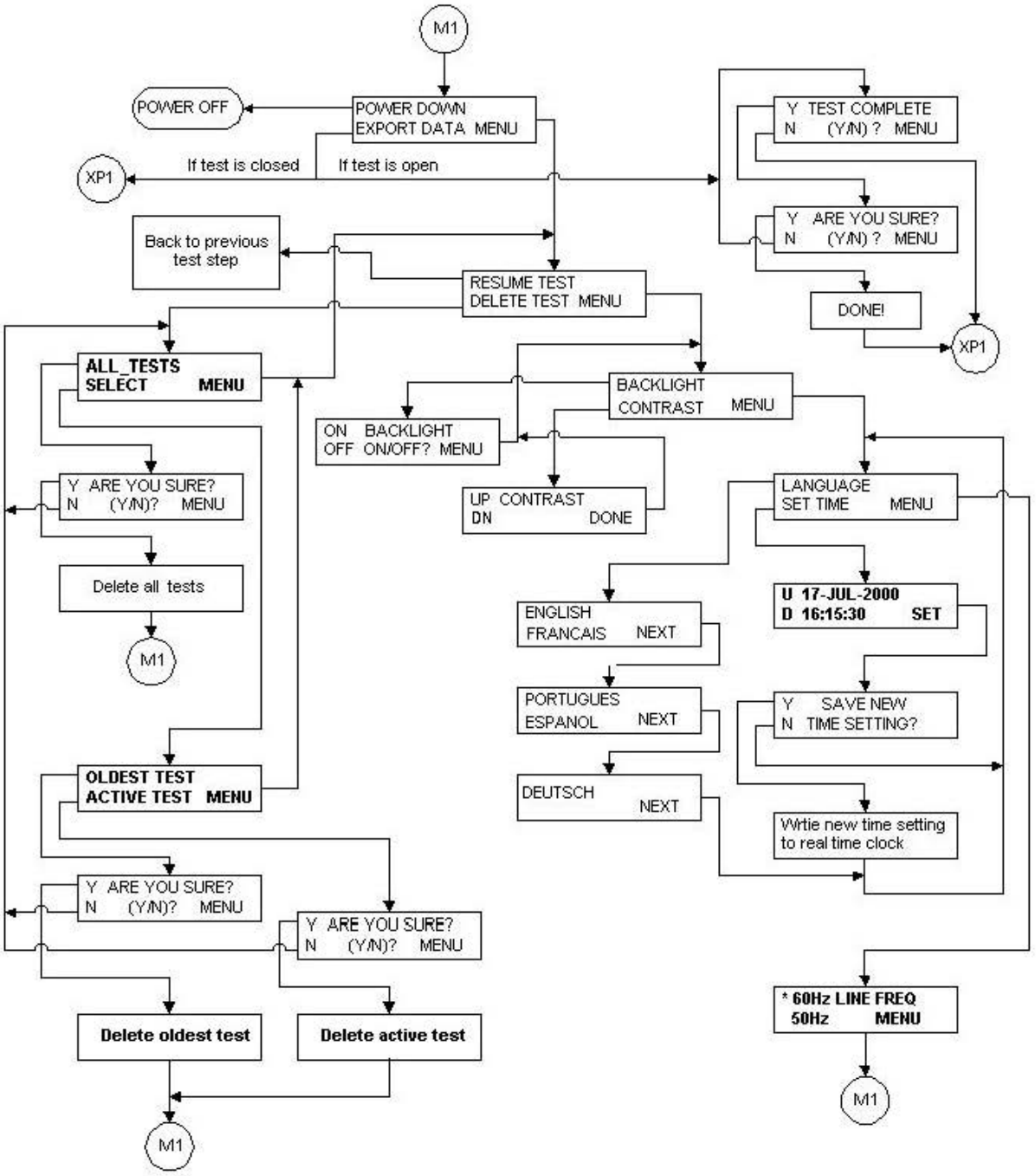

Figure 3-5: Flowchart for Receiver menus (cont'd)

Print Menu Structure

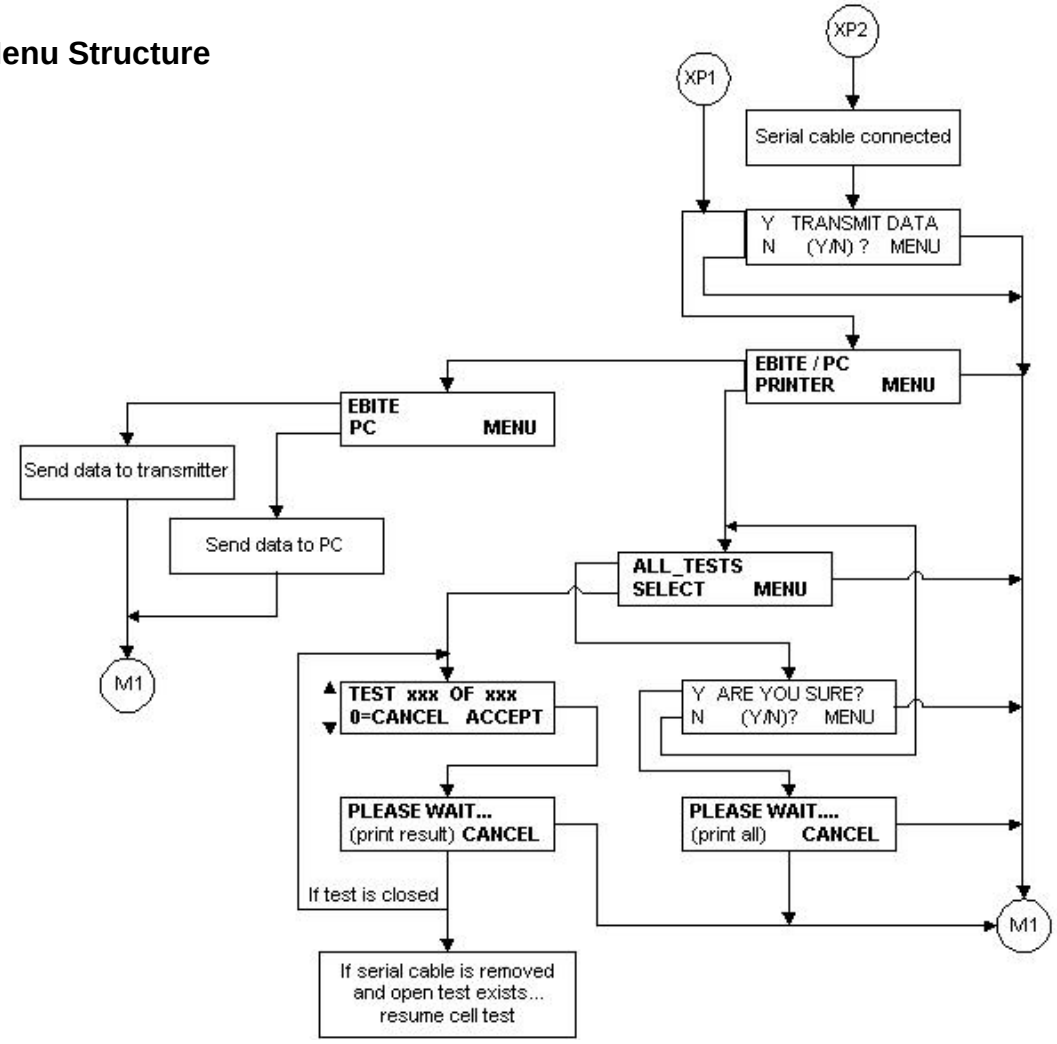

Figure 3-6: Flowchart for Receiver menus (cont'd)

Example of How to Use the Receiver Keys

1. Suppose that the following Menu is displayed on the screen as shown in Figure 3-5.
2. To select EXPORT DATA, press ▼.
3. However, to move from menu to menu, press ↵.

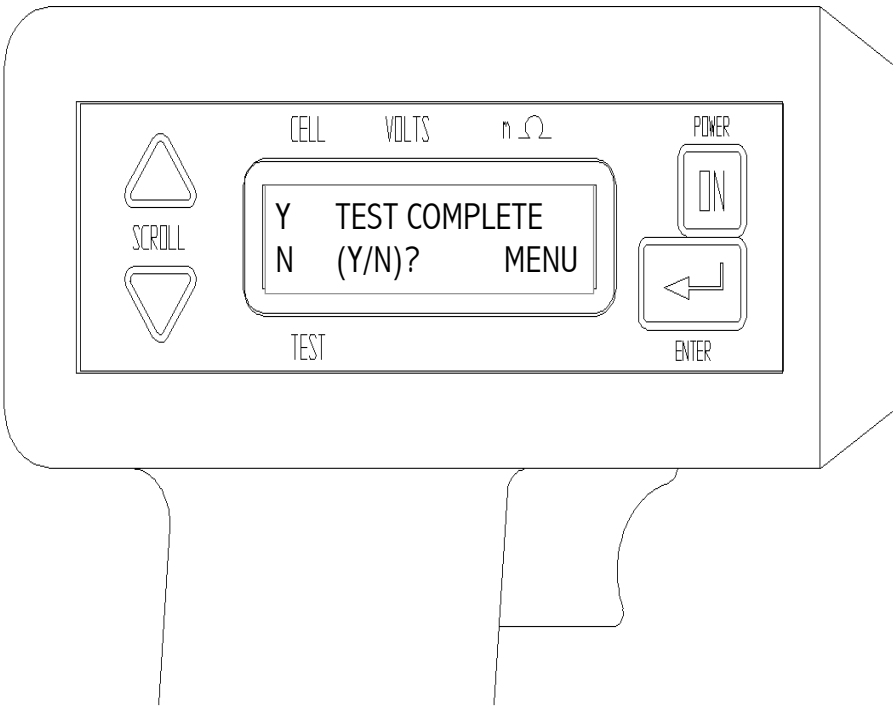

Figure 3-7: Receiver menu

Receiver Reset Switch

The RESET switch (see Figure 3-8), located on the **receiver** back panel, is only for AVO International authorized calibration and repair. Activating the RESET switch de-energizes the **receiver**. **Never use the RESET switch**. It will result in permanent loss of data and loss of calibration.

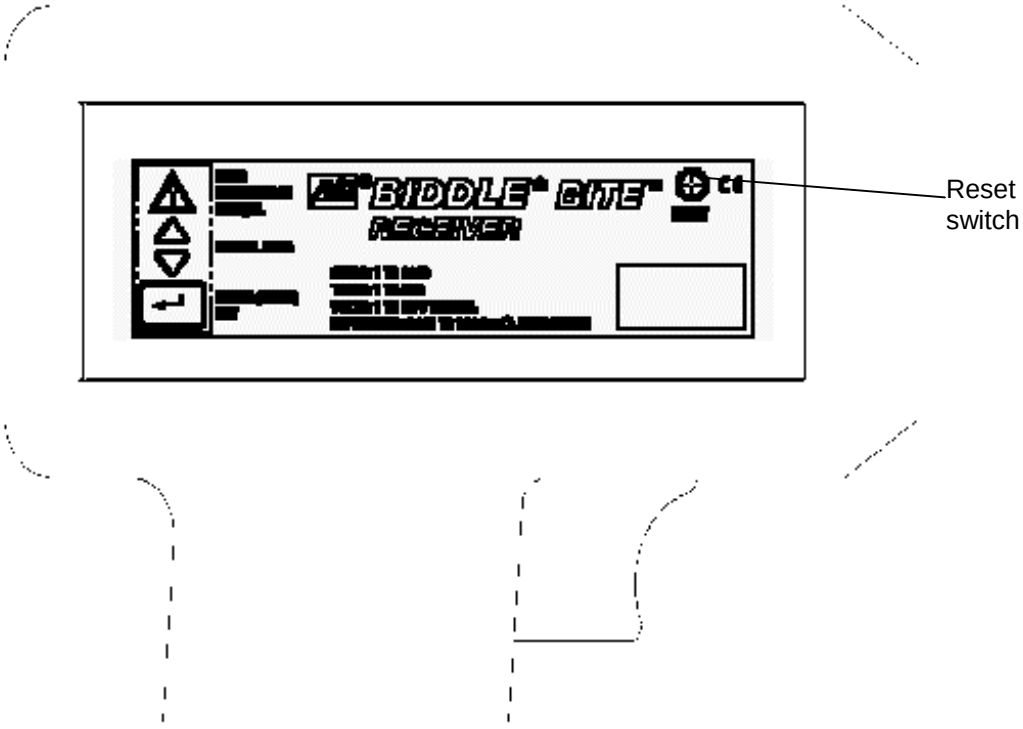

Figure 3-8: Receiver RESET switch

AVO INTERNATIONAL

4

STANDARD TEST PROCEDURE

Overview

The testing procedure explained in this chapter represents a generic application of the BITE 2/2P. Actual test scenarios may differ with each application. Contact AVO International if you need additional information about a specific test procedure.

> ***NOTE**: Before performing tests on any battery system, read, understand, and observe all safety precautions as outlined in Chapter 2 "Safety", which starts on page 2-1 of this manual.*

The BITE 2/2P is used to test battery strings while the dc system is at float potential. It can store up to 2040 cell/jar records in up to 300 tests. The **transmitter** can provide test current for battery strings of up to 275 V dc.

> ***NOTE:** If the battery under test is greater than 275 V dc, the string must be tested in sections. Refer to "Sectioning a Battery System" on page 5-3 for information on sectioning a battery.*

Using the BITE 2/2P to test a battery string involves the following steps:

1. Perform pretest activities such as recording information about the test site, visually inspecting the condition of the battery, and recording the temperature.

2. Power on the **receiver** and follow menus.

3. Scan test information with the bar-code wand (optional).

4. Split the strap (if needed).

5. Connect the **BITE current source leads** to the battery and then power on the **transmitter**.

6. Measure the cell impedance, voltage, and strap resistance.

7. Perform post-test activities such as transferring data, reviewing and deleting data, and powering down and disconnecting the **transmitter**.

The detailed procedures needed to perform these steps are explained in the following subsections.

Before attempting to use the BITE2 or 2P to perform a test, be sure that you first read and understand the safety requirements and operating procedures contained in this manual. When using the BITE 2/2P, strictly observe all safety precautions.

Operating Note

Do not perform a test while the battery is under a heavy charge or discharge. If the battery under test has been recently subjected to boost charging, a waiting period of 72 hours is recommended before performing an ac impedance test or any other test. If the ac mains are out and the battery is discharging to support the load, then unreliable impedance measurements may be obtained. Relative impedance values are affected by charge and discharge status, cell age, and ambient temperature.

Step One: Prepare for Testing

Record information about the test site, visually inspect the condition of the battery, and record the ambient temperature.

1. Record the installation date and the location and type of cells being tested. You can record the information at the battery test site on a data sheet or on the top of the paper fed from the built-in printer or scanned into memory.

If the battery is to be measured while on standby, ensure that the charger associated with the battery is supplying normal float current and that the battery is not in a discharged condition.

The best reproducible test information occurs when the battery is operating at recommended float voltage. See Operating Note on page 4-2.

2. Perform a visual check of all cells and connections.

For flooded cells, use a flashlight and mirror (if necessary) and check for plate corrosion and other internal defects. Record and correct all problems encountered before testing impedance.

For VRLA cells, visually inspect for leaking or weeping posts, bulging cells, terminal corrosion and general installation condition. Record and correct all problems encountered before testing impedance.

For NiCd cells, visually inspect each cell and intercell connector for general condition. Check electrolyte levels. Record and correct all problems encountered before testing impedance.

NOTE: For valve-regulated (sealed) cells, measure the temperature of the negative post of the cell.

Changes in cell temperature or ambient (room) temperature may affect cell impedance.

3. Record the cell temperature.

4. Record the ambient temperature.

After you have successfully performed these pretest activities, you are ready to power on the ***receiver***. The following subsection contains the appropriate procedures.

Step Two: Powering-on the Receiver

After you successfully perform the pretest activities described Step One, you are ready to power on the **receiver**.

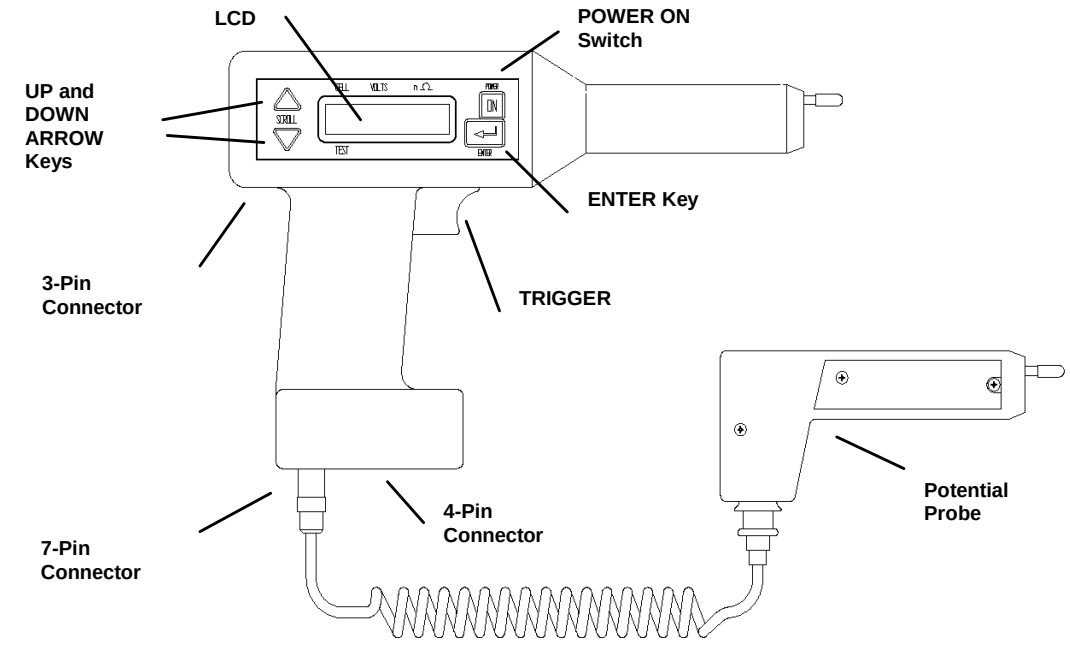

Figure 4-1: Receiver controls, connectors and indicators

1. Make sure the **receiver** charger is disconnected from the receiver.

> ***NOTE:*** *Do not use the **receiver** to perform tests while the charger is connected to the **receiver**.*

2. Connect the **potential probe cable assembly** to the 7-pin connector on the **receiver**.

3. Press the POWER ON switch on the **receiver**.

The **receiver** powers on and displays several initialization screens.

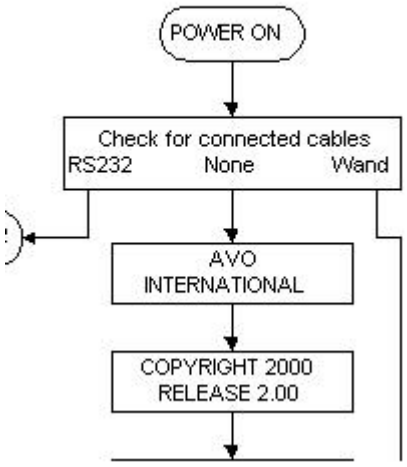

Figure 4-2: Initialization screens

> ***NOTE**: If the **receiver** is not sufficiently charged, a low battery message is displayed to alert you. You can work for a short time on a low battery; however, you should charge the **receiver** as soon as possible to ensure that your work is not disrupted because of low battery power.*

> ***NOTE**: If the available memory in the **receiver** is low (that is, if there is not much space left to store test information), a message is displayed to alert you. In this case, prior to testing you may want to export previous test results to a PC and then delete all or some of those test results from the **receiver**. Doing so will make more memory available for the test you are about to perform.*

After initializing, the **receiver** displays a screen that prompts you to decide whether you want to scan bar-coded information related to the test. The following subsection contains the appropriate procedures.

Step Three: Scanning Test Information with the Wand (Optional)

Refer to page 10-1 for additional information about bar coding.

After initialization, the screen on the **receiver** prompts you to decide whether you want to scan the test location ID, ambient temperature, and pilot cell temperature using preprinted bar codes provided by AVO International.

```
Y        WAND (Y/N)?
N                  MENU
```

*If you connect the wand before powering on the **receiver**, the **receiver** automatically prompts you to scan the location ID.*

If you choose to use the wand, the scanned information is stored in the **receiver** along with the results of the test. It is important to note that the wand is optional and, although it provides a quick and convenient way of recording information, it is not needed to perform a test.

If You Do Not Want to Scan Information Using the Wand

If you do not have a wand or you do not want to scan information about this test, press ▼ on the **receiver**. The ▼ key corresponds to the N (for NO) and instructs the **receiver** to bypass the scanning procedures.

The **receiver** then prompts you to decide whether you want to split the strap. Proceed to Step Five: Splitting the Strap on page 4-9.

If You Want to Scan Information Using the Wand

If you have a wand and you want to scan information about this test:

The UP ARROW key corresponds to the Y (for yes).

1. Press ▲ on the **receiver**.

The **receiver** prompts you to connect the wand.

```
CONNECT WAND!
```

2. Using the wand adapter cable, insert the wand into the 7-pin connector on the **receiver**. (See Figure 4-1 on page 4-4 for the location of the 7-pin connector.)

The **receiver** prompts you to begin scanning the test information. For information on creating bar-code labels, refer to the documentation provided with the wand.

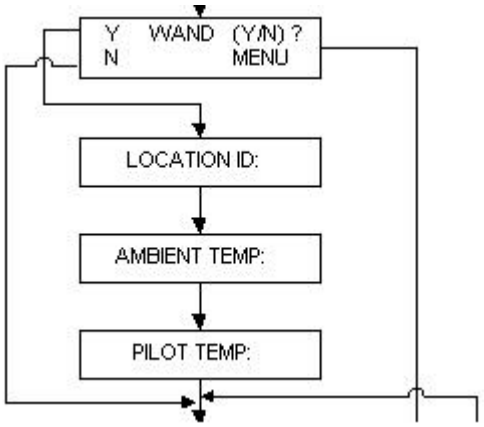

Figure 4-3: Scanning test information

If these indications do not occur, the receiver has not saved the information.

3. Scan the location ID. Then scan Enter. The **receiver** buzzer should sound and the wand LED should light each time you scan information with the wand.

4. Scan the ambient temperature. Then scan Enter.

5. Scan the pilot cell temperature. Then scan Enter.

You are finished scanning information. The **receiver** prompts you to disconnect the wand.

```
DISCONNECT WAND:
........WAITING........
```

6. Disconnect the wand from the 7-pin connector on the **receiver**.

The **receiver** now prompts you to set baseline, warn and fail values for the test.

Step Four: Setting Baseline, Warning and Fail Values

The BITE 2/2P now lets you set baseline, warning and fail impedance values when conducting a test. Then, after displaying the cell or strap measurements, the BITE 2/2P **receiver** screen will indicate PASS, FAIL or WARN and will display the measured value as a percentage of the baseline value.

After you finish wanding information, the **receiver** will display the following menu:

```
Y        ENTER BASELINE?
N        (Y/N)     MENU
```

If you do not want to set baseline, warn and fail values, press ▼ (for NO). The receiver screen will ask whether you want to split the strap. Go to "Step Five: Splitting the Strap below.

If you want to enter baseline, warn and fail values, press ▲ (for YES).

```
    BASE      WARN      FAIL
     XX.XX     XX%       XX%
```

1. Use the ▲▼ to scroll through the digits until the desired digit is displayed.
2. Press ↵.
3. Repeat for each digit and the decimal point until the desired baseline, warn and fail values are displayed.

Step Five: Splitting the Strap (if needed)

After the Wand Menu and Enter Baseline menu, the **receiver** displays a screen that asks whether you want to split the strap.

You need to split the strap if the strap you want to measure consists of more cables or intercell connectors than the diameter of the clamp-on current sensor (CT) can handle.

```
Y        SPLIT STRAP
N          (Y/N)?  MENU
```

> ***NOTE:*** *Splitting a strap may not split the current equally. Verify that the current is split fairly evenly between the straps. If the current split is not even, then try to find another location where the current is more evenly split.*

If You Do Not Want to Split the Strap

If you do not want to split the strap, simply press ▼ (for NO) on the **receiver**, which instructs the **receiver** not to split the strap.

You are prompted to connect the **CT** to the strap. Proceed to "Step Six: Connecting the Receiver and the BITE 2 or BITE 2P Transmitter to the Battery" on page 4-11.

If You Want to Split the Strap

If you want to split the strap:

1. Press ▲ on the **receiver** to enter Y (for YES).

   The **receiver** prompts you to enter a multiplier, which is a numeric value that the **receiver** uses to determine the measurement of the entire strap.

```
UP        MULTIPLIER
DN          >1_<    ACCEPT
```

For example, suppose that the strap you want to measure consists of four cables, but you can get the standard **CT** around only two of them. You would need to enter a multiplier of 2.

The **receiver** would then multiply the reading you take by two so that the proper test results are computed for all four cables.

Pressing ▲ increases the multiplier. Pressing ▼ decreases the multiplier.

2. Press ▲ or ▼ to specify the correct multiplier.

3. When the multiplier you want to use is displayed, press ↵ to accept the multiplier value.

Saving the settings saves the baseline, warn and fail values and the multiplier.

The receiver screen asks if you want to save settings

```
Y        SAVE SETTING?
N        (Y/N)      MENU
```

Press ▲ (for YES) or ▼ for (NO). Proceed to Step Six.

Step Six: Connecting the Receiver and the BITE 2 or BITE 2P Transmitter to the Battery

To avoid electric shock, always wear rubber gloves when making connection to battery systems. Voltages to ground in excess of 270 V dc are possible.

1. The receiver screen prompts you to connect the CT.

```
CONNECT CT!  XX.X
         RIPPLE CURRENT
```

2. Connect the plug of the CT to the 4-pin connector on the **receiver**. Figure 4-4 shows the location of the 4-pin connector.

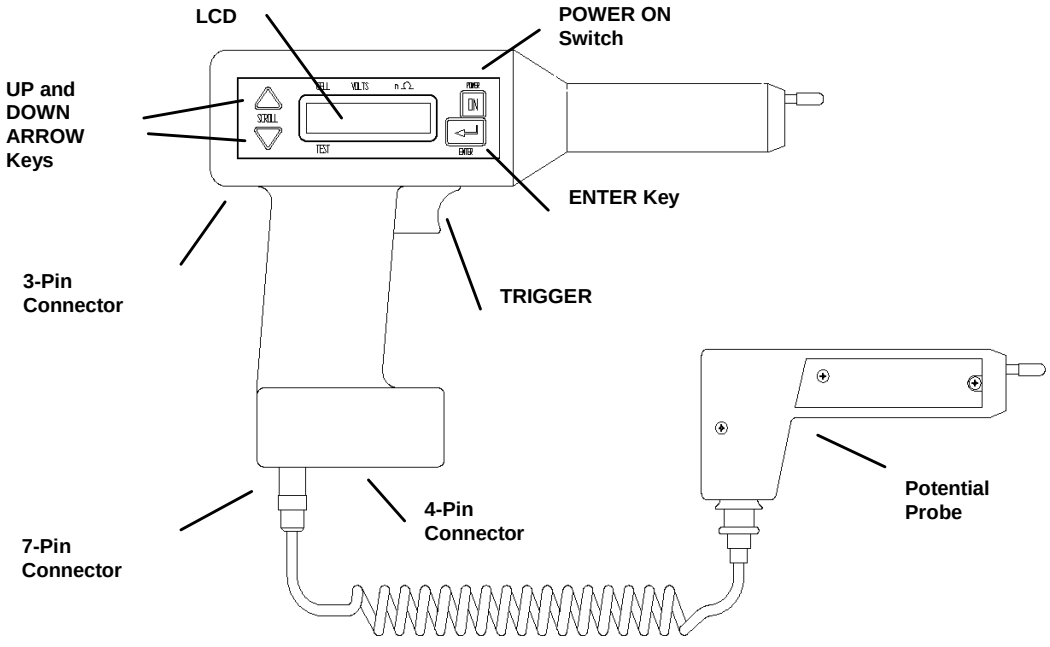

Figure 4-4: Receiver controls, connectors, and indicators

If you are splitting the strap, keep in mind the multiplier you specified. When the CT is connected, the receiver displays a measurement of the system ripple current.

3. Position the clamp-on end of the CT around a convenient intertier or intercell connection on the battery so that the current you are going to measure will be within the loop created by the **current source leads** from the **transmitter** and the battery string.

> **NOTE:** *Loads, parallel strings, and charging equipment can create parallel paths for the measurement current. Therefore, place the standard 2 in.* CT *at a location that verifies the source measurement current for the cells under test. Do not place the CT around the current source lead. This may not represent the current flowing through the battery string.*

4. Pull the **receiver trigger** to advance the receiver and store the ripple-current reading.

5. Next, the receiver screen prompts you to begin connecting the ***BITE 2/2P transmitter*** to the battery.

```
CONNECT & POWER
TRANSMITTER: XX.X
```

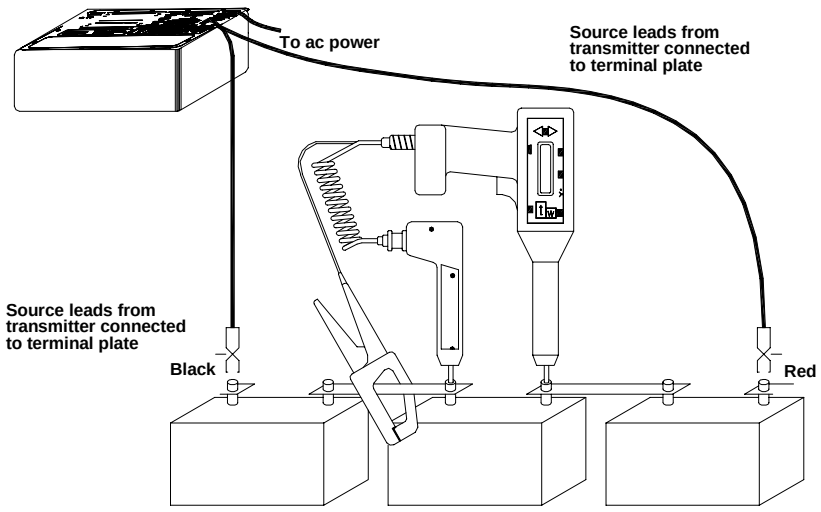

Figure 4-5: BITE 2/2P transmitter connected to the battery

Connecting the BITE 2 or BITE 2P Transmitter

1. Make sure that the transmitter power switch is in the **O** (OFF) position.

See Figure 3-1 for the position of the J2 connector.

2. Insert the plug of the **current source leads** into the **transmitter** connector marked J2. Then rotate the plug collar clockwise to tighten it.

Be sure to make the connections to the battery terminal plate and not to intercell connection hardware.

3. Connect the **current source leads** to the end positive and negative terminal *plates* of the battery.

CAUTION

You can use the BITE 2 **transmitter** to provide test current for measurements on each cell/module for a battery string of up to 275 V dc. If the battery under test exceeds this limit, section the battery into portions that are less than 275 V dc. For information on sectioning a battery, refer to "Sectioning a Battery System" on page 5-3.

4. Insert the power cord into the J1 power receptacle on the **transmitter**. Then plug the power cord into a 120 V (230 V) outlet, as appropriate.

.

5. Power on the **transmitter** by pressing the power switch to the **|** (ON) position.

*BITE 2:The **transmitter** CURRENT READY lamp illuminates when the unit is operating and applying current.*

*BITE 2P:The **transmitter** Power LED illuminates when the unit is on.*

6. Press the current On/Off switch to energize the current source. There is a delay while the coupling capacitors are charged to the bus voltage. Then the CURRENT READY lamp lights.

7. Observe the current reading displayed on the **receiver** screen.

8. Pull the **receiver trigger** to advance the **receiver** and store the source current reading.

The **receiver** displays the first test screen, which prompts you to measure the first cell. Proceed to "Step Seven: Measuring the Cell and the Strap."

Operating Note

If there are less than 3 A flowing within the string of cells selected, the receiver displays a message indicating low current (Lo_A). This ensures proper current magnitude for accurate measurement since the total current includes both current from the BITE 2/2P and any ac ripple current produced by the battery charger. If significant ripple current is present and out of phase with the applied source current, a low current condition may occur. If this happens, first turn off the BITE 2/2P **transmitter**, then reverse the polarity of the **current source leads** to bring the two currents in phase. For the majority of applications, this will not present any difficulty. (Refer to Chapter 5 for more information.)

Step Seven: Measuring the Cell and the Strap

Do not exceed 25 V dc, the maximum voltage allowed between the **receiver** and the potential probe.

After the **transmitter** is connected to the battery and is powered on, the **receiver** displays the first test screen.

CELL	VOLTS	mΩ
001	XX.XX	XX.XX
T01		

The digits displayed in the upper left corner of the screen (001) indicate that you are ready to test the first cell. The digits in the lower left corner indicate the number of the active test (for example, T01 for test one, T02 for test two, and so on).

To begin testing the first cell in the string:

The twisting action of the probe tips as the handle is pushed down cleans the point of contact and provides a better test connection. See Figure 4-6.

1. Position the **receiver** on the positive terminal and the **potential probe** on the negative terminal of the cell/jar, and then press down.

> ***NOTE:*** *The reason the **receiver** should be positioned on the positive terminal is to obtain a positive float voltage of the cell. Then a cell that has gone into "cell reversal" becomes very evident when it displays a negative float voltage.*

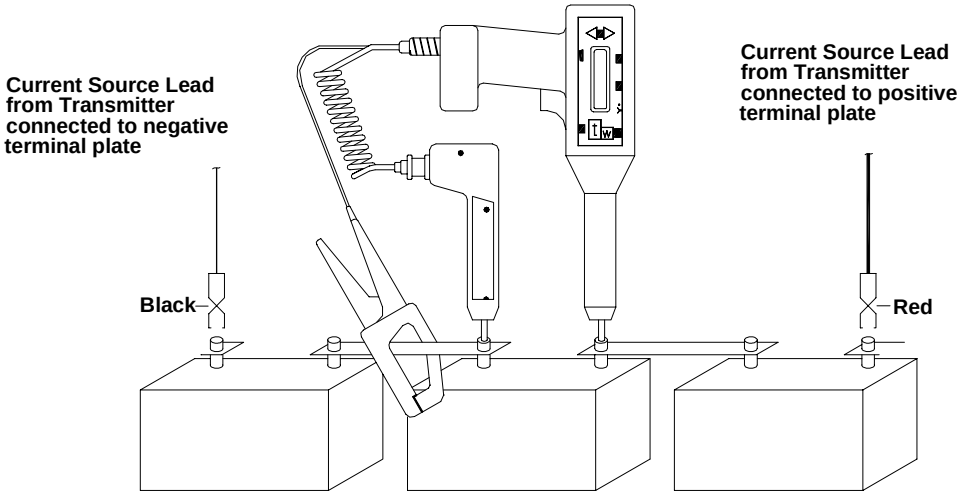

Figure 4-6: Receiver and potential probe positioned on top of battery cell terminals

2. View the cell terminal voltage and ac impedance values that are displayed on the **receiver** screen.

A sample screen is shown below.

CELL	VOLTS	mΩ
001	13.43	23.33
T01		

The measurements are stored in the receiver.

3. When the voltage and impedance values displayed on the screen stabilize, pull the trigger on the **receiver** to store the reading.

If you have entered baseline, warn and fail values, the screen will display either PASS, WARN or FAIL and a percentage of baseline.

001		
T01	PASS	XX%

If you do not want to test the strap, pull the trigger and go directly to Step Eight.

The **receiver** LCD now displays the word STRAP, which prompts you to test the strap that is associated with the cell you just tested.

CELL	VOLTS	mΩ
001	13.43	23.33
T01	STRAP	0.112

4. Position the **receiver** and potential probe on top of the battery strap terminals, and then press the probes down. See the sample placement shown in Figure 4-7.

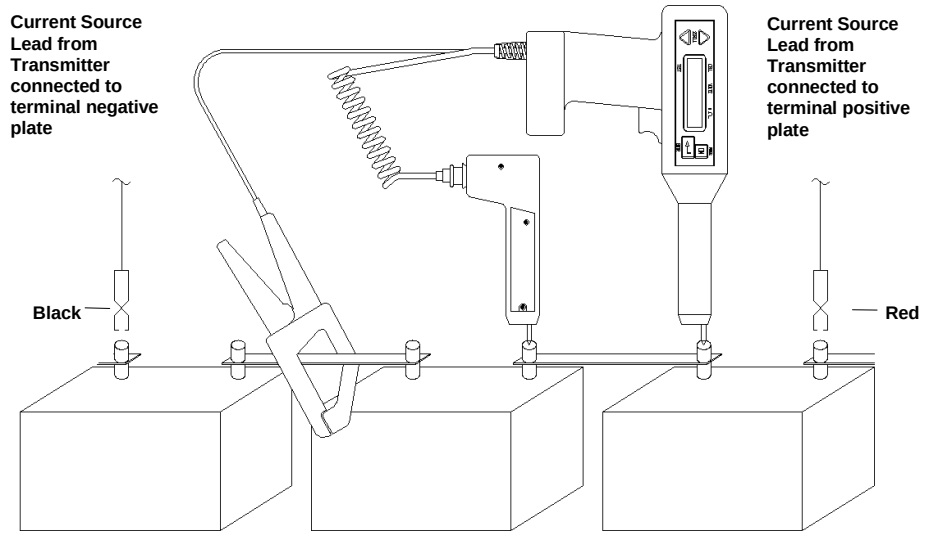

Figure 4-7: Receiver and potential probe positioned on top of battery strap terminals

5. When the strap value displayed on the screen stabilizes, pull the trigger on the **receiver** to store the reading.

The measurements are stored in the **receiver**.

The **receiver** now displays the digits 002 in the top left corner of the test screen. This means that you are ready to test cell #2.

If you are testing a sectioned battery string and want to test the next section, refer to the following subsection, "Measuring the Next Section of a Sectioned Battery String," for the appropriate procedures.

6. Continue to measure the other cells and straps in the string.

7. After the last cell, the **receiver** expects a strap result. Short the receiver and potential probe together and pull the trigger. This saves the last cell's data or else it will be lost.

8. When you are finished measuring all the cells and straps, press ▼ on the **receiver** to complete the test.

The **receiver** prompts you to confirm that the test is complete.

```
Y        TEST COMPLETE
N        (Y/N)?    MENU
```

*Review the test information that is stored in the **receiver**. You can scroll through the results and, if needed, retest individual cells and straps. Refer to "Reviewing a Test" on page 4-19.*

9. Press ▲ on the **receiver** to enter Y (for YES).

The **receiver** prompts you again to confirm that the test is complete.

```
Y        ARE YOU SURE
N        (Y/N)?          MENU
```

10. Press ▲ on the **receiver** to enter Y (for YES).

The **receiver** displays a screen to indicate that the test is complete.

```
          DONE!
```

For instructions on what to do following the test, see "Step Eight: What to Do When the Test Is Complete" on page 4-19.

Measuring the Next Section of a Sectioned Battery String

If you have finished testing the first section of a sectioned battery string and want to measure the next section:

1. Press the Current ON/OFF switch on the BITE 2/2P **transmitter**.

This blocks the current from being applied to the battery while the **transmitter** powers down.

2. Connect the **current source leads** to the next battery section.

> ***NOTE**: If you are interrupted and need to leave the site unexpectedly, simply shut down the **receiver** and **transmitter**. The **receiver** will "remember" where you left off when you return to finish the test.*

WARNING: Do not remove the BITE 2/2P transmitter current source leads from the battery until the BITE 2/2P transmitter is powered off. Always disconnect the current source leads from the battery before removing them from the J2 connector on the transmitter. Do not leave the BITE 2/2P connected to the battery when not in use.

3. Press the Current On/Off switch on the BITE 2/2P **transmitter**.

After the CURRENT READY light illuminates, the current is applied to the battery and you can continue testing.

Test the section. Repeat the procedure as needed, depending on the number of sections in the battery string.

Step Eight: What to Do When the Test Is Complete

You can perform the following operations after a test is complete:

1. Export test results to a PC. You can then use the PC to view or print the test results. (Refer to Chapter 6.)
2. Print test results on the BITE 2P **transmitter** printer.
3. Delete the test information from the **receiver**.
4. Start a new test. (Return to "Step One: Prepare for Testing" page 4-3.)
5. Power down and disconnect the **transmitter**. You will need to do this if you are finished using the BITE 2/2P for this testing session. (See "Powering Down and Disconnecting the BITE 2/2P" on page 4-22).

Reviewing a Test

At any time while you are performing a test, you can review the results of the active test that are already stored in the **receiver**.

1. To review the current test, press ▲ on the **receiver** to scroll back through the active test screens.
2. Press ▼ to scroll forward through the active test screens.

You may print the active test results on the BITE 2P **transmitter** printer for review. Please note that there are no statistics or bar graphs printed for the active test. See "Printing an Active Test to Review the Data (BITE 2P)" on page 4-21.

Retesting Cells and Straps

You cannot review a test after it has been completed. (Refer to "Step Seven: Measuring the Cell and the Strap," #'s 6,7, and 8, for a description of completing a test.)

If needed, you can retest any of the cells or straps in the current test.

1. Navigate through the test screens until information about the cell or strap you want to retest is displayed.

2. Pull the trigger.

   The **receiver** enters into test mode.

```
001          XX.XX      XX.XX
T01
```

3. Position the **receiver** and **potential probe** on top of the battery cell terminals, and then press down.

4. When the voltage and impedance values displayed on the LCD stabilize, pull the **trigger** to store the readings.

See the sample placement shown in Figure 4-7 on page 4-16.

5. When the strap values displayed on the screen stabilize, pull the **trigger** to store the reading.

> **NOTE**: *Both measurements must be taken.*

6. To return to testing, scroll forward to the next cell.

7. To retest another cell/strap, repeat steps 1-5.

Printing an Active Test to Review the Data (BITE 2P)

To print the test data of the string for which you are taking measurements, disconnect the **potential probe** and connect the printer cable to J3. The LCD will display the following screen.

```
        (EXPORT DATA)
Y     TRANSMIT DATA
N     (Y/N?)              MENU
```

1. Press ▲ for TRANSMIT. The screen will display the following screen.

```
EBITE/PC
PRINTER                   MENU
```

2. Press ▼ for PRINTER then SELECT. You will be prompted to enter the test number. During printing the following screen will appear:

```
ALLTESTS
SELECT
```

3. Press ▲ until the active test number is displayed. In this example, six is the active test.

```
TEST       001 OF 006
O = CANCEL              ACCEPT
```

4. Reconnect the **potential probe** to resume testing. The measurement screen is displayed again.

Powering Down and Disconnecting the BITE 2/2P

Before you power down and disconnect the **BITE 2/2P transmitter**, first power down and disconnect the **receiver**. Then power down and disconnect the **transmitter**. Carefully follow these steps:

1. To power down the **receiver**, press the key on the **receiver** until the LCD displays the following:

```
POWER DOWN
EXPORT DATA                MENU
```

2. Press ▲ on the **receiver** to choose POWER DOWN.

The **receiver** prompts you to confirm your decision.

```
Y          ARE YOU SURE?
N          (Y/N)?          MENU
```

3. Press ▲ on the **receiver** to enter Y (YES). The **receiver** powers down.

4. Disconnect the **CT** from the battery and the **receiver**.

You can now power down the ***transmitter***.

5. To power down the **BITE 2/2P *transmitter***, press the Current ON/OFF switch to disconnect the current source. Then press the **transmitter** power switch to the **O** (OFF) position.

Do not remove the BITE 2/2P transmitter **current source leads** from the battery until the BITE 2/2P transmitter is powered down. Always disconnect the current source leads from the battery before removing them from the J2 connector on the transmitter.

6. Remove the ***current source leads*** from the battery.

7. Remove the **current source leads** from the J2 connector on the **transmitter**.

Remember to recharge the receiver battery. Refer to "Charging the Receiver" on page 9-2 for detailed procedures.

8. Unplug the power cable and then disconnect it from the J1 receptacle on the ***transmitter***.

Do not leave the BITE 2/2P connected to the battery when not in use.

AVO
AVO INTERNATIONAL

AVO INTERNATIONAL

5

MODIFIED PROCEDURES FOR SPECIAL CONDITIONS

Overview

This chapter explains how to perform alternative test procedures, including reversing the **current source leads** and sectioning battery systems to correct high or low current situations.

This chapter also describes optional equipment that can be used with the BITE 2 and BITE 2P test instruments.

Reversing the Current Source Leads

If the **transmitter** displays a high or low current message, you need to modify the test procedure. See the following subsections for alternative test procedures.

Figure 5-1 shows a battery system with a single string of cells. If a high or low current message is displayed on the **receiver** after you connect the **current source leads** to a similar battery configuration, try reversing the polarity of the **current source leads**. Doing so shifts the test current by 180 degrees and offsets the effect of the system ripple current in the **receiver**. This helps ensure sufficient test current in the section of the battery string to enable computation of cell impedance or strap resistance.

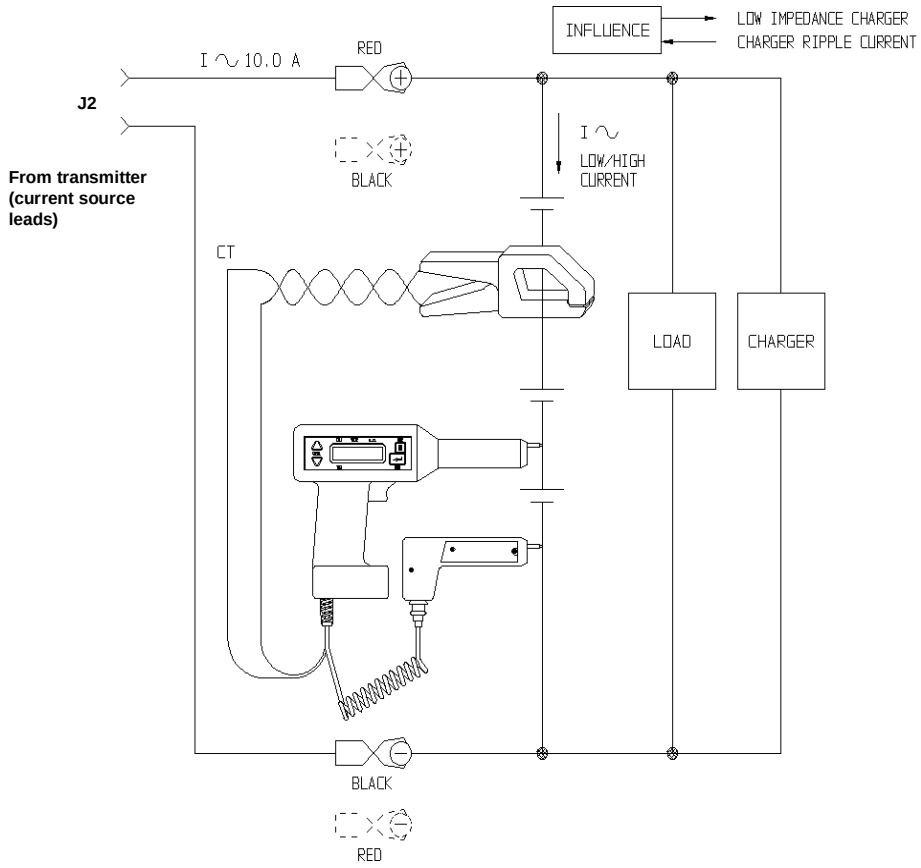

Figure 5-1: Reversing the current source leads on a single string of cells when a high or low current message is displayed.

Verifying the Source Current

A low current indication on the **transmitter's** analog or digital meter can be caused by high resistance in the cell string. To verify whether the magnitude of the source current is within the required limits (3-15 A):

This temporarily "disconnects" the transmitter and blocks the current from going to the battery.

1. Press the Current switch on the BITE 2/2P **transmitter** to the **O** (OFF) position.

2. Disconnect the **current source leads** from the battery.

3. Connect the **current source lead** clips together and restart current flow by pressing the BITE 2/2P **transmitter** Current On/Off switch to the | (ON) position.

Do not remove the BITE 2/2P transmitter **current source leads** from the battery until the transmitter is powered off. Always disconnect the **current source leads** from the battery before removing them from the J2 connector on the **transmitter**. Do not leave the BITE 2/2P connected to the battery when not in use.

If the LCD displays "Lo_A", refer to page 9-16 under "Maintenance and Troubleshooting."

*The wire for the **current source lead** set extends from only one side of each pair of jaws.*

Section the battery system by connecting the **current source leads** across individual sections of the string to isolate high-resistance or open cells and straps. (See "Sectioning a Battery System" below for the correct procedures.)

Sectioning a Battery System

To test certain battery systems with the BITE 2/2P, you must measure individual sections, one at a time. Examples are included in the following subsections.

Sectioning a Battery System Greater than 275 Volts

The nonpolarized coupling capacitor in the BITE 2/2P current source is limited to 275 V. This restricts the current source applied across battery systems of 275 V dc and higher.

If the battery system to be tested is greater than 275 V, you must test the system in sections that are 275 V or less. It is recommended that you section the battery in equally-sized sections.

Figure 5-2 shows a 600 V dc UPS system in which the source current leads are connected across a 200 V section of the battery string.

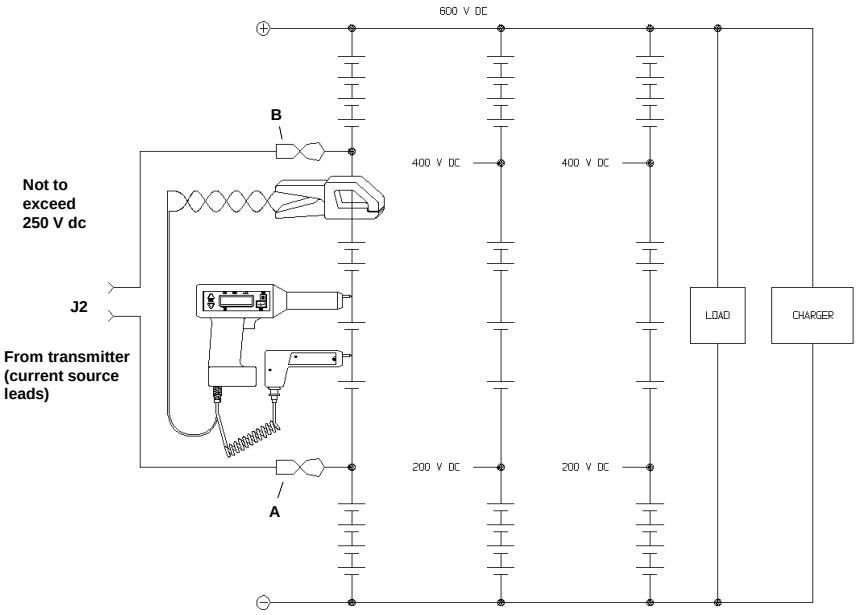

Figure 5-2: Sectioning a battery system greater than 275 V

The potential between the **current source leads** (red at A and black B) in Figure 5-1 cannot exceed 275 V. To section the string:

1. Place the **current source leads** (at points A and B) in the string so that the potential does not exceed 275 V.

2. Test the cells located between connections A and B.

3. When you are finished testing the cells, press the Current switch on the **transmitter** to the **O** (OFF) position.

> ***NOTE:*** *If you have to move the **transmitter** to test the next section, you may need to power down and disconnect the **transmitter**. (See "Powering Down and Disconnecting the BITE 2/2P" on page 4-21.)*

4. Remove the **current source leads** from the battery. Then move them to the next section to be tested (not to exceed 275 V).

Do not remove the BITE 2/2P transmitter **current source leads** from the battery until the BITE 2/2P transmitter current is de-energized. Always disconnect the current source leads from the battery before removing them from the J2 connector on the **transmitter**. Do not leave the BITE 2/2P connected to the battery when not in use.

5. Press the Current On/Off switch.

The current is applied to the battery and you can continue testing.

6. Test the section.

Repeat the procedure, as needed, depending on the number of sections in the battery string.

Sectioning a Battery System with Parallel Strings

Figure 5-3 shows how to start sectioning a battery system with parallel strings of cells. To test this string, you must section the system to supply the proper level of test current needed to stimulate the cell impedance or strap resistance measurements.

You may see other ripple current influences as noted in the single string of cells (see Figure 5-1) and you may have to interchange the polarity of the current source lead clips.

Do not remove the **current source leads** from the battery until the **transmitter** is turned off. Always remove the leads at the battery connection before removing them from the J2 connection on the **transmitter**.

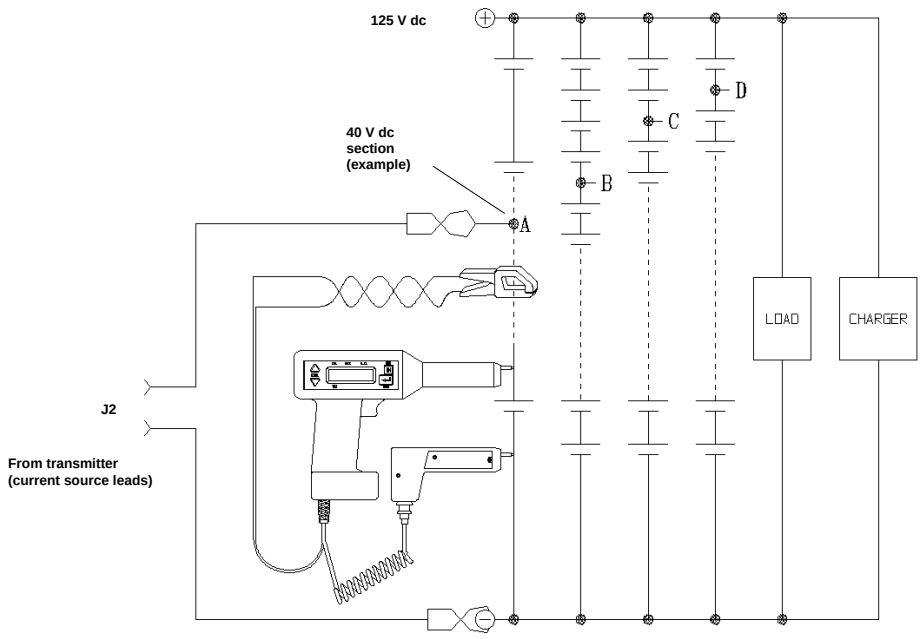

Figure 5-3: Sectioning a parallel string of cells

Sectioning High-Voltage UPS Batteries

Some UPS systems with voltages up to 600 V dc are designed with parallel strings of cells. To test one of these systems, positions the **current source leads** accordingly to satisfy both the test current and the voltage limit of the BITE 2/2P.

Refer to the procedure explained in the preceding subsection, "Sectioning a Battery System Greater than 275 Volts" In addition, consider the string impedance with reference to the remaining parallel string influences. Ensure that the majority of the current flows through the cells under test and not through parallel influences. (See Figure 5-2)

Sectioning Noisy UPS Systems

The BITE 2/2P source current may be affected by the noise generated by the switching power supply or the inverter. In this situation, test only a few cells at a time. See Figure 5-2 and refer to the procedure explained earlier in the subsection, “Sectioning a Battery System Greater than 275 Volts."

An alternative, although not normally recommended, is to not apply a test signal from the **transmitter**, but to use the noise in the system to induce the signal that is measured. Impedance will be calculated based on the current signal as an artifact of the noisy charger/rectifier. The **receiver** will not take measurements if the total current is less than 3 A or more than 15 A to maintain data reliability.

AVO
AVO INTERNATIONAL

AVO INTERNATIONAL

6

TRANSFERRING, PRINTING, AND DELETING TEST RESULTS

Overview

This chapter explains how to:

- Transfer test results from the **receiver** to a personal computer (PC)
- Print test results from the **receiver** to the BITE 2P **transmitter**
- Delete test results from the **receiver**

When a test is completed using the BITE 2/2P, the results are automatically stored in the **receiver**.

If needed the test results can be exported to a personal computer (PC) where it can then be viewed or printed.

If the PC has the appropriate software, the test information can be imported into standard spreadsheet programs for further analysis.

Test results can also be printed from the **receiver** to the BITE 2P **transmitter** printer.

Test results that are no longer needed may also be deleted from the **receiver**.

The following subsections contain the appropriate procedures.

Exporting Test Results from the Receiver to a PC

NOTE: The device receiving the data must be ready before transmitting the data.

The results of a test can be exported from the **receiver** directly to the PC.

1. Run the software on the PC that you are using to import the data.

If needed, refer to the instruction manual that came with the software. AVO International has shipped with the BITE 2/2P a software program called AVO®Link. Please refer to the Addendum to this manual for detailed instructions on AVO®Link.

2. Press the **receiver** Power On switch to energize the receiver.

*If you insert the RS-232 communication cable into the **receiver** before powering on the **receiver**, the Transmit Data Menu is automatically displayed in place of Menu 1.*

3. Press ↵ on the **receiver** to access Menu 1.

```
POWER DOWN
EXPORT DATA                MENU
```

```
Y   Transmit Data
N     (Y/N)   Menu
```

Press ▲ on the Receiver to select Y and skip steps 4 and 5 below.

```
Y  TRANSMIT DATA
N          (Y/N)          MENU
```

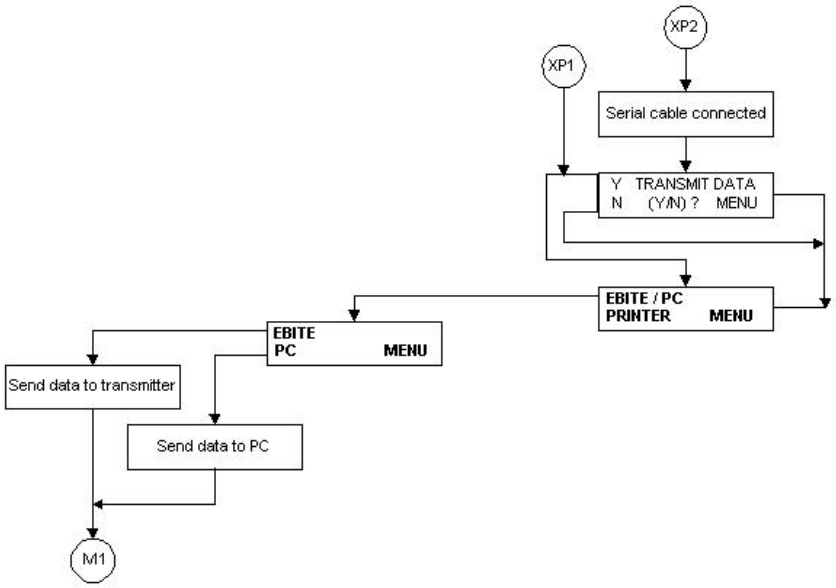

Figure 6-1: Exporting data to a PC

If the RS-232 communication cable is not connected, the receiver displays a message instructing you to connect it.

4. Connect the plug of the RS-232 communication cable/printer (Cat. No. 35340) to the 7-pin connector on the **receiver**. Then insert the pin end of the communication cable into the com port on the PC.

5. Press ▼ on the **receiver** to select EXPORT DATA.

The **receiver** prompts you to select EBITE/PC or printer.

```
EBITE/PC
PRINTER                    MENU
```

6. Press ▲ on the **receiver** to select PC.

A screen on the **receiver** tells you to wait as the test results are transferred.

When the transfer is complete, the **receiver** prompts you to choose POWER DOWN or EXPORT DATA.

```
POWER DOWN
EXPORT DATA                MENU
```

7. Disconnect the RS-232 communication cable from both the **receiver** and the PC.

8. Turn off the power to the **transmitter** and **receiver**. (See "Powering Down and Disconnecting the BITE 2/2P" on page 4-22.

Printing Test Results in the BITE 2P Transmitter Printer

To print test results on the built-in printer of the BITE 2P **transmitter**, connect the printer cable to the 7-pin connector on the **receiver** and to J3 on the BITE 2P **transmitter**. Follow the menus on the **receiver** to select the tests you wish to print.

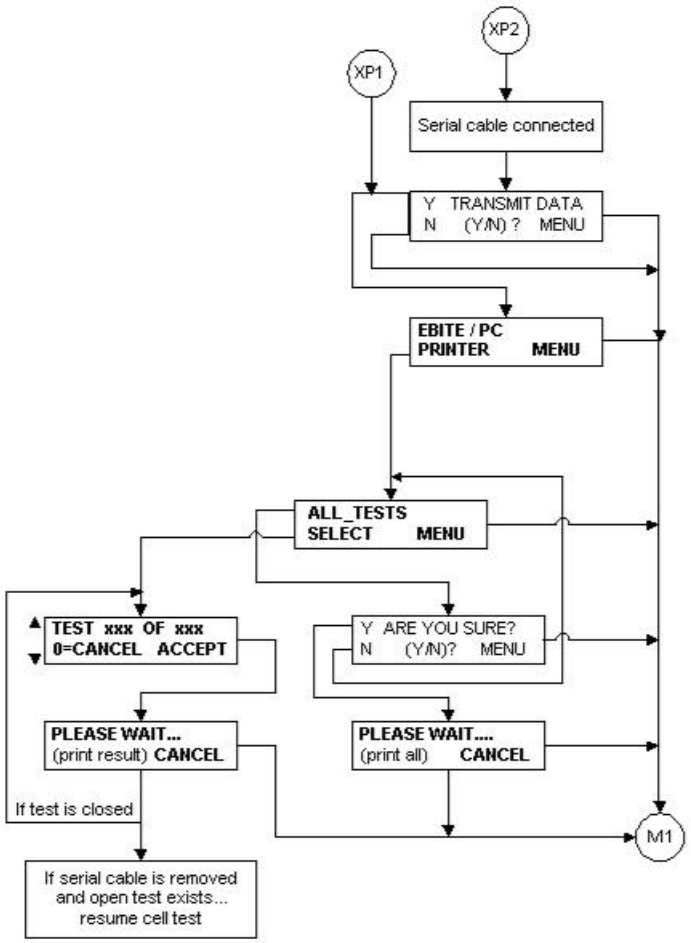

Figure 6-2: Printing test results

Deleting Test Results from the Receiver

When the results of a test are no longer needed, they can be deleted from the **receiver** by choosing DELETE DATA from receiver Menu 2.

1. Press ↵ on the **receiver** to access receiver Menu 2.

```
RESUME TEST
DELETE DATA                MENU
```

2. Press ▼ on the **receiver** to choose DELETE DATA.

You are prompted to select a test or all tests.

The **receiver** asks if you are sure you want to delete the data:

```
Y          ARE YOU SURE?
N             (Y/N)        MENU
```

3. Press ▲ on the **receiver** to enter Y (for YES).

The test results are deleted and you are returned to Menu 1.

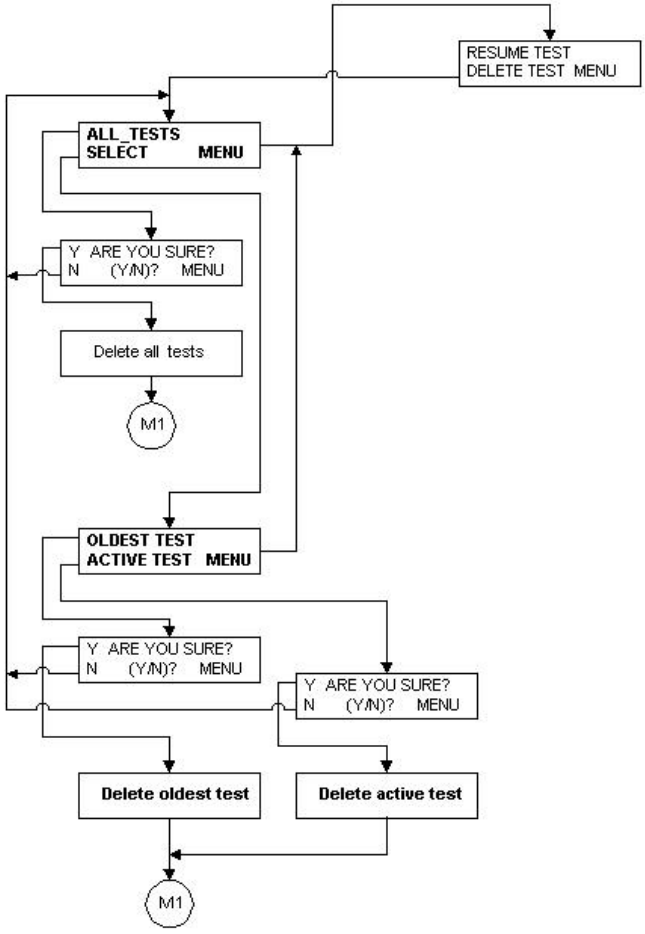

Figure 6-3: Deleting test results from the Receiver

AVO INTERNATIONAL

7

INTERPRETING TEST RESULTS

Overview

This chapter discusses various factors to consider when interpreting results of tests obtained with the BITE 2/BITE 2P.

This chapter also explains that AVO International maintains a database of cell impedance values for many battery types, manufacturers and applications. This information is available from AVO International upon request.

Impedance measurements with the BITE 2/2P should be made part of a battery maintenance program with readings taken and recorded semiannually for flooded lead-acid and nickel-cadmium cells and quarterly for VRLA.

Increases in impedance are caused by numerous factors. Some of the failure modes that can be detected by impedance are:

- plate sulphation
- dry-out
- soft shorts (dendritic shorts)
- hard shorts (due to sediment build-up or paste lumps)
- intercell and intertier connections (due to loose hardware or corrosion)
- internal corrosion

However, there are other factors that can change the impedance value of a cell. Impedance shifts can be caused by:

- temperature
- state of charge
- load conditions

These conditions should be monitored and recorded before making measurements. A large difference in the impedance of an individual or group of cells indicates a potential problem and warrants additional investigation.

Instantaneous Interpretation

The BITE 2/2P **receiver** has the ability to calculate impedance variations based on a preset baseline or benchmark value. On start-up (or after wanding) the following screen will appear:

```
Y        ENTER BASELINE?
N        (Y/N)     MENU
```

To enter a baseline or benchmark value, press ▲ to display the following screen:

```
   BASE      WARN      FAIL
    XX.XX     XX%       XX%
```

Enter the value by using ▲▼ to enter 0-9 or decimal point. Use ↵ to move to the next place.

To set the "Warning" level, enter a percent change using the same technique. The default warning value is 20% variation. The screen will display:

```
   BASE      WARN      FAIL
    20.25     25%       XX%
```

Continue to the "Fail" level and follow the same steps. The default fail value is 40% variation.

BASE	WARN	FAIL
20.25	25%	40%

After each cell/strap measurement, the **receiver** displays the percent variation and the cell status. Also, the **receiver** will remember the last values entered since they were saved when they were entered.

Short-Term Interpretation

Impedance readings for individual cells can be used in the short term to compare each cell with the average impedance reading for the entire battery. Cells with the deviations listed below require further investigation:

- Flooded lead-acid cells of more than 15% deviation from the string average
- Valve-regulated, lead-acid cell of more than 35% deviation from the string average
- Nickel-cadmium cells of more than 50% deviation from the string average and may be exhibiting "memory."

The deviations are shown in the bar graph accompanying the printout of a closed test.

Additional investigation of cells exhibiting the above deviations is recommended (cell temperature and specific gravity, if appropriate) and perhaps a load cycle test. AVO International recommends that you perform a complete analysis before replacing cells due solely to high or increasing impedance values.

Long-Term Interpretation

Impedance readings for the entire battery can be used in the long term to determine the need for replacement. Battery cell impedance values should be recorded and compared to previous readings to determine the position of the cell on the curve of impedance versus cell life. Generally speaking, cells with the following variations require immediate attention:

- Flooded lead-acid cells having variations (from baseline) greater than 20%
- Valve-regulated, lead-acid cell having variations greater than 50%
- Nickel-cadmium cells having variations greater than 100%.

This information is available from AVO International upon request. Call (610) 676-8500 or email to battery@avointl.com..

A sample curve for a generic valve-regulated, lead-acid cell is shown in Figure 7-1. Curves may differ for other manufacturers and battery chemistries, such as nickel-cadmium. AVO International maintains a database of cell impedance values for many battery types, manufacturers and applications. This information is available from AVO International upon request.

The initial decrease in impedance is due to the completion of the formation process, i.e., the conversion to active plate material.

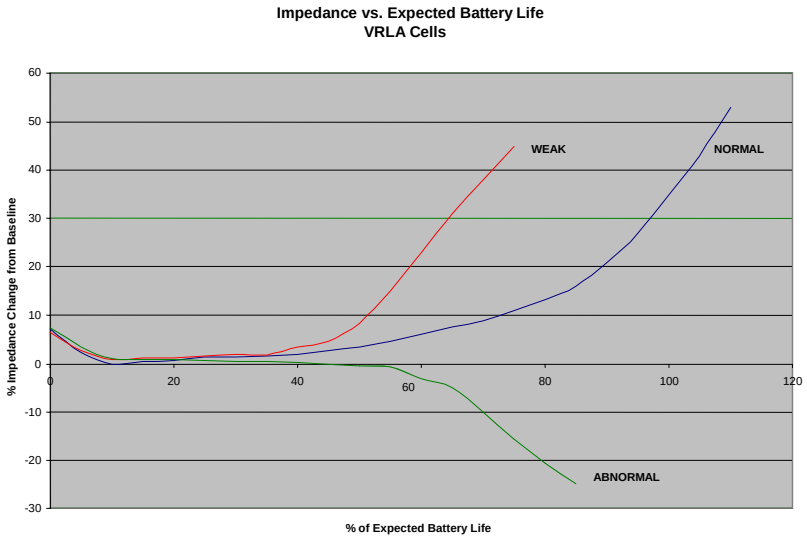

Figure 7-1: **Generic *curve of impedance vs. cell life***

Temperature Corrections

The internal impedance of a cell is inversely influenced by temperature. In addition, the degree of influence depends on battery type and length of exposure to the present ambient temperature.

Flooded battery types have a significantly more thermal mass and are slower to react to changing ambient temperatures than VRLA cells. The actual internal cell temperature can be measured by inserting a thermometer into the flooded cell via a fill tube or vent cap to determine the temperature present during impedance testing. Measure the temperature of VRLA cells at the negative terminal.

NOTE: *Please note the placements of HVAC systems as they can have a significant effect on the temperatures of the cells in the battery. For example, cell on the top tier of a three-tier rack may have higher temperatures than the cells on the bottom tier.*

NOTE: *Middle cells in three-cell or four-cell trays of Valve-regulated, lead-acid batteries may have a higher temperature due to the inability to remove heat as well as the* outside cells.

A suggested correction factor for impedance values of flooded lead-acid cells is shown below:

$$Z_b \text{ @ } 77 \text{ ° F} = \frac{0.088\ (Z_m)}{(T + 30)^{-0.520}}$$

Z_b = corrected battery impedance to 77 ° F

Z_m = measured impedance value

T = measured temperature value in °F

Contact AVO International at 610-676-8500.

Valve-regulated, lead-acid cells may differ among battery vendors and electrolyte types. Gel style cells have a different temperature response curve than the starved-electrolyte (AGM) types. If temperature correction is required, contact the battery manufacturer for these data.

AVO
AVO INTERNATIONAL

AVO INTERNATIONAL

8

SETTING OPTIONS

Overview

You can change these default options to optimize the BITE 2 and BITE 2P functions for your use.

This chapter explains how to set options that control the operation of the BITE2/2P **receiver**.

The BITE 2/2P **receiver** is shipped with certain options set, including:

- Turning the backlight on and off so that the **receiver** screen does or does not light up when the instrument is powered on
- Adjusting the screen contrast
- Selecting the language in which the **receiver** displays information (English, Français, Deutsch, Español, Português)
- Setting the date and time
- Setting the line frequency to 50 or 60Hz

Turning the Receiver Backlight ON and OFF

To turn the **receiver** backlight on and off so that the **receiver** screen does or does not light when the instrument is powered on:

1. Press ↵ to access the following **receiver** Menu.

```
BACKLIGHT
CONTRAST                    MENU
```

2. Press ▲ to select Backlighting.

You are prompted to turn the backlight on or off.

```
ON        BACKLIGHT
OFF        ON/OFF?          MENU
```

3. Press ▲ to turn the backlight on. Or press ▼ to turn the backlight off.

The **receiver** backlight is set as you specified.

Adjusting the Receiver Screen Contrast

To adjust the contrast of the **receiver** screen:

1. Press ↵ to access the **receiver** Menu 3.

```
BACKLIGHT
CONTRAST                    MENU
```

2. Press ▼ to select CONTRAST.

   You are prompted to turn the contrast up or down.

```
UP        CONTRAST
DN                          DONE
```

3. Press ▲ to turn the contrast up. Or press ▼ to turn the contrast down. Select DONE when the display is set as desired.

Selecting the Receiver Language

The **receiver** is programmed to display information in a number of languages. English is the default; however, you can easily select another language.

1. Press ↵ to access the **receiver** Menu 4.

2. Press ▲ to select LANGUAGE.

   The first two language choices are displayed.

Press ▲ or ▼ to select one of the languages displayed. Or press ↵ to view additional available languages.

Once you make a selection, the **receiver** displays screen information using the language you chose.

Setting the Receiver Clock

To set the date and time in the **receiver** clock:

1. Press ↵ to access the **receiver** Menu.

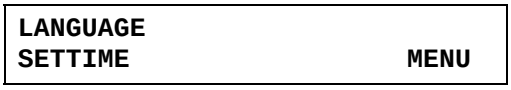

2. Press ▼ to select SET TIME.

The date and time as they are now set in the **receiver** are displayed.

The BITE receiver uses a global date format, DD-MMM-YYYY, e.g. 10-OCT-2000.

```
U        DD-MMM-YYYY
D        15:30:00  SET
```

3. If you want to change the month, press ▲▼ until the month is set correctly. Then press ↵.

Pressing ↵ moves the cursor from the month field to the day, year, hour, minutes, and seconds fields.

The BITE receiver uses military time (that is, a 24-hour clock). For example, 3:15 p.m. would be displayed as 15:15:00.

4. Set the day, year, hour, minutes, and seconds as needed.

5. When you are finished setting the clock, press ↵ as needed so that the minutes field is selected. Then press ↵ again.

The **receiver** prompts you to save the new time and date.

```
Y        SAVE NEW
N        TIME SETTING?
```

6. Press ▲ to enter Y (for YES).

The **receiver** clock is set.

Selecting the Line Frequency

The frequency setting in the **receiver** must be the same as the line frequency at the outlet. To set the line frequency :

1. Press until the following screen appears.
2. Use to select the correct frequency.
3. Press MENU to exit the line frequency set-up.

```
* 60 Hz      LINE FREQ
  50 Hz                  MENU
```

AVO
AVO INTERNATIONAL

AVO INTERNATIONAL

9

MAINTENANCE AND TROUBLESHOOTING

Overview

This chapter explains:

- How to maintain the BITE 2/2P so that it remains in good operating condition
- How to interpret error messages
- What to do if repairs are needed

***NOTE**: Before performing maintenance on the BITE 2 or BITE 2P, please read, understand, and observe all safety precautions as indicated in Chapter 2, "Safety". Maintenance should be performed only by qualified personnel familiar with the hazards involved with line-operated test equipment.*

The BITE 2/2P **transmitters** contain large high-voltage capacitors. During operation these capacitors could be charged up to about 300 V dc. Normally these capacitors are automatically discharged when the instrument is switched off. However, under certain fault conditions, these capacitors may be left charged. Always use a voltmeter to check the state of the charge and wear rubber gloves as necessary when touching the capacitors and the circuits connected to them.

Cleaning and Inspecting the BITE 2 and BITE 2P

Always power off and disconnect the BITE 2/2P **transmitter** before cleaning it.

Since the BITE 2/2P are used in corrosive environments, all components and test leads should be cleaned periodically (approximately every six months) with a mild detergent and a soft cloth.

Do not immerse the any components of the BITE 2/2P in water or allow moisture to enter the case.

Inspect measuring and **current source leads** for corrosion and wear.

Charging the Receiver

The BITE **receiver** is powered by a 4.8 V rechargeable Ni-Cd battery pack. The built-in Ni-Cd battery charger is designed to recharge the battery pack in approximately one hour.

To recharge the receiver battery pack:

Refer to "Powering Down and Disconnecting the BITE 2/2P" on page 4-22.

1. Turn off the **receiver**.

2. Insert the ac power cord into the **transmitter** ac receptacle at J1. Plug the power cord into an outlet.

*Refer to **Figure 3-1** and **Figure 3-2** for the location of the receiver charger on the BITE 2 and BITE 2P transmitters.*

3. Connect the charger 3-pin input connector to J4 on the **transmitter** at the charger panel.

Refer to Figure 4-4 on page 4-11 for the location of the 3-PIN connector.

4. Connect the charger 3-pin output connector to the **receiver** 3-pin mating connector.

5. Press the Charger On/Off switch.

The yellow LED on the panel turns on to indicate that charging is underway. The yellow light flashes when charging is complete.

If the yellow light does not turn on after approximately 10 seconds, there may be a serious electrical problem that should be addressed by qualified personnel.

*NOTE: The **receiver** cannot be operated while it is being charged.*

6. Unplug the ac power cord from the outlet and disconnect the charger from the **receiver**.

Replacing Batteries in the Receiver

There are two batteries in the **receiver**: a battery pack of four 1.2 V AA Ni-Cd batteries and an RTC battery.
AVO International recommends that you use the exact type of batteries for replacement since they match the corresponding charger characteristics.

***NOTE:** All data will be lost when the RTC battery is replaced. The **receiver** may have to be recalibrated, too.*

To replace the receiver battery pack of four 1.2 V AA Ni-Cd:

Refer to "Powering Down and Disconnecting the BITE 2/2P"on page 4-22.

1. Turn off the **receiver**.

2. Disconnect all cables from the **receiver**.

Be sure to power down the **receiver** and disconnect all cables before disassembling the receiver to replace the battery pack. Do not connect the charger to the **receiver** while replacing batteries.

3. Lay the **receiver** on a flat surface with the display screen face down. Using a Phillips head screwdriver, remove the eight screws fastening the back cover and probe housing.

4. Carefully remove the probe housing. Remove the back cover.

Do not disturb the wrist strap, trigger assembly, or wiring harness.

5. Locate the battery pack at the base of the **receiver**. Unplug the battery pack from the 5-PIN connector of the **receiver** printed circuit board

Dispose of the Ni-Cd battery pack in an environmentally safe way.

6. Install the replacement battery pack (part number 30654).

   Be sure to align the replacement battery pack connector with the keyed mating connector on the printed circuit board.

7. Reassemble the **receiver** by placing the back cover over the printed circuit board.Ensure that the two connector-mounting plates are aligned with the channels inside the back cover.

8. Snap the back cover into place, and then fasten it using the six Phillips head screws.

9. Snap the probe housing into place, and then fasten it using the two Phillips head screws.

Make sure that no wires are pinched when replacing covers and housings!!!!!

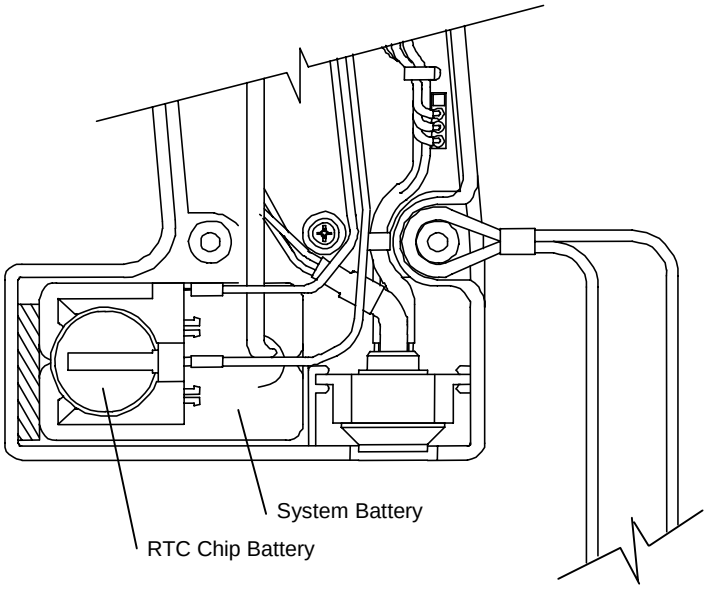

Figure 9-1: RTC battery "piggybacks" the system battery

.

To replace the receiver RTC (Real-Time Clock) battery:

Refer to "Powering Down and Disconnecting the BITE 2/2P"on page 4-22.

1. Turn off the **receiver**.

2. Disconnect all cables from the **receiver**.

Be sure to power down the **receiver** and disconnect all cables before disassembling the **receiver** to replace batteries. Do not connect the charger to the **receiver** while replacing batteries.

3. Lay the **receiver** on a flat surface with the display screen face down. Using a Phillips head screwdriver, remove the eight screws fastening the back cover and probe housing.

4. Carefully remove the probe housing. Remove the back cover.

CAUTION

Do not disturb the wrist strap, trigger assembly, or wiring harness.

RTC battery is P/N 35569.

5. Locate the battery at the base of the **receiver**. Remove the battery from the holder.

Dispose of the lithium battery in an environmentally safe way.

6. Install the replacement battery (part number 35569).

Be sure to align the replacement battery polarity with the mating battery holder.

7. Reassemble the **receiver** by placing the back cover over the printed circuit board.

Ensure that the two connector-mounting plates are aligned with the channels inside the back cover.

8. Snap the back cover into place, and then fasten it using the six Phillips head screws.

9. Snap the probe housing into place, and then fasten it using the two Phillips head screws.

Make sure that no wires are pinched when replacing covers and housings!!!!!

Maintaining the Receiver Charger in the BITE 2 and BITE 2P

NOTE: *The charger in the BITE 2P **transmitter** does not have a user-replaceable fuse. Please call AVO International at 610-676-8500 (or email to battery@avointl.com) if there are problems with this charger.*

Maintaining Fuses in the BITE 2 and BITE 2P Transmitters

Both the BITE 2 and BITE 2P **transmitters** contain two primary fuses and two secondary fuses.

The J1 ac receptacle on the **transmitter** contains the following primary fuse configuration:

Refer to Figure 3-1 on page 3-2 for the location of the BITE 2 transmitter primary fuse.

Catalog No. 246002B

Double Pole 2 AT, 250 V, 5 mm x 20 mm

Catalog No. 246004

Double Pole 2 AT, 250 V, 5 mm x 20 mm.

The output of the **transmitter** is double pole fused with two 15 ATM, 600 V type fuses. These secondary fuses are installed to protect the operator from possible shock and to protect the BITE 2/2P circuitry in the event of catastrophic component failure. The secondary fuses are mounted on the bottom base panel internal to the BITE 2 **transmitter** as in Figure 9-2. See Figure 9-3 for the BITE 2P configuration. The fuses are coordinated for fast response to a dc inrush from the battery under test.

Under no circumstances should any fuse be defeated or replaced with another type of fuse. Replace with the fuse types specified in Appendix B: Replaceable Parts List.

Verifying a Transmitter Fuse Problem

If you encounter a problem with the BITE 2 or BITE 2P **transmitter**, check the primary and secondary fuses to see if the problem is fuse related.

Identifying a Primary Fuse Problem

To identify a primary fuse problem in the transmitter:

1. Remove the **transmitter** from the vicinity of the battery room.

2. Verify that the **transmitter** ac line voltage selector is set for the correct ac line voltage (120 V or 230 V).

   The arrow located on the connector panel directly to the left of the J1 receptacle should point to the arrow on the fuse carrier that corresponds to the proper voltage.

3. Insert the ac power cord into the J1 ac receptacle. Then plug the power cord into the (120 V or 230 V) outlet.

4. Press the power switch to | (ON), and then the Current On/Off switch.

5. The **transmitter** POWER light and Current On/Off switch should illuminate followed by the CURRENT READY indicator. If neither indication occurs, the primary fuse may be bad. Refer to the appropriate subsection, "Replacing Fuses in the BITE 2 Transmitter" on page 9-10 or "Replacing Fuses in the BITE 2P Transmitter" on page 9-13.

Identifying a Secondary Fuse Problem

To identify a secondary fuse problem in the transmitter:

1. Remove the **transmitter** from the vicinity of the battery room.

2. Verify that the **transmitter** ac line voltage selector is set for the correct ac line voltage (120 V or 230 V).

   The arrow located on the connector panel directly to the left of the J1 receptacle should point to the arrow on the fuse carrier that corresponds to the proper voltage.

3. Insert the ac power cord into the J1 ac receptacle. Then plug the power cord into the 120 V (230V) outlet.

4. Connect the **current source leads** to the J2 connector on the **transmitter** connector panel. Then short (or clamp) together the red and black clamps of the **current source leads**.

5. Press the power switch to the | (ON) position to power on the **transmitter**. Press the Current On/Off switch to energize the current circuit.

   The **transmitter** POWER light and the CURRENT READY light should illuminate. Also, the digital meter should indicate current.

6. Observe the AC source current reading on analog or digital meter. Current reading should be about 10 amps for 60 Hz or about 8 amps for 50 Hz.

If the displayed reading is 0, the transmitter secondary fuses may be bad. Refer to "Replacing Fuses in the BITE 2 Transmitter" on page 9-10, or "Replacing Fuses in the BITE 2P Transmitter" on page 9-13, as appropriate.

Replacing Fuses in the BITE 2 Transmitter

If you identify a fuse problem and suitably trained repair personnel are available to perform the operation, refer to the following subsections to replace primary and secondary fuses.

Replacing the BITE 2 Transmitter Primary Fuse

To replace the BITE 2 transmitter primary fuse:

1. Remove the **transmitter** from the vicinity of the battery room.
2. Press the **transmitter** power switch to the **O** (OFF) position. Then disconnect the ac power cord from the ac outlet.
3. Remove the **current source leads** from the battery under test.

Do not remove the BITE 2 transmitter current source leads from the battery until the BITE 2 transmitter is powered down. Always disconnect the current source leads from the battery before removing them from the J2 connector on the transmitter.

4. Remove the **current source leads** from the J2 connector on the **transmitter**.
5. Remove the fuse carrier from the power module on the **transmitter**.

If the fuse is not bad, refer to "Identifying a Secondary Fuse Problem" on page 9-9.

6. Remove the damaged fuse and replace with exact replacement spares (not provided) as specified in *Appendix B: Replaceable Parts List*. Verify with an ohmmeter that the removed fuse is indeed bad.

7. Replace the fuse carrier in the power module on the **transmitter**.

> **NOTE:** *An arrow is located on the transmitter directly to the left of the J1 receptacle into which you insert the fuse carrier. Make sure that this arrow points to the arrow on the fuse carrier that corresponds to the correct voltage (120 V or 230 V).*

8. Test the **transmitter** as described under Verifying a Transmitter Fuse Problem" on page 9-7.

If the instrument still does not respond correctly, return it to AVO International for service. Please refer to the repair section later in this chapter.

Replacing the BITE 2 Transmitter Secondary Fuses

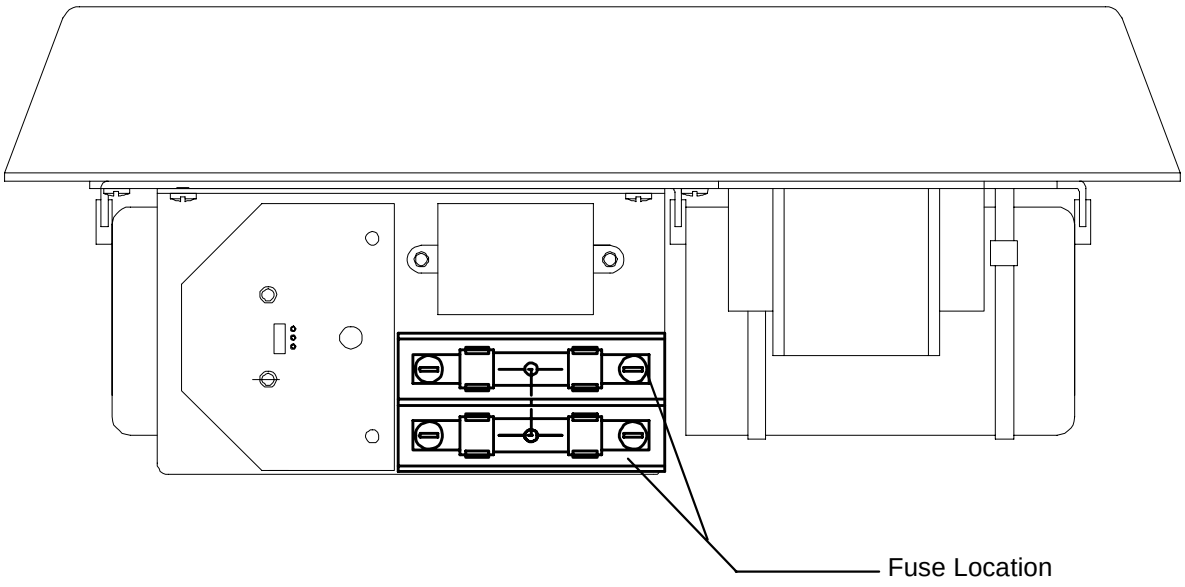

Figure 9-2: BITE 2 transmitter secondary fuses (front view)

To replace the transmitter secondary fuses:

1. Remove the **transmitter** from the vicinity of the battery room.

2. Press the **transmitter** power switch to the **O** (OFF position to power down the **transmitter**. Then remove all cables from the J1 and J2 connectors.

Do not remove the BITE 2 transmitter current source leads from the battery until the **transmitter** is powered down. Always disconnect the current source leads from the battery before removing them from connector J2 on the **transmitter**

3. Remove the top panel screws.

4. Carefully lift the transmitter chassis out of the case.

5. Locate the two-pole fuse block on the front plate of the transmitter chassis (see Figure 9-2 shown earlier in this chapter). The fuses should be marked 15 ATM or 15 KLM.

6. Remove the fuses from the fuse block. Verify if one or both fuses are bad.

7. If needed, replace the bad fuse(s) with the exact replacement type as specified in *Appendix B: Replaceable Parts List*.

8. Reassemble the **transmitter** by returning the chassis to the case, inserting the top panel screws into the recessed holes and tightening to 0.7 Newton-Meters. Do not over-tighten because this will misalign required clearances for mechanical operation. Then test the **transmitter** as described earlier in "Verifying a Transmitter Fuse Problem" on page 9-7.

9. Replace the top panel screws.

   If the instrument still does not respond correctly, return it to AVO International for service. Please refer to "If the BITE 2 or BITE 2P Needs Repairs" on page 9-16.

Under no circumstances should any fuse be defeated or replaced with another type of fuse. Replace with the fuse types specified in *Appendix B: Replaceable Parts List*.

Replacing Fuses in the BITE 2P Transmitter

If you identify a fuse problem and suitably trained repair personnel are available to perform the operation, refer to the following subsections to replace primary and secondary fuses.

Replacing the BITE 2P Transmitter Primary Fuse

To replace the transmitter primary fuse:

1. Remove the **transmitter** from the vicinity of the battery room.
2. Press the **transmitter** power switch to the **O** (OFF) position. Then disconnect the ac power cord from the 120 V (230 V) ac outlet.
3. Remove the **current source leads** from the battery under test.
4. Remove the **current source leads** from the J2 connector on the **transmitter**.
5. Remove the fuse carrier from the power module on the **transmitter**.

If the fuse is not bad, refer to "Identifying a Secondary Fuse Problem" on page 9-9.

6. Remove the damaged fuse and replace with exact replacement spares (provided) as specified in *Appendix B: Replaceable Parts List*. Verify with an ohmmeter that the removed fuse is indeed bad.

7. Replace the fuse carrier in the power module on the **transmitter**.

> ***NOTE:*** *An arrow is located on the* ***transmitter*** *directly to the left of the J1 receptacle into which you insert the fuse carrier. Make sure that this arrow points to the arrow on the fuse carrier that corresponds to the correct voltage (120 V or 230 V).*

8. Test the **transmitter** as described earlier in the subsection, "Verifying a Transmitter Fuse Problem."

If the instrument still does not respond correctly, return it to AVO International for service. Please refer to "If the BITE 2 or BITE 2P Needs Repairs" on page 9-16 for the necessary information.

Replacing BITE 2P Transmitter Secondary Fuses

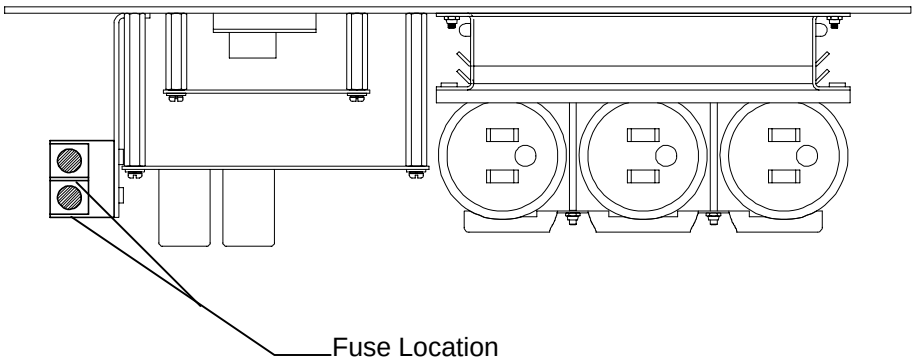

Figure 9-3: BITE 2P transmitter secondary fuses (front view)

To replace the transmitter secondary fuses:

1. Remove the **transmitter** from the vicinity of the battery room.

2. Press the **transmitter** power switch to the **O** (OFF) position to power down the transmitter. Then remove all cables from J1 and J2 connectors.

Do not remove the BITE 2P transmitter current source leads from the battery until the **transmitter** is powered down. Always disconnect the current source leads from the battery before removing them from connector J2 on the **transmitter**.

3. Remove the screws around the top panel of the transmitter.

4. Carefully lift the transmitter chassis out of the case.

5. Locate the two-pole fuse block on the front plate of the transmitter chassis (see Figure 9-2 shown earlier in this chapter. The fuses should be marked 15 ATM or 15 KLM.

6. Remove the fuses from the fuse block. Verify if one or both fuses are bad.

7. If needed, replace the bad fuse(s) with the exact replacement type as specified in Appendix B: Replaceable Parts List.

8. Reassemble the **transmitter** by returning the chassis to the case; replace the screws around the top panel and tightening to 0.7 Newton-Meters. Do not over-tighten because this will misalign required clearances for mechanical operation. Then test the **transmitter** as described earlier under "Verifying a Transmitter Fuse Problem" on page 9-7.

   If the instrument still does not respond correctly, return it to AVO International for service. Please refer to page 9-16 for the necessary information.

Interpreting Error Messages

Condition	Display	Explanation
Low Current	Lo_A	Receiver screen display for **transmitter** current measurement (I < 3.0 A)
High Current	Hi_A	Receiver screen display for ripple and **transmitter** current measurement (I > 15.0 A)
Over-range	OVER	Receiver screen display for dc terminal voltage, impedance, and strap resistance
Low Battery	LOW BATTERY	Receiver screen display indicating low battery pack capacity
Over Voltage	OVER VOLTAGE lamp	The OVER VOLTAGE light illuminates when the voltage across which the current source leads are connected is greater than 275 Vdc. Section the battery as described under Sectioning a Battery System on page 5-3.

If the BITE 2 or BITE 2P Needs Repairs

AVO International offers complete repair service and recommends that its customers take advantage of this service in the event of equipment malfunction. Please call 610-676-8500 and ask for Customer Service to obtain an RA #, then ship to:

TEL: 610-675-8500

AVO International
ATTN: Repair Department
Valley Forge Corporate Center
2621 Van Buren Avenue
Norristown, PA 19403 U.S.A.

It is best if you return the entire instrument, including leads, to help us find the source of the problem. Many times the problem appears to be the **transmitter**, but the problem is eventually found to be in the **receiver**. Please indicate all pertinent information, including problem symptoms and attempted repairs. Equipment returned for repair must be shipped prepaid and insured and marked for the attention of the Repair Department.

AVO INTERNATIONAL

10

OPTIONAL EQUIPMENT

Available Options

To accommodate testing requirements of various battery installation configurations, AVO International offers the following optional equipment for the BITE 2 and BITE 2P.

Current sensor—Miniature clamp-on CT with 0.5-in. (12-mm) opening for use in small cabinets. This current sensor has shrouded banana-jack connections and includes a 2.5 ft (0.75 m) lead.

Current sensor—RopeCT™: In some battery installations, the buswork is too big for the standard 2 in. (50 mm) **CT** to close. There are two lengths, 24 in. (60 cm) and 36 in. (90 cm) to make 8 in. (20 cm) and 12 in. (30 cm) diameter circles. Because they are flexible, they can adapt to almost any buswork configuration.

Bar code wand—for use with the receiver's 7-pin connection as a means of electronically scanning cell, location, and operator identification. This option includes a wand and prompt sheets with alphanumeric characters for scanning. Windows®-based software for producing bar code labels using a personal computer and printer is also available as a separate option.

Extended source leads—30 and 40 ft (9 and 12 m).

Extension cable—20-ft (6 m) for clamp-on current sensor (CT).

Probe Extensions—These are used to extend the length of the receiver and potential probe to reach racked and cabinetized batteries found primarily in UPS systems. The basic kit includes two adapters, two 12-in. (30-cm) extensions and three pairs of tips. The tip configurations are straight, 90° bend and 180° bend. The tips are hardened steel to break through oxide coatings easily.

Canvas carrying case—for the BITE 2 **transmitter**.

Digital Hydrometer—the DMA-35N is designed to easily take specific gravity readings and store them in up to eight tests and up to 1,024 readings.

Transit cases—heavy-duty cases to properly protect the instruments during shipment.

Custom designed lead sets may also be possible if kept within strict safety guidelines and within the operating specifications of the instrument.

Contact AVO International for assistance before attempting to use the BITE 2 or BITE 2P in a customized design.

AVO INTERNATIONAL

APPENDIX A: TECHNICAL SPECIFICATIONS

Application

The BITE 2/2P can test lead-acid and nickel-cadmium cells of less than 7000 Ah capacity.

Tests on most battery systems require the standard clamp-on current sensor (CT) with a 2-inch opening.

Maximum total voltage at BITE2/2P transmitter current source connections is 275 V dc (larger battery systems can be sectioned to accommodate this specification).

Electrical

BITE 2 and BITE 2P Transmitters

Supply Voltage:

IEC 1010-1 Class I, Installation category II

Cat Nos. 246002 & 246004: 100 to 265 V, 50/60 Hz, 200 VA max

Source Output Current:

IEC 1010-I Installation category I

10 A nominal, 50/60 Hz operation

Output:

6.50 V dc @ 1.10 A dc charging (max)

9.60 V dc open circuit

Maximum Battery Test Voltage:

275 V dc at transmitter source lead terminals

Receiver

Precision:

ac impedance	± 0.3%	one sigma
dc voltage	± 0.1%	one sigma

Accuracy:

ac impedance	± (5% of rdg + 1 LSD)
dc voltage	± (1% of rdg + 1 LSD)

Resolution:

dc voltage

(0 to 2.5 V)	1 mV
(2.5 to 25 V)	10 mV

ac impedance

(0–1.000 mΩ)	1 μΩ
(1-10.00 mΩ)	10 μΩ
(10-100.0 mΩ)	100 μΩ

Supply:

4.8 V dc, 800 mAh, quick-charge nickel-cadmium battery pack

Battery Pack Life, Full Charge:

5 hours continuous

Maximum Voltage Between Potential Probes:

25V dc

Fuses

Function	Location	Type
Primary (Cat No. 246002) Single Pole	J1	T, 2A, 250 V 5 mm x 20 mm
Primary Double Pole	J1 Connector Panel	T, 2 A, 250 V 5 mm x 20 mm
Secondary Double Pole	Internal XF1, XF2	ATM 15, 600 V 10.3 mm x 38.1 mm
Leads (Cat No. 246002) Double Pole	Source Leads	ATM 15, 600 V 10.3 mm x 38.1 mm

Mechanical

Dimensions

BITE 2 Transmitter Enclosure	14 x 10.5 x 6.5 in. (L x W x D) (36 x 27 x 16 cm)
BITE 2P Transmitter Enclosure	18.5 x 14.6 x 7.5 in. (L x W x D) (47 x 37 x 19 cm)
Receiver Enclosure	7.25 x 11.25 x 2 in. (irregular shape)

BITE 2P instrument includes standard accessories.

Weight (Total)

BITE 2 Transmitter:	18 lb. (8.2 kg)
BITE 2P Transmitter Only	29 lb. (13 kg)
Receiver:	1.6 lb. (0.72 kg)

Receiver Display

Digital LCD meter, 5 x 7 dot matrix, 2-line z 16 character, electroluminescent backlighting,

2.19 in. (55.7 mm) x 0.43 in. (11 mm) viewing area, displays measured parameters in dark numbers on an electroluminescent background. Contrast adjustable from menu selection

Commercial temperature and humidity ranges for the LCD will limit the useful measurement environment.

Printer

BITE 2	None
BITE 2P	The BITE 2P has a built-in printer with a 4.25 in. (110 mm) printing width. Thermal paper for the printer, as currently stocked by AVO International, is listed in the Replaceable Parts List, Appendix B.

Environmental

Operating temperature range: 32 to 105°F (0 to 40°C)

Storage temperature range: -5 to 130°F (-20 to 55°C)

Humidity: 20 to 90 % relative humidity, noncondensing

Accessories - Standard

- **Current source leads (transmitter to battery):** two 14 AWG standard copper leads with acid resistant insulation.

Wire rating	600 V dc
Length:	20 ft (3.0 m)
Termination (transmitter):	4-pin, shrouded
Termination (battery):	Bulldog-type Mueller clips
Fuse (Cat. No. 246003-47):	15 ATM, 600 V (each conductor)

- **Current sensor:** clamp-on CT with 2-in (50.8 mm) opening.

Wire rating	600 V dc
CT ratio:	1000:1, 4% accuracy
Length:	5 ft (1.5 m)
Termination (transmitter):	Nonmetallic push lock, 7 pin
Termination (CT):	Direct connection

- **CT Extension cable:** for clamp-on current sensor (CT).

Wire rating	300 V
Length:	6 ft (1.8 m)
Termination:	Nonmetalic push lock 7 pin, both ends

- **Accessory bag:** for receiver, charger and test leads. (BITE 2)

- **Communication cable:** interconnects **receiver** to **transmitter** or personal computer serial port.

Wire rating	300 V dc
Length:	6 ft (1.8 m)
Termination (receiver):	Nonmetallic push lock 7-pin
Termination (computer):	Receptacle 9-pin

AVO INTERNATIONAL

APPENDIX B: REPLACEABLE PARTS

Catalog Numbers 246002B and 246004

Replaceable Part – Standard Accessory	Part Number
AC line cord, 8 ft (2.4 m)	17032-7
BITE 2 receiver	246301
BITE 2 transmitter	30044-600
BITE 2P transmitter	30044-100
Current source lead set, fused	
10 ft (3 m)	246310
20 ft (6 m)	29386-2
Fuse, Current Source Lead, ATM 15, 600 V, 10.3 x 38.1 mm	29440-1
Primary fuse, 2 AT, 250 V, 2A	2567-27
Secondary fuses, 15 ATM, 60 V, 10.3 x 38.1 mm	29440-1
Spare battery pack (receiver), Ni-Cd, 800 mAh	30654
RTC battery	35569
AVOLink Data Management Software	35303-2
Instruction manual, BITE 2-2P	AVTM246004
Canvas accessory bag (BITE 2)	29996

Catalog Numbers 246002B and 246004

Replaceable Parts – Optional Accessories	Part Number
Clamp-on current sensor, CT with 0.5 in (12.7 mm) opening, 2.5 ft (0.76 m) lead	246034
Current source lead set, fused	
30 ft (9.1 m)	246330
40 ft (12.2 m)	246340
Extension cable for CT, 20 ft (6 m)	246005-8
Single contact probe cable	29435-2
Bar Code Wand Kit	246201
Bar code labeling software for WINDOWS	33506-2
Canvas carrying case, instrument	218746
Thermal printer paper	26999

How to Order Replaceable Parts for the BITE 2/2P

To order one or more replaceable parts for the BITE 2P, call 1-610-676-8500. Ask for Customer Service.

AVO INTERNATIONAL

GLOSSARY

Use only in accordance with this Instruction Manual.

active test	The measurements for the cells or battery string to which the transmitter is currently connected
baseline	A value established as a reference for measurement; a benchmark.
BITE	Battery Impedance Test Equipment
cell	A receptacle containing electrodes and an electrolyte either generating electricity by chemical action or for use in electrolysis.
cell reversal	A change in the normal polarity of a cell, typically occurring during a deep discharge.
deviation	The percentage by which the measured impedance of a cell differs from the average impedance for the entire battery string.
equivalent circuit	An arrangement of circuit elements that has characteristics, over a range of interest, electrically equivalent to those of a different circuit or device (used for convenience of analysis).
float	A method of operation for storage batteries in which a constant voltage is applied to the battery terminals sufficient to maintain an approximately constant stage of charge.

Hi_A	Screen display for ripple and current measurement (I > 15 A).
LCD	Liquid Crystal Display.
Lo_A	Screen display for BITE 2/2P current measurement (I < 3.0 A).
LOW BATTERY	Receiver screen display indicating low battery-pack capacity
OVER VOLTAGE	Overrange—screen display for dc terminal voltage, impedance, and strap resistance.
RTC	Real-Time Clock.
ripple	The alternating component whose instantaneous current values are the difference between the average and instantaneous values of a pulsating unidirectional current.
rms	Root mean squared.
stationary battery	A storage battery designed for service in a permanent battery location.
sulfating	Deposit formation of a white scale containing lead sulfate (on the plates of a storage battery).
UPS	Uninterruptible Power Supply.
variation	The percentage by which a value exceeds or falls short of an established baseline or benchmark.

AVO INTERNATIONAL

INDEX

7-PIN connector, 3-9
ac impedance
  measurement range, 1-4
Accessories, 1-4, 1-5
active test, 4-14, 4-19, 1
Analog Meter, 3-2
ARROW keys
  receiver, 3-7
Batteries
  receiver, 9-3
Battery charger
  7-PIN connector, 3-9
BITE 2
  accessories, 1-4
  components, 1-4
BITE 2P
  accessories, 1-5
  components, 1-5
Cell measurements, 4-14
cell reversal, 1
Charger, battery
  7-PIN connector, 3-9
Clock
  setting in the receiver, 8-3
Clock, setting, 8-3
Communication cable
  7-PIN connector, 3-9
Connectors, 3-1
Controls, 3-1
Date
  setting in the receiver, 8-3
Disconnecting the BITE 2/2P, 4-22
ENTER key
  receiver, 3-7
Filtering, 1-4
Fuses
  in transmitter, 9-7
High Current, 2
IEC-1010-1, 2-1
Indicators, 3-1
Interpreting test results
  short-term interpretation, 7-3
  temperature corrections, 7-4
Language
  selecting for the receiver, 8-3
line frequency, 8-1, 8-5
LOW CURRENT, 2
Maintenance, 9-1
Measurement range
  ac impedance, 1-4
  dc voltage, 1-4
Measuring
  the cell, 4-14
  the strap, 4-14
Menus, 3-1
Options
  setting in the receiver, 8-1
Performing tests, 4-1
  splitting the strap, 4-9
  taking measurements, 4-14
Power source
  required connection, 2-3
power switch, 2-1
Power switch
  receiver, 3-6
  transmitter, 3-3
Powering down the BITE 2/2P, 4-22
Ready indicator, 3-3
Receiver
  options, 8-1

powering down, 4-22
selecting the language, 8-3
setting the clock, 8-3
Replacing batteries
receiver, 9-3
S1 power switch, 3-3
Safety requirements, 2-1
Sectioning a battery, 5-3
with parallel strings, 5-5
Splitting the strap, 4-9
Strap
splitting, 4-9
taking measurements, 4-14
Temperature
corrections, 7-4
Test procedures, 4-1
Time
setting in the receiver, 8-3
Transmitter
powering down, 4-22
Wand
7-PIN connector, 3-9

AVO INTERNATIONAL

ADDENDUM

Instructions for Using

AVO®Link

Version 1.2

Data Management Software for

BITE 2 • EBITE • MBITE

AVO®Link

for BITE 2 • EBITE • MBITE

Instructions

Copyright © 2000 AVO International. All rights reserved.

The information presented in this manual is believed to be adequate for the intended use of the product. If the product or its individual instruments are used for purposes other than those specified herein, confirmation of their validity and suitability must be obtained from AVO International. Refer to the warranty information included at the end of this instruction manual. Specifications are subject to change without notice.

WARRANTY

Products supplied by AVO International are warranted against defects in material and workmanship for a period of one year following shipment. Our liability is specifically limited to replacing or repairing, at our option, defective equipment. Equipment returned to the factory for repair must be shipped prepaid and insured. This warranty does not include batteries, lamps, or other expendable items, where the original manufacturer's warranty shall apply. We make no other warranty. The warranty is void in the event of abuse (failure to follow recommended operating procedures) or failure by the customer to perform specific maintenance as indicated in this manual.

AVO INTERNATIONAL
P.O. Box 9007
Valley Forge, PA 19485-1007
610-676-8500

AVO INTERNATIONAL

CONTENTS

INTRODUCTION **1**

About AVOLINK… **1**

System Requirements for PC **2**

INSTALLATION **3**

USING AVOLINK WITH THE BITE **11**

Connecting the BITE to the PC **11**

Starting AVOLINK **11**
The AVOLINK Window 12

Transferring the BITE Test Data **13**
Prepare the PC For Data Transfer 15
Transfer Data 16
Disconnect the BITE from the PC 19

Viewing and Printing Test Data **19**

COMMUNICATIONS FUNCTIONS **23**

Setup Serial Port **24**

Test Communications **26**

Printer Setup **27**

AVOCOM 32 ..... **28**

AVO
MULTI-AMP BIDDLE MEGGER
AVO INTERNATIONAL

1

INTRODUCTION

About AVOLINK…

AVOLINK is AVO International's software program for use with:

- BITE 2, EBITE and MBITE (battery impedance testers)
- Three-Phase TTR (transformer turn ratio test set)
- DART Cable Fault Analysis System

> **NOTE:** *This manual refers to any one of the above as a* ***remote device*** *and refers to the three battery impedance testers as* ***the BITE.***

AVOLINK allows you to transfer test data from the remote device to a personal computer (PC). You can save test data from the remote device and view it on the PC in a viewing format appropriate for the data. With AVOLINK, you can transfer DART wave forms to a PC and save them for future use.

AVOLINK software consists of two programs—AVOLINK, which provides the interface to the remote device, and AVOCOM32, which provides the communication to the remote device. AVOLINK takes care of starting and terminating AVOCOM32. Your AVOLINK installation diskettes or CD will install both AVOLINK and AVOCOM32. For additional information, see "AVOCOM 32" on page 28.

A null-modem serial cable connects the remote device to the PC. The remote device and the PC must operate with the same communication parameters.

System Requirements for PC

Operating system:	Windows NT 3.1 or later; Windows 95 or later
Processor:	80386 or higher
Monitor resolution:	VGA or higher
Display properties:	600 x 800 and small fonts
RAM:	16 M
Communications port:	9600 baud or better
Storage	A 3½-inch inch floppy disk drive or CD-ROM

AVO INTERNATIONAL

2

INSTALLATION

The AVOLINK software installation is typical of Windows® programs.

1. Close all open programs. If your virus protection program is running, disable it.

2. Insert the the AVOLINK CD in your CD-ROM drive (usually D:), or insert the AVOLINK #1 diskette in your diskette drive (A: or B:).

3. AVO Link Setup should automatically run and take you to the Welcome screen. If so, go to step 5. If not, continue with step 4.

4. Double-click the **My Computer** icon on the Windows desktop to display the **My Computer** menu. Double-click **Control Panel**.

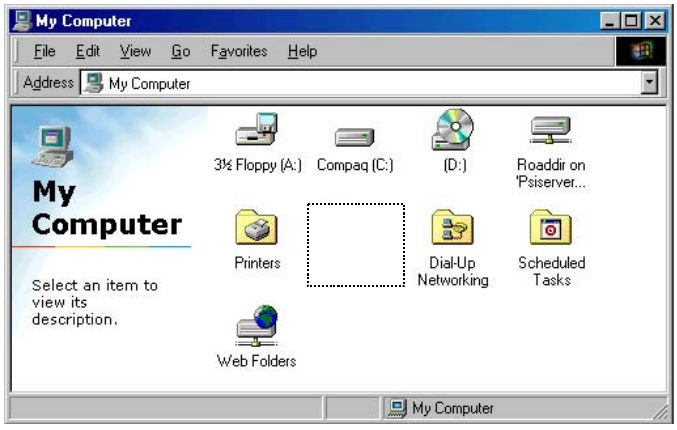

My Computer Menu

NOTE: *Screens may be different depending on operating system.*

5. Double-click Add/Remove Programs.

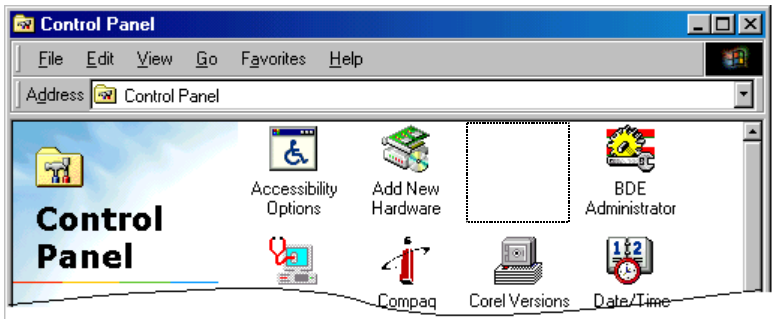

Select Add/Remove Programs

6. In the **Add/Remove Programs Properties** box, click **Install**.

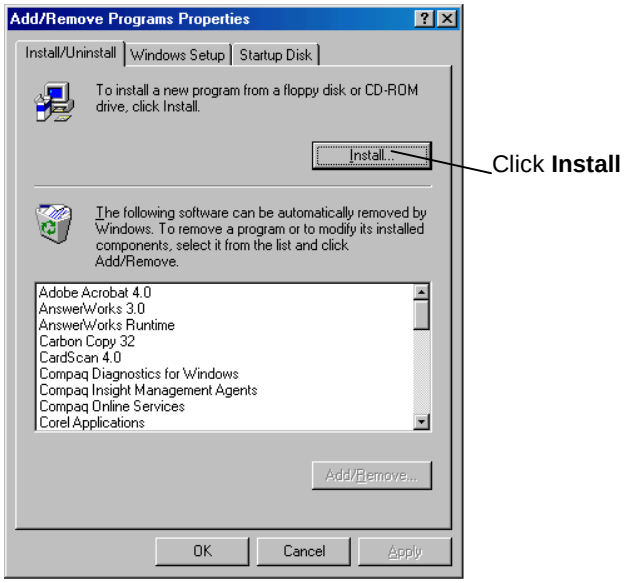

Add/Remove Programs Properties

7. Click **Next,** then **Finish** to begin installation.

Install Program from Floppy Disk or CD-ROM

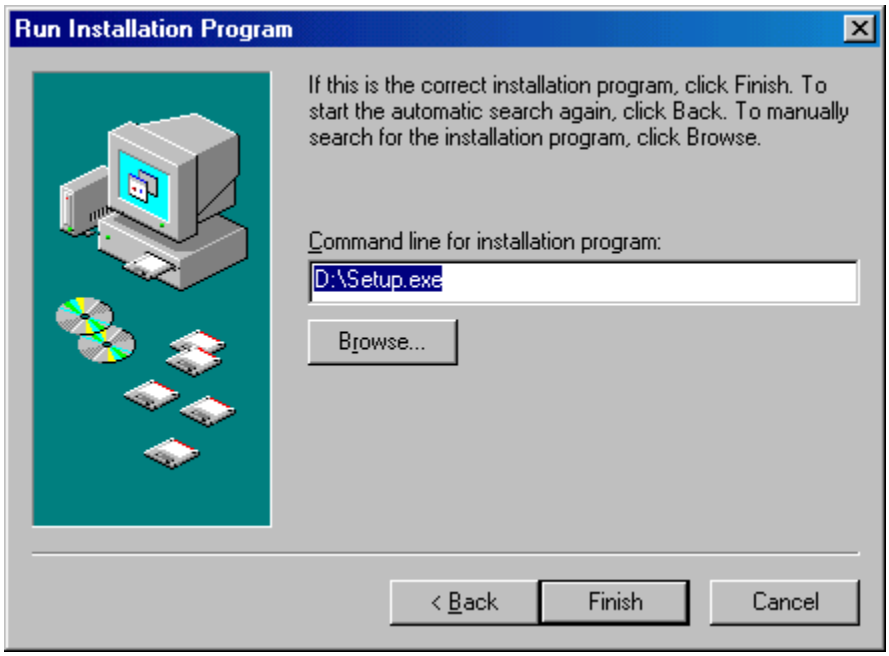

Run the Installation Program

8. The first screen reminds you to close all open programs if you have not yet closed them. Click Next to continue.

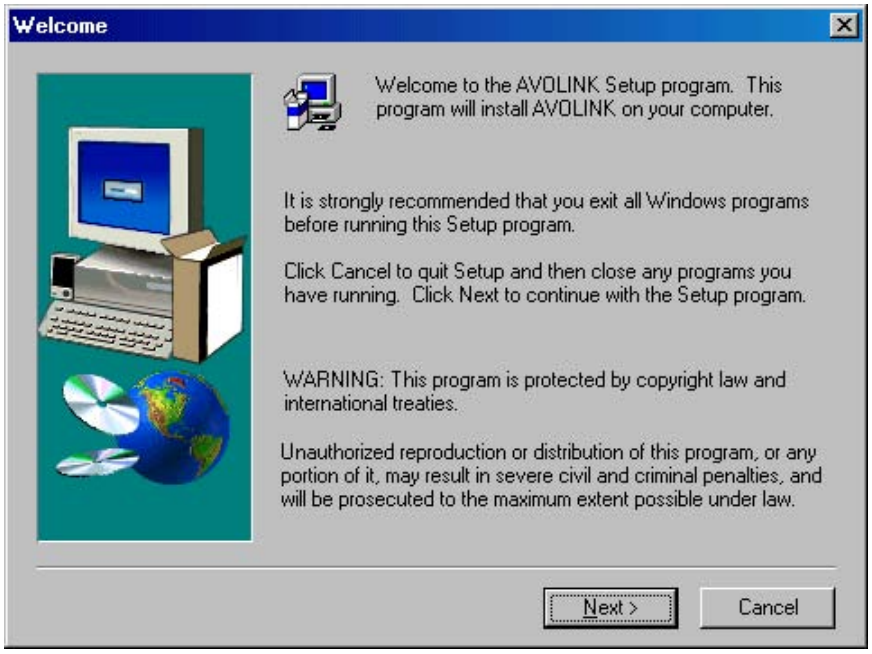

Welcome Screen

9. The software license agreement displays. Click **Yes** to continue.

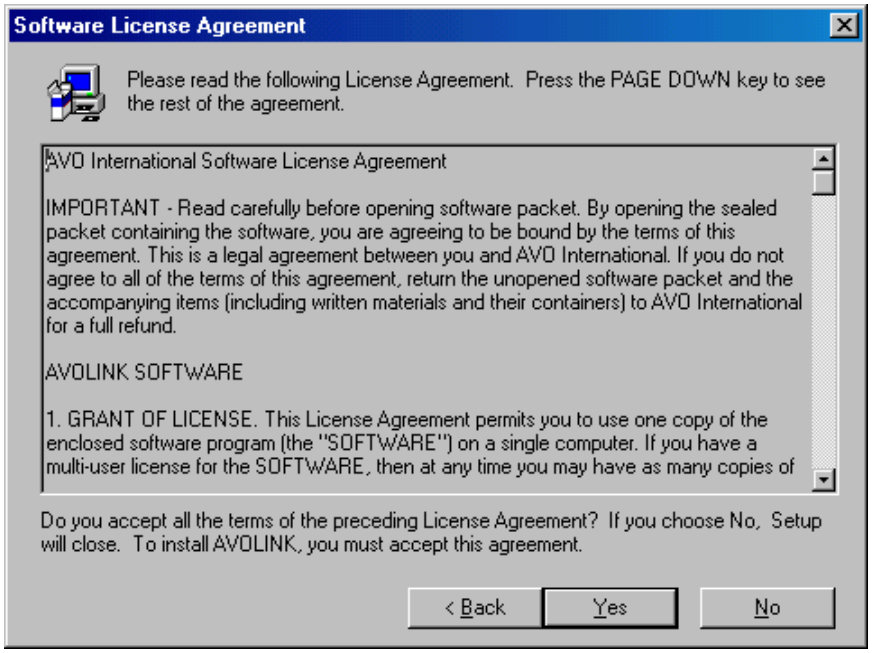

Software License Agreement

10. A disclaimer displays. Click **Yes** to continue with installation.

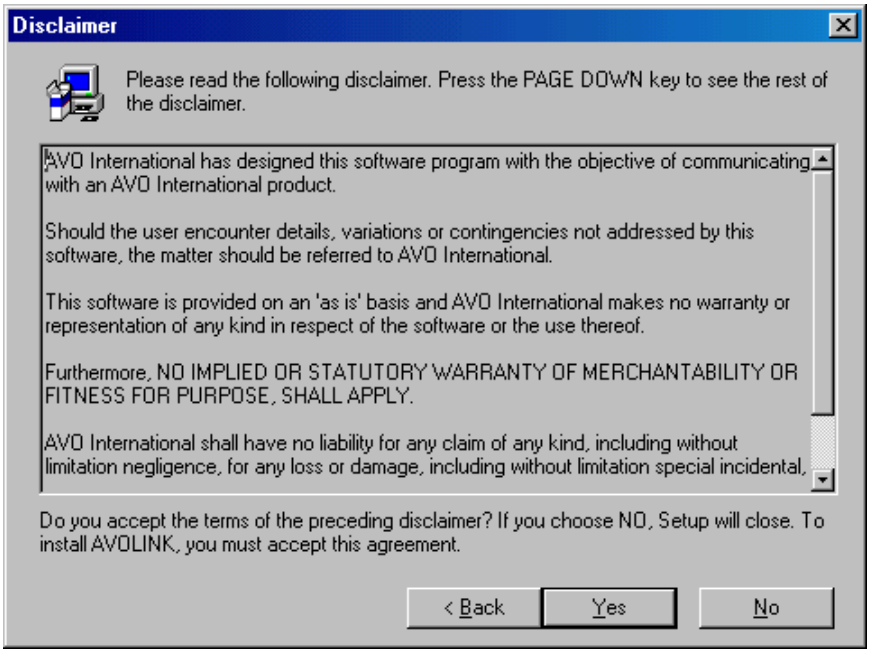

Disclaimer

11. The next dialog box asks you to choose the destination location—the directory where the program will reside. We recommend that you accept the default location by clicking **Next**. (If you must choose a different directory, click on **Browse** and select the desired location.)

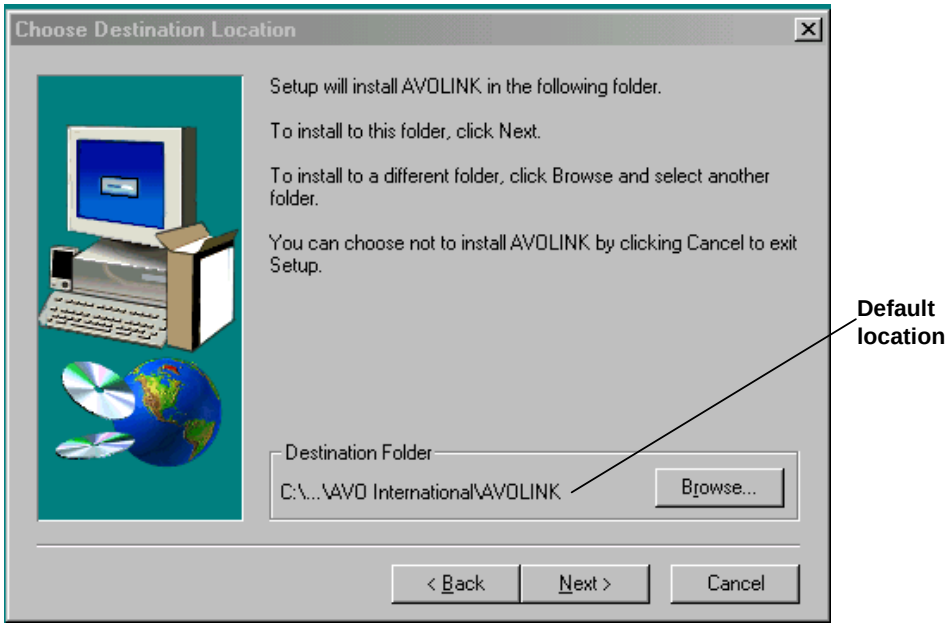

Choose Destination Location

12. Select the AVOLINK program folder by clicking **Next**.

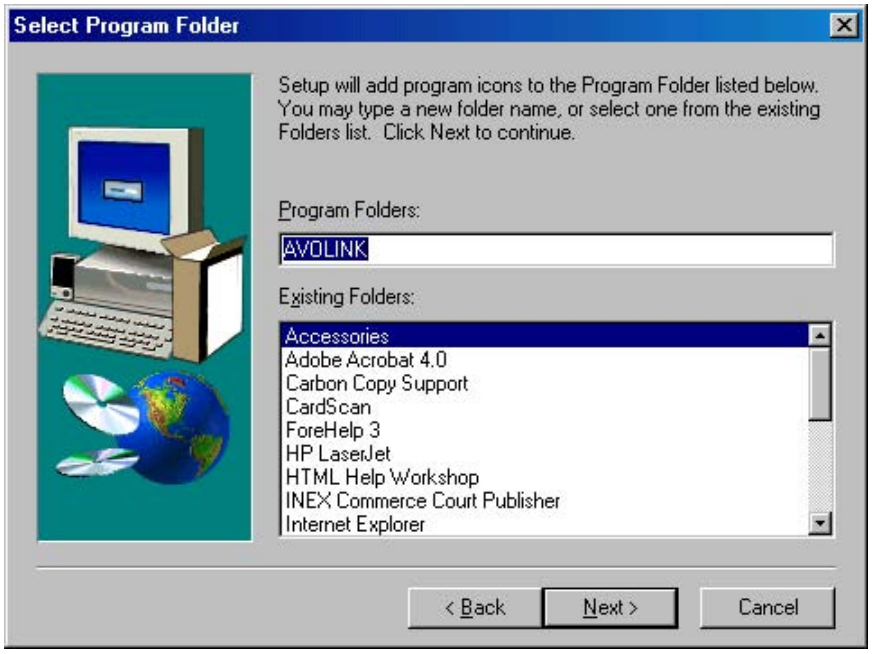

Select Program Folder

13. The program begins to copy files, as indicated by the progress bars.

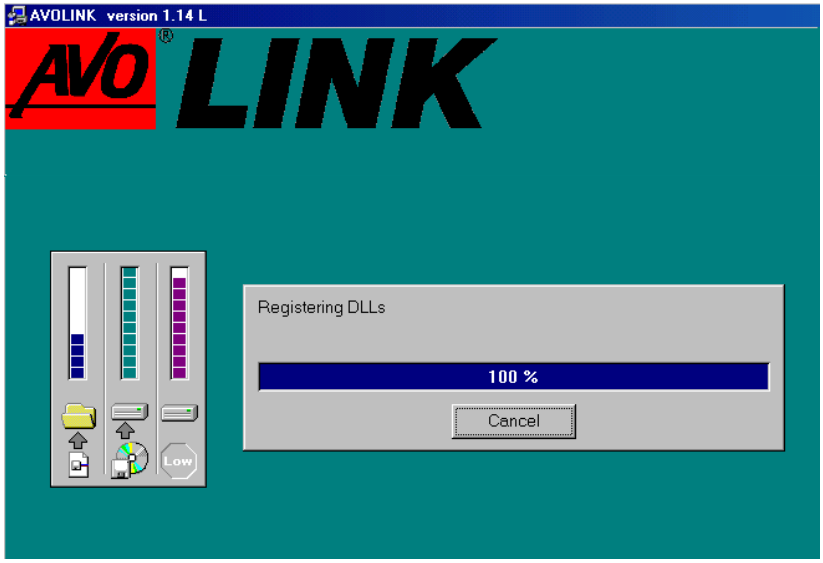

Copying Files

14. If you are installing with diskettes, you will be prompted to insert the next floppy disk. When all files are copied, a dialog box will state that the setup is complete. Click **Finish** to exit Setup.

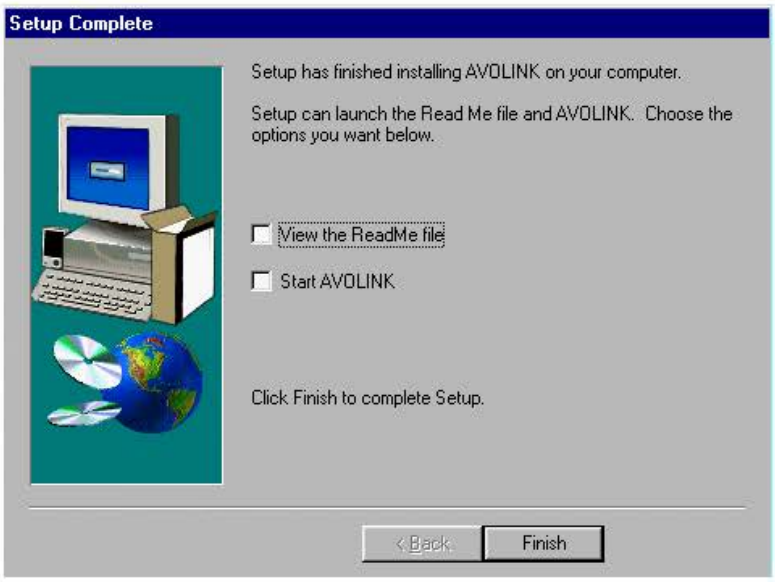

Setup Complete

15. Remove the diskette (or CD) from your diskette (or CD-ROM) drive. AVOLINK is now ready to help you manage your test data.

AVO
MULTI-AMP BIDDLE MEGGER
AVO INTERNATIONAL

AVO INTERNATIONAL

3

USING AVOLINK WITH THE BITE

Connecting the BITE to the PC

The BITE is physically connected to the PC by means of a null-modem serial cable. You may power up the BITE before or after connection to the PC, but be sure the BITE is properly and securely connected to the PC before starting AVOLINK.

CAUTION

Make sure the BITE is disconnected from any battery under test before connecting the BITE to a PC.

For the BITE2 and the EBITE Receivers: Insert the plug of the null-modem cable (30648) into the 7-pin connector on the BITE receiver. Then insert the 9-pin end of the null-modem cable into the COM port on the PC.

NOTE: *Refer to EBITE manual for transferring data from Transmitter***.**

For the MBITE: Connect a null-modem cable (33533) into the J5 connector on the MBITE connector panel. Insert the other end into the COM port of the PC.

Starting AVOLINK

Before starting up the AVOLINK program, be sure that the PC and the BITE are securely connected by the null-modem cable.

1. Access the AVOLINK program by clicking on **Start**.
2. From the Programs menu, select **AVOLINK** and then, from the submenu, **avolink.**

AVOLINK automatically sets the communication parameters at 9600 baud, 8 data bits, 1 stop bit and no parity. If you need to change the parameters, use the **Setup Serial Port** button, as described under "Setup Serial Port" on page 24.

The AVOLINK Window

When you first access the AVOLINK program, the AVOLINK window displays with four tabs: **Login, Send to…, Get From, and Maintenance**.

AVOLINK Startup Screen

Only two tabs are active for the BITE. They are discussed in greater detail under "Transferring the BITE Test Data" on page 13.

Exit

Clicking on the Exit button will close the AVOLINK program.

Help

Click on Help at any time to open the AVOLINK Help file. This is a Windows Help file, which contains Contents, Index and Find tabs to assist

you with the program. The Help file also provides hypertext links to help you move among topics.

About

Click on About for information regarding the version of AVOLINK that is installed on your computer.

Transferring the BITE Test Data

When you start the AVOLINK program to transfer BITE test data, the AVOLINK window displays with the **Maintenance** tab selected. Click on the **Select Device** drop-down list and select BITE. The **Get From** tab will now display as **Import data**. Click on the **Import data** tab.

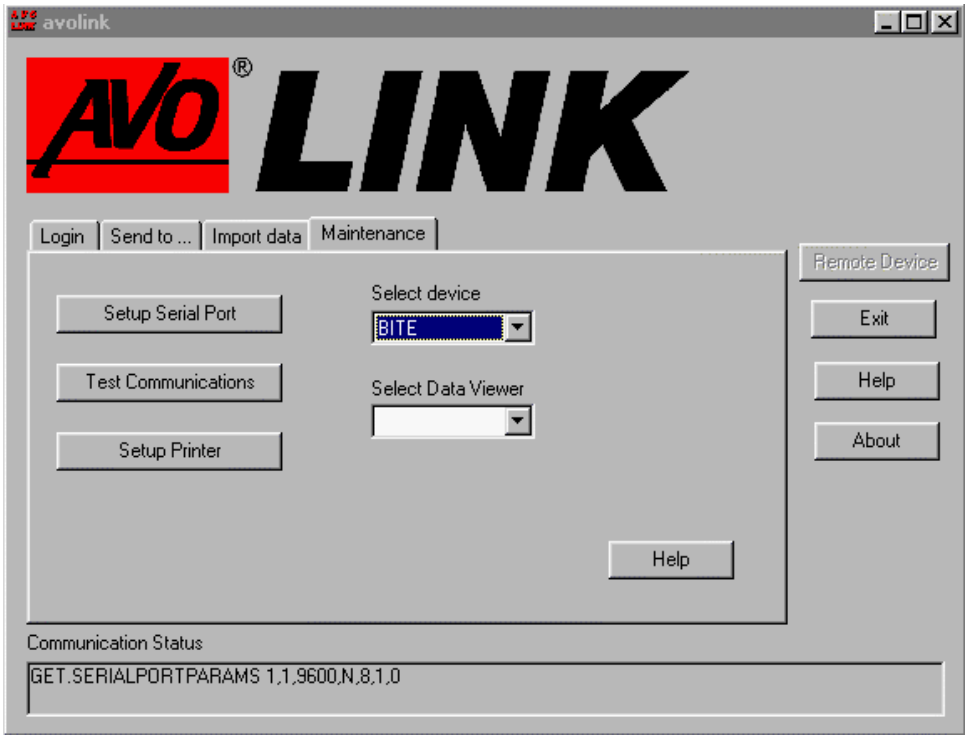

Maintenance Tab

Import Data Tab

The features on this tab enable you to

- transfer test data from the BITE to a PC.
- specify the location on the PC where the BITE test data files will be stored.
- assign a unique filename to the test data to be transferred.
- view the transferred data in Notepad or Excel.

As the transferred data is received by the PC, it is stored as a **.raw** data file. After all the data is received, it is converted into the following formats:

- Text file with a **.txt** extension
- Spreadsheet file with an **.xls** extension
- Battery Maintenance file with an **.csv** extension

Each transfer of test data can contain more than one test. For each test transferred, the system creates three files, one file in each of the three formats mentioned above. The system adds a two-digit number, starting at 01, to each file name (to indicate the test number).

Prepare the PC For Data Transfer

1. First, specify the storage location for the imported data. The default folder is C:\Avolink\BITE data.

Specify Path to Store the Data File

To select a different folder, click on **Browse** and select a folder. The selected folder displays in the **Path to store file of test data** window.

2. Next, specify the name of the file that will contain the test data. The extension for the file name must be **.raw**. AVO Link will automatically add the extension.

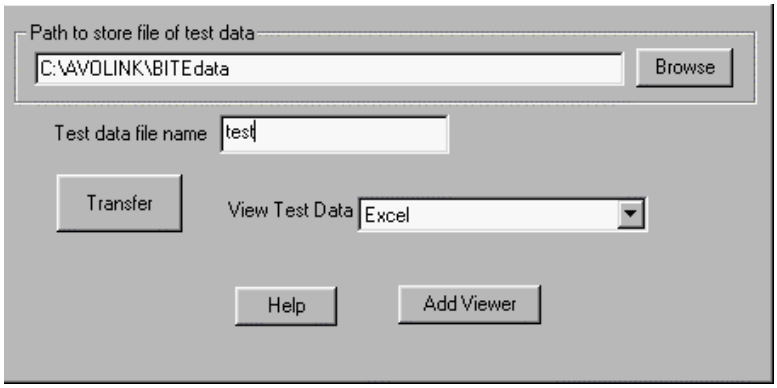

Name the Test Data File

Transfer Data

> **NOTE:** *Before transferring, you may want to disable your screen saver (if you are using a screen saver). If you have a screen saver running at the same time as the transfer, the screen saver may interrupt the transfer and cause it to abort.*

1. To begin the transfer, click the **Transfer** button. The **Transfer** button toggles to **Cancel**, and the **Communication Status** window at the bottom of the AVOLINK window indicates it is waiting for data.

Transfer Button Pressed

2. Then, from the BITE, start sending the data. Each of the two following subsections describes how to send the data from one of the BITE devices.

- Sending data from the EBITE and BITE2 receivers
- Sending data from the MBITE

Sending data from the EBITE and BITE2 Receivers

Since you connected the receiver to the PC before powering up the receiver, the display on the receiver will show the Transmit Data screen:

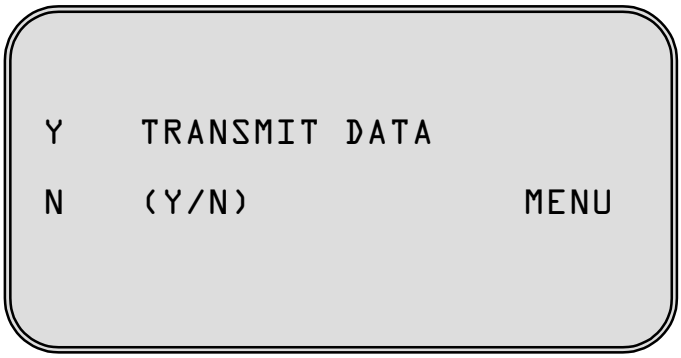

Transmit Data Menu

1. Press ▲ on the receiver to select **Y**. The receiver prompts you to select **TRANSMITTER** or **PC**.

Select PC

2. Press ▼ on the receiver to select **PC**. The screen on the receiver tells you to wait as the test results are transferred. When the transfer is complete, you are prompted to clear the data from the BITE.

Refer to the instruction manuals for the EBITE and BITE2 for information about deleting data after transferring.

Sending data from the MBITE

1. Press [F] on the MBITE to access MENU 1.

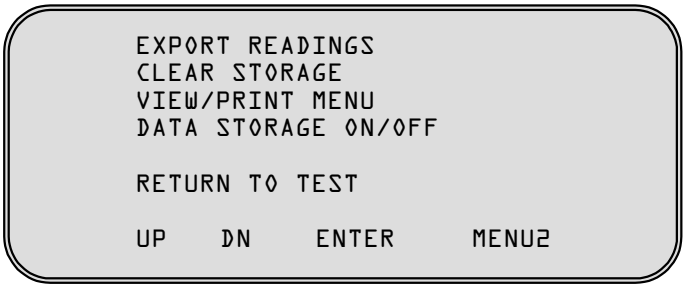

Menu1 Screen (Export Data)

2. Press [▲▽] or [△▼] on the MBITE to select **Export Readings**. Then press [↵] to start exporting data. The MBITE displays the following screen. When the transfer is complete, you are prompted to clear the data from the MBITE.

Export Data Screen

Refer to the instruction manual for the MBITE for more information about deleting data after transferring.

Canceling a Transfer

To cancel a transfer, click **Cancel** on the AVOLINK **Import Data** tab. The **Cancel** button toggles to **Transfer**, and the Communication Status window indicates it is no longer waiting for data.

Cancel Button Pressed

If the data transfer is aborted, the .raw file will contain all the data that was transferred before the abort occurred. The .txt and .xls files will not be created.

Disconnect the BITE from the PC

After the transfer is complete, disconnect the null-modem cable from the BITE and from the PC.

Viewing and Printing Test Data

To view the data files that you have transferred, click on the **View Test Data** drop-down list. When you select a program from the list, it automatically opens and is ready to display the data. Open the saved data file from within the viewing program.

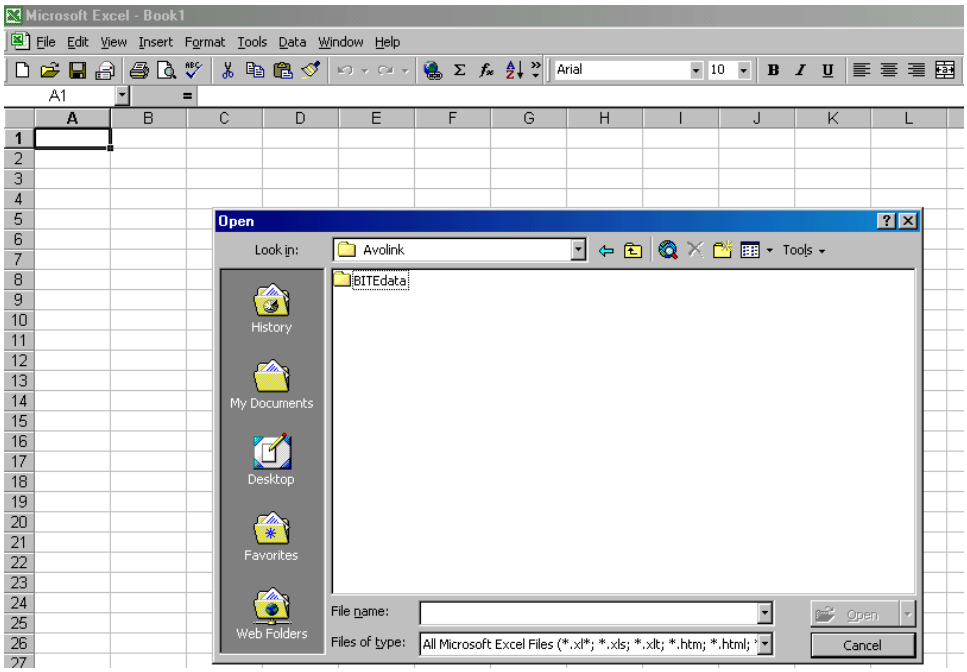

Open Data File From Viewing Program (Excel Shown Here).

You can add a viewing program to the **View Data List** by clicking on **Add Viewer.** You can locate the viewing program in one of two ways.

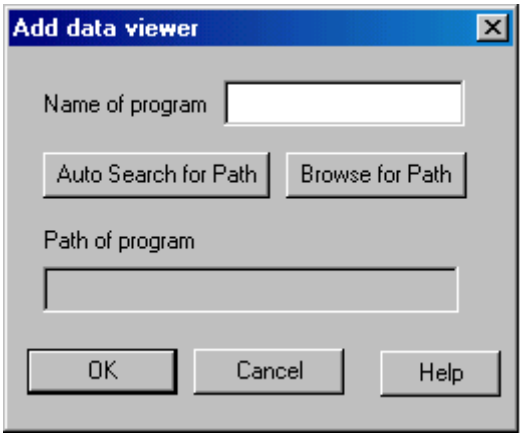

Adding a Data Viewer

AutoSearch for Viewer

1. Type the name of the viewing program in the **Name of program** box.
2. Click on **Auto Search for Path**. AVOLINK will search for the specified program and display the path to the program in the box.
3. Click **OK**.

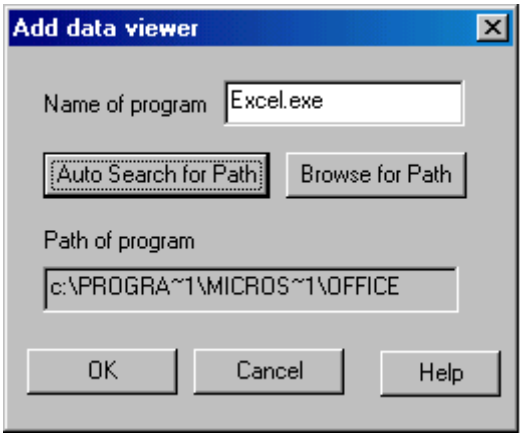

Results of Auto Search

Browse for Path

1. Click on **Browse for Path**, then use the **Select Path** dialog box to find the desired viewing program.
2. Click **OK**.
3. Select the drive, folder and executable file for the viewing program.

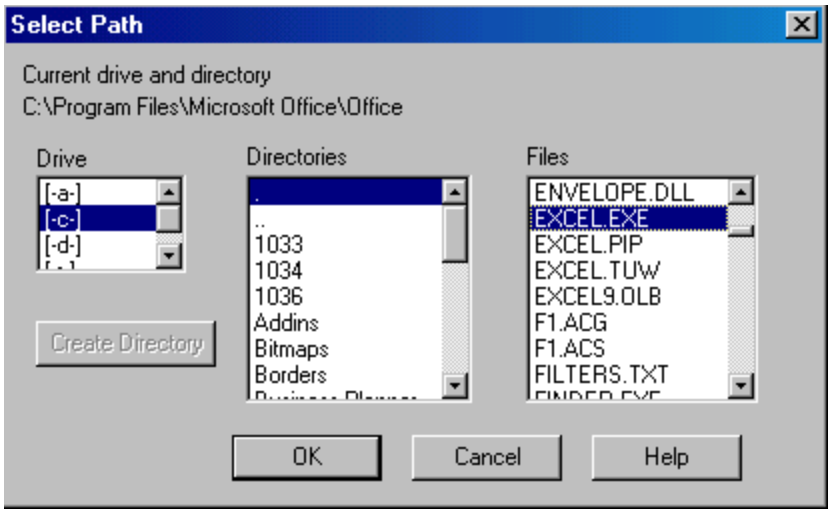

Browse For The Path To The Viewing Program

When you are finished transferring and/or viewing BITE data, click **Exit** on the AVOLINK window to close the program.

MULTI-AMP BIDDLE MEGGER
AVO INTERNATIONAL

4

COMMUNICATIONS FUNCTIONS

The remote device and the AVOLINK software must always operate with the same communications parameters. If you find it necessary to change the communications parameters for AVOLINK, you can do so from the Maintenance tab.

Click on **Maintenance** to display the Maintenance tab, and select **BITE, TTR** or **DART** from the **Select Device** drop-down list.

Maintenance Tab

Setup Serial Port

When necessary, use this feature to adjust the communications parameters.

1. Click on **Setup Serial Port.**

Setup Serial Port

2. From the drop-down lists, pick the desired communications parameters.

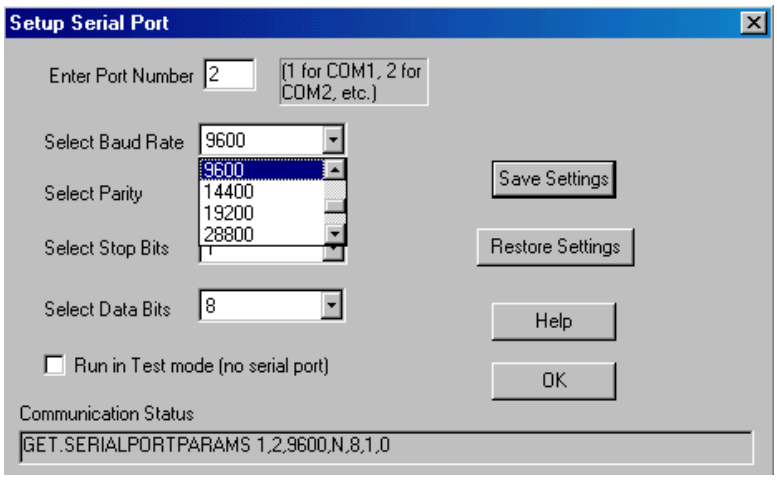

Select Baud Rate

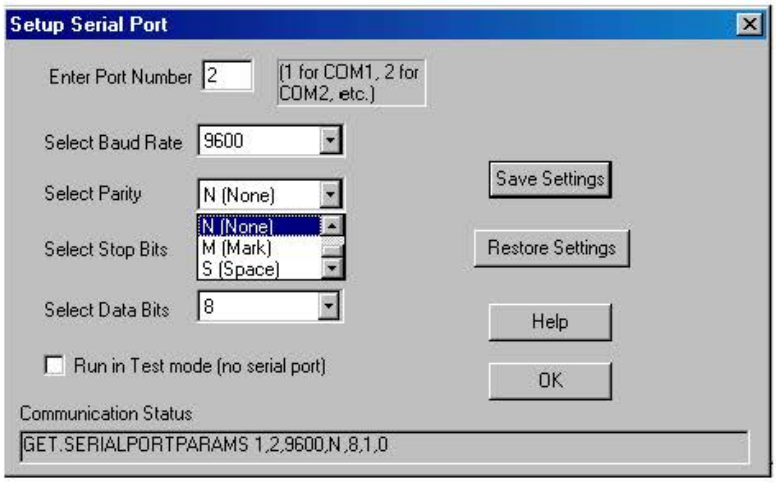

Select Parity

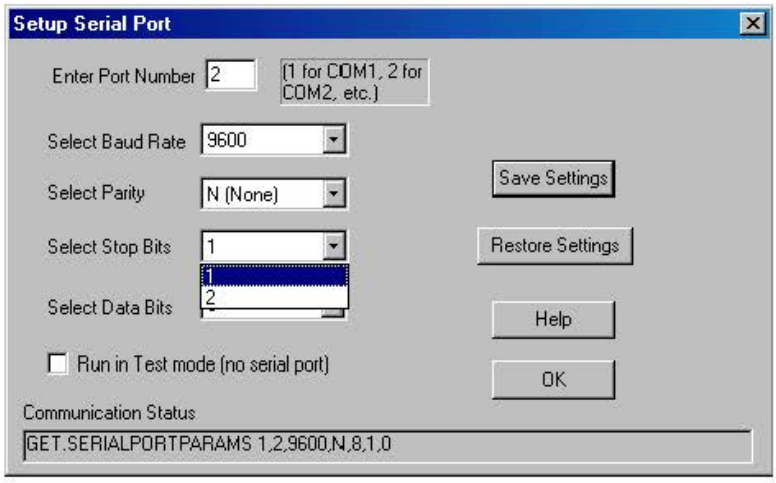

Select Stop Bits

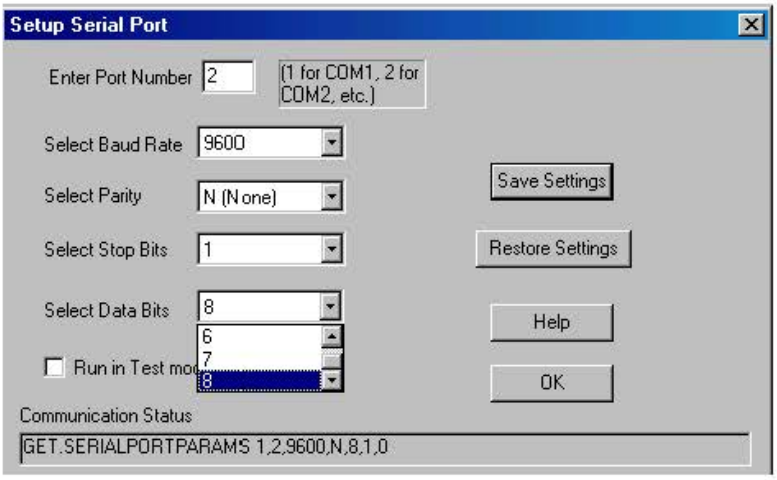

Select Data Bits

- To save the new settings and initialize the serial port, click **Save Settings**.
- To leave the parameters as they were when you accessed the tab, click **Restore Settings.**

NOTE: *Even if you have made changes and have clicked* ***Save Settings****, the settings will be restored to those in effect when you first accessed the tab.*

If the **Run in Test Mode** check box is checked, the serial port is not used and the remote device cannot be accessed.

Run in Test Mode

The Test mode does not support all commands. The commands currently supported are.

```
SET.PASSWORD

SET.SETTINGS

SET.WAVEFORM (NO FILES ARE ACTUALLY TRANSFERRED)

LOGIN

LOGOUT

GET.SETTINGS

GET.PRINTERLIST
```

Test Communications

The Test Communication window is strictly for testing purposes. It works independently of all the other windows. For example, if you enter the Login command here, the program will respond as it would if you were not connected to a remote device.

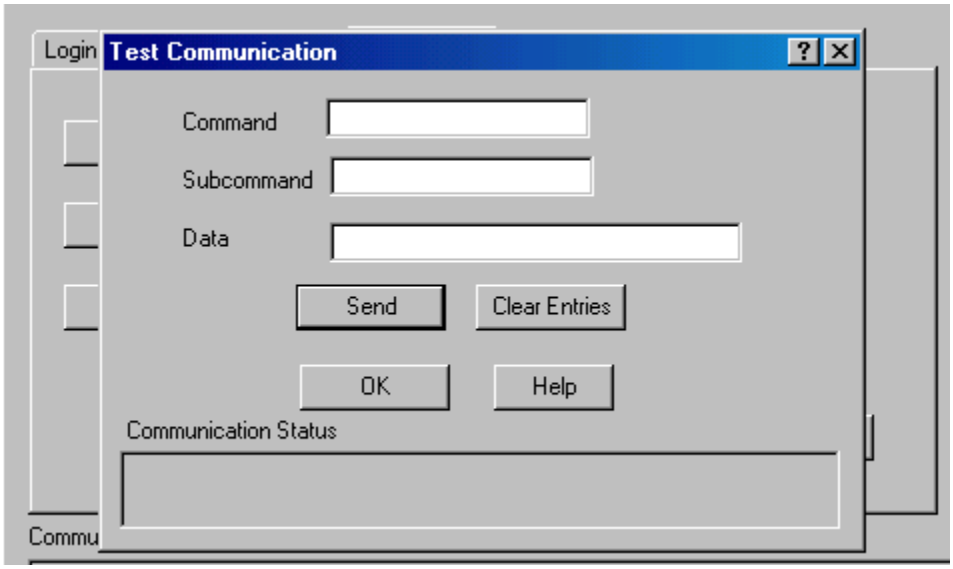

Test Communication

Enter the command, subcommand, and data that you wish to send to the remote device. If there is no subcommand or no data, just leave those fields blank. Commands and subcommands can be upper or lower case or mixed case.

The data must adhere to the following rules:

- The data items must be separated by commas.
- If a data item contains a dot (.), a comma (,) or a space, it must be enclosed in double quotes (").

Select the **Send** button to send the command to the remote device.

The **Clear Entries** button clears the **Command, Subcommand** and **Data** fields.

The Communication Status window shows whether the command succeeded or failed.

Printer Setup

Click on the **Printer Setup** button to display the print dialog box. The appearance of this box will vary depending on the type of printer that is connected to your PC.

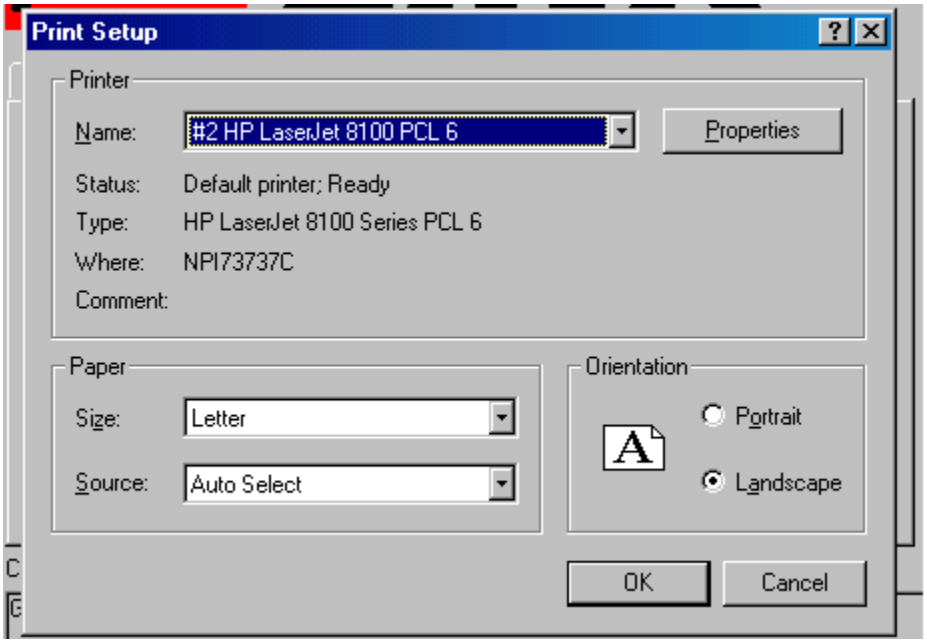

Printer Setup

AVOCOM 32

AVOCOM32 provides the communication to the remote device. AVOLINK takes care of starting and terminating AVOCOM32. If you need to view the communication status, click on **Start, Programs, Avolink, avocom32**. The resulting window shows all commands and responses to commands going between AVOLINK, AVOCOM32 and the remote device. The following abbreviations indicate where the commands and responses are coming from:

RI: Response to command came from the remote device

RO: Command was sent to the remote device

CI: Command was received from the client (AVOLINK)

GENERAL SPECIFICATIONS

The LS790B is a perfect combination of advanced microprocessor driven circuitry and field practical features. Developed from over 20 years of engineering experience and sensor research, the LS790B incorporates 3 sophisticated patented technologies to create the world's most advanced, yet easy to use, refrigerant leak detector available today.

The quick and accurate location of a refrigerant leak is critical to the thousands of professionals who rely on CPS for their leak testing needs. Designed to effectively detect all CFC, HFC, HCFC refrigerants and refrigerant blends, the LS790B remains extremely versatile, even with today's rapid introduction of new refrigerants. A range of ten sensitivity settings and patented sensing circuitry virtually guarantees location of any refrigerant leak of any size.

The portability of the LS790B allows the user access to any suspected leak area, no matter how remote or restricted it may be. An ergonomically shaped body provides a sure grip while the 18" flexible probe bends and twists it's way into almost any position. A multitude of other time saving and practical features provides the professional with the absolute feedback they need to confidently say," the leak is here!"

The following pages contain all of the necessary information you will need to properly operate, maintain or leak test using the LS790B LEAK-SEEKER®. Please take the time to thoroughly read and understand the enclosed points prior to operating the unit. If you have any questions or comments, please feel free to contact our Customer Hotline at 1-(800)-277-3808 anytime from 8AM-5PM EST Monday-Friday.

FEATURES

- Patented Microprocessor Controlled Circuitry
- Patented Ion-Pump® Sensor Enhances Sensitivity & Reliability
- Patented Filter Eliminates False Signals Due to Moisture
- Steel Domed Tactile Feedback Keypad
- Three Individually Selectable Alarm Indicators (Audible Only/Visual Only/or a Combination of Audible and Visual)
- 10 Segment LED Leak Size Indicator
- Detects All Halogenated Refrigerants
- Lock-Out Mode Eliminates Background Contamination
- 10 Selectable Sensitivity Ranges
- 40 Hour Battery Life
- Automatic Power Saver Feature Conserves Battery Life
- Low Battery Indicator
- Certified to SAE J1627
- CE Approved

ADDITIONAL PARTS INCLUDED

- Spare Ion-Pump® Sensor
- Patented Evaporator Filter Housing
- Carrying Case
- Earphone for Noisy Environments
- 4 AA Alkaline Batteries

INSTRUMENT CONTROLS

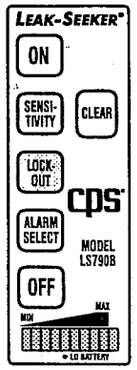

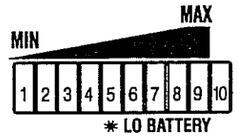

1. **ON/OFF Keys:** Turns unit on or off.
2. **ALARM SELECT Key:** An audible alarm sounds when the unit is initially turned on. Press the ALARM SELECT key once to turn the visual alarm on. Press the key again for a combination of the audible and visual alarms. Pressing the key a third time will return the unit to its initial audible only setting.
3. **SENSITIVITY Key:** The LS790B offers 10 ranges of sensitivity that may be selected depending on the type of refrigerant your working with and the size of the leak. The lowest sensitivity range is automatically selected each time the instrument is switched on. Depress and hold the SENSITIVITY key to change the sensitivity range. The LED will move left to right (MIN to MAX) until the key is released.
4. **LOCK-OUT Key:** Use this feature when faced with searching for a leak in a highly contaminated area. This mode of operation measures and records in memory the highest concentration of refrigerant gas detected since the mode was selected or the CLEAR button was depressed. Any concentration of gas less than the highest recorded concentration is locked-out or ignored, thereby eliminating the effects of background contamination. A distinct two-tone alarm will sound when the probe is in the area of the highest refrigerant concentration. This will be the leak source.
5. **CLEAR Key:** This key is used to accomplish two tasks. First, it is used to clear the memory locations stored in the microprocessor when the unit is in the LOCK-OUT mode of operation. Secondly, it is used to re-calibrate the unit to surrounding ambient conditions.

OPERATING INSTRUCTIONS

SAE J1628 Recommended Procedure
NOTE: On automotive A/C systems, test with the engine not in operation.

1. The air conditioning or refrigeration system should be charged with sufficient refrigerant to have a gauge pressure of at least 340kPa/50psi when not in operation. At temperatures below 15°C/59°F, leaks may not be measurable, since this pressure may not be reached.
2. Take care not to contaminate the detector probe tip if the part being tested is contaminated. If the part is particularly dirty, or condensate (moisture) is present it should be wiped off with a dry shop towel or blown off with shop air. No cleaners or solvents should be used, since the detector may be sensitive to their ingredients.
3. Visually trace the entire refrigerant system and look for signs of air conditioning lubricant leakage, damage, and corrosion on all lines, hoses, and components. Each questionable area should be carefully checked with the detector probe, as well as all fittings, hose to line couplings, refrigerant controls, service ports with caps in place, brazed or welded areas, and areas around attachment points and hold-down on lines and components.
4. Always follow the refrigerant system around in a continuous path so that no areas of potential leaks are missed. If a leak is found, always continue to test the remainder of the system.
5. At each area checked, the probe should be moved around the location, at a rate no more than 25 to 50 mm/second (1-2 in/second), and no more than 5 mm (1/4 in) from the surface, completely around the position. Slower and closer movement of the probe greatly improves the likelihood of finding a leak.
6. An apparent leak shall be verified at least once by blowing shop air into the area of the suspected leak, if necessary and repeating the check of the area. In cases of very large leaks, blowing out the area with shop air often helps locate the exact position of the leak.
7. Leak testing of the evaporator core while in the air conditioning module shall be accomplished by turning the air conditioning blower on high for a period of 15 seconds minimum, shutting it off, then waiting for the refrigerant to accumulate in the case for ten minutes. Next, insert the leak detector probe into the blower resistor block or condensate drain hole if no water is present, or into the closest opening in the heating/ventilation/air conditioning case to the evaporator, such as the heater duct or a vent duct. If the detector alarms, a leak apparently has been found.
8. Following any service to the refrigerant system, and any other service which disturbs the refrigerant system, a leak test of the repair and of the service ports of the refrigerant system should be done.

OPERATING TIPS

ent E

- **Windy Conditions:** Do not attempt to find a leak in windy areas. Even very large leaks may be impossible to find as the escaping gas is quickly dissipated into the atmosphere. If necessary, fabricate a gas trap using aluminum foil around joints or fittings or otherwise shield the search area from the wind.

- **Recommended Sensitivity Setting:** CPS recommends beginning the leak test at level five or six. The best range of sensitivity is one that allows the variable output alarm and or visual indicators to operate within the given 10 LED segments without full saturation of the alarm. NOTE: The sensitivity range you have selected is too high when the highest audible tone is continually achieved or all ten visual LEDs are constantly lit. Select a lower sensitivity setting and try again.

- **Evaporator Filter Housing:** The presence of moisture in a leak test area will cause corona leak detectors to false alarm. When searching for leaks around evaporators or other areas where high moisture content is present, replace the standard aluminum housing with the patented Evaporator Filter Housing included in the accessory pack. This filter will eliminate false alarms caused by the presence of moisture.

- **Leak Verification:** If a suspected leak is indicated, verify several times by moving the sensor away from the leak area, allowing the alarm to clear and then back to the suspected leak. If the instrument indicates a leak three consecutive times, you have found a leak.

- **When to use Lock-Out:** Very large leaks or areas that have been leaking for a long time can actually form a cloud of refrigerant around the entire leak area. This cloud of refrigerant will tend to mask the actual leak source making it difficult to find. The LS790B and its LOCK-OUT mode of operation was designed specifically for this situation. Depress the LOCK-OUT key (three short beeps confirms that you are in LOCK-OUT mode) and start searching the leak area. As you search the leak area, the LS790B will automatically memorize the detected refrigerant concentration levels, systematically searching for the highest refrigerant concentration level. A distinct two-tone alarm will sound when the sensor is placed in the area of the highest refrigerant concentration detected. This will be your leak source.

NOTE: Do not be confused! It is possible to achieve this two-tone alarm in areas besides the actual leak source. This will occur as the LS790B locates a higher level of refrigerant concentration than it had previously stored in its memory. You will know when the unit has found the actual leak source when the two-tone alarm only sounds at one specific area.

The LS790B LEAK-SEEKER® is designed to require a minimal amount of field maintenance. Regular cleaning of the sensor housing air vents, replacement of the Ion-Pump® sensor and changing the batteries are the only maintenance needs.

- **Low Battery Condition:** If the center segment of the LED display (located directly above the * symbol) illuminates when the unit is switched on, the batteries are weak. Replace with "AA" alkaline batteries only.
NOTE: DO NOT use rechargeable batteries.

- **Changing the Ion-Pump® sensor:** Eventually, the Ion-Pump® sensor will need to be replaced. This condition is usually indicated by abnormal or erratic performance when the instrument is in the lowest sensitivity range. Install the new sensor as indicated in Figure 1 (turn the unit OFF before attempting to change the sensor). CPS recommends that you change the Ion-Pump® sensor at the beginning of every AC & R season and always have a spare sensor available for replacement in the field.

- **Cleaning the Standard Sensor Housing:** Ensure that the sensor housing inlet and outlet air vents are clean and free of materials that may block the air from circulating through the Ion-Pump sensor. If the vents become dirty and clogged remove the housing from the probe and remove the Ion-Pump® sensor (turn the unit OFF before removing the housing). Next, clean the housing using soap and water ONLY.
NOTE: Use of solvents or cleaners to clean the housing will leave a residue that may adversely affect the performance of your unit.

- **Patented Evaporator Filter:** Ensure that the sensor housing inlet and outlet air vents are clean and free of materials that may block the air from circulating through the Ion-Pump® sensor. If the vents become dirty and clogged remove the housing from the probe and remove the Ion-Pump® sensor (turn the unit OFF before removing the housing). Next, attempt to remove any contaminants using LOW-PRESSURE shop air or by hand ONLY. DO NOT attempt to clean this housing by any other means. If the sensor housing remains contaminated, simply replace it.

KEEP AIR VENTS OPEN AND CLEAN

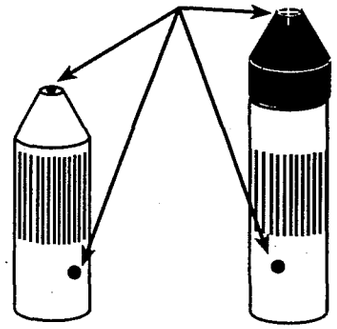

LSXSH STANDARD HOUSING FOR OPERATION IN ACCORDANCE WITH SAE J1628

LSXSF EVAPORATOR FILTER HOUSING ELIMINATES FALSE ALARM DUE TO THE PRESENCE OF MOISTURE

Figure 1

CPS guarantees that all instruments are free of manufacturing and material defects. If an instrument should fail during the guarantee period it will be repaired or replaced (at our option) at no charge. This guarantee does not apply to instruments that have been altered, misused, or returned solely in need of field service maintenance. All repaired instruments will carry an independent 90-day warranty. This repair policy does not include instruments that are determined to be beyond economical repair. An instrument being returned to CPS for repair must be accompanied by an original bill of sale and customer contact information.

CE

UL Listed 1N88
Refrigerant Leak Detection Equipment Design Certified By Underwriters Laboratories Inc.® to meet SAE J1627 for HFC-134a and CFC-12

MADE IN U.S.A.

cps®

World Headquarters
CPS Products, Inc.
1010 East 31st Street, Hialeah, Florida 33013
Tel: (305) 687-4121; Fax: (305) 687-3743
http://www.cpsproducts.com
e-mail: cpssales@cpsproducts.com

European Headquarters
CPS N.V. Elisabethlaan 216, 2600 Antwerpen, Belgium
Tel: (32-3) 281-30-40; Fax: (32-3) 281-65-83
e-mail: info@cpsproducts.be

73-761

PUMP-064, Attachment E
Page 1 of 100

cps®

REFRIGERANT LEAK DETECTOR
LS790B

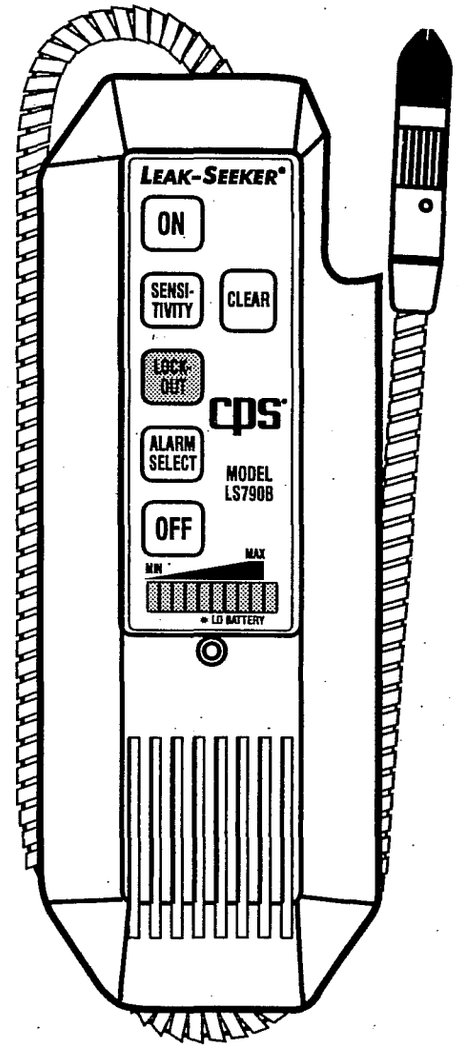

OWNER'S MANUAL

U.S. PATENT 4,609,875 AND 5,264,833
AND 5,371,467

TEST PROCEDURES

SERIES TYPE RECLOSERS

MINIMUM PICK-UP TEST

1. Connect output of test set to OCR under test. To save time, select an output tap which coincides with the desired test current used in the TIMING TEST (see SELECTION OF OUTPUT TERMINAL on page 5).

2. Turn input power to test set ON, allow 1 to 2 minutes for the digital instruments to warm up.

3. Depress LAMP TEST Pushbutton and observe that all indicators and instrument display segments are lit. Instrument displays should read 000.

   NOTE: It is not necessary to press the LAMP TEST Button after each test, only upon initial power-up operation. The digital displays are auto resetting and *do not* require resetting using the LAMP TEST Button.

4. Select the proper AMMETER RANGE which will allow measurement of 2 times coil rating of recloser under test. (Example: OCR with 35A coil should have 70A pickup, therefore select 200A range.)

5. Press MIN PICKUP Pushbutton and observe that MIN PICKUP and MAINT Test Mode Indicators are lit.

6. Press START Pushbutton and observe that TEST ON and OUTPUT ENERGIZED Indicators are lit.

7. Increase output control in a clockwise direction. The CURRENT Meter should begin to indicate current flow. Continue to increase output current while observing the MIN PICKUP Indicator Light. Increase output until MIN PICKUP Indicator flashes, then decrease output control to zero. Read and record minimum pickup current on CURRENT Display.

   NOTE: Rotating the output control too slowly will induce error into the detection of pickup by the microprocessor.

TIMING TEST

1. Determine test current to be applied to OCR under test. This is usually 4 to 6 times coil rating. (Example: 35A coil tested at 4 times would require 140 amps.)

2. Select proper ammeter range.

3. Use IMPEDANCE TAP SELECTOR Switch to adjust impedance network. (See Selection of Matching Impedance page 5.)

4. Press MANUAL Pushbutton and observe that MANUAL Test Mode and MOM Output Control Indicators are lit.

5. To set test current prior to running timing test, the output is momentarily initiated, the current is read on the ammeter and the output control is then readjusted.

   This is done by alternately increasing output control in clockwise direction and momentarily pressing START Pushbutton. The test set will initiate for 4 cycles, observe CURRENT Display. Repeat initiating output and increasing output control until proper current value is obtained.

6. Press OCR TIMING Pushbutton. If there are less than 4 operations to lockout, press and release LOCKOUT Pushbutton until the Operations Expected Indicator for the anticipated number of operations to lockout is lit (1, 2 or 3).

7. Be sure to allow the OCR time to completely reset before initiating timing test.

8. Press START Pushbutton. Current will flow in the OCR under test and it will begin its sequence of operations. The TEST ON and OUTPUT ENERGIZED Indicators will be lit. The Operations Recorded Indicators will indicate each operation. At the end of the test interval the test set will de-initiate and one of three Indicators will be lit.

   A. **LOCKOUT**

      This indicates the OCR under test has operated the number of times programmed in step 6. When the reclosure goes to lock out, after several (4-5) seconds, the test set will automatically de-initiate.

   B. **EXCESS SHOT**

      This light indicates that the OCR under test has operated more than the programmed number of operations.

   C. **EXCESS TIME**

      This light indicates that the OCR under test has not reached lockout in the prescribed length of time.

      NOTE: If an error statement is displayed, for example E01, see explanation under Error Statements on Page 6.

9. At the completion of the test the TEST ON and OUTPUT ENERGIZED Indications will be extinguished.

10. Depress the #1 OCR Operation Pushbutton. Read and record CURRENT, TRIP TIME, and RECLOSE TIME as given on the Displays. Pressing the #2 OCR Operation will give the values for the second operation. Repeat for each operation.

    NOTE: The final operation will give a TOTAL TIME value instead of a reclose time.

11. Return output control to zero and turn test set OFF.

TESTING VACUUM TYPE RECLOSERS

Most vacuum reclosers test the same as a series type oil circuit reclosers. The same test procedure may be used to test vacuum reclosers. It must be noted that the contacts used in vacuum reclosers tend to bounce, which can cause timing errors and may also be interpreted by the microprocessor as an excess shot. When testing vacuum reclosers, if an abnormally fast trip time is indicated, or the EXCESS SHOT Lamp illuminates, or if an error statement E53 is illuminated, this would indicate contact bounce has occurred. When this occurs, it may be desirable to retest the recloser. The microprocessor is programmed to ignore contact bounce which occur up to 8 milliseconds. If the problem persists, inspect the recloser for internal problem.

RECLOSERS REQUIRING LINE VOLTAGE FOR CLOSING

It is recommended that reclosers which require line voltage for closing be tested using one of the previous procedures and manually closed after each operation. This procedure will verify the time current operation and avoids the danger of having high voltage in the test area. The recloser must be manually closed within a few seconds after operation in order to establish a normal sequence of operation (prevent the recloser from resetting).

However, if testing with line voltage is required, connect the OCR-8015 to "A-O" of the recloser, and connect the high voltage source to "B" and "C" phases.

WARNING

Do not connect the high voltage source to the same phase as the OCR-8015 is connected.

Perform pick-up and timing tests the same as a series type recloser. To perform tests to B and C phases will require manually reclosing as previously discussed above.

SECTIONALIZERS

TRIP TEST

1. Connect output of test set to sectionalizer under test.

2. Turn test set ON, allow 1 to 2 minutes for the digital instruments to warm up.

3. Depress LAMP TEST Pushbutton and observe that all indicators and instrument display segments are lit. Instrument displays should read 000.

   NOTE: It is not necessary to press the LAMP TEST Button after each test, only upon initial power-up operation. The digital displays are auto resetting and *do not* require resetting using the LAMP TEST Button.

4. Select the proper AMMETER RANGE for the desired test current to be used. Switch the IMPEDANCE TAP SELECTOR Switch to position 15.

5. Press the MANUAL MODE Button and observe the MANUAL and MOM. Output Control Indicators are lit.

6. Press the MAINT. Pushbutton.

7. Press START Button and increase the output control clockwise until the desired test current is observed on the CURRENT Display. Press STOP Pushbutton.

8. Press SECT. TEST Pushbutton and observe SECT. TEST and #2 OPERATIONS EXPECTED Indicators are lit. If the sectionalizer to be tested is a three shot sectionalizer, press the LOCKOUT Pushbutton once so that the #3 OPERATIONS EXPECTED Lamp is lit. Allow 1 to 2 minutes for the sectionalizer to reset.

9. Press the START Pushbutton. The test set will initiate and test current will flow. The test set will alternately de-initiate and re-initiate the prescribed number of operations. If the sectionalizer operates properly, the LOCKOUT Lamp will light. If the sectionalizer operates too many shots or no operation, the test set will indicate EXCESS SHOT. If the sectionalizer does not operate enough shots and opens prematurely, the SECT. Light will flash.

10. Return Output Control to zero, turn test set OFF.

TESTING OF MOTOR OVERLOAD RELAYS

GENERAL INFORMATION

Always refer to the manufacturer's literature applicable to the particular overload relay before testing. The test operator should be familiar with the operating characteristics of the relay, the tolerances applicable to the operating characteristics and any means of adjusting the relay.

The test usually performed on these devices is to verify the time delay characteristics of the relay when subjected to an overload. One test point is usually suggested to establish whether the relay is operating correctly and within the band of the time-current curve for the relay. The suggested test current is three times (3x) the normal current rating of thermal overload relays or three times (3x) the pick-up current (setting) of magnetic overload relays.

It is, of course, easiest to make the connections and perform the tests on the relays if they are removed from the starter. However, it is not necessary to remove the relay as long as the power circuit is de-energized and the test leads can be connected to the device. The high current leads from the test set to the relay under test should be kept as short as possible and should be twisted to minimize loses caused by inductive reactance.

Run the test and note the time required for the overload relay to trip. If the tripping time exceeds the desired value, or if the relay does not trip at all, the relay may not be protecting the motor properly. If the relay operates too quickly, it may result in unnecessary nuisance trips. It should be remembered that these devices operate over a wide band and precise results should not be sought. A tolerance of $\pm$ 15% is usually acceptable.

If a thermal overload relay is not operating properly, tripping too soon or too late, remove the heater element. Note its type, rating, etc., and compare with manufacturer's data for operating characteristics of the motor. If correct for the application, substitute a new heater of the same rating and retest. If either under- or over-sized heater elements are being used, replace with the proper size heater and retest.

If a magnetic overload relay is not operating properly, refer to the relay manufacturer's literature for instructions on making adjustments of the timer delay. If the relay is operating improperly, it also may be desirable to verify the pick-up point (minimum operating point) of the relay. To perform this test, it is necessary to disengage the timer delay feature of the overload relay. Refer to the manufacturer's literature for detailed instructions.

TESTING OF TIME DELAY

1. Connect the test set to a suitable source of power. Be sure that the circuit breaker on the test set is OFF.

2. Make sure the motor circuit is de-energized.

3. Connect the output of the test set to the terminal of the heater of operating coil to be tested. (See SELECTION OF OUTPUT TERMINAL).

4. Connect a set of light leads from the binding posts marked EXT. CONTACT (located above output terminals) to the control circuit contacts of the relay being tested.

5. Turn test set's circuit breaker ON, allow 1 to 2 minutes for the digital instruments to warm up.

6. Depress LAMP TEST Pushbutton and observe that all Indicators and instrument Display Segments are lit. Instrument displays should read 000. It is not necessary to press the LAMP TEST Button after each test, only upon initial power-up. The digital meters are autoresetting.

7. Select proper AMMETER RANGE. Select timing Mode i.e. SECONDS or CYCLES. Switch the IMPEDANCE LOAD COMPENSATOR Switch to position 15.

8. Press MANUAL Pushbutton and observe that MANUAL Test Mode and MOM. Output Control Indicators are lit.

9. To set test current prior to running timing test, the output is momentarily initiated, the current is read on the ammeter and the output control is then readjusted. This is done by alternately increasing output control in clockwise direction (about 10% at a time) and momentarily pressing START Pushbutton. The test set will initiate for 4 cycles, observe CURRENT Display. Repeat initiating output and increasing output control until proper current value is obtained.

10. Wait several minutes to allow the overload relay to cool or the plunger to settle in the dash pot.

11. Press the MAINT. Output Control Pushbutton and the EXT. CONTACT STOP Test Mode Pushbutton. Indicators should be lit.

12. Initiate unit by pressing START Button. The timer will stop and the output will automatically de-energize when the overload relay operates.

    NOTE: Check the ammeter reading during the test for accuracy, minor adjustments may be made with the OUTPUT CONTROL while the test is in progress.

13. Record the results and compare them to the manufacturer's specifications.

14. Return output control to zero. Turn test set OFF.

TESTING OF MOLDED CASE AND LOW VOLTAGE POWER CIRCUIT BREAKERS

GENERAL INFORMATION

The OCR-8015 is capable of testing the time delay of molded case and low voltage power circuit breakers rated up to 800 amperes. It will provide up to 6,000 amperes for testing the short time delay or instantaneous trip elements of breakers rated up to 600 amperes.

Always refer to the manufacturer's literature applicable to the particular circuit breaker before testing. The test operator should be familiar with the operating characteristics of the circuit breaker, the tolerances applicable to the operation characteristics and any means for adjusting the circuit breakers.

Molded case breakers are usually tested for verification of the time delay characteristics and the minimum operating point (pick-up point) of the instantaneous element. Low voltage power breakers with solid-state or electro-mechanical trip devices are usually tested for verification of the time delay characteristics of the long time delay and short time delay elements and for the minimum operating point (pick-up point) of the instantaneous element. Each breaker pole should be tested independently so that all trip devices are tested.

One test point is usually sufficient to establish whether the long time delay or short time delay element is operating properly and within the band width of its time-current characteristics. For molded case breakers the suggested test current of the time delay element is three times (3x) the current rating of the breaker; for low voltage power circuit breakers, suggested test current is three times (3x) the pick-up setting of the long time delay element and one and one half times (1.5x) the short time delay setting where the type of trip characteristics is incorporated on the trip device.

On both molded case and low voltage power breakers, the instantaneous element is tested to verify the minimum current necessary to cause the breaker to consistently trip instantaneously.

When testing instantaneous trip elements, run the test to find the minimum current required to trip the breaker instantaneously and compare to the setting. Remember the instantaneous elements have an operating tolerance of from $\pm$ 10% to $\pm$ 25% of setting, depending on the particular trip device. On molded case circuit breakers, it is suggested that the time delay elements be tested before any instantaneous tests are performed.

Most modern low voltage power circuit breakers are of the "draw-out" type. These breakers should be tested using Multi-Amp Models CB equipped with the appropriate stabs to directly connect the breaker to the test set. However, these breakers can be tested with the OCR-8015 with the appropriate test leads clamped to the breaker terminals. When testing molded case breakers or any other breaker where leads are required to connect it to the test set, the leads should be as short as possible and twisted to minimize losses. See section on OUTPUT CONNECTIONS.

TESTING OF TIME DELAY

1. Connect the test set to a suitable source of power. Be sure that the circuit breaker on the test set is OFF.
2. Make sure the line side circuit of the breaker to be tested is de-energized or disconnected. Close the breaker to be tested.

3. Connect the test set output terminals to one pole of the breaker to be tested. (See SELECTION OF OUTPUT TERMINALS.)

4. A. If the timer and the test set are to be stopped using external contacts, connect a set of light leads from the EXT. CONTACT Binding Posts to another pole of the breaker under test or the desired auxiliary contact. Use the same test procedure for testing motor overload relays. Go to step 5, on page 13.

   B. If the timer and the test set are to be stopped by the tripping of the circuit breaker, continue to step 5 below.

5. Turn test set circuit breaker ON, allow 1 to 2 minutes for warm up.

6. Depress LAMP TEST Pushbutton and observe that all Indicators and instruments Display Segments are lit. Instrument display should read 000. It is not necessary to press the LAMP TEST Button after each test, only upon initial power-up. The digital meters are autoresetting.

7. Verify proper AMMETER RANGE. Select Timing Mode i.e. SECONDS or CYCLES. Switch the IMPEDANCE TAP SELECTOR Switch to position 15.

8. Press MANUAL Pushbutton and observe that MANUAL Test Mode and MOM Output Control Indicators are lit.

9. To set test current prior to running timing test, the output is momentarily initiated, the current is read on the ammeter and the output control is then readjusted. This is done by alternately increasing output control in clockwise direction (about 10% at a time) and momentarily pressing START Pushbutton. The test set will initiate for 4 cycles, observe CURRENT Display. Repeat initiating output and increasing output control until proper current value is obtained.

10. Press the MAINT. Output Control Pushbutton.

11. Initiate unit by pressing START Button. The timer will stop and output will automatically de-energize when the circuit breaker operates.

    NOTE: Monitor the ammeter reading during the test for accuracy; minor adjustments may be made with the output control while test is in progress.

12. Record the results and compare them to the manufacturer's specifications.

13. Return OUTPUT CONTROL to zero, turn test set OFF.

TESTING OF INSTANTANEOUS PICK-UP

1. Repeat steps 2 through 8 above, TESTING OF TIME DELAY.

2. Rotate OUTPUT CONTROL clockwise while alternately pressing the START Button until the circuit breaker under test trips instantaneously. Read ammeter for value of current required to trip breaker.

3. Record the results and compare them to the manufacturer's specifications.

4. Return OUTPUT CONTROL to zero, turn test set OFF.

MAINTENANCE OF PROTECTIVE DEVICES

MAINTENANCE OF MOTOR OVERLOAD RELAYS

APPLICATION

The prime function of the motor overload relay is to prevent operation of a motor for too long a period of time when an overload condition exists.

In general, motor starters are applicable to a given horsepower range of motors. The voltage and current requirements of the application will "size" the starter under NEMA requirements, but the actual starting current, running current, ambient temperature and severity of atmospheric conditions will determine the overload relay rating required to protect the motor without nuisance tripping.

Selection of the properly rated overload relay heater or coil can be made by reference to tables or charts supplied by the manufacturer of the overload relays. Whenever a motor trips out it is poor practice to indiscriminately install a larger heater or coil, since the motor may actually be working under an overload condition or the overload relay may be operating improperly. Installing a larger heater or coil could allow an overloaded motor to continue to run, resulting in deterioration of the motor insulation and reduction motor life. Therefore, careful analysis should be made as to the cause of the trip before changing the rating of the overload relay heater. Operating characteristics of the motor overload relay should be verified at regular intervals. The inspection and test interval can vary widely depending on the type of service involved, the importance of the motor to process or production, and environmental conditions.

TYPES

Motor overload relays incorporate an element which actuates a set of contacts connected to the motor control circuit. These contacts open the circuit of the holding coil in the meter starter and interrupt the power to the motor.

In general, there are three types of motor overload relays in use:

1. Thermal - melting allow or solder pot.
2. Thermal - bimetallic strip.
3. Electromagnetic

In thermal type relays, time-current characteristics are obtained by the thermal properties of the melting alloy or bimetallic strip. In the magnetic type, a damped plunger or moving iron device is used to produce time delays.

1. **Thermal - melting allow or solder pot**

   In this type, tripping is the result of heat generated by the motor overload current passing through a "heater" in the overload relay. This overload relay consists of a brass shaft which is surrounded by solder. Fixed to one end of the shaft is a small ratchet wheel. As long as the solder is solid, this assembly is immobile. When the motor control circuit contacts are closed, a spring in the motor overload relay is held compressed by the immobility of the ratchet wheel. An overload condition in the motor increases the current through the heater, thus melting the solder allowing the ratchet wheel to move, and releasing the energy in the spring. This interrupts the circuit of the holding coil in the motor starter and shuts down the motor.

   The starter may be reset only after the heater has cooled sufficiently to permit the solder to reset and again make the ratchet and shaft immobile. Reset is usually accomplished by an external pushbutton on the face of the starter. Many motor overload relays offer a selection of either manual or automatic reset.

2. **Thermal - Bimetallic strip**

   This type uses a bimetallic strip---two pieces of dissimilar metal bonded together. An increase in heat will cause movement of the bimetallic unit and eventually open a set of contacts in the motor control, thus opening the holding coil circuit and shutting down the motor.

   The principle of operation is the same as the melting alloy type. When the bimetallic element has cooled sufficiently, the motor control circuit may be reset either manually or automatically.

3. **Electromagnetic**

   In this type of motor overload relay, a damped plunger or moving iron device is used to produce the delays required and initiate the trip signal to the interrupting device. In the most common type of magnetic relay, movement of an armature or piston rod is delayed by a dashpot.

   When the electromagnetic field produced by the operating coil is strong enough, the piston in the dashpot moves through the oil to trigger the opening of the relay contacts, shutting down the motor. Usually, magnetic overload relays with oil dashpots have facilities which permit adjusting their minimum operating current (pick-up point) and their time delay characteristics.

PLANNED MAINTENANCE PROGRAM

A scheduled program for maintenance of motor overload relays consists primarily of "good housekeeping" in conjunction with visual inspections, tightening of electrical connections, and electrical testing. A brief outline is given on the next page:

1. **CLEAN**

   All types of motor overload relays should be cleaned periodically to ensure continued, reliable operation. It is possible for dirt or dust created by conditions in the plant to prevent parts of the relay from moving. Also, these same conditions can prevent the proper dissipation of normal heat, resulting in unnecessary operation of thermal type overload relays.

2. **TIGHTEN CONNECTIONS**

   This is particularly important in thermal overload relays. Loose electrical connections can cause extra heat which may result in a nuisance operation of the relay.

3. **INSPECT HEATER SIZE**

   Determine that the specified heater is used in thermal overload relays. Too often, oversized heaters are arbitrarily installed to eliminate unexplained trips. Actually, the original heaters may have oxidized over a period of time, becoming smaller in cross section. Then, the heat required to operate the relay is provided by a smaller amount of current than that intended by the original design. This may make the relay trip prematurely and the heater appear undersized.

4. **INSPECT SETTINGS (Where applicable)**

   Most magnetic overload relays have adjustable settings for minimum operating current and time delay characteristics. These should be adjusted to the specified settings.

5. **TEST**

   The motor overload relay should be subjected to a simulated overload and the tripping time measured. This time should be compared to the manufacturer's specifications of the relay's time-current curves to make certain that the relay is operating properly. A tolerance of $\pm$ 15% is usually acceptable. If the relay's curves or specifications are not available, it is suggested that the Heat Damage Curve of the motor be used as a guide for maximum trip time at 300% of motor full load current.

MAINTENANCE OF MOLDED CASE CIRCUIT BREAKERS

DESCRIPTION

The molded case circuit breaker essentially consists of two separate elements. One element is a set of contacts and suitable mechanical linkage for manual operation of the breaker as a switch in an electric circuit. The other element is a device to sense and react to an overload or short circuit. Normally, the time delay overload device is thermal and the instantaneous overload device, when supplied, is magnetic. Some newer styles include solid-state trip elements and operate very similar to low voltage power circuit breakers (see page 22 for description of characteristics).

The thermal element uses a bimetallic strip---two pieces of dissimilar material bonded together. An overload causes an increase in heat which will result in moving the bimetallic unit, releasing a latching spring which trips the circuit breaker.

A small percentage of molded case circuit breakers achieve their time delay through the use of an electromagnet, whose operation is opposed by a fluid filled dash pot.

The magnetic element operates with no intentional time delay to provide instantaneous protection against high magnitude faults.

In small molded case circuit breakers, the instantaneous element is not adjustable as it is factory set and sealed. In larger molded case breakers, the instantaneous pickup of the trip may be adjustable and is set with an adjustment screw. This type breaker may be shipped from the factory with the instantaneous element set at maximum if the setting is not specified by the purchaser; therefore, it is necessary to check these adjustable instantaneous settings before putting the breaker in service.

PLANNED MAINTENANCE PROGRAM

A scheduled program for maintenance of molded case circuit breakers consists primarily of "good housekeeping" in conjunction with visual inspections, tightening of connections and electrical testing. A brief outline is given below:

1. **CLEAN**

   All types of molded case circuit breakers should be externally cleaned periodically so that the heat produced in normally operation can be dissipated properly. It is possible for dirt of dust caused by normal plant conditions to accumulate and prevent proper dissipation of heat, resulting in a nuisance operation of the breaker.

2. **TIGHTEN CONNECTIONS**

   This is particularly important, because loose electrical connections will cause deterioration of the breaker terminals and an eventual phase to phase or phase to ground fault.

3. TEST

The molded case circuit breaker should be subjected to a simulated overload and the tripping time measured. This important because after a period of inactivity, the overload device may become stiff or inoperable. The only way to determine this condition and eliminate the stiffness is to electrically operate the breaker on a periodic basis. Manually opening and closing the main contacts of the breaker does not move any of the mechanical linkage associated with the overload device. Testing may be as often as every 6 months or as long as every 3 or 4 years, depending upon conditions where the breaker is installed.

MAINTENANCE OF LOW VOLTAGE POWER CIRCUIT BREAKERS

APPLICATION

The low voltage power circuit breaker has a wide application and may be used to protect circuits up to 600 volts ac or 250 volts dc. These devices are essentially two separate elements. One element is a set of contacts with suitable mechanical linkage for operating the breaker as a switch. The other element is a device to sense and react to an overload or short circuit condition. Low voltage power circuit breakers are manufactured with either electro-mechanical or solid-state trip devices.

SOLID-STATE TRIP ELEMENTS

This type of breaker uses a sample of the load current to supply a signal to an electronic sensing element. When an overload or short circuit condition exists, the solid-state sensing element sends a signal to a solenoid which releases the latching mechanism and trips the circuit breaker. This type eliminates the magnetic coil and dashpot mechanism of the electro-mechanical trip device.

ELECTRO-MECHANICAL TRIP ELEMENTS

Series tripped, direct acting low voltage power circuit breakers are tripped by the movement of an armature which strikes the trip bar of the breaker. The trip bar operates a latch which releases stored energy to rapidly open the breaker contacts. The armature of the trip unit is attracted to a pole piece through the magnetic field set up by current through a coil. The current through the coil is either the actual load current of the secondary output of a current transformer. For time delay the armature is restrained mechanically. Tripping time is a function of magnitude of current through the breaker.

Low Voltage Power Circuit Breakers are available with three types of tripping characteristics:

1. **LONG TIME DELAY**

   The long time delay characteristic provides overload protection with typical time delays of approximately 10 - 60 seconds at 300% of pickup.

2. **SHORT TIME DELAY**

   The short time delay characteristics provides protection for short circuit or fault conditions. It is used whenever a small delay is necessary for coordination or selectivity with other protective devices. Typical delays of this type characteristics are approximately 6 - 30 cycles.

3. **INSTANTANEOUS**

   The instantaneous trip characteristics is used for short circuit or fault protection and has no intentional time delay.

PLANNED MAINTENANCE PROGRAM

A scheduled program for maintenance of low voltage power circuit breakers consists primarily of "good housekeeping" in conjunction with visual inspection, tightening all connections and non-pivotal joints, and electrical testing.

1. CLEAN AND TIGHTEN

Low voltage power circuit breakers should be periodically cleaned, tightened and inspected. The manufacturer's instruction book for the breaker should be read thoroughly and his recommendations for lubricating and clearances should be followed closely.

2. TEST

The voltage power circuit breaker should be subjected to simulated overload conditions to verify that the breaker is operating within its specifications and tolerances. This is important because, after a period of time, vibration and environment conditions can render the breaker inoperable. Manually opening or closing the main contacts of the breaker does not "exercise" the overload trip device.

SERVICE DATA

SERVICING

The test set utilizes straightforward circuits and components which require little or no service except for routine cleaning, tightening of connections, etc. The test set should be serviced in a clean atmosphere away from energized electrical circuits. The following maintenance is recommended:

1. Open the unit every six months and examine for:

   a. dirt/dust
   b. moisture
   c. corrosion

2. Remove dirt/dust with dry, compressed air.

3. Remove moisture as much as possible by putting test set in a warm, dry environment.

4. As corrosion my take many forms, no specific recommendations can be made for its removal. However, it is suggested that the relay contacts be burnished using a diamond burnishing tool or an extra fine sand paper.

5. Check ribbon/cable connections for solid connections and printed circuit boards.

SERVICE AND REPAIR ORDER INSTRUCTIONS

If factory service is required or desired, contact the factory for return instructions.

A Service & Repair Order (SRO) number will be assigned for proper handling of the unit when it arrives at the factory. If desired, a letter with the number and instructions can be provided.

Provide the factory with model number, serial number, nature of the problem or service desired, return address, your name, and where you can be reached should the factory need to contact you.

A purchase order number, cost limit, billing, and return shipping instructions may also be provided if desired.

National Bureau of Standards traceable calibration and certification of two types is available, if desired, at additional cost.

Class One: A certificate is provided verifying the traceability and calibration of the equipment.

Class N: That which is required for nuclear power plants. A certificate of traceability and calibration along with "as found" and "as left" data are provided.

If an estimate is requested, provide the name and contact information of the person with approval/disapproval authority.

Pack the equipment appropriately to prevent damage during shipment. If a reusable crate or container is used, the unit will be returned in it if in suitable condition.

Put the SRO number on the address label of the shipping container for proper identification and faster handling.

NOTE: Ship the equipment *without* instruction manuals or nonessential items such as test leads, spare fuses, etc. These items are not needed to conduct repairs. *Do* ship the equipment with *all* interconnect cables, etc. which make the unit operational.

PREPARATION FOR RESHIPMENT

Save the shipping container that your unit came in. The shipping container your unit came in is designed to withstand the normal bumps and shocks of shipping via common commercial carrier. For example, you may wish to reship your unit to Multi-Amp for annual calibration certification.

WARRANTY STATEMENT

Multi-Amp Corporation warrants to the original purchaser that the product is free from defects in material and workmanship for a period of one (1) year from date of shipment. This warranty is limited and shall not apply to equipment which has damage, or cause of defect, due to accident, negligence, unauthorized modifications, improper operation, faulty installation by purchaser, or improper service or repair by any person, company or corporation not authorized by the Multi-Amp Corporation.

Multi-Amp Corporation will, at its' option, either repair or replace those parts and/or materials that it deems to be defective. Any costs incurred by the purchaser for the repair or replacement of such parts and/or materials shall be the sole responsibility of the original purchaser.

THE ABOVE WARRANTY IS IN LIEU OF ALL OTHER WARRANTIES, EITHER EXPRESSED OR IMPLIED ON THE PART OF THE MULTI-AMP CORPORATION, AND IN NO EVENT SHALL THE MULTI-AMP CORPORATION BE LIABLE FOR THE CONSEQUENTIAL DAMAGES DUE TO THE BREACH THEREOF.

PLACE BULLETIN 2-MG/OCR HERE

COMPUTER/PRINTER INTERFACE AND CONTROL

GENERAL DESCRIPTION

The unit is equipped with an RS-232 Interface for data retrieval by a remote computer. The unit includes remote control via the RS-232 Interface. When operating, the following data would be captured.

Minimum Trip Current: This test determines the minimum operating (pick-up) point.

Sequence of Operation: This test verifies the number and sequence of operations to lock-out.

Time Current Characteristics: This test determines the operating characteristics of the recloser under simulated fault conditions.

Operating Time: Digital timer measures the elapsed time of each operation.

Reclosing Time: Digital timer measures the reclosing interval between each operation.

Total Clearing Time: Digital timer measures the total elapsed time to lock-out.

INTERFACING CONSIDERATIONS

The 25 pin connector is located on the right-side panel of the control cabinet. Connect the User I/O port on your computer to this connector. Port 0 of the MF9 CPU is used for the RS-232 interface. For interfacing, see Section 2.6 SERIAL PORTS of the MF9 USER'S MANUAL. The characteristics of the port are:

1. 9600 Baud
2. 8 bit Character Length
3. 1 Stop Bit
4. No parity
5. Break Detect

The interface can run at slower speeds, however, it is recommended that the CPU board be returned to Dallas, Texas for reprogramming, (see return instructions on pp. 26-27).

NOTE: When the RS-232 Interface is not in use, the jumper end cap must be in place, or the control panel will "lock up".

The Printer Port is a standard Centronix Parallel Port. For interface to a printer, refer to your printer owner's manual.

COMMAND DATA FORMAT

The OCR-8015 with interface options may be controlled from a computer over the RS-232 port almost exactly as it is controlled by the front panel pushbuttons. The command codes listed on the next page, with a few exceptions marked "*", have the same effect that the corresponding pushbuttons would have and must be used in the correct sequence. The pushbuttons are explained in Section II, Description of Controls.

Each command is passed across the bus in a string of hexadecimal numbers. The command string must be prefixed with a start transmission code, followed by a command (which maybe followed by a data entry), and ended with an end of transmission code.

Each command string must have the following form:

Start Transmission Code (STX)
Command
Variable N (Data Entry in some cases)
End Transmission Code (ETX)

The Start Transmission Code (ASCII - STX) in keystrokes on a standard keyboard is **"Ctrl-b "** (hold Ctrl key while pressing b).

The Commands are as shown on the next page, in keystrokes. For example, to set the 200 Amp Range the appropriate command is **"01"**.

The End Transmission Code (ASCII - ETX) in keystrokes on a standard keyboard is **"Ctrl-c"** (hold Ctrl key while pressing c).

Example:

The following is an example of a string of commands, using a keyboard, for selecting the OCR TIMING Mode, selecting the 2KA Range and starting the test.

OPERATION	COMMAND STRING	
1. Select OCR TIMING Mode	**Ctrl-b**	(STX)
	12	(OCR TIMING)
	Ctrl-c	(ETX)
2. Select 2KA Range	**Ctrl-b**	(STX)
	02	(2KA Range)
	Ctrl-c	(ETX)
3. START Test	**Ctrl-b**	(STX)
	0Ctrl-n	(START Test)
	Ctrl-c	(ETX)

NOTE: When OCR TIMING Mode is selected, the test set automatically defaults to four operations to LOCKOUT and EXCESS TIME is strapped value (normally 20 seconds). If the recloser under test requires a longer limit to lockout, the EXCESS TIME limit can be programmed to a higher value. For example, to set an EXCESS TIME limit of 95 seconds, send the additional command prior to starting the test:

OPERATION COMMAND STRING

Set EXCESS TIME Limit to 95 seconds	**Ctrl-b**	(STX)
	140095	(Excess Time of 95 seconds)
	Ctrl-c	(ETX)

CMD	N	DESCRIPTION
00	-	Set 20 Amp Range
01	-	Set 200 Amp Range
02	-	Set 2K Amp Range
03	-	Set 20K Amp Range
04	-	Display data from shot 1 (on front panel only)
05	-	Display data from shot 2 (on front panel only)
06	-	Display data from shot 3 (on front panel only)
07	-	Display data from shot 4 (on front panel only)
08	-	MINimum PICKUP Mode
09	-	SECTionalizer Mode
0Ctrl-j	-	MANUAL Mode (must be selected before MOMentary or MAINTained Modes)
0Ctrl-k	-	EXTernal STOP enable
0Ctrl-l	-	LAMP TEST/soft reset - clears error code and zeroes displays (also see code 19).
***0Ctrl-m**	[**0***n*]	Set number of operations expected to lockout 1 to 4. Note that a 0 in the data string equals 1, and 3 equals 4 operations to lockout.
0Ctrl-n	-	Start command
0Ctrl-o	-	MOMentary Mode
10	-	MAINTain mode
11	-	Not used (reserved for future use)
12	-	OCR TIMING Mode
13	-	Not used (reserved for future use)
***14**	[**0***nnn*]	Set EXCESS TIME in seconds 1 to 199 seconds. If left 0, default is value strapped on p.c. board (normally 20 seconds).
15	-	Computer command to reset excess time, (CMPCTL $1).
16	-	Computer command to reset cycles, (CMPCTL $2).
***17**	-	Print/repeat - causes data to computer to be repeated and optional printer to print.
***18**	-	STOP
***19**	-	Reset; does a power on (hard) reset (also see code OC)
1Ctrl-k	[**0***nnn*]	Set variable cycles on for SECTionalizer TEST Mode (test current will be pulsed to sectionalizer in durations of 1 to 199 cycles). Default value is 4 cycles.

NOTE: A Ctrl corresponds to pressing the control (Ctrl) key and the corresponding letter after the "Ctrl" listing. For example **1Ctrl-k** corresponds to pressing "**1**" as the first entry and "**Ctrl-k**" (both at the same time) as the second entry.

AVTM835140
Rev. C
October 2003

Instruction Manual AVTM835140

for

Battery Ground Fault Locator
No. 835140 and 835140-1

High Voltage Equipment
Read the entire manual before operating.
Aparato de Alto Voltaje
Antes de operar este producto lea este manual enteramente.

Megger.

Valley Forge Corporate Center
2621 Van Buren Avenue
Norristown, PA 19403 U.S.A.
Tel.: 610-676-8500

www.megger.com

Instruction Manual AVTM835140

for

Battery Ground Fault Locator
No. 835140 and 835140-1

Copyright 2003 by Megger. All rights reserved.

The information presented in this manual is believed to be adequate for the intended use of the product. If the product or its individual instruments are used for purposes other than those specified herein, confirmation of their validity and suitability must be obtained from Megger. Specifications are subject to change without notice.

Megger

Valley Forge Corporate Center
2621 Van Buren Avenue
Norristown, PA 19403 U.S.A.
Tel.: 610-676-8500

www.megger.com

Megger.

TABLE OF CONTENTS

1 OPERATOR SAFETY 1
1.1 Description 1
1.2 Explanation Of Safety Symbols 1
1.3 Grounding 2
1.4 Power Cord And Fuses 2

2 GENERAL INFORMATION 3
2.1 Description 3
2.2 Features 3
2.3 Specifications 4
2.3.1 Test Signal Output 4
2.3.2 Withstand Capability 4
2.3.3 Loading 4
2.3.4 Warning Signal 4
2.3.5 Input Current Sensors 5
2.3.6 Accuracy And Sensitivity 5
2.3.7 Sensitivity 6
2.3.8 Ripple Tolerance 6
2.3.9 Meter Response Time 6
2.3.10 Current Sensor Output 6
2.3.11 Instrument Power Supply 7
2.3.12 Accessories 7
2.3.13 Physical 7
2.3.14 Operation 8
2.4 Changes 8
2.5 Warranty 8

3 INSTALLATION 11
3.1 Unpacking And Inspection 11
3.2 Preparation For Use 11
3.3 Line Supply Voltage 11
3.4 Repacking And Shipment 12

4 OPERATING INSTRUCTIONS 13
4.1 Panel Controls And Operating Functions 13
4.2 Principle Of Operation 16
4.3 Safety Considerations 16
4.3.1 Output Lead Set 16
4.3.2 Input Sensor 18
4.3.3 Recommended Operator Precautions 18
4.4 General Operating Procedure - Resistance & Capacitance 18
4.4.1.General Procedure 18
4.4.2 Led Measurement Status Indicators 19
4.4.3 Measurement Of Capacitance 20
4.5 Determining The Total Resistance Or Capacitance To Ground 22
4.6 Procedure For Locating Ground Faults 24
4.6.1 General 24
4.6.2 Steps To Locate A Ground Fault 24
4.7 Multiple Faults 28
4.7.1 General 28
4.8 Battery Systems With Capacitive Loading (Transient Suppression) 30
4.8.1 Descripton 30
4.8.2 Accuracy Vs Capacitive Loading 32
4.9 Battery Systems With Switching Loads 32
4.10 Power Frequency And Harmonic Ripple 33
4.11 Sensor Output 34

5 SERVICE AND MAINTENANCE 35

6 DOCUMENTATION 37

LIST OF FIGURES

Figure 4-1 – Panel Controls And Operating Functions 15
Figure 4-2 – Connection To A Battery System 17
Figure 4-3 - Connection To Main Breaker Panel 21
Figure 4-4 - Detecting The Total Resistance And Capacitance To Ground 23
Figure 4-5 - Locating Ground Faults 27
Figure 4-6 - Locating Multiple Ground Faults 29
Figure 4-7 - Battery System With Capacitive Loading 31
Figure 4-8 - Waveforms With Switching Annunciator Lamp Load 33

Megger.

Megger.

Megger.

1

OPERATOR SAFETY

ATTENTION

READ THIS MANUAL BEFORE PROCEEDING WITH INSTALLATION AND OPERATING THE INSTRUMENT.

Sur demande, les directives sur la sécurité de l'opérateur sont disponibles en français.

1.1 DESCRIPTION

This instrument must be operated, used and serviced ONLY by trained, qualified personnel. Misuse of electrical instruments can result in personal injury and damage to the apparatus under test. Obey all applicable safety rules and regulations at all times.

Refer to the following sections of this manual for operating specifications and procedures.

1.2 EXPLANATION OF SAFETY SYMBOLS

Megger uses, where applicable, the following IEC 417 symbols on its instruments:

This symbol indicates that the operator of the instrument must refer to the instruction manual for further explanation and clarification.

Safety Ground Terminal. This terminal must be connected to an earth ground before making other connections to the instrument and prior to operating it.

This *red* symbol indicates that high voltage (i.e. any voltage equal or greater than 1000 Volts) is present on the terminal. Use extreme care.

This is the symbol for a sinusoidal AC voltage or current.

1.3 GROUNDING

Where a ground binding post or a grounding lead is provided on the instrument, it must be connected to an earth ground PRIOR to making any other connections.

WARNING

To avoid electric shock do not interrupt the connection to the protective safety ground.

1.4 POWER CORD AND FUSES

The power cord must be connected to a grounded supply system with proper electrical ratings, as indicated on the instrument.

In the case of detachable power cords, only the cord supplied or specified by Megger should be used.

WARNING

TO AVOID ELECTRIC SHOCK ALWAYS DISCONNECT THE POWER CORD FROM THE SUPPLY CIRCUIT BEFORE SERVICING THE INSTRUMENT OR WHEN REPLACING A FUSE.

WARNING

ALL FUSES MUST BE REPLACED WITH THE SAME TYPE AND CURRENT AND VOLTAGE RATINGS. SHORT-CIRCUITING THE FUSEHOLDER IS PROHIBITED.

2

GENERAL INFORMATION

2.1 DESCRIPTION

The Megger Battery Ground Fault Locator is a portable instrument used for detecting, tracing and locating ground faults on battery systems. The instrument's operation is based on injecting a low frequency AC signal between the battery system and ground and then synchronously detecting the resulting current. The instrument is capable of tracing single or multiple ground faults on battery systems that are fully isolated, or resistance grounded. The tracing and locating procedure for finding a ground fault does not require a shutdown or sectionalization of the battery system.

2.2 FEATURES

- Lightweight and portable
- Reads directly in resistance or capacitance
- Wide operating range (1 ohm to 100 Kohms)
- Automatic operation; Easy to use
- Locates multiple faults
- Battery operated with built-in charger
- Protected against battery system transients
- Built-in memory for last reading comparison
- Operates with capacitive loading and reads capacitance

Megger.

2.3 SPECIFICATIONS

2.3.1 TEST SIGNAL OUTPUT

	60Hz Operation	50Hz Operation
Shape:	sinusoidal	sinusoidal
Frequency:	25Hz ±1Hz	21Hz ±1Hz
Maximum Output Voltage:	3.5VAC (open circuit)	3.5VAC (open circuit)
Maximum Output Current:	120mA (short circuit)	100mA (short circuit)
Output Impedance for 25Hz:	66 ohms, nominal	78 ohms, nominal
Equivalent D.C. Resistance:	10 Mohms	10 Mohms

2.3.2 WITHSTAND CAPABILITY

Output of the instrument will withstand continuous connection across a battery system of 250VDC nominal.

2.3.3 LOADING

The Battery Ground Fault Locator will draw a maximum of 250μA D.C. when connected to a 250VDC battery system. A battery system may be subject to pulse loading, while connecting the instrument to a battery system. This loading is caused by charging an internal decoupling capacitor through the ground fault resistance. For the worst case condition at 250VDC battery system and 0 ohms fault resistance, the pulse loading is 50A for 1.5mS.

2.3.4 WARNING SIGNAL

A *red* LED illuminates when the D.C. voltage across output terminals exceeds 30VDC.

2.3.5 INPUT CURRENT SENSORS

For safety reasons only one of the following sensors should be used with this instrument.

STANDARD CLAMP-ON CURRENT SENSOR (835142)

Maximum Physical Opening:	2.5 inches.
Dielectric Strength:	1 kV AC.
Maximum DC Bias:	25A.
Maximum AC Ripple Current:	0.5A.

MINI CLAMP-ON CURRENT SENSOR (OPTIONAL, 835146)

Maximum Physical Opening:	1 inch.
Dielectric Strength:	1 kV AC.
Maximum DC Bias:	5A.
Maximum AC Ripple Current:	0.5A.

BUS BAR CLAMP-ON CURRENT SENSOR (OPTIONAL, 835147)

Maximum Physical Opening:	2 x 4 inches.
Dielectric Strength:	1 kV.
Maximum DC Bias:	50A.

2.3.6 ACCURACY AND SENSITIVITY

ACCURACY USING CLAMP-ON C.T. (835142):

Range:	1 ohm - 100 Kohms
Basic Accuracy:	±20% of reading with a system capacitance less than 100µF - 1µF, respectively.

USING MINI CLAMP-ON (835146):

Range:	1 ohm - 10 Kohms
Basic Accuracy:	±30% of reading with a system capacitance less than 100µF - 1µF, respectively.

USING BUS BAR CLAMP-ON (835147)

Range:	1 ohm - 10 Kohms
Basic Accuracy:	±30% of reading with a system capacitance less than 100μF - 1μF, respectively

2.3.7 SENSITIVITY

The Battery Ground Fault Locator is capable of locating single or multiple faults, without subsequent troubleshooting, if output load impedance is higher than 66 ohms in 60Hz version (78 ohms for 835140-1). Below this value accuracy deteriorates. The capacitance to ground of the system affects sensitivity and accuracy.

2.3.8 RIPPLE TOLERANCE

The instrument is designed to reject up to 0.5 ampere of ripple current composed of the power frequency and its harmonics (up to about 500Hz). Saturation and therefore incorrect operation results above this value.

2.3.9 METER RESPONSE TIME

Three seconds nominal after "Valid" LED illuminates.

2.3.10 CURRENT SENSOR OUTPUT

Trans-Impedance:	1A = 10 volts (10 ohms)
Maximum Output:	14V pk-pk
Output Resistance:	2.0 KΩ

2.3.11 INSTRUMENT POWER SUPPLY

Internal, sealed, lead-acid rechargeable battery giving a minimum of 8 hours of continuous operation on full charge. Internally protected against charge exhaustion and overcharging by a temperature compensated charging circuit, 10 - 12 hour recharge time.

Instrument may be operated while recharging through standard CEE three-pin line socket with built-in fuse and spare.

Yellow LED illuminates when A.C. line power is applied to line socket.

Yellow LED illuminates when battery is 90% recharged.

2.3.12 ACCESSORIES

ACCESSORIES FURNISHED

MC1495	Line cord (SVT Type, 18 AWG, 3 conductor)
835141	Instruction Manual
835142	Clamp-on Current Sensor
835143	Output Lead, 2 meter
835144	Output Extension Lead, 4.5 meter
835145	Fault Simulator

ACCESSORIES AVAILABLE

835146	Mini Clamp-On Current Sensor, 1 inch opening
835147	Bus Bar Clamp-on Current Sensor

2.3.13 PHYSICAL

Instrument is supplied in a portable fiberglass case with lead storage compartment and removable cover.

Sizes: 330W x 280H x 180D millimeters
(13W x 11H x 7D inches)

Weight:

Instrument: 11.3 kg (25 LBS)
Shipping: 13 kg (29 LBS)

2.3.14 OPERATION

ENVIRONMENTAL:

Operating: 0°C to 50°C, R.H. to 80%
Storage: -40°C to +65°C

2.4 CHANGES

Please note that this instrument is subject to continuous development and improvement. This instrument may therefore incorporate minor changes in detail from the information contained herein.

2.5 WARRANTY

Megger warrants this equipment, sold by us or our authorized agents, to be free from defects in material and workmanship, reasonable wear and tear excluded, for a period of 12 months from date of shipment.

Warranty service will be performed on the equipment at the Megger factory (unless the return of only a subassembly is authorized by Megger) or, at Megger's discretion, in the field. The customer shall prepay shipping charges for units returned to Megger, and Megger shall pay for the return of the required or replaced unit to the customer, repair or replace (at Megger's option) the unit or subassembly provided that the Instrument has not been altered, modified or repaired by unauthorized personnel, and that our examination discloses to our satisfaction that any improper operation or failure was not the result of improper use, negligence or accident, exceeding environmental limits, or connecting the Instrument to incompatible equipment. The customer is asked to obtain return authorization from Megger PRIOR TO returning a unit for service.

This warranty covers the cost of repairing or replacing faulty components at Megger's option, but not the cost of travel and living expenses of service personnel for work completed in the field. Any field service trips will be subject to inspection of the Megger service representative. If it is determined upon arrival that the repair is not covered by the Warranty, the customer must be prepared to cover the standard rates of the Megger service representative(s) in addition to the cost of travel and living expenses of the service personnel.

The invoice for the full amount of the non-warranty repair will be submitted by the Megger office upon the return of the service representative. The customer must remit the required payment immediately for all service work performed.

NO OTHER WARRANTY IS EITHER EXPRESSED OR IMPLIED. MEGGER SHALL NOT BE LIABLE FOR CONSEQUENTIAL DAMAGES.

Products manufactured by Megger to customer's specifications are warranted to be free from defects in material and workmanship and to conform to those specifications made a part of Megger's quotation, or of a customer's Contract or Purchase Order. Inspection and acceptance shall be conclusive as to fulfilling this warranty, except as to fraud or such gross mistakes as to amount to fraud.

SINCE MEGGER HAS NO CONTROL OVER CONDITIONS OF USE, NO WARRANTY IS MADE OR IMPLIED AS TO SUITABILITY FOR CUSTOMER'S INTENDED USE BEYOND SUCH PERFORMANCE SPECIFICATIONS AS ARE MADE A PART OF MEGGER'S QUOTATION, OR OF A CUSTOMER'S CONTRACT OR PURCHASE ORDER WHICH HAS BEEN APPROVED AND ACKNOWLEDGED BY MEGGER.

Megger.

Megger.

3

INSTALLATION

3.1 UNPACKING AND INSPECTION

Prior to shipment this instrument was electrically tested and mechanically inspected and found to meet specifications and be free of mechanical defects.

After unpacking the instrument, visually inspect the instrument and accessories for damage. If evidence of damage is present, YOU must contact the carrier who transported the unit and file a claim in writing. The shipping container and packing material should be retained for inspection by the carrier's agent. Electrical operation per section 4 should be checked as soon as possible after shipment.

3.2 PREPARATION FOR USE

THIS INSTRUMENT IS DESIGNED TO BE USED IN SYSTEMS WITH POTENTIALLY LETHAL VOLTAGES AND CURRENTS. It is highly recommended that the user familiarize himself with the controls, functions and features detailed in section 3 prior to use. ALL SAFETY PROCEDURES AND PRECAUTIONS MUST BE FOLLOWED WHEN OPERATING ON LINE WITH LETHAL VOLTAGES OF HIGH CAPACITY.

3.3 LINE SUPPLY VOLTAGE

The instrument line voltage is clearly indicated on the front panel and **must** be checked before plugging the instrument in. The voltage should correspond to the voltage used in your country.

3.4 REPACKING AND SHIPMENT

To insure proper shipment of this instrument it is recommended that the original reusable container and packing material be retained. If being returned for calibration or service, please attach a card to the instrument specifying the owner, model and serial number and service required.

4

OPERATING INSTRUCTIONS

4.1 PANEL CONTROLS AND OPERATING FUNCTIONS

Refer to Figure 4-1.

1. Line Input Socket - Standard input for line cord. Fuse plus spare is located above socket.

2. AC Line - Illuminates when the input plug is connected to a live circuit.

3. Battery Charged - Illuminates when the battery is 90% recharged.

4. Power ON/Battery Check - Toggling this switch to the middle position activates the instrument (one of four measurement LEDs will illuminate). Flipping switch to upper position activates the battery check feature. Instrument meter should deflect to scale marking.

5. Function - This switch enables selection of the resistance or capacitance on meter display (13).

6. Memory - This switch normally rests in the middle position when present resistance reading is displayed. Toggling this switch to the upper position stores valid resistance or capacitance measurement in memory. Toggling this switch to the lower position recalls previously stored resistance value, to be displayed on the meter.

7. Warning > 30VDC - This LED illuminates when there is higher than 30VDC present across the instrument's output terminals. THIS WARNING LIGHT INFORMS OPERATOR OF A POTENTIALLY LETHAL VOLTAGE ACROSS INSTRUMENT OUTPUT TERMINALS. (May persist after disconnection).

8. Output - Jack for output lead set connection.

9. Input Overload - Illuminates when measured current signal exceeds input circuitry handling capability. This may occur when battery charging current ripple exceeds 0.5A, or AC current drawn by a load is present.

10. Overrange - Illuminates when measured resistance is higher than approximately 200K ohms.

11. In Progress - Illuminates when the meter reading is stabilizing. Indication may not be valid when this LED is illuminated.

12. Valid - Illuminates when the meter indication is within specified accuracy.

13. Ohmmeter/Capacitance/Battery Check Indication - This meter reads resistance, capacitance, or verifies battery condition, as required.

14. Input Sensor - Input connector for the clamp-on Current Sensor.

15. Sensor Output - This is a replica of the current being sensed by the Current Sensor, after it has passed through a 25Hz (21Hz for 835140-1) notch filter. It allows the operator to monitor battery system current ripple using an oscilloscope or recorder. It does not measure any of the D.C. component of the current, neither does the output contain any of the low frequency measured current.

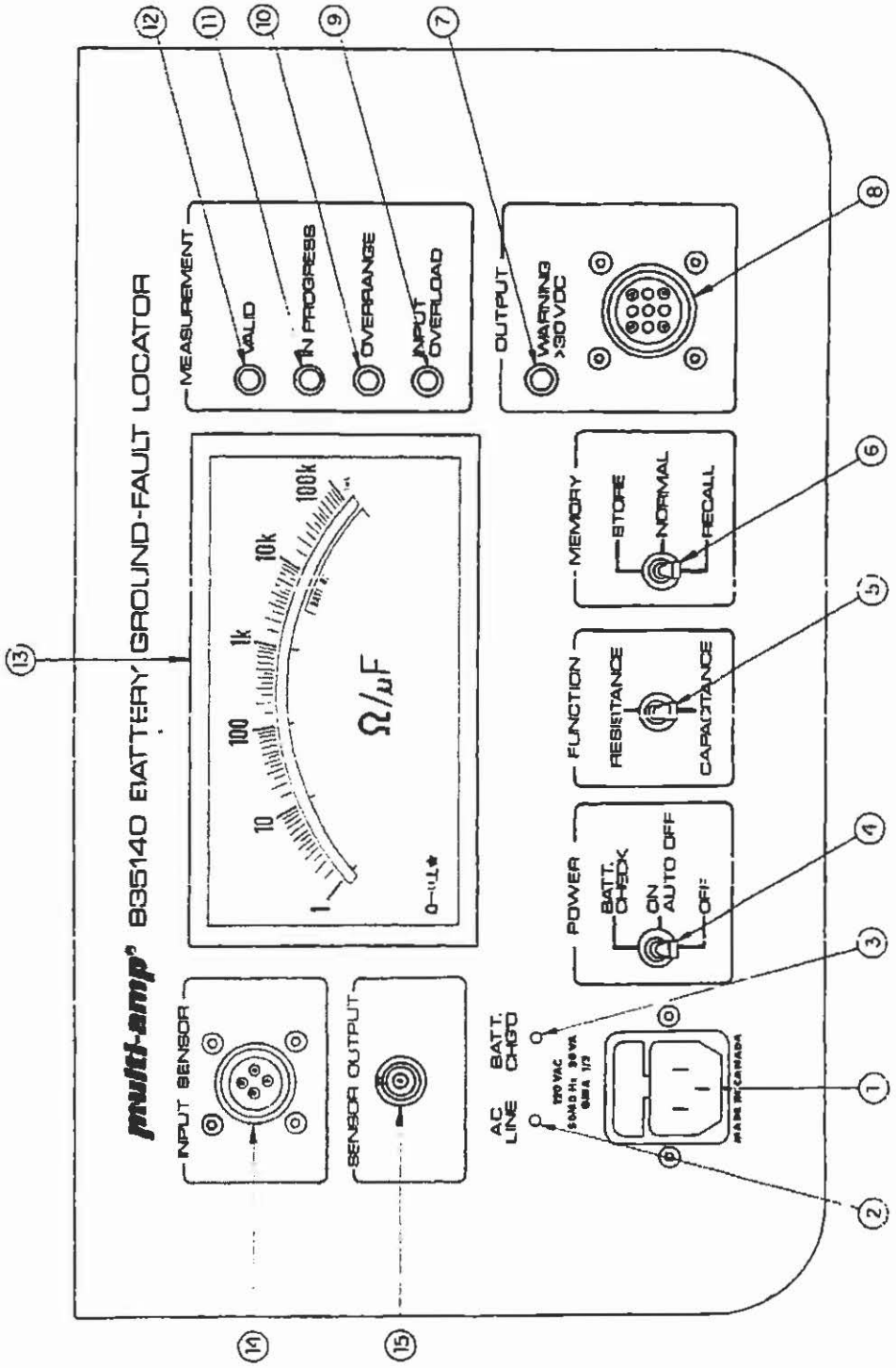

Figure 4-1: Panel Controls and Operating Functions

4.2 PRINCIPLE OF OPERATION

The Megger Battery Ground Fault Locator measures ground fault resistance in battery systems by:

1. Injecting an AC voltage between station ground and battery system.
2. Measuring the resulting circulating current with a clamp-on C.T. used as the current sensor.
3. Calculating resistance value by comparing the injected voltage to the in-phase component of the circulating current.

When the signal is injected at the battery terminal, and the clamp-on C.T. is connected to the outgoing lead, the instrument will measure the total ground faults and leakage resistance present on the battery system. If the C.T. is clamped on only one feeder, then the instrument will measure only the ground fault on that feeder.

The instrument has a built-in timer which helps to conserve battery life. It will turn off the instrument after approximately 5 minutes of measurement inactivity and will do so even if the instrument is powered off the line. Every time the valid LED is turned on the timer is reset. This means that whenever the C.T. is re-clamped to the system, operation is extended for a further 5 minutes. When the instrument is turned off by the internal timer it can be turned on again by toggling the power switch.

The clamp-on C.T. used as the current sensor for this instrument is made with an iron core. To avoid saturation of the core with DC current, the current must be less than 25 amperes. Core saturation may cause a false reading.

The BGL measures capacitance in much the same manner as is described above. The difference is in item 3 above, where the quadrature component of the current is used to calculate the capacitance.

4.3 SAFETY CONSIDERATIONS

4.3.1 OUTPUT LEAD SET

A three lead output set, complete with connector is provided for connecting to the battery system to be tested. Connect it to "Output" connector (8).

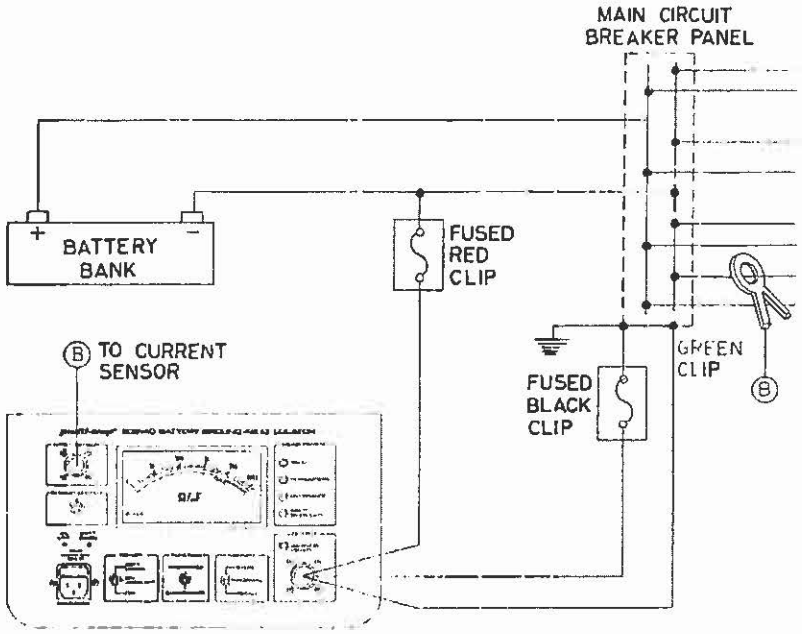

Figure 4-2: Connection to a Battery System

Connect to battery system as follows:

STEP 1. *Green* clip to system ground. This is the safety case ground.

STEP 2. Fused *black* clip to system ground.

NOTE: This is output signal return.

STEP 3. Fused *red* clip to negative or positive bus.

Disconnection from a battery system:

STEP 1. Remove fuse *red* clip from battery bus. DO NOT TOUCH bare end as voltage is still present via an internal coupling capacitor, charged to battery voltage.

STEP 2. Place *red* clip to ground so as to discharge internal coupling capacitor.

NOTE: Warning >30VDC *red* LED should turn off when discharge is complete.

STEP 3. Remove fused *black* clip.

STEP 4. Remove *green* clip.

4.3.2 INPUT SENSOR

Clamp-on current sensor is first connected to instrument. Iron core of sensor is electrically isolated from its output. Contact of iron core with live D.C. bus will not cause an electrical hazard.

4.3.3 RECOMMENDED OPERATOR PRECAUTIONS

Most Utilities have safety rules and procedures that must be observed when working on battery systems that may supply large amounts of current to a fault. All of these should be observed, suggested precautions should include:

1. The use of electrical safety gloves when in close proximity to bare battery bus work.
2. The use of safety glasses with optional tint (for H.V. arcing).

4.4 GENERAL OPERATING PROCEDURE - RESISTANCE & CAPACITANCE

Refer to Figures 4-2 and 4-3 for clarification of procedure.

4.4.1 GENERAL PROCEDURE

1. Turn instrument on. After initial "In progress" LED illumination, the "Overrange" LED should illuminate. If it does not illuminate, instrument battery is probably exhausted. Instrument should either be allowed to recharge or powered from an AC line.

   If power switch is in 'on' position when commencing, the unit may have the 'auto-off' enabled. To reset, simply place the switch to 'off ' and then back to the 'on' position.

2. Connect "Current Sensor" and "Output Lead Set" to the instrument.

3. Connect Output Lead Set to battery system in the following sequence:

   STEP 1. Connect *green* clip to station ground.

   STEP 2. Connect *black* clip to battery system ground.

STEP 3. Connect *red* clip to positive or negative battery bus bar.

"Warning > 30VDC" LED may turn on.

4. Clamp "Current Sensor" around *red* instrument output lead.

5. Place "Function" switch (5) to resistance position.

6. Wait for "Valid" LED to illuminate. Observe meter indication. Resistance displayed is equal the TOTAL parallel resistance to ground of the battery system from ALL leakage paths, including both positive and negative poles and any battery grounding resistor that may be used.

   NOTE: If this resistance is high (in excess of 10 Kohms) the chances of finding any problems is limited.

7. Remove clamp-on in step 4 and connect around one branch circuit lead.

8. Wait for "Valid" LED to illuminate. Observe meter indication. Meter indication is the resistance to ground of this branch forward.

   NOTE: Any resistance-to-ground between the red (output) lead and the location of the clamp-on C.T. will NOT be measured, as its current does not pass through the clamp-on sensor.

9. Repeat Step 7 until finding the faulted branch. If a low resistance-to-ground is found, use the instrument "Memory" feature. Toggle switch upward to store this value of leakage resistance. This will be useful later when further isolating problem. This resistance can be compared with other leakage resistances to determine whether ALL or part of leakage exists at any particular point.

10. When terminating measurements, first unclasp the "Current Sensor", then disconnect "Output Lead Set" in the following sequence.

    STEP 1. Disconnect *red* clip from battery bus bar and if "Warning > 30VDC" *red* LED illuminates, momentarily connect it to system ground to turn off this LED

    STEP 2. Disconnect *black* clip from battery ground.

    STEP 3. Disconnect *green* clip from station ground.

4.4.2 LED MEASUREMENT STATUS INDICATORS

1. "INPUT OVERLOAD" - This LED will illuminate if the magnitude of the sensed AC current signal exceeds 0.5A.

   Resolution: 1. Proceed to different branch or to point past battery chargers.

2. Turn off battery charger temporarily.
3. Since the return load current is typically also available, the overload condition can be eliminated by clamping around both conductors.

This LED will also illuminate if the magnitude of DC current exceeds 20A. The same cancellation effect applies to the AC ripple problem.

2. "OVERRANGE" - This LED will illuminate if resistance to ground exceeds 200K ohms. Branch is free from ground fault if this LED illuminates.

   Resolution: Proceed to different branch

   Since the return load current is typically also available, the overload condition can be eliminated by clamping around both conductors.

3. "IN PROGRESS" - This LED stays on for the period of time it takes the instrument to determine a reading (typically 3 - 7 seconds). If this LED continually stays on, or is erratic, problem may be a changing fault resistance or changing levels of DC current on the branch (caused by breaker, relay, or lamp activity).

4. "VALID" - This LED indicates a correct reading. Depending on circuit conditions, it may be necessary to wait a second or two for the meter to stabilize, before taking the meter reading.

4.4.3 MEASUREMENT OF CAPACITANCE

Capacitance measurements are done in exactly the same manner as outlined in steps 1-10 with the exception of step 5; where the switch is set to 'capacitance'.

Step 6 will give the operator total capacitance to ground for the battery system. This should be measured prior to doing resistance measurements to ensure all readings will be totally valid. A very high capacitance (>100μF) will affect accuracy of resistance readings. (See section 4.8)

NOTE: It should be pointed out that the polarity of the clamp-on C.T. does NOT affect resistance or capacitance readings.

By following the wiring, and making consecutive measurements, one can determine the location of the ground fault being traced. Although simultaneous (multiple) ground faults can be easily traced, high resistance grounds are difficult to trace in the presence of low resistance grounds. One should always trace, locate, and correct the low resistance faults first.

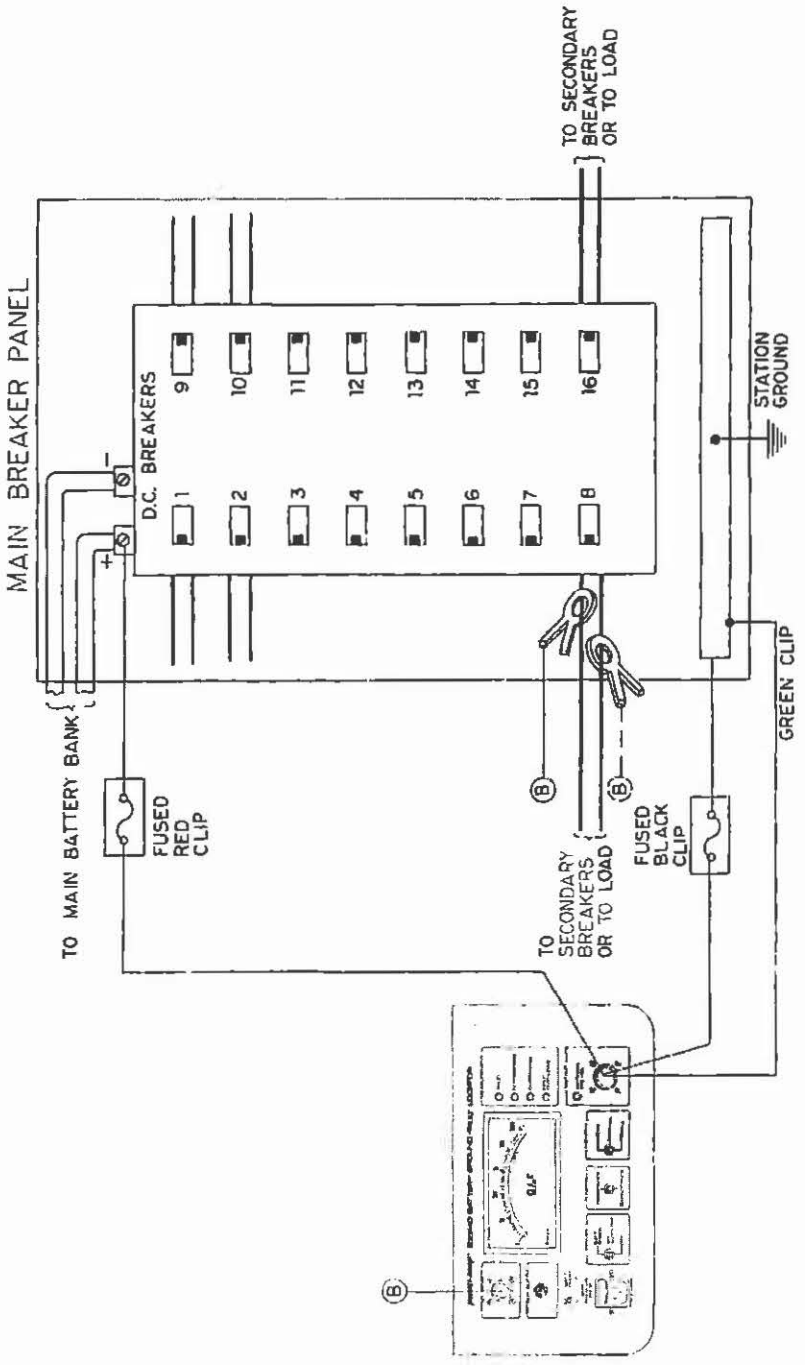

Figure 4-3: Connection to Main Breaker Panel

4.5 DETERMINING THE TOTAL RESISTANCE OR CAPACITANCE TO GROUND

Refer to Figure 4-4 for further clarification of procedure.

Most battery systems are equipped with detectors that will indicate the presence of a ground fault. If this indication is not available or if an operator wants to verify its proper operation, the following procedure should be used.

Refer to section 4.3. Safety Considerations, before proceeding.

1. Connect *green* fused clip to station ground.
2. Connect *black* fused clip to station ground.
3. Connect *red* fused clip directly to battery post (positive or negative).
4. Clamp C.T. on the *red* fused lead wire.
5. Wait for "Valid" LED to come on and meter to settle.
6. Meter will indicate total ground resistance between battery system and ground, including grounding resistance.
7. Clamp C.T. on positive bus leaving battery. Meter will indicate only the ground resistance on the positive pole of the battery.
8. Clamp C.T. on negative bus leaving battery. Meter will indicate only the ground resistance on the negative pole of the battery.
9. By switching to the "capacitance" function in steps 6, 7 and 8 the associated capacitances can be measured.

NOTE: *A small spark may occur when connecting to battery terminals. The initial placement of fused red clip on battery terminal (step 3) may cause ground detectors to momentarily alarm due to large inrush of current to the Battery Ground Fault Locator.*

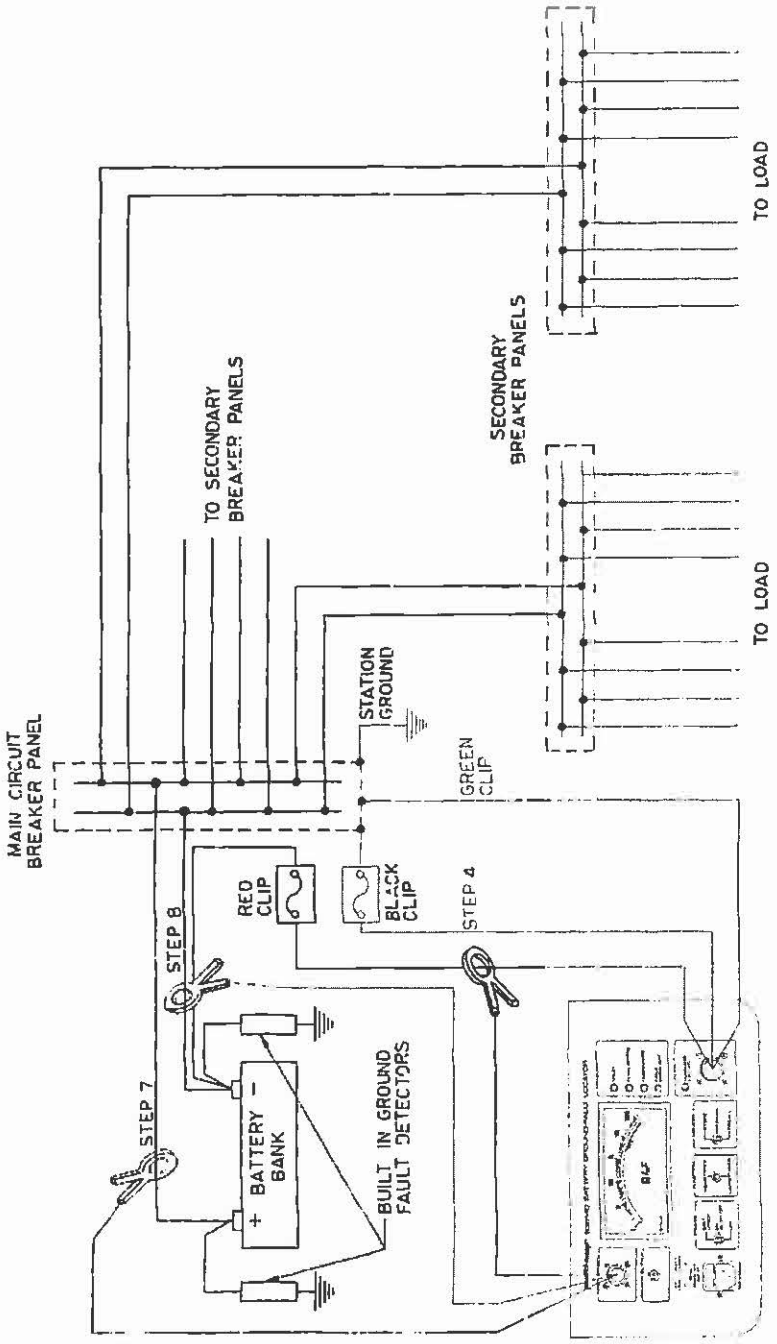

Figure 4-4: Detecting the Total Resistance and Capacitance to Ground

4.6 PROCEDURE FOR LOCATING GROUND FAULTS

Refer to Figure 4-5 for further clarification of procedure.

4.6.1 GENERAL

When attempting to find the location of a ground fault (or multiple faults), it is important to conduct the tests in a progressive and orderly manner. This means starting at a point closest to the battery (mains and mains breaker panel) and moving towards the individual loads.

The procedure used in Figure 4-5 outlines the steps required to locate a ground fault at its worst location. Following this procedure will typically take fewer steps to locate most faults.

When attempting to locate faults, some important items should be noted:

1. Once *red* fused clip is placed on a battery line it will inject an AC signal into both positive and negative sides of the battery system. This implies that this terminal, once connected to the system, need only to be removed when changing location. This has been used for the following procedure.

2. The procedure described is for the standard clamp-on C.T. If the mini-C.T. is used accuracy and maximum DC will change as per specifications.

4.6.2 STEPS TO LOCATE A GROUND FAULT

STEP 1 - CONNECTING INSTRUMENT

1. Connect *green* clip to station ground.

2. Connect *black* fused clip to station ground.

3. Connect *red* fused clip to NEGATIVE pole of the battery.

4. Clamp C.T. on *red* fused clip lead.

Indication on meter "3.33 Kohms", therefore, total resistance to ground is "3.33 Kohms". The 10kΩ grounding resistor must be in parallel to 5kΩ to get this value.

STEP 2

1. Clamp C.T. on positive battery lead.

   Indication on meter "> 100 Kohms", therefore, no serious fault on the positive side of battery system is present.

STEP 3

1. Clamp C.T. on negative battery lead.

   Indication on meter "5 Kohms", therefore, a total resistance of 5 Kohms to ground exists on the negative battery lead between the C.T. and all the connected loads.

   NOTE: *Grounding resistor 10kΩ is not seen by current sensor in this position, therefore the indication of 3.3 Kohms in step 1.4 increases to 5 Kohms.*

STEP 4 - MOVE TO MAIN CIRCUIT BREAKER PANEL

1. Place red fused clip lead on main circuit breaker panel, NEGATIVE pole.

   NOTE: It is preferred to inject the signal to the faulted pole of the battery. Hence the switch here from the NEGATIVE to the POSITIVE pole of the battery.

2. Clamp C.T. as per Figure 4-5.

Indication on meter "> 100 Kohms", therefore, no fault on this branch.

STEP 5

1. Clamp C.T. as per Figure 4-5.

   Indication on meter same as step 4. Conclusion identical.

STEP 6

1. Clamp C.T. as per Figure 4-5.

   Indication on meter same as step 4. Conclusion identical.

STEP 7

1. Clamp C.T. as per Figure 4-5.

   Indication on meter "5 Kohms", therefore, the total resistance found in step 3 is somewhere on this branch between this point and the connected load.

STEP 8 - MOVE TO SECONDARY BREAKER PANEL

1. Connect black fused clip and green clip to station ground.
2. Connect red fused clip to POSITIVE battery lead in secondary circuit breaker panel.
3. Clamp C.T. as per Figure 4-5.

   Indication on meter "> 100 Kohms", therefore, no fault on this branch.

STEP 9

1. Clamp C.T. as per Figure 4-5.

Indication on meter same as step 8. Conclusion identical.

STEP 10

1. Clamp C.T. as per Figure 4-5.

   Indication on meter same as step 8. Conclusion identical.

STEP 11

1. Clamp C.T. as per Figure 4-5.

   Indication on meter same as step 8. Conclusion identical.

   It can now be stated that the ground fault lies somewhere between the Main Circuit Breaker Panel (step 7) and the secondary breaker panel (steps 8-11). More steps can be added to further pinpoint the location, but this will be up to the user.

   Most battery systems have their own unique characteristics, by following this general outline, one should be able to develop his own plan on locating faults.

   It is almost essential to have a thorough knowledge of one's battery system and its diagrams are essential for efficient ground fault location.

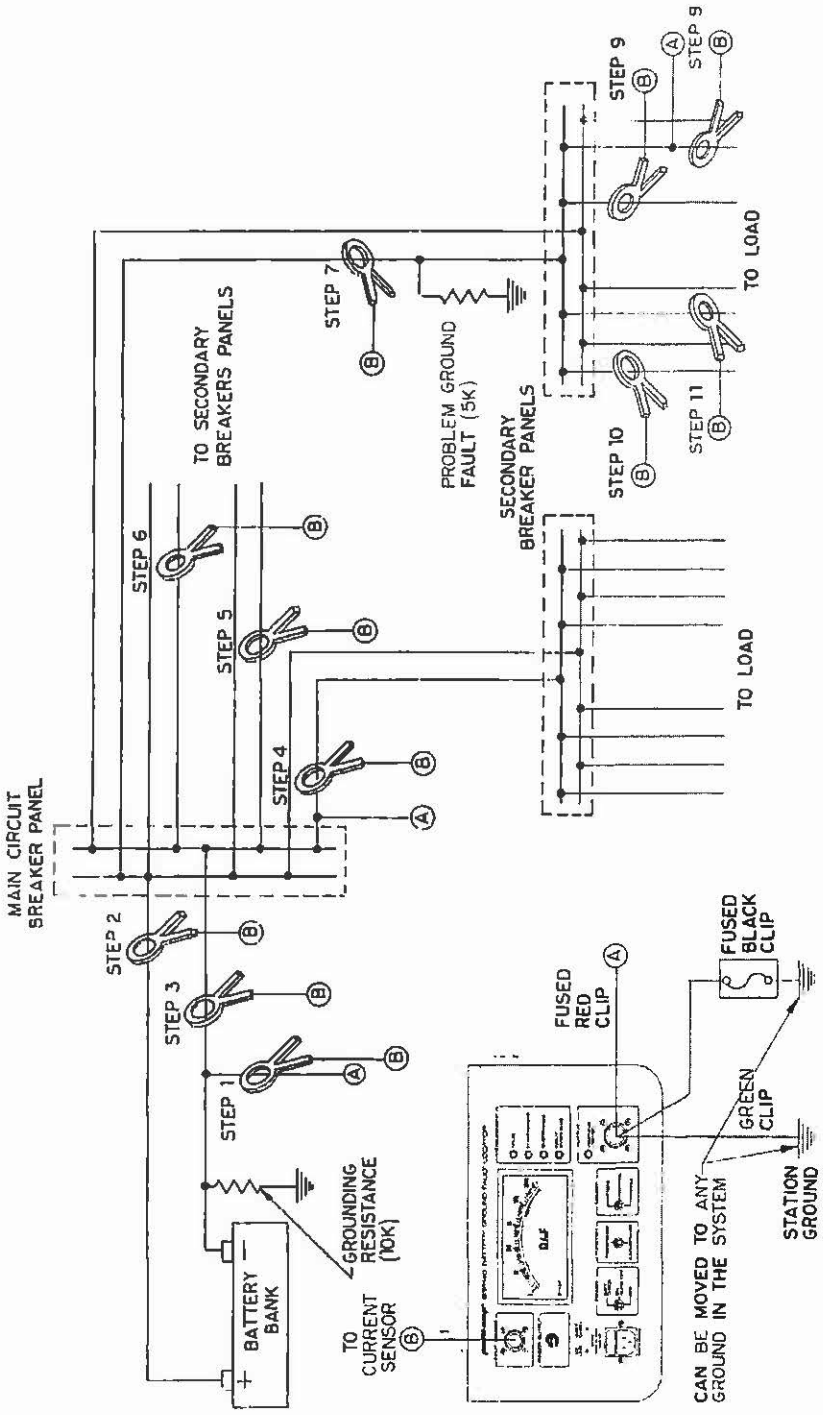

Figure 4-5: Locating Ground Faults

4.7 MULTIPLE FAULTS

Refer to Figure 4-6 for further explanation of procedure.

4.7.1 GENERAL

When dealing with older battery systems, it is very likely that more than one fault is present at any one time on the battery system. To locate multiple faults, it is important to note the exact values at each step and location. The resistance values are then compared to each other when all steps (1 to 11 in section 4.6) have been performed. This will allow the operator to determine if a fault is present between the test locations, or if the fault is closer to the load. If several feeders are faulted, they each will indicate the appropriate ground fault resistance, and these will combine to provide the equivalent parallel resistance, once they are connected together in a breaker panel.

As a general rule, when confronted with multiple faults, lower resistance faults must be eliminated first, before locating higher resistance faults.

EXAMPLE: STEP 1

1. Connect Battery Ground Fault Locator as per step 1 in section 4.6, *Procedure for Locating Ground Faults Leads* and C.T. as per Figure 4-6.
   Indication on meter "2.5 Kohms", therefore, total resistance after this point (including branches of secondary breaker panel) is 2.5 Kohms.

STEP 2

1. Connect *red* fused clip as per Figure 4-6, step 2.
2. Clamp C.T. as per Figure 4-6, step 2.
   Indication on meter "5 Kohms", therefore, the resistance between the secondary breaker panel and load is 5 Kohms. This indicates a 5kΩ resistance between step 2 and step 1. All other leads will indicate
   > 100 Kohms.
   One can calculate the resistance between step 1 and step 2 from:

$$\frac{1}{R1} = \frac{1}{R2} + \frac{1}{Rx}$$

where, R1 = Resistance measured in step 1.
R2 = Resistance measured in step 2.
Rx = Resistance between steps 1 and 2.

therefore,

$$\frac{1}{Rx} = \frac{1}{R1} - \frac{1}{R2} = \frac{1}{2.5k\Omega} - \frac{1}{5k\Omega}$$

and Rx = 5 Kohms
The resistance between secondary breaker panel and main breaker panel is therefore 5 Kohms.

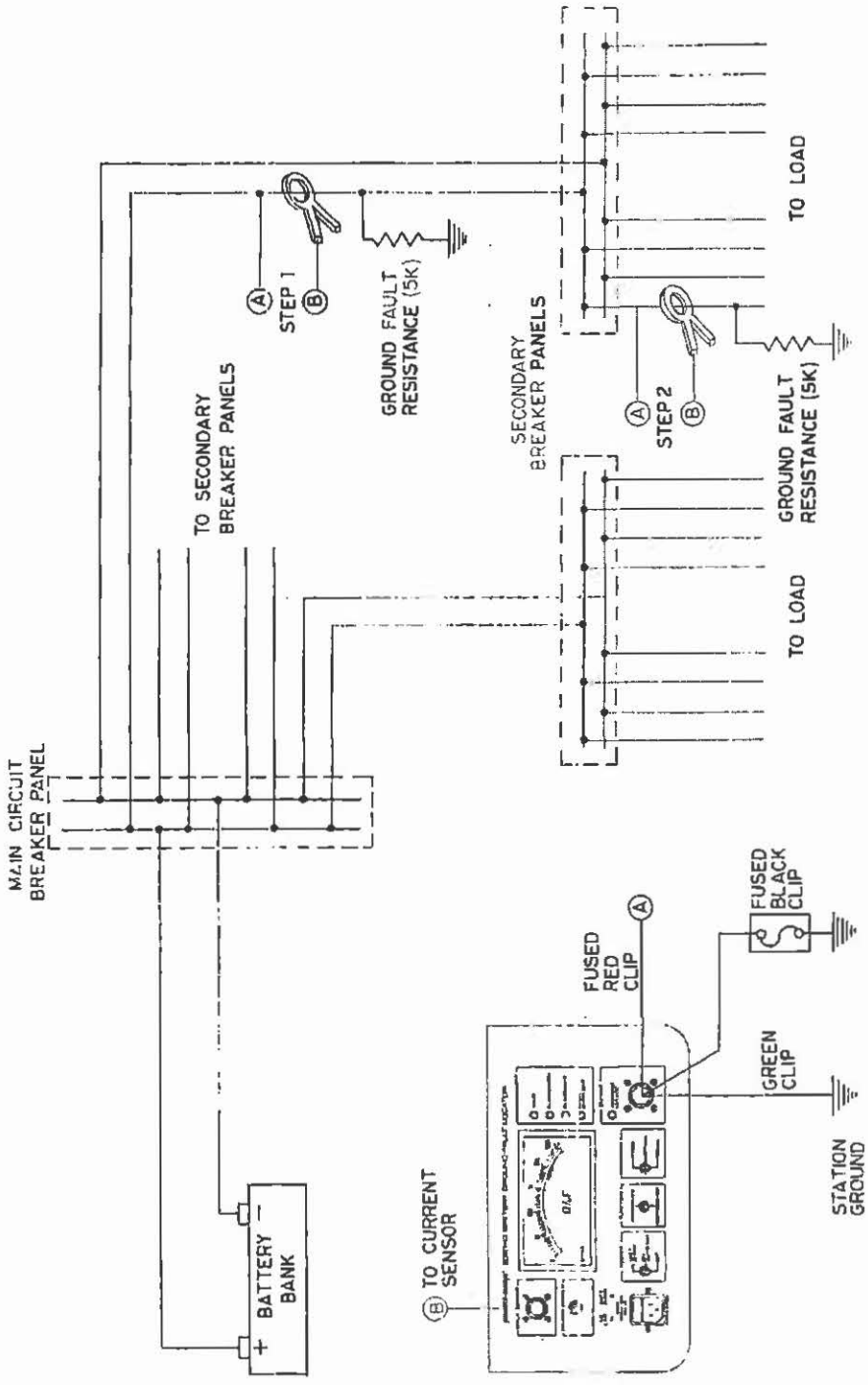

Figure 4-6: Locating Multiple Ground Faults

4.8 BATTERY SYSTEMS WITH CAPACITIVE LOADING (TRANSIENT SUPPRESSION)

Refer to Figure 4-7 for further clarification of procedure.

4.8.1 DESCRIPTON

Many loads connected to a battery system have a capacitor connected from each terminal to ground. Capacitors are placed on each load for transient protection. The value of capacitance on each load varies with the required degree of transient protection.

To measure the total or branch capacitance to ground, refer to section 4.4.3, *Measurement of Capacitance.*

When using a Battery Ground Fault Locator, the connected capacitance from the battery terminals to ground may affect the measured resistance values. The dissipation factor associated with the connected capacitor appears as a resistance to ground to the Battery Ground Fault Locator. The higher the loss in the capacitor, the lower the resistance to ground that is seen by the Battery Ground Fault Locator.

For most capacitors, dissipation factors are very low, so they appear as high resistance faults to ground. When conducting any ground fault location procedure, however, this possible source or error (or problem) should not be overlooked.

If the dielectric losses for a capacitor (or series of capacitors) are known, the effective "resistance to ground" can be calculated from the example below.

EXAMPLE: By definition:

$$DF = \frac{Xc}{R}; \quad \text{or} \quad R = \frac{Xc}{DF}$$

where, $Xc = \frac{1}{2\pi FC}$, F = frequency, C = capacitance, $\pi = 3.14$

therefore,
$$DF = \frac{1}{R \times 2 \times F \times C \times \pi}$$

or
$$R = \frac{1}{DF \times 2 \times \pi \times F \times C}$$

For a system where the capacitance to ground is 10µF and DF = 1% (0.01),

the equivalent ground fault resistance will be,

835140
$$R = \frac{1}{0.01 \times 10 \times 3.14 \times 25 \times 2 \times 10^{-6}} = 64\text{Kohms}$$

835140-1
$$R = \frac{1}{0.01 \times 10 \times 3.14 \times 21 \times 2 \times 10^{-6}} = 76\text{Kohms}$$

From the results of this calculation, it can be seen that on its own, 10µF capacitance having a DF of 1% (0.01) will register on the Battery Ground Fault Locator. This may not always be the situation, as the DF of capacitors used for this application should be higher than 1%.

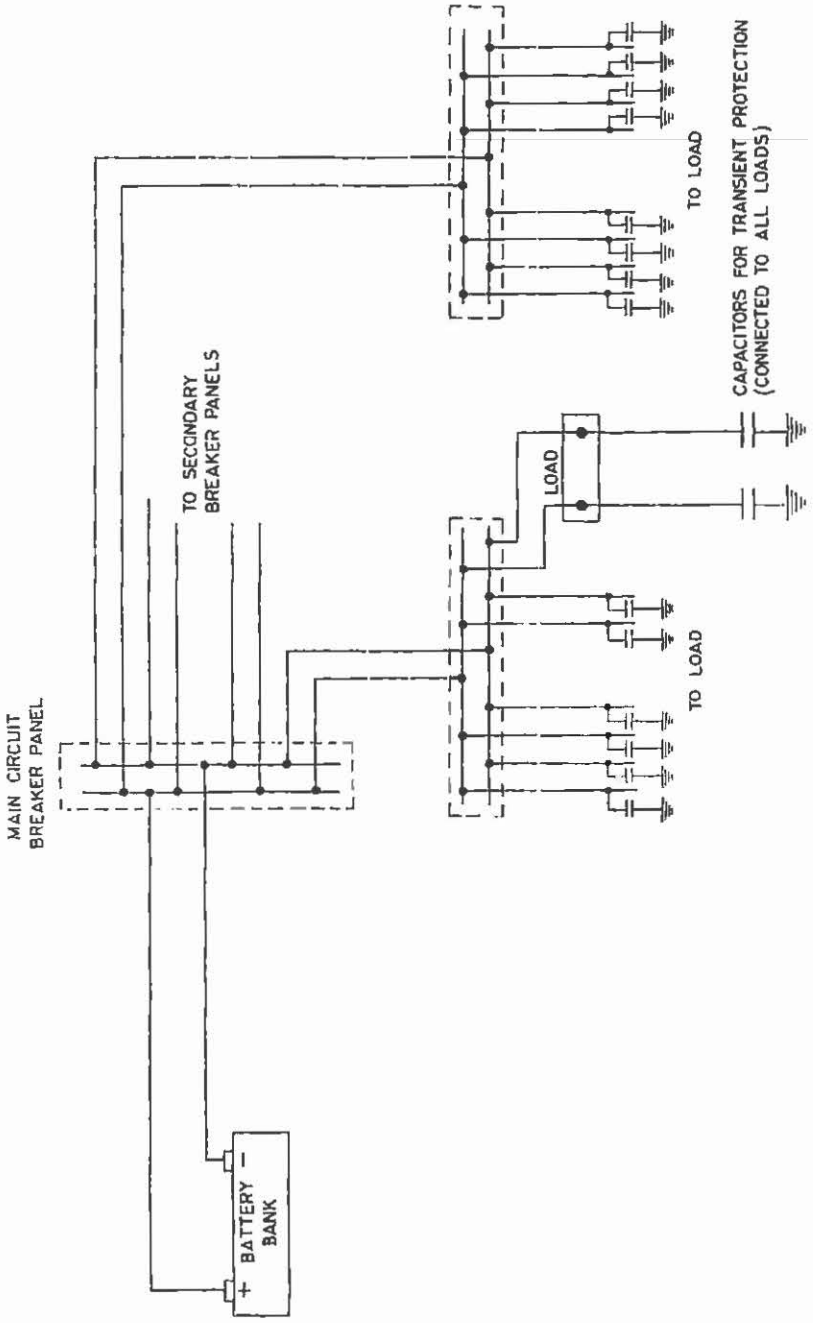

Figure 4-7: Battery System with Capacitive Loading

4.8.2 ACCURACY vs CAPACITIVE LOADING

The instrument's ability to resolve the resistive signal component deteriorates with an increase of capacitance in the measuring loop. This is mostly due to phase angle uncertainty in the instrument. Below is a table which can be used as a guideline when the operator wishes to determine the highest resistance value that can be measured with reasonable accuracy, in the presence of capacitance.

For ±20% Error Limits	
100KΩ	0 - 1μF
100K - 50KΩ	1 - 2μF
50K - 20KΩ	5 - 10μF
20K - 10KΩ	10 - 20μF
10K - 5KΩ	20 - 50μF
5K - 2KΩ	50 - 100μF
Lower than 1 KΩ	Larger than 100μF

Table 4-1

4.9 BATTERY SYSTEMS WITH SWITCHING LOADS

Equipment essential for the operation of an electrical power system, is usually powered by station batteries. Some of this equipment draws power from the battery system only momentarily. An example of such a load is shown in Figure 4-8. The annunciator lamp load shown is especially severe as the lamps draw a heavy in-rush current on "Turn on".

The current waveform in Figure 4-8, when broken down into its harmonics, is made up of 3Hz + 5Hz + 7Hz + 9Hz . . . + 25Hz, etc. When the BGL is tracing a leakage current it is sensing the 25Hz current component. The 25Hz component from momentary loads may interfere with the resistance measurement, depending on its magnitude.

The results of this interference will be a fluctuating meter on the BGL. The meter will swing back and forth in a cyclical manner. This erratic behavior will result in an inability to resolve resistive ground faults on this particular branch.

The BGL is protected against many annunciator and switching load problems by way of a special "sample & hold" circuit. This circuit however, may not work under all conditions, and the removal of an interfering load may be necessary for effective ground fault location.

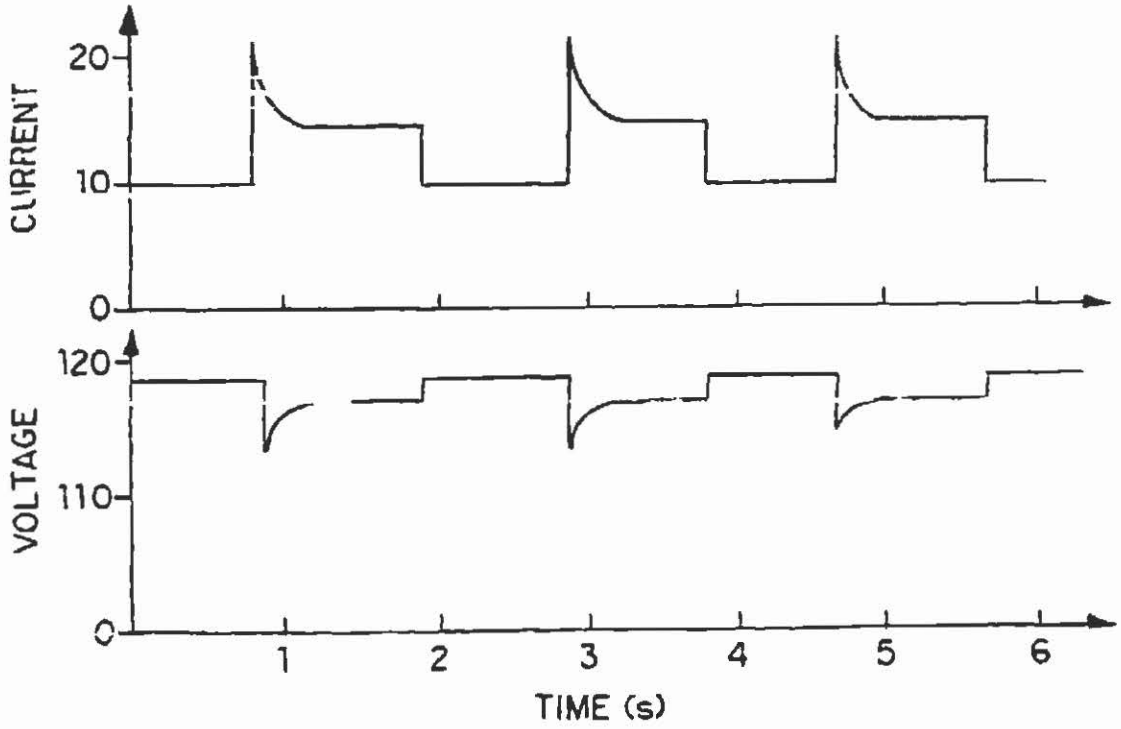

Figure 4-8: Waveforms with Switching Annunciator Lamp Load

4.10 POWER FREQUENCY AND HARMONIC RIPPLE

Power frequency and harmonic currents may be induced in the wiring of a battery system in a variety of ways. The primary source of such currents comes from unfiltered battery chargers.

There are a variety of SCR controlled battery chargers used by utilities which do not have an output current filter. When such battery chargers are combined with a system wide application standard of surge suppression capacitors, the harmonics permeate the entire battery system, and their magnitude may exceed the 0.5 amperes (rms) tolerated by the BGL.

It should be pointed out that the BGL is sensitive to the peak of the ac current, which should not exceed 0.7 amperes, approximately.

The "INPUT OVERLOAD" LED will illuminate when saturation is experienced, and readings cannot be considered as "VALID".

The turning off of offensive battery chargers, or other equipment, is necessary if one wishes to continue the tracing of battery ground faults.

4.11 SENSOR OUTPUT

When encountering "INPUT OVERLOAD" the trouble shooting problems can be greatly simplified by using the "Current Sensor Output" connected to an oscilloscope.

The "Sensor Output" provides a replica signal of the current sensed by the clamp-on sensor. Absent from this replica is DC, and the injected 25Hz (21Hz for 835140-1) current components. This output should be examined in all situations when "INPUT OVERLOAD" occurs, so that reasons for this condition can be determined and eliminated. When recorded, this output can be used by the utility engineers or Megger to find out why, and where, problems are originating from, and how to eliminate or avoid them.

In some cases, the amount of ripple observed will give the operator an immediate conclusion to the source of a problem. This is especially true if the ripple frequency matches the line and battery charger ripple.

5

SERVICE AND MAINTENANCE

The Megger Battery Ground Fault Locator incorporates complex circuitry. As the specialized test and trouble-shooting equipment is not readily available to the field user, a complete detailed circuit operating description would be of little use and has not been supplied.

Field service and calibration requirements should be referred to the nearest Megger sales office.

Megger.

Megger.

6

DOCUMENTATION

The following drawings are included at the end of this section for reference purposes only.

DRAWING NUMBER	TITLE
C35140-102	Schematic, Chassis
C35140-103	Block Diagram, Chassis
A35145-101	Schematic, Fault Simulator

Megger.

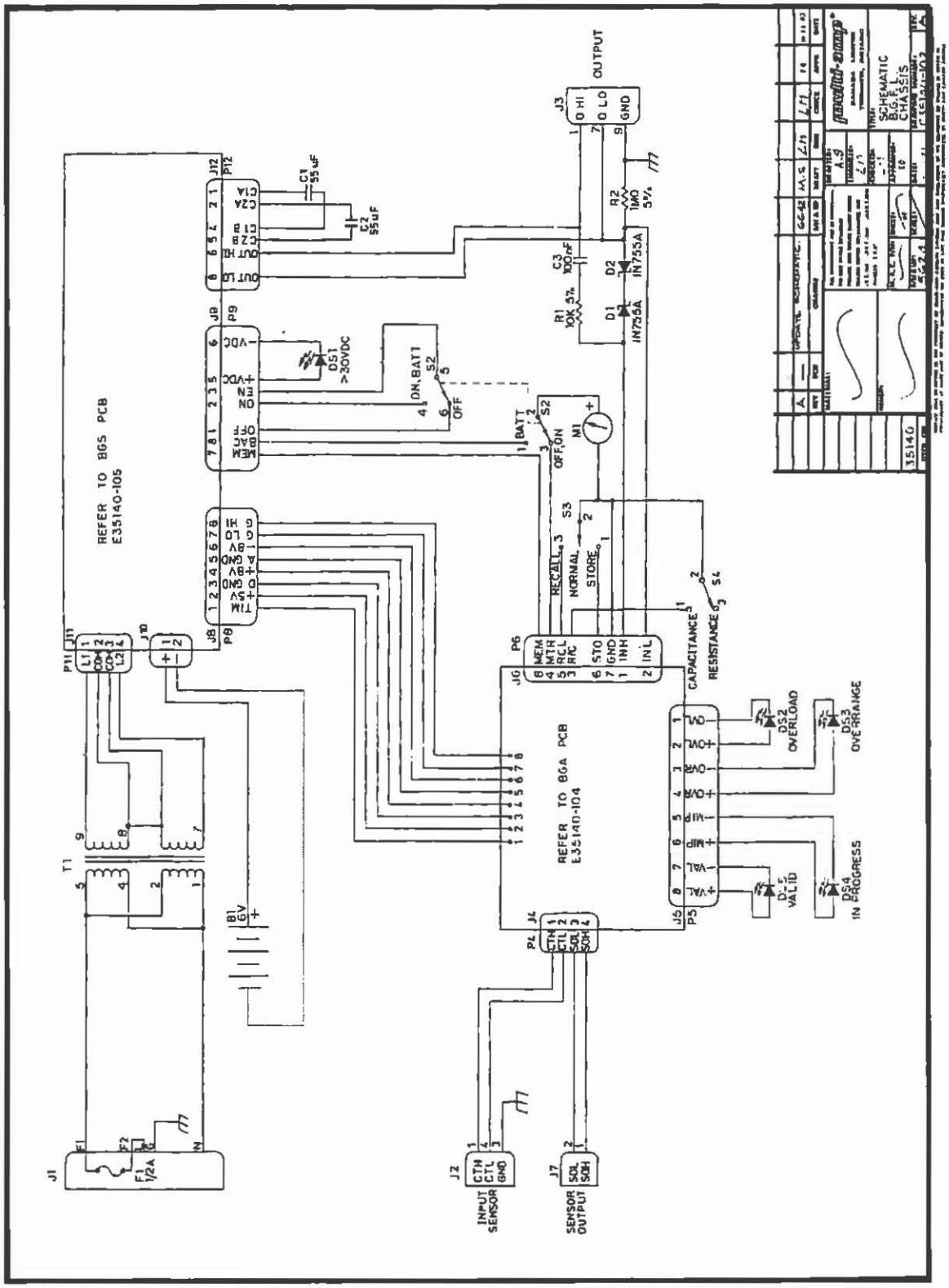
REFER TO BGS PCB
E35140-105
REFER TO BGA PCB
E35140-104
SCHEMATIC
BGA
CHASSIS
OUTPUT
INPUT
SENSOR
SENSOR
OUTPUT
CAPACITANCE
RESISTANCE
RECALL
NORMAL
STORE
OFF,ON
BATT
ON,BATT
OFF
DS1
>30VDC
DS2
OVERLOAD
DS3
OVERRANGE
DS4
IN PROGRESS
DS5
VALID
R1
10K 5%
R2
1MΩ
5%
C1
55uF
C2
55uF
C3
100nF
D1
IN755A
D2
IN755A
B1
6V
F1
1/2A
T1

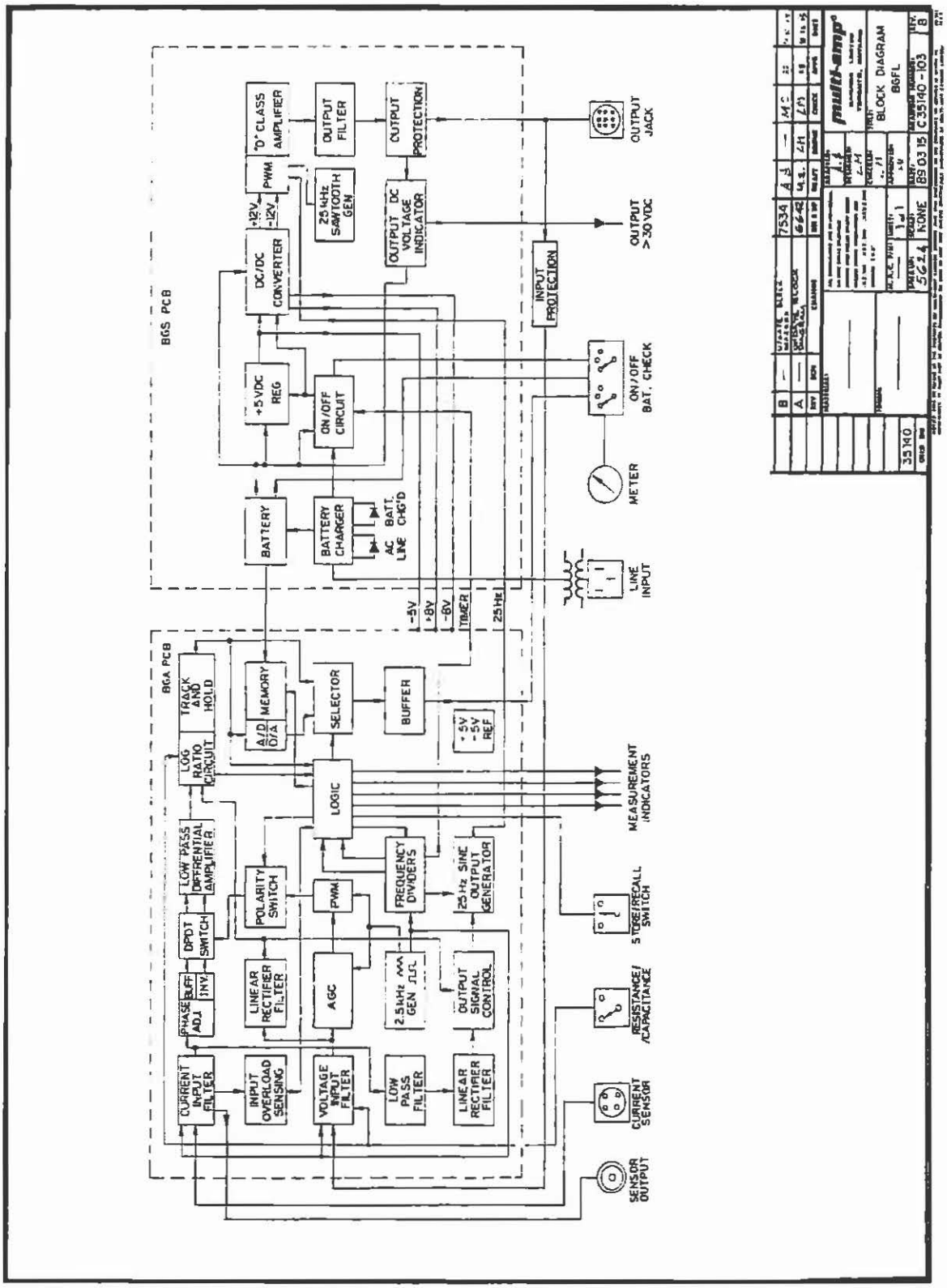
BGS PCB
BGA PCB
"D" CLASS AMPLIFIER
OUTPUT FILTER
OUTPUT PROTECTION
OUTPUT JACK
PWM
25 kHz SAWTOOTH GEN
OUTPUT DC VOLTAGE INDICATOR
OUTPUT >30 VDC
DC/DC CONVERTER
+12V
-12V
INPUT PROTECTION
+5 VDC REG
ON/OFF CIRCUIT
ON/OFF BAT. CHECK
METER
BATTERY
BATTERY CHARGER
AC LINE
BATT. CHG'D
LINE INPUT
-5V
+8V
-8V
TIMER
25 Hz
TRACK AND HOLD
MEMORY
A/D D/A
SELECTOR
BUFFER
+5V -5V REF
LOG RATIO CIRCUIT
LOGIC
MEASUREMENT INDICATORS
LOW PASS DIFFERENTIAL AMPLIFIER
POLARITY SWITCH
PWM
FREQUENCY DIVIDERS
25 Hz SINE OUTPUT GENERATOR
DPDT SWITCH
STORE/RECALL SWITCH
PHASE ADJ
BUFF INV.
LINEAR RECTIFIER FILTER
AGC
2.5 kHz GEN
OUTPUT SIGNAL CONTROL
RESISTANCE/CAPACITANCE
CURRENT INPUT FILTER
INPUT OVERLOAD SENSING
VOLTAGE INPUT FILTER
LOW PASS FILTER
LINEAR RECTIFIER FILTER
CURRENT SENSOR
SENSOR OUTPUT
multi-amp
BLOCK DIAGRAM
BGFL
35140
7534
NONE
89 03 15
C35140-103
8

Megger.

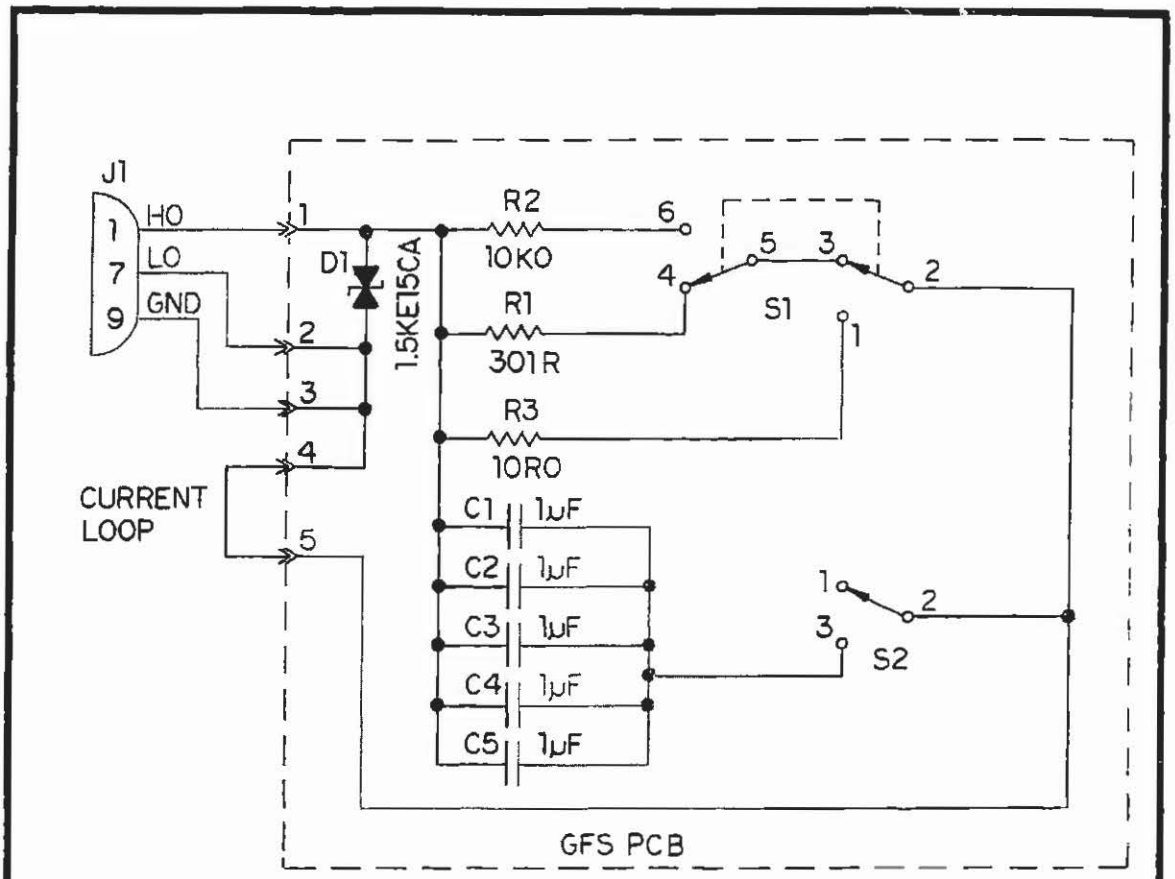

NOTES:
1. ALL RESISTORS ARE 1/2W, 1%
2. ALL CAPACITORS ARE 100V

REV	ECN	CHANGE	S/N & UP	DRAFT	ENG	CHECK	APPR	DATE

MATERIAL:	ALL DIMENSIONS ARE IN INCHES/mm. DO NOT SCALE DRAWING. DEBURR AND BREAK SHARP EDGES. UNLESS NOTED TOLERANCES ARE .X ± .100 .XX ± .030 .XXX ± .005 ANGLES ± 0.5°	DRAFTED: A.S	multi-amp® CANADA LIMITED TORONTO, ONTARIO
FINISH:		ENGINEER: LM	
	M. A. C. P/N: —	CHECKED: LM	TITLE: SCHEMATIC GROUND FAULT SIMULATOR
35145	SHEET: 1 of 1	APPROVED: KO	
USED ON	S/N & UP: 5803	SCALE: 5803	DATE: 89 11 01
			DRAWING NUMBER: A35145-101 REV.

NOTICE: THIS DRAWING IS THE PROPERTY OF MULTI-AMP CANADA LIMITED AND ANY DISCLOSURE OF ITS CONTENTS TO OTHERS IS GIVEN IN

- Customer-furnished source air pressure must not exceed 150 psig.
- Source air pressure can be furnished from air compressor, bottled air, or bottled nitrogen.
- Before testing fuse units, check for condensate in the water-filter bulb located inside the airflow test instrument. Remove any liquid by depressing the pin at the bottom of the water-filter bulb while source air pressure is connected.

1. Close the Main Valve located on the front of the airflow test instrument. Then, connect the external source-air supply line to the Male Speed Coupler at the rear of the instrument and reopen the Main Valve. Adjust the Source Regulator to obtain a source pressure gauge reading of 25 PSI.
2. Adjust the Airflow Adjustment Valve located on the front of the instrument to obtain an airflow of 90 SCFH (airflow is determined by reading the value on the flowmeter scale at the center of the float). Then close the Main Valve.

⚠ IMPORTANT

Do not alter the position of the Airflow Adjustment Valve after attaining an airflow of 90 SCFH.

3. Remove the release tube from the fuse unit to be tested. For SMD-2B and SMD-2C Fuse Units, use the appropriate black-hose coupler (two sizes provided) to connect the release-tube end of the fuse unit to the universal adapter. For SMD-1A Fuse Units, first attach the aluminum Test Adapter (included) to the SMD-1A Fuse Unit using the hardware provided; then use the smaller-diameter black-hose coupler to make the connection to the universal adapter. Be sure all hose clamps are tightened securely. Lay the fuse unit on its side and make certain there are no obstructions blocking the flow of air out of the breather cap at the lower end of the fuse unit.

   NOTES: SMD-2B Fuse Units rated 115 kv and 138 kv include a removable yellow vinyl seal at the exhaust end of the fuse unit. The vinyl seal should be temporarily removed before airflow testing, and then reinstalled upon completion of the testing.

   Superseded-design SMD-1A Fuse Units rated 34.5 kv through 138 kv and SMD-2B/-2C Fuse Units rated 34.5 kv through 69 kv manufactured before April 1971 (as indicated by the date stamp on the lower ferrule) include a brown bakelite or yellow vinyl seal at the exhaust end of the fuse unit. Remove the seal and replace with a current-production rain cap before commencing airflow testing.
4. Slowly open the Main Valve. Allow approximately 30 seconds for the flowmeter float to stabilize, then read and record the airflow value on the flowmeter scale.
5. Close the Main Valve and remove the fuse unit from the adapter.
6. Refer to the Recommended Minimum Airflow-Value Tables included with the S&C Airflow Test Instrument. Fuse units testing 10 (or fewer) SCFH below the applicable listed airflow value are operational, but should be periodically airflow tested—at least every five years—to ensure that airflow rates are stable within that range. If the flowmeter reading is more than 10 SCFH below the applicable listed airflow value, the fuse unit should be removed from stock

REFERENCE
FOUNDATIONS

Created by: M. Rideout
Revised by: B. Ropson
Reviewed by: G. Samms
Approved by: G. Samms

MSR007-1: Foundation Condition

The following descriptions are used for reporting equipment foundation condition:

Good - Free from cracks and spalls and does not require any repairs.

Fair - No large cracks or signs of serious spalling evident. Foundation is also quite level.

Bad - Foundation has settled to some degree and is no longer level and/or is badly spalled and cracked. Repairs should be made as soon as possible.

NEWFOUNDLAND POWER
A FORTIS COMPANY

Maintenance Standard Number: MSR008
Effective Date: 2009-07-17
Superseding Date: 1996-03-18

REFERENCE
GAS DETECTOR RELAYS

Created by: G. Mayo
Revised by: B. Ropson
Reviewed by: G. Samms
Approved by: G. Samms

MSR008-1: Gas Detector Relay Repair

Gas detector relays are relatively trouble-free devices if they are installed, handled and maintained correctly. This procedure is intended to assist maintenancemen in carrying out these actions.

The figure below shows a Model 11 GE gas detector relay. This relay and the Model 12 relay are the most common and provide the majority of the problems encountered. Please follow these steps to repair this relay.

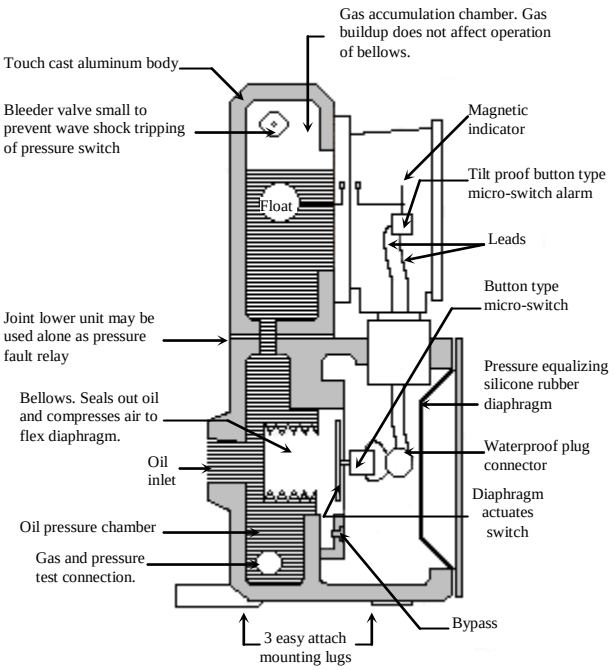

1. Read the manufacturer's maintenance and operations bulletins.
2. Ensure that trips and alarms are defeated. Remove the unit to be maintained from service. Install a shipping plus prior to shipment. Replace with a unit which has been recently maintained and calibrated. Reactivate trips and alarms.
3. Check calibration at Electrical Maintenance Center prior to commencing repairs.
4. Disassemble and clean thoroughly.
5. Check the diaphragm and bellows in the pressure chamber for deterioration. Replace as required.
6. Replace the micro-switches in the gas accumulator and oil pressure chambers. The replacement will be sealed with a silicone or rubberized spray. Take care not to interfere with the switching operating arm. Megger micro switches at 250V.
7. Replace the rubber bushing used for gap setting in the Model 11 with a stainless steel spring.
8. Replace the silicone rubber diaphragm.
9. Replace all seals and O-rings. Lubricate with the appropriate grease or oil.
10. Clean or replace the magnetic oil gauge as necessary.
11. Inspect the cable connector. Replace if required or clean and then lubricate threads and pins with a heavy consistence silicone lubricant such as Dow Corning 111 Compound.
12. Ensure that sensitivity orifices are free.

REFERENCE
GAS DETECTOR RELAYS

13. Clean the screens/orifice in the bleeder valve connector. This orifice is small to prevent wave shock tripping when draining oil or gas.

14. Set pressure chamber diaphragm to microswitch gap to 0.020 inches.

15. Set sensitivity adjustment in Model 11 to normal setting of 1/3 psi/second, as indicated by the punch mark on the bypass valve dial.

16. Install humidity absorbent packets, as required, inside the unit.

17. Reassemble the unit and do an operational check as per MST007.

18. Paint as required.

19. Attach a tag indicating that the unit has been maintained and is now ready for service. Indicate the date and name of the maintenance person on this tag.

20. Examine the plug, cabtire and connections in the field. Clean, lubricate or replace the connector as required. Connections to the permanent wiring in the conduit will be made with special sleeves incorporating compound and heat-shrink.

21. Waterproof the plug connection by spraying with a silicone or rubberizing spray when it has been reassembled. An alternative would be to tape the connection with Rotunda EPR Self-Amalgamating Tape or Paychem Gelteck Strip. Both types of seal require a mechanical protection such as a Scotch Super 88 Vinyl plastic electrical tape.

GIB-4899-A

INSTRUCTIONS

GAS DETECTOR RELAY
MODEL 11, MODEL 11BC, AND MODEL 12

INTRODUCTION

The gas detector relay is a protective device that gives an early indication of faults occurring in oil filled conservator type power transformers. These faults fall into two general classes:

(1) Faults of an incipient or minor nature resulting in a slow evolution of gas. This gas may be generated by local heating, defective insulating structures, improperly brazed joints, loose contacts, grounds, short circuit turns, burning of core steel, or from air in the transformer.

(2) Faults of a major nature that generates a sudden pressure wave. Major faults are usually caused by flashover between parts.

The relay will detect either of these classes of faults.

DESCRIPTION

An outline of the Gas Detector Relay is shown in **Figure 1**.

The relay consists of two sections:

A. A Gas Accumulation Chamber at the top. It consists of:

1. An oil chamber with a gas escape bleeder needle valve having a flame protective screen mounted in a protective recess at the top of the casting. (The Model 12 does not have a flame protective screen)
2. A 75mm magnetic oil gauge with a microswitch.
3. An opening in the bottom of the casing to allow gas to enter from the pressure chamber below.

B. The Pressure Chamber at the bottom. It consists of:

1. An oil chamber at the rear connected to the transformer by a 3/4" pipe in the back of the casing.

NOTE:

A tubular fibre shipping plug is installed to prevent damage to the bellows during handling and transportation. It is to be removed immediately prior to installation but must be reinstalled if the relay is to be moved separately or on the transformer.

2. A test check valve located at the base of the oil chamber.
3. A sensitive brass bellows that separates the oil chamber from, but is part of the pressure operating mechanism.
4. A stop to prevent overtravel of the bellows.
5. A flexible diaphragm.
6. A microswitch.
7. The Model 11 and 11BC Gas Detector Relays have a small leaf spring valve fastened to the diaphragm support. This by-pass valve controls the rate of flow of the air escaping from the bellows side to the front of the diaphragm. The normal setting is indicated by a punch mark on the dial. This gives a rate of pressure rise of approximately 3.5 kPa/0.5 PSI, the amount required to actuate the micro switch. Refer to the cross section shown in **Figure 2**.

   For the Model 12, the sensitivity of the pressure chamber is fixed by a small by-pass assembly, which is fastened to the diaphragm support. This by-pass controls the rate of air escaping past the diaphragm from the bellows side to the front of the diaphragm. The sensitivity is approximately 0.7kPa//1.0 PSI per second rate of pressure rise. The micro-switch is adjusted to close when 17.2 kPa is applied with either little or no air by-passing the diaphragm. Refer to the cross section shown in **Figure 3**.

These instructions do not purport to cover all details or variations in equipment nor to provide for every possible contingency to be met in connection with installation operation or maintenance. Should further information be desired or should particular problems arise which are not covered sufficiently for the Purchaser's purposes the matter should be referred to ABB Inc.

GW-1060 (1999/03)

8. A large silicone rubber diaphragm. This diaphragm is located behind the inspection cover and seals all the air in the front section. It is designed to equalize the internal pressure with that of the external pressure due to changes in ambient temperature and pressure.

INSTALLATION

NOTE:

The design allows for a maximum oil head over the top of the relay of 1.5 metres

1. Mount the relay at the highest point on the transformer cover with the gas escape bleeder valve below the minimum level of the oil in the conservator.
2. Locate the relay within 150mm of the edge of the transformer cover and clear of live parts. The natural frequency of the mounting should not be less than ninety cycles per second.
3. Install a direct connection between the transformer cover and the entrance to the relay to provide a path for the pressure wave.
4. To prevent damage to the bellows through shock in transporting the relay, a removable shipping plug, (18 mm wood doweling) is installed in the factory. In order to connect the relay, remove the ¾" pipe plug and remove the shipping plug located immediately behind the pipe plug. The shipping plug must be removed prior to making connections to the relay. The shipping plug must also b e replaced whenever the relay is to be transported any distance, either mounted on the transformer or not.
5. Mount the relay as shown in **Figure 4**. The connection should allow all the gas formed in the transformer to gather in the Gas Accumulation Chamber.

WARNING

ALL GAS PIPING TO THE RELAY MUST HAVE POSITIVE SLOPE

The valve in the pipe connection to the relay must be closed while the pressure test for oil leaks on the transformer is made. Sudden application of pressure over 20 kPa and up to 34 kPa to the relay may require that the relay be recalibrated. Sudden pressures over 34 kPa may damage the relay.

OPERATION

Gas Accumulation

The presence of gas in the relay indicates the possibility of a fault in the transformer. If the gas is flammable, decomposition gases are present and the transformer should be disconnected until the fault has been located and cleared. If the gas is not flammable, the unit should be left in service. The gas should be let out through the bleeder valve until oil emerges and the time and rate of gas accumulation should be noted. The air could be coming from a leak in a forced oil system or could be released from the oil itself after the transformer is placed in service.

The rate of accumulation of gas is more important than the total volume produced. Record of either time intervals between alarm or alarm chamber pointer positions against time, will indicate the degree of urgency of de-energization. A slow, uniform gas accumulation does not indicate immediate need for disconnection. However, accumulation at an accelerating rate does indicate that the transformer should be de-energized as soon as possible for examination and correction. Proceed as follows:

1. Take a syringe sample of the gas.
2. Take a syringe sample of the oil from the transformer.
3. Have both samples analyzed for types and quantities of gas present.

Check with transformer manufacturer for further instructions.

WARNING

DO NOT TEST FOR GAS FLAMMABILITY WITH AN OPEN FLAME AT THE BLEEDER VALVE

To prevent false tripping of the relay due to "water" hammer when the gas is being bled from the relay, follow this procedure:

1. Open gas escape bleeder valve one-half turn to clear oil from the small orifice.
2. Close valve one quarter turn.

20KPA = 2.9 Psi
34KPA = 4.93 Psi

3. Allow to bleed until oil appears.
4. Close valve.

WARNING

DO NOT REMOVE THE VALVE STEM COMPLETELY WHEN THE TRIP CIRCUIT IS ENERGIZED

Trip

An arc from a major fault within a transformer causes a rapid evolution of gas in the oil. This in turn produces a pressure wave. The pressure wave enters the relay through the ¾" pipe and compresses the flexible bellows. The air inside the bellows itself is compressed. It forces the flexible diaphragm forward. The button at the centre of the diaphragm pushes the operating pin of the microswitch closing its contacts. This actuates the equipment that disconnects the transformer from the line.

When a transformer has been tripped by the pressure mechanism of a gas detector relay, the fault that caused the incident should be located and corrected before the unit is re-energized.

Action of a forced oil cooling system may cause a false trip of a relay with a sensitive setting. Note that the Model 11 relay is more sensitive than the Model 12 or 11BC. A Model 12 relay may be better suited for transformers with pumped oil.

Electrical Relay System

1. The micro switch for the gas accumulation mechanism is located in the oil gauge. It is not replaceable. Leads from the switch are brought from the gauge into the front section of the pressure mechanism.
2. The microswitch for the pressure mechanism is located in the front section of the trip chamber.
3. The lead from the relay is a 4-conductor cable.
4. The switch ratings are given in **Table 1**.

Checking Operation

1. Check that the connection to the transformer tank is open.
2. Attach an air supply to the test check valve and force air in slowly. The air that displaces the oil will rise to the top of the accumulation chamber. The float will fall and the gauge will indicate the presence of gas.
3. Inject air rapidly. The pressure mechanism should operate. . Do not apply excessive pressure as the diaphragm and/or the micro switch will be damaged. See Testing – Trip Operation

   Note

   The pressure applied should not exceed 34 kPa/5 psi.

4. Remove the air from the relay by opening the gas escape bleeder valve in the manner described under "Gas Accumulation".

Characteristic Curve

The "Characteristic Curve" depicts the results of sensitivity tests made at both high and low rates of pressure rise. The curve shows the time and pressure of which the relay will operate for a wide range of rates of pressure increase. The relay will operate at the pressure rise condition above the curve, but will not operate at any pressure rise condition under the curve.

For example:

Model 11, Graph 1

A rate of pressure rise of 70 kPa/10 PSI per second will operate the relay in 0.052 seconds at 3.60 kPa/0.51 PSI.

The **Model 11 BC** relay has been desensitized for seismic regions and calibrated to meet the following specifications:

The sudden pressure element will operate when a rate of pressure rise of 34 kPa (5 psi) per second is injected into the relay.

The sudden pressure element will not operate when a rate of pressure is of 21 kPa (3 psi) per second is injected into the relay.

Model 12, Graph 2

A rate of pressure rise of 50 kPa per second will operate the relay at approximately 0.30 seconds and 17.2 kPa pressure.

MAINTENANCE

NOTE: If a relay fails routine maintenance tests, it should be returned to ABB or an approved service provider for repair. Customers should not attempt to repair the relay since special equipment is needed to re-calibrate to ABB specifications. ABB may not honor any warrantees' if the relay has been opened.

1. Under normal operating conditions, the gas accumulation chamber is filled with oil. As a result, the float remains stationary and the pointer does not move. Check the gas accumulation mechanism annually by introducing air in the manner described under "Checking Operation". This will cause the pointer to move on its pivot and wipe the interface clean. If the mechanism is inoperative, remove the relay and return to ABB for refurbishing.
2. Check the insulation system annually by carrying out a megger test on the relay at 250 volts. Disconnect the wires from the terminal blocks, and megger the alarm circuit (between black and white), the trip circuit (between red and green) and to ground (black, white, red and green to ground). If a low reading is measured, disconnect the cable at the relay and check the reading again. If the reading is still low, the problem is likely in the wiring to the relay and not the relay. A low megger reading in the relay can be an indication of moisture in the relay or contamination on the contacts. The relay should be returned for refurbishing.
3. Check the pressure mechanism in the manner described under "Checking Operation". This is a 'Go' – 'No-Go' test. If the mechanism does not operate, remove the relay and return it to ABB Inc. for inspection and recalibration.

TESTING – TRIP OPERATION

To test the operation of the relay, a means must be found to apply pressure to the relay test check valve. See **Figure 5**, for test check valve. With the relay either mounted on the transformer or bench mounted this may be done through the test check valve. A suggested method of test is outlined below.

1. Close the valve to the transformer (or place a pipe plug in the .75" diameter pipe tap fitting for oil connection).
2. Loosen valve element in test check (Schrader) valve by use of the test check valve cap wrench. Connect an air supply to the test check valve as shown in Figure 4.
3. Place the leads from a continuity tester across the red and green leads to determine switch operation.
4. Apply pressure to trip the relay in approximately two (2) seconds. (See Approximate Characteristic Curve.)
5. Greatly increasing or decreasing the time to reach trip pressure will tend to increase the pressure at which the contacts will close.
6. Between trip tests on the relay, release any pressure in the relay by venting via the bleeder valve. Also, allow approximately 3 to 5 minutes for the relay to adjust to its initial condition. Experience with each relay will determine the approximate period of time required.
7. Where the relay is mounted on the transformer, open the valve to the transformer and open the bleeder valve and close when oil runs out. Remove air supply, tighten valve element and replace cap of relay test check valve.

It is suggested that a pressure gauge be included in the test circuit to guard against applying excessive pressures to the relay. See instructions "Installation and Operation".

(The applied pressure should not exceed 34 kPa/5 psi.)

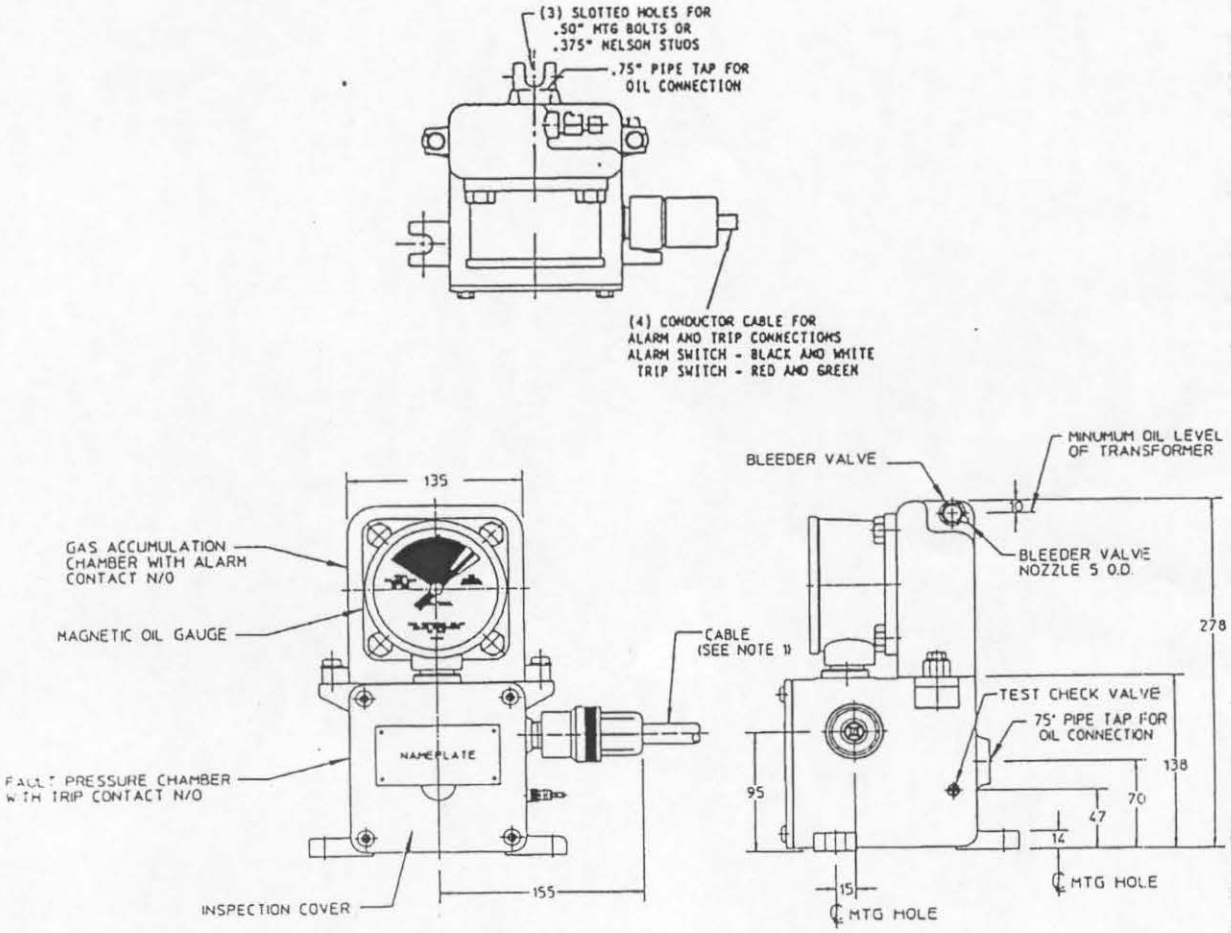

OUTLINE – GAS DETECTOR RELAY

FIGURE 1

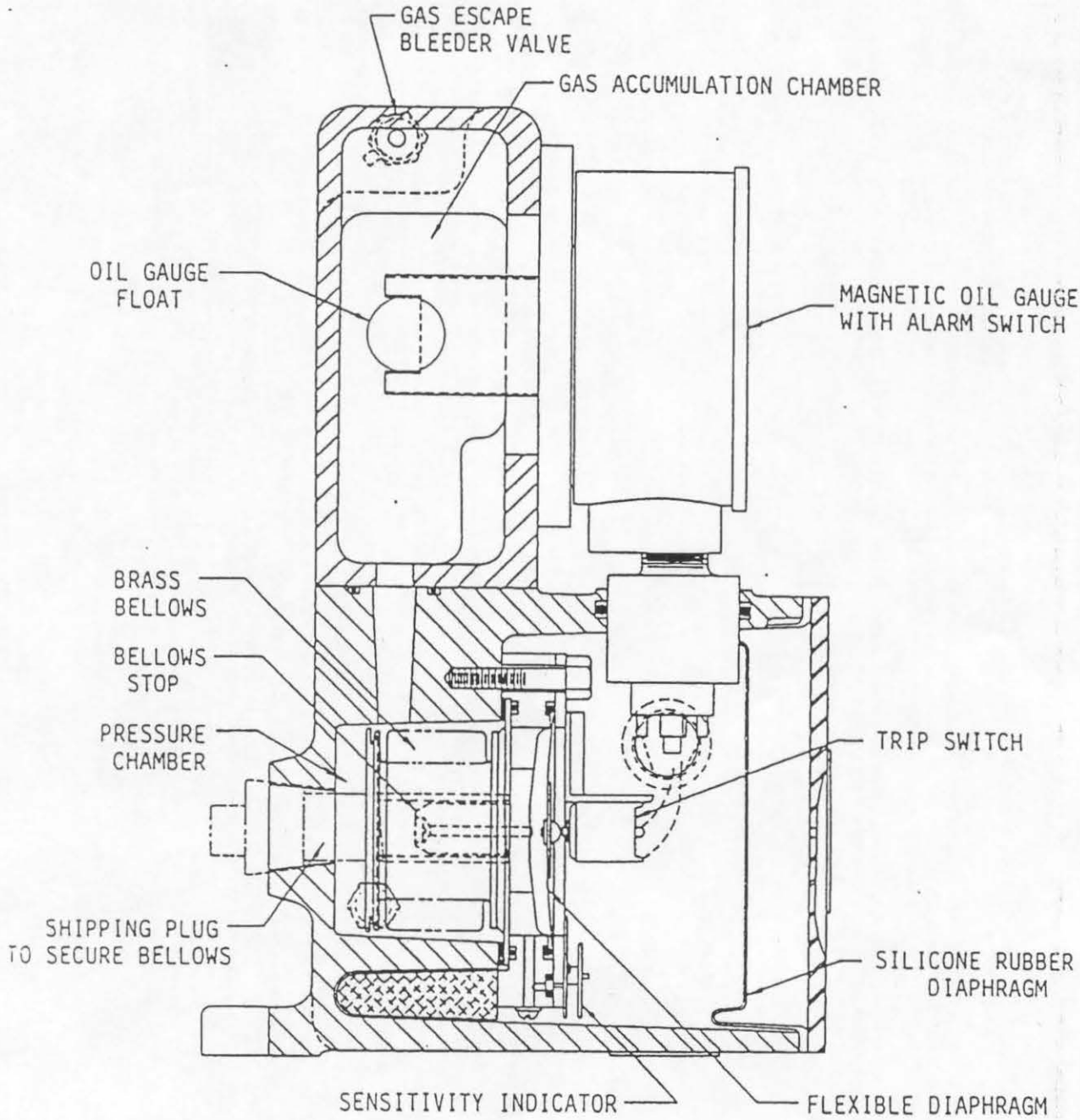

CROSS SECTION – GAS DETECTOR RELAY – MODEL 11

FIGURE 2

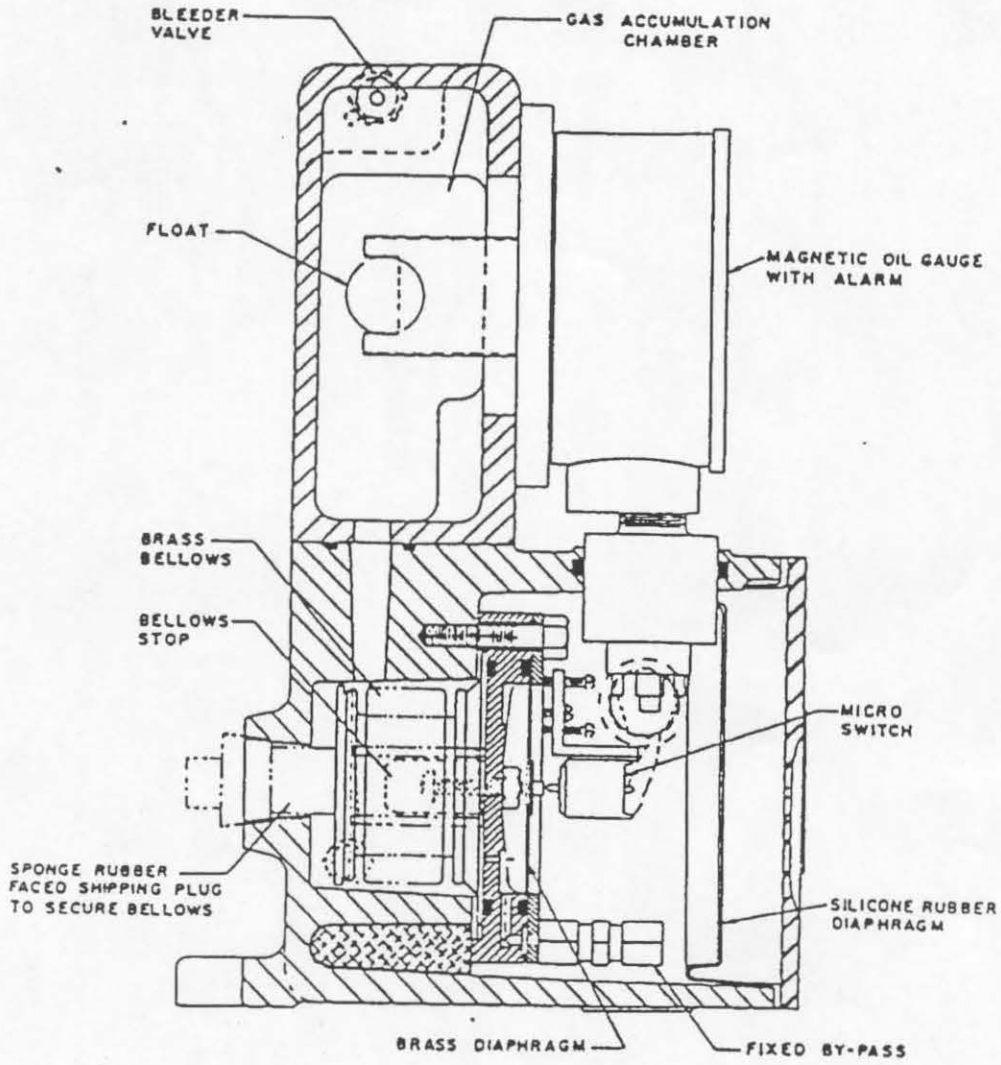

CROSS SECTION – GAS DETECTOR RELAY – MODEL 12

FIGURE 3

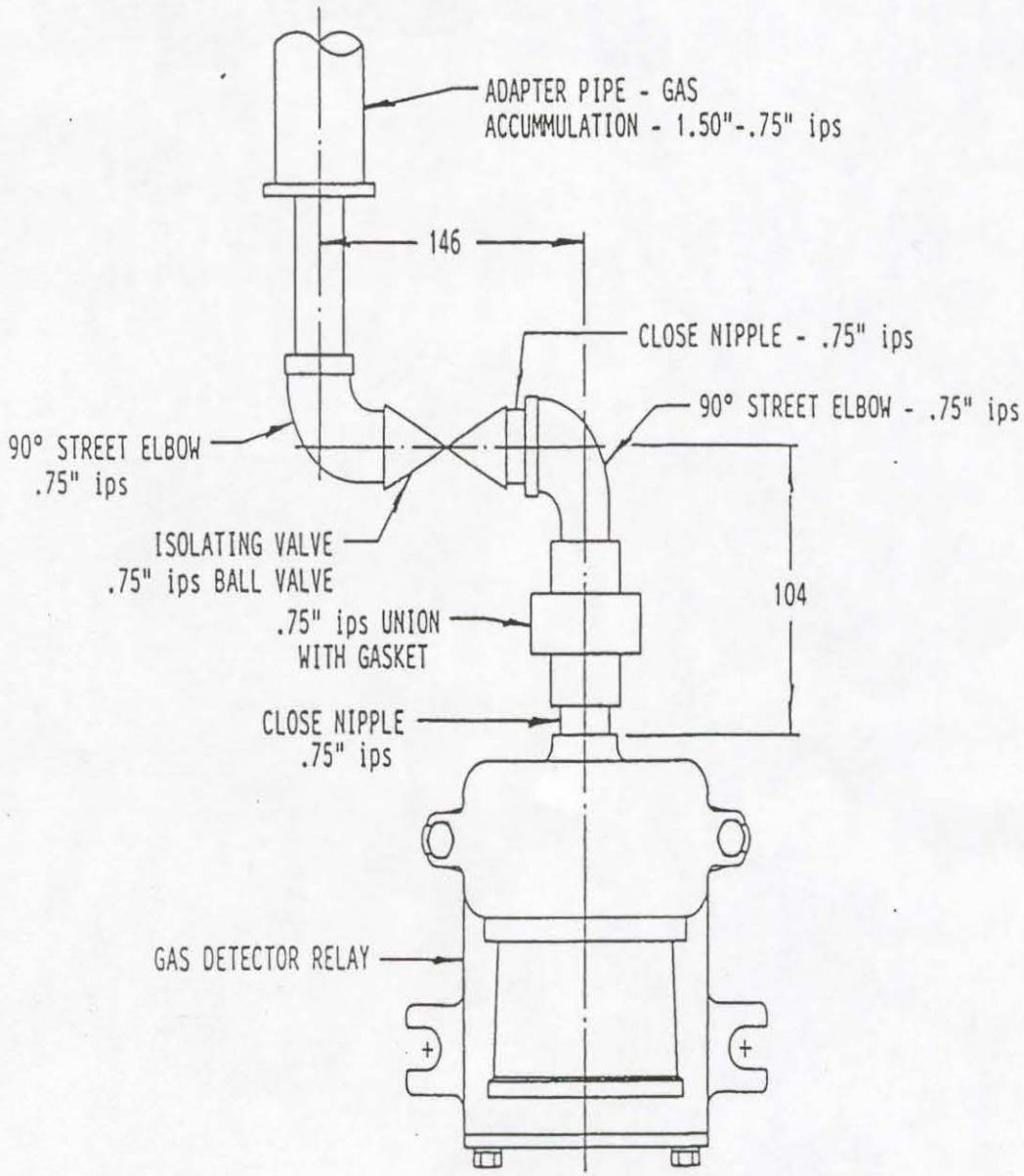

PIPING ARRANGEMENT – TYPICAL

FIGURE 4

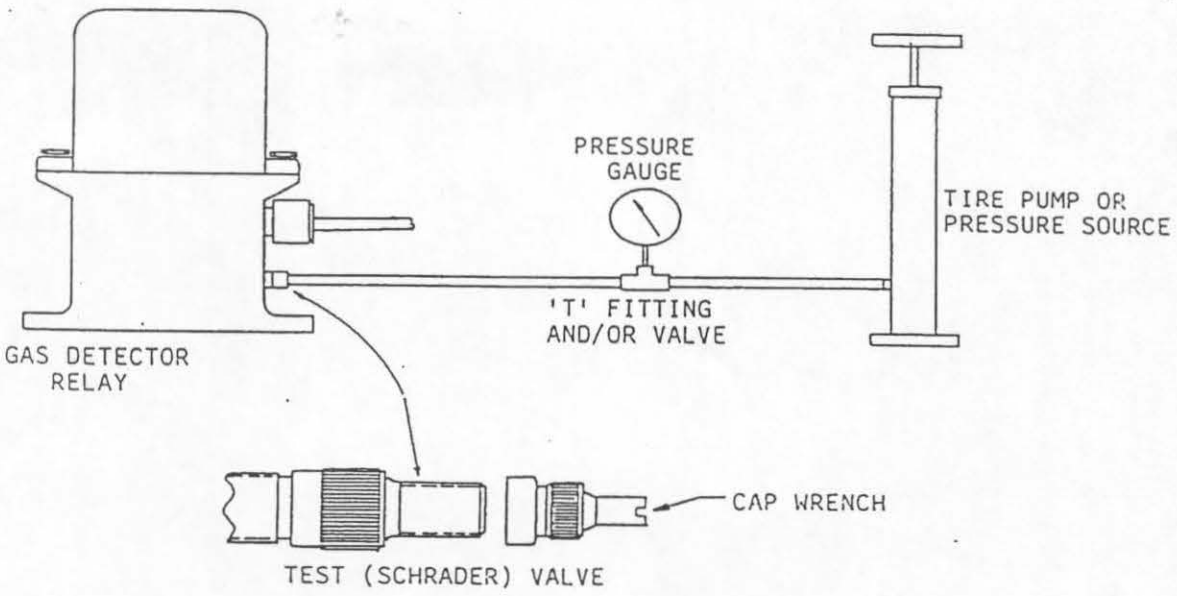

TESTING – TRIP OPERATION

FIGURE 5

The snap action switches in the relay will break the following loads:

Switch	Current Rating Amperes	AC Voltage 60 Cycles	DC Voltage	Remarks
Alarm	5	115 TO 230		
	.25		120	Non Inductive
	.20		240	Non Inductive
	.043		120	Inductive
	.028		240	Inductive
Trip	15	125 to 250		
	.50		115	Non Inductive
	.25		230	Non Inductive
	.05		115	Inductive
	.03		230	Inductive

SWITCH RATINGS

TABLE 1

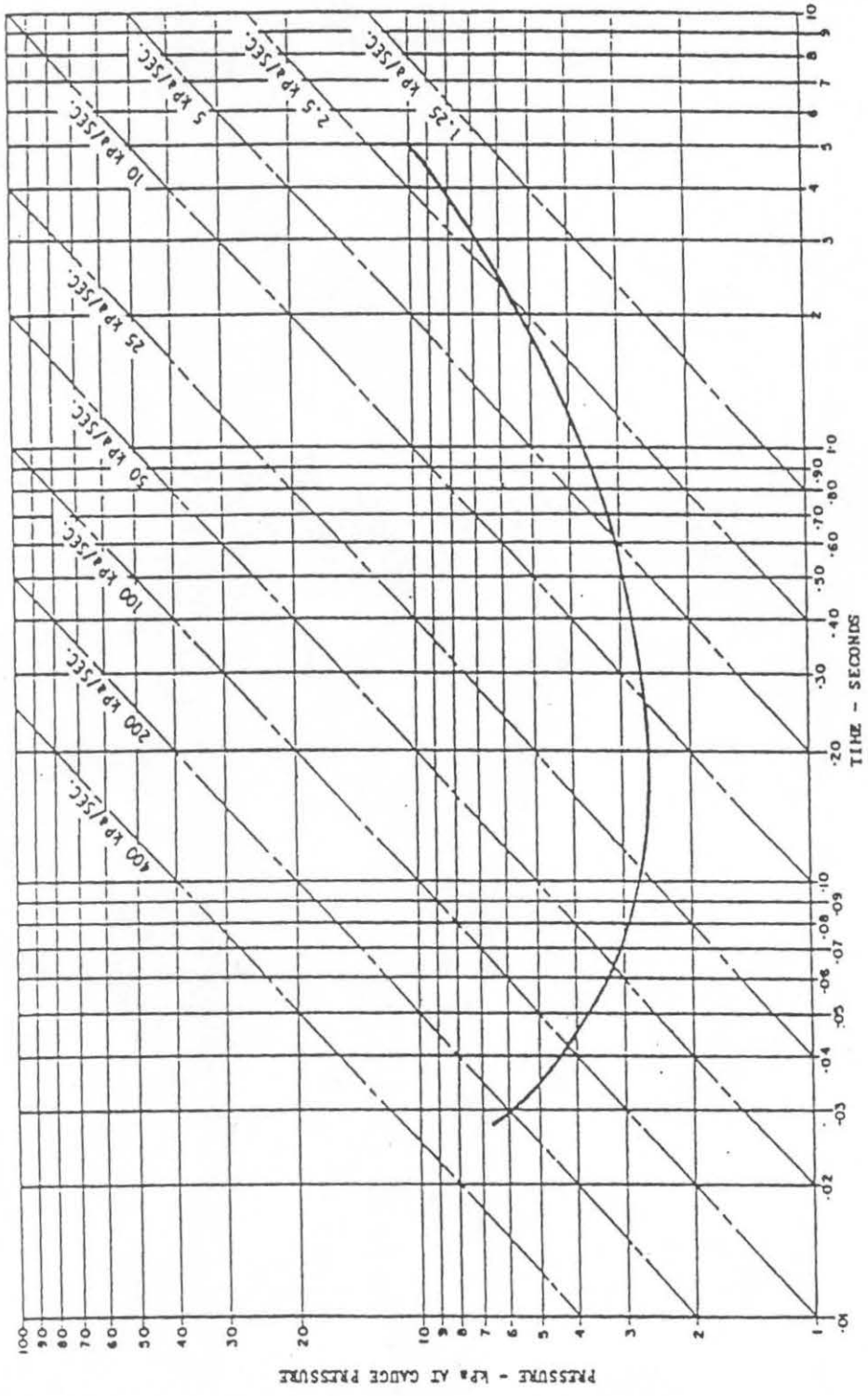

CHARACTERISTIC CURVE MODEL 11
(Pressure vs. Time for Trip Switch Operation)
GRAPH 1

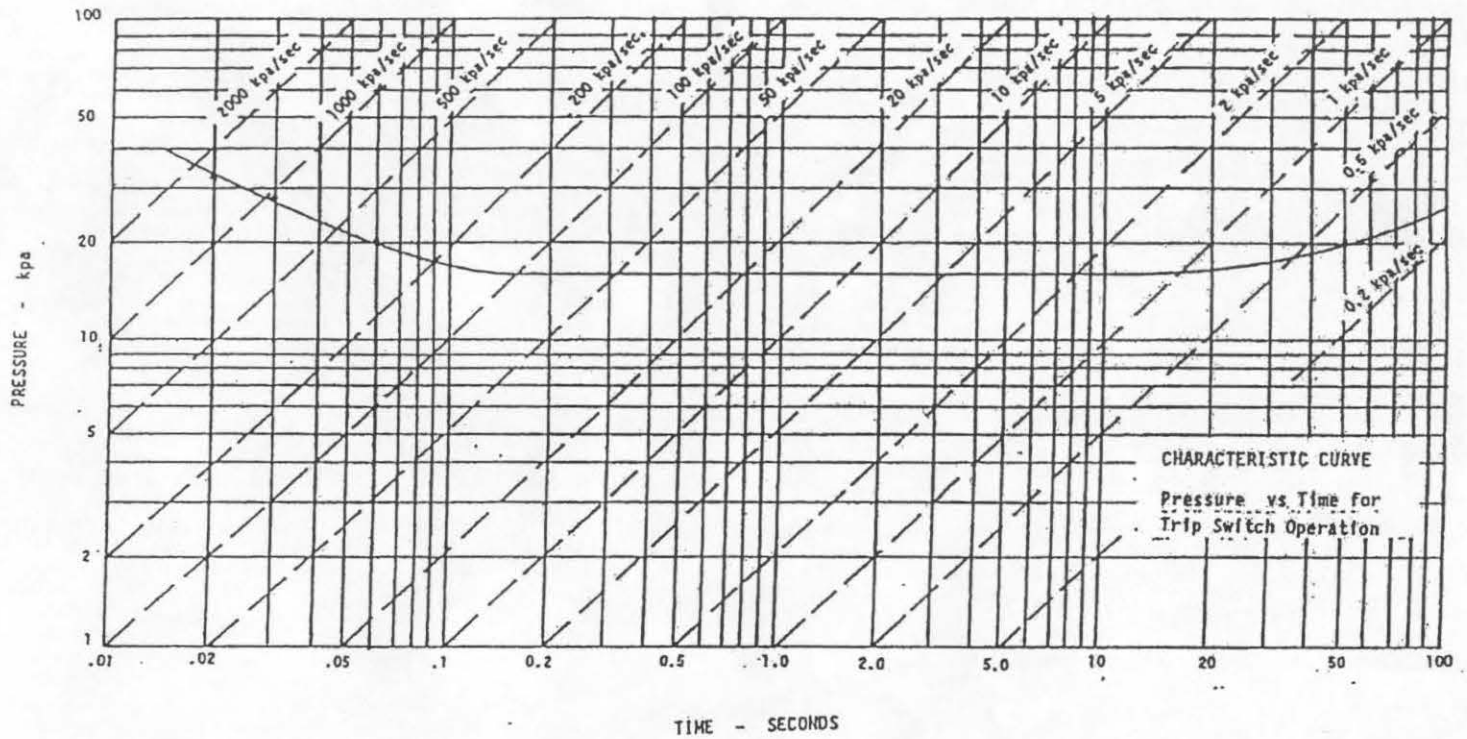

CHARACTERISTIC CURVE MODEL 12
(Pressure vs. Time for Trip Switch Operation) GRAPH 2
GRAPH 2

O.F. Lane SUPREME POWER SUPPLIES LTD.

P-140
-139
-197

ENGINEERING DE
TRANSFORMER FILE

SAVOISIENNE

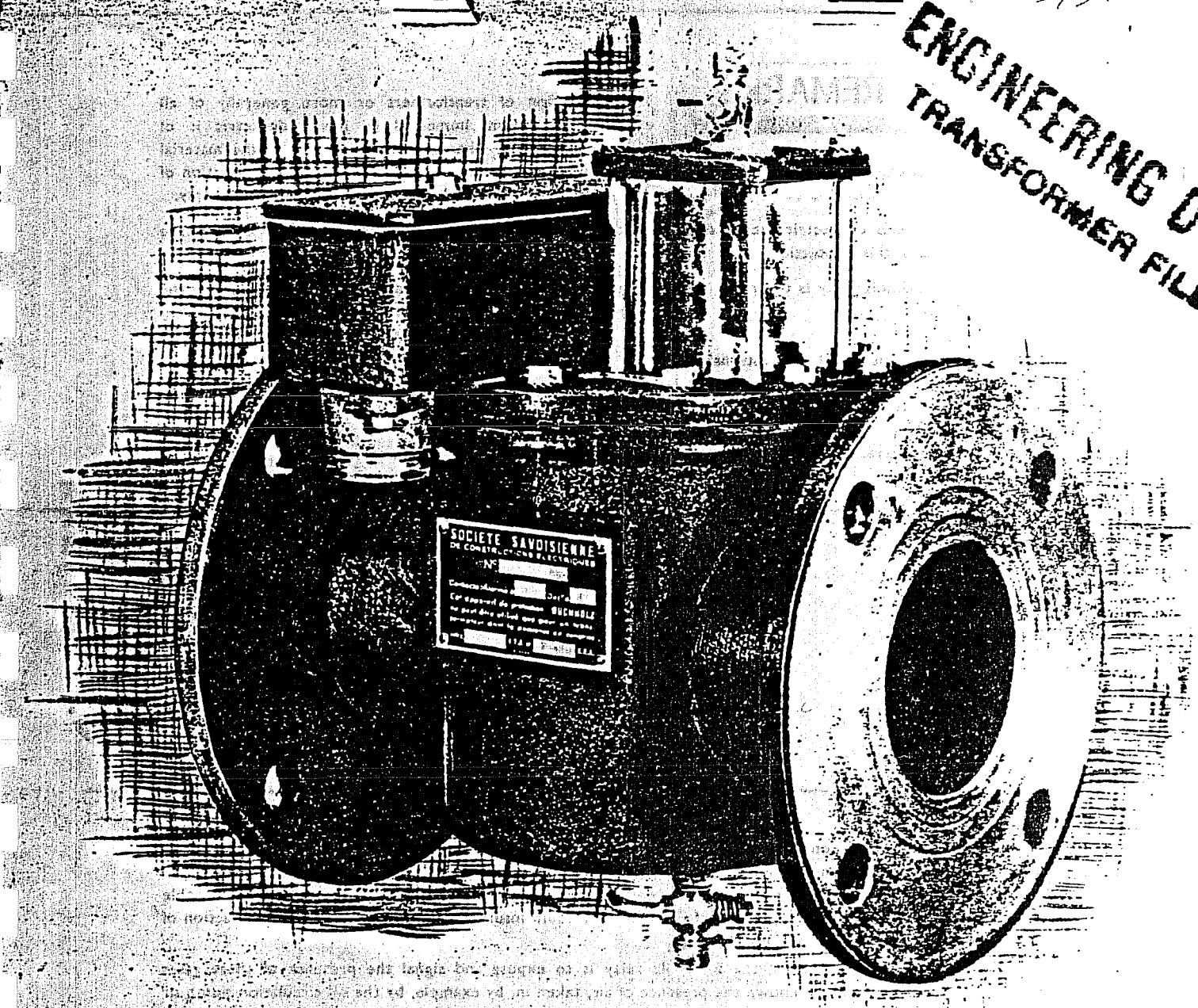

BUCHHOLZ

BUCHHOLZ PROTECTION RELAY

FUNCTIONING

The very reliable functioning of the Buchholz relay causes the closing — or on request the opening — of two contacts, one controlling an alarm signal and the other the tripping apparatus of the circuit breakers.

For this purpose, the housing containing these contacts is inserted in a pipe connecting the tank of the transformer to the oil conservator. This pipe is arranged in such a way as to collect the whole of the discharge gases which may take place in the tank.

Referring to the figures 1a and 1b here shown, the two contacts c1 and c2 are controlled by two metallic floats b1 and b2. These movable floats normally occupy a position determined by the vertical thrust from below in an upwards direction which they receive from the oil or other liquid insulating medium filling the housing from the oil conservator. When there takes place a small fault, the discharge of gas bubbles coming from the transformer provokes the lowering of the level of the oil and simultaneously that of the float b1 in the body of the relay. This results in the closing of the contact c1 for a determined volume of gas.

The functioning of the alarm signal will thus take place in a diminishing period of time in proportion to the quantity and the speed of the discharged gases and by consequence with the serious nature of the fault.

The float b2 situated continually in the oil will not be affected by this phenomenon.

On the other hand a violent discharge of gas resulting from serious faults in the interior of the transformer, provokes the instantaneous operation of the float b2 and the closing of the contact c2 which will act on the circuit of the tripping coils and will determine the functioning of the switch breakers as well as that of the alarm signal.

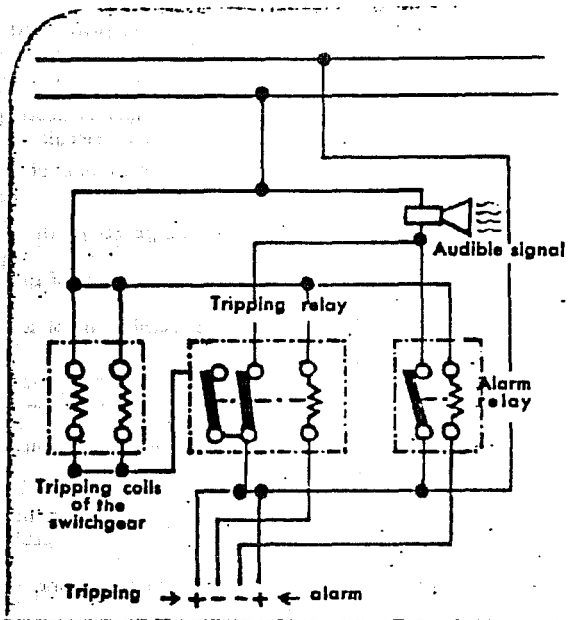

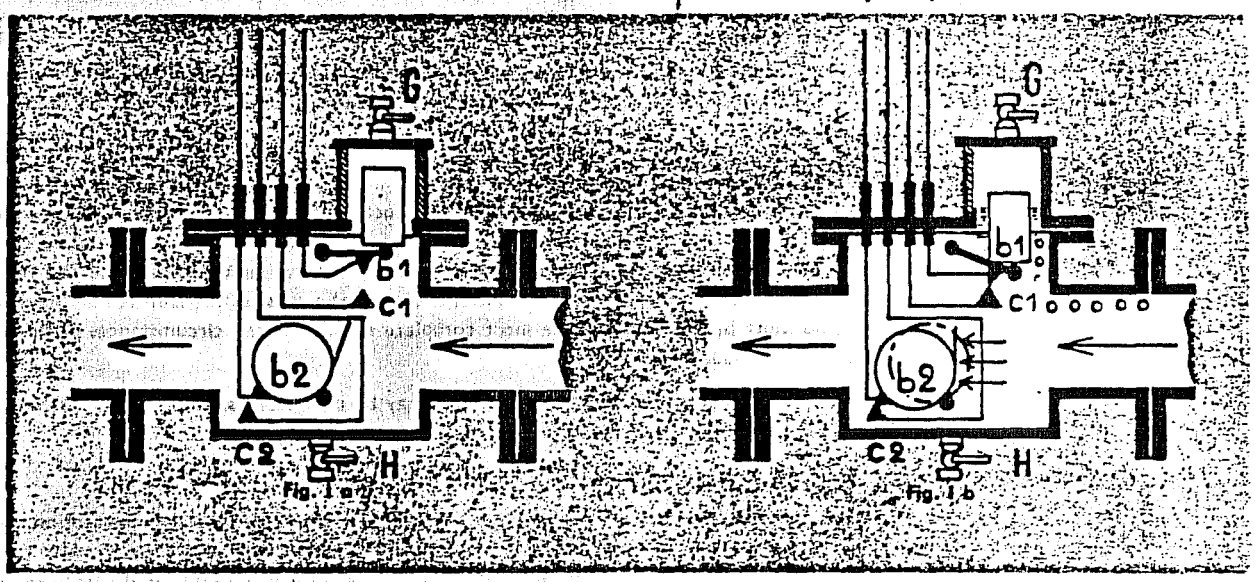

DESCRIPTION

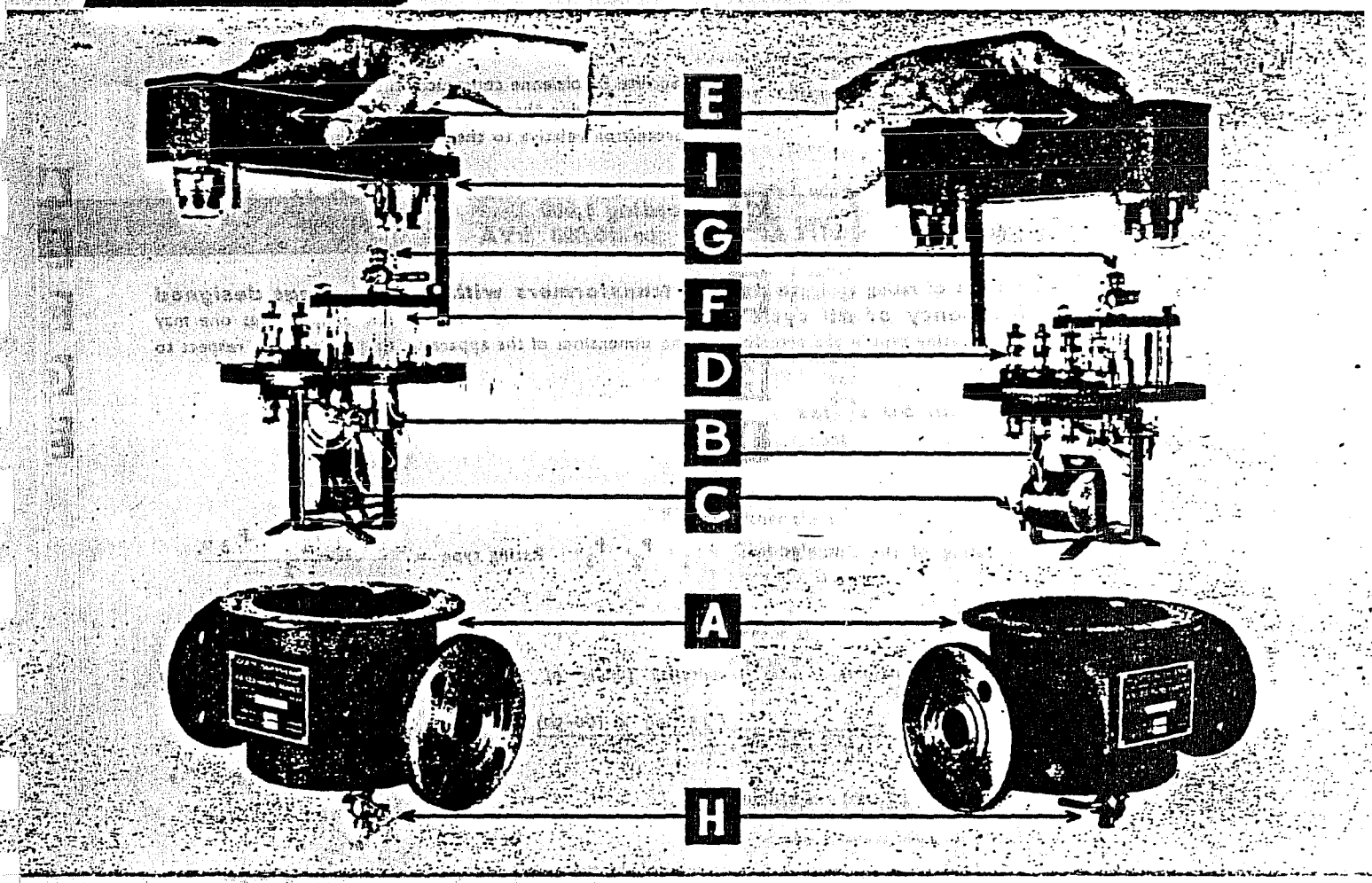

As shown in the figure herewith, the following elements enter into the construction of the Buchholz relay :

A 1 steel body with two connection flanges.

B 2 oil-tight independent metallic floats, able to pivot around an axle.

C 2 single-pole mercury contacts c1 and c2.

D 4 porcelain terminals situated on the cover of the relay, corresponding to the two independent electric circuits.

E 1 rainproof cover for the terminals provided with two stuffing glands permitting the connection by armoured cable.

F 1 window formed by a cylinder of pyrex glass situated vertica on the cover permitting the amount of the accumulated to be seen.

G 1 relief-cock placed on the window, and able to serve for the sa pling of the gas and also for the verification of the functioning the alarm signal.

H 1 drain-cock placed beneath the body of the relay able to serve verify the functioning of the tripping contact and also for t draining of the relay.

I 1 control lever to verify the functioning of the contacts.

The construction of the Buchholz relay permits either the erection in cubicles or in the open air.

The Buchholz relay may be connected to an A. C. supply or to a D. C. supply ; in the latter case, one must take care to fill the connection box with paraffin or a similar product in order to preserve the terminals from the action of electrolysis.

The contacts arranged for alternate or direct current allow a maximum current of 10 amperes and a maximum voltage of 380 volts, which must be used in practice for the limit powers defined by the following values :

110 volts - 10 amperes | 220 volts - 5 amperes | 380 volts - 2 amperes

The voltage test of the relay is 2 000 volts for 1 minute at a frequency of 50 cycles, in oil.

b) — WITHOUT SECONDARY WINDING :

$$\text{Rating type} = \frac{\text{voltage of the supply} \times \text{maximum earth current}}{\sqrt{3}} \times \tfrac{1}{2}$$

Example : *Arc extinction coil for 60 kV with earth current tappings of 10, 12 and 14 amperes*

$$\textit{Rating type} = \frac{60 \times 14}{\sqrt{3}} \times \tfrac{1}{2} = 242\ kVA$$

• Relay type 1 " •

Inductance coils without secondary winding

Rating type = inductive rating × ½

Example : *Coil for traversing power of 15 000 kVA used to increase the impedance of an apparatus by 2 %*

$$\textit{Rating type} = \frac{15\,000 \times 2}{100} \times \tfrac{1}{2} = 150\ kVA$$

• Relay type 1 " •

Measuring transformers — discharge coils — testing transformers or similar auxiliary transformers

For these apparatuses whose service voltage determines the size as well as, and often even more, than the rating, is based as previously on its own rating but does not descend lower than the 2" type for voltages higher than 136 KV.

Examples : *Potential transformer of 150 kV*

• Relay type 2 " •

Transformer for short circuit tests having a proper rating of 20 000 kVA —

• Relay type 3 " •

Static capacitors

Rating type = apparent power at the nominal voltage.

Example : *Capacitor of 66 kV and capacity of 0 01 μF*

$$\textit{Rating type} = 66^2 \times 0.01 \times 0.314 = 14\ kvar$$

• Relay type 1 " •

Resistances

Rating type = power absorbed at the nominal voltage × 20.

Example : *Resistance of 30 ohms used with voltage of 1 500 volts (i. e. I = 50 A.)*

$$\textit{Rating type} = \frac{30 \times 50^2}{1\,000} \times 20 = 1\,500\ kVA$$

• Relay type 1 " •

Apparatuses on temporary full load

Rating type = 10 % of the nominal rating valid for 0 to 1 minute + 1,5 % for each additional minute of operation.

Examples : *1) Testing transformer able to supply 100 000 kVA for a period of 1 minute*

$$\textit{Rating type} = \frac{100\,000 \times 10}{100} = 10\,000\ kVA$$

• Relay type 2 " •

2) Transformer of 10 000 kVA for a period of 5 minutes

$$\textit{Rating type} = \frac{10\,000 \times (10 + 4 \times 1.5)}{100} = 1\,600\ kVA$$

• Relay type 1 " •

Current rectifiers

Rating type = power delivered on the D. C. side × $\frac{1}{12}$

Example : *Rectifier supplying 2 000 amperes at 500 volts D. C.*

$$\textit{Rating type} = \frac{500 \times 2\,000}{1\,000} \times \frac{1}{12} = 83.3\ kVA$$

• Relay type 1 " •

ERECTION

The figures below give the schematic representation of the Buchholz relay and the best position for erecting on the transformer. This position being respected, any leak of oil is made known on condition that it appears at a lower limit than that of the relay.

A simple erection of the Buchholz relay must take into consideration the following principles :

1° — In normal service the relay must be full of oil ; and will be mounted in such a way that the highest point (the top of the higher gas discharge cock) is situated at a lower level than the minimum level of the oil in the oil conservator.

2° — In the equipments of which the oil communicates with adjacent compartments, it is necessary that the level of this oil is not less than a certain limit h.

In order that the Buchholz relay may completely fulfil its function of protection, it is necessary that the highest part be situated at least 100 mms above this limit h defined below.

For the terminals constructed by the Societe Savoisienne and provided with a window the limit h is carried to the highest point of the window according to the figure 1.

For the Savoisienne terminals without window, this limit h is situated in the highest first quarter, according to the fig. 2.

For the adjacent oil compartments of which the limit h is not defined, which is generally the case when their oil is not in communication with that of the transformer or for a greater reason when the adjacent compartment does not contain oil at all, the relay may be situated immediately above the cover on condition that the necessary distance for the draining and for the introduction of the testing equipment be respected.

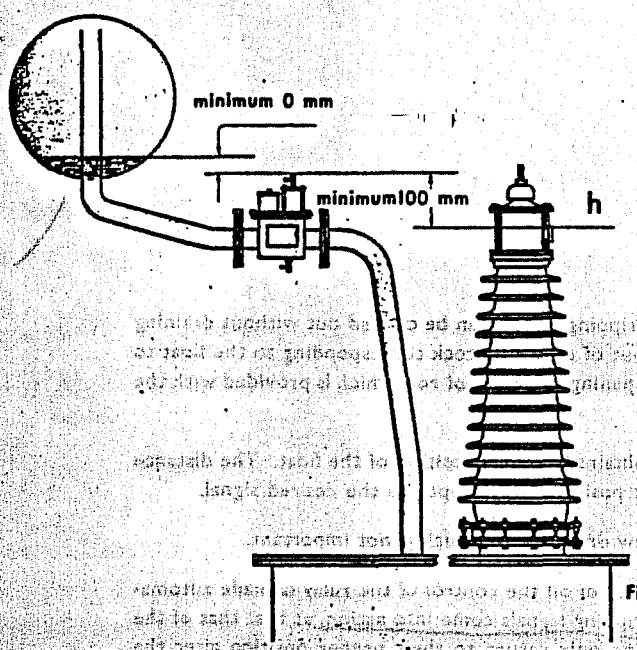

Fig. 1

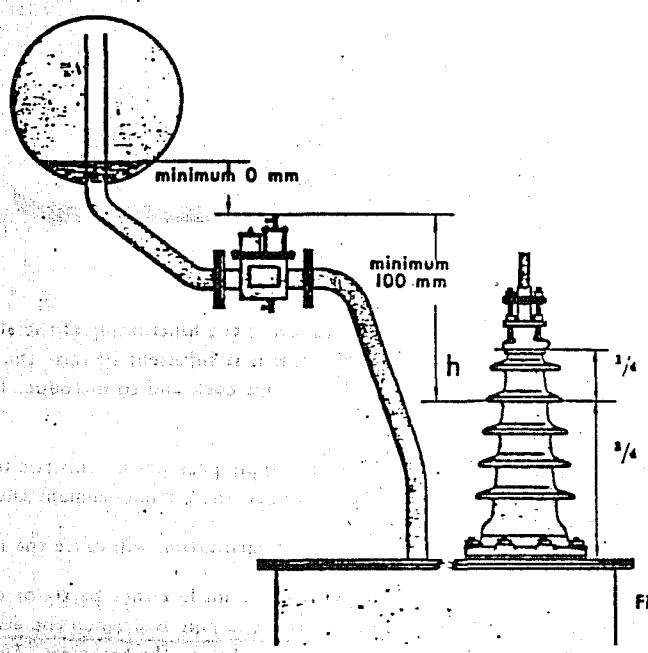

Fig. 2

3° — For the terminals of which the oil communicates with that in the tank, all precautions must be taken to avoid that a possible discharge of gas is directed to the interior of the adjacent compartments, towards their highest part, instead of being directed to the pipe in which is situated the Buchholz relay.

SPECIAL DEVICES FOR VERIFICATION PURPOSES

The regular checking of the Buchholz relay is made more conveniently if the installation itself includes a special verification device. The Societe Savoisienne has therefore made researches to realise this improvement and can now on request supply the one or the other of the following devices :

a) DEVICE FOR THE REMOTE ELECTRICAL VERIFICATION OF THE ALARM AND TRIPPPING CIRCUITS.

This device permits at will, by push buttons from the control board, the lowering of the floats in the absence of any gas discharge, by the use of electro-magnets. One may also verify, successively and instantly, in the course of service, the operation of the contacts and circuits of alarm and tripping.

This device must be specified with the order as the relay must be specially constructed to receive this device and cannot be furnished separately to equip an existing relay.

b) PNEUMATIC DEVICE FOR THE COMPLETE VERIFICATION OF THE RELAY

This device realises the complete verification of the relay by reproducing the same conditions causing the operation of the floats. It consists of a pump specially designed to be inserted in the pipe between the transformer and the Buchholz relay. When the transformer is not in service one may operate this pump either to induce a lowering of the oil level and consequently the operation of the alarm float, or to obtain by the abrupt delivery of the oil the operation of the tripping float.

This pump may be delivered separately, and by a simple modification of the pipe, can be attached onto any existing installation.

INFORMATION TO BE GIVEN WITH THE ORDER

The following information is necessary in order to deliver a Buchholz apparatus :

- type of Buchholz relay (1" - 2" - 3"), or the characteristics of the electric machine to be protected.
- operation of the warning contact : opening or closing of the signalling circuit at the time of the operation of the relay.
- operation of the tripping contact : opening or closing of the tripping circuit at the time of the functioning of the relay.

  (Unless otherwise definitely indicated the relays delivered operate when the contacts are closed).

  The changing of the contacts from closing to opening or inversely is made by the reversal of the mercury tube but this is a delicate operation and must in general be carried out at the maker's factory.
- the nature of the insulating medium used (the Pyralene for example requires other joints than those when oil is used).

P-109 Brooktown Sub Auto

Weir

Mark 10 Gas & Oil operated (BUCHHOLZ) Relays
Types DE SE SET

PATENT APPLIED FOR

FOR THE PROTECTION OF OIL FILLED TRANSFORMERS, CAPACITORS, REACTORS AND ON LOAD TAP CHANGE EQUIPMENT

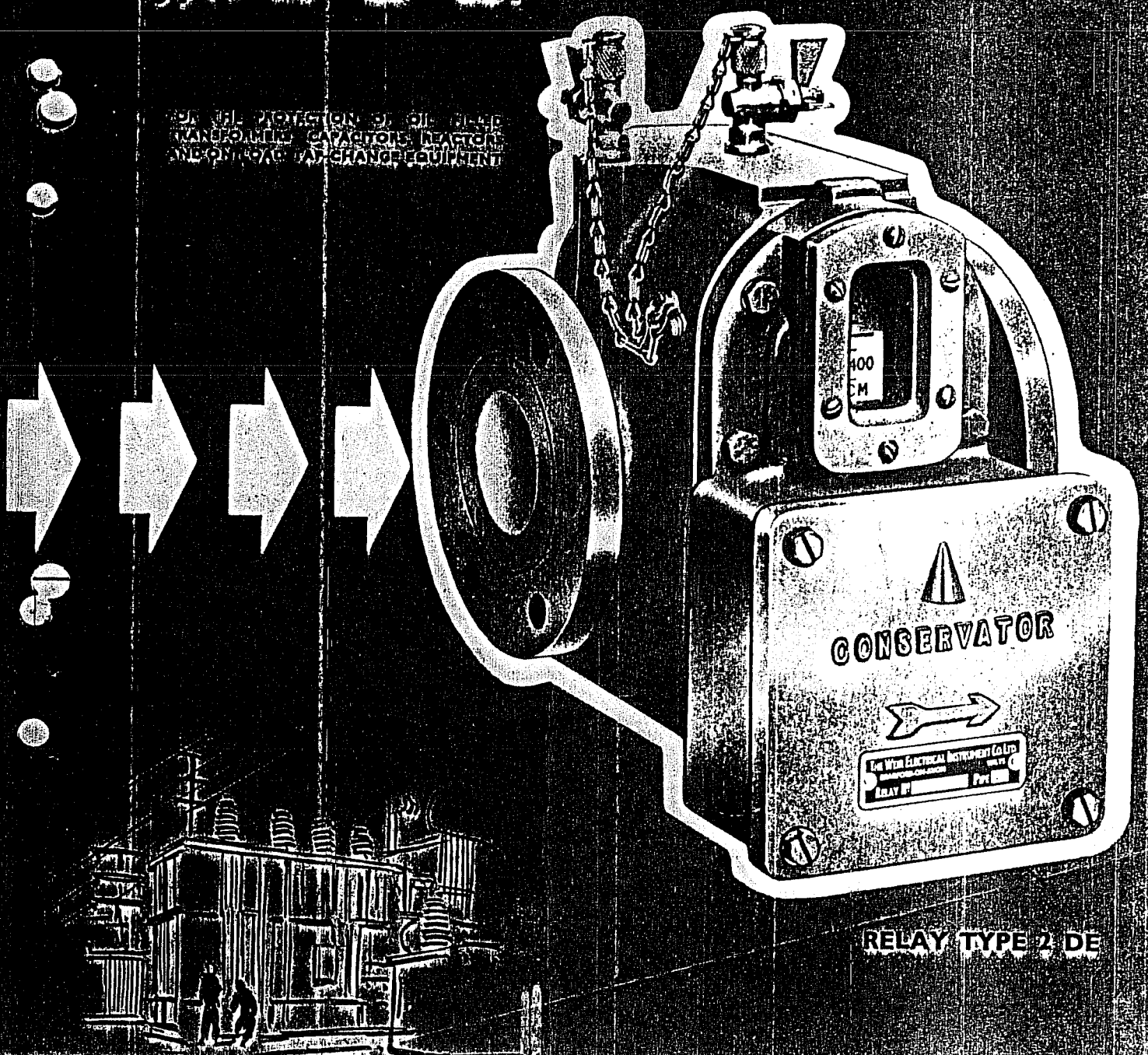

RELAY TYPE 2 DE

OIL OPERATED (BUCHHOLZ) RELAYS

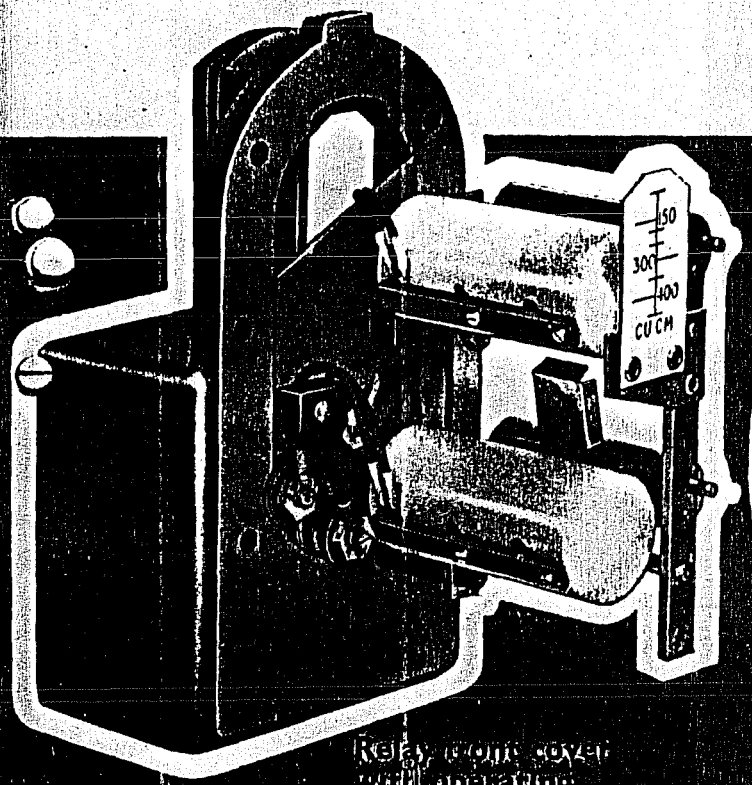

Relay front cover with operating mechanism

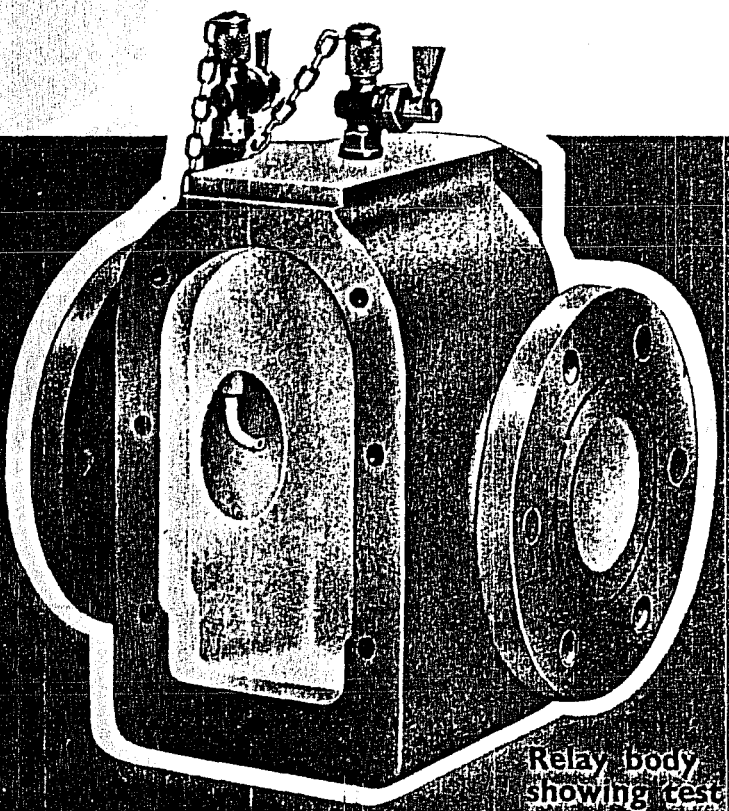

Relay body showing test jet

- NO FLOATS OR OPEN CONTAINERS
- ANTI-VIBRATION MERCURY SWITCHES
- MINIMUM NUMBER OF MOVING PARTS

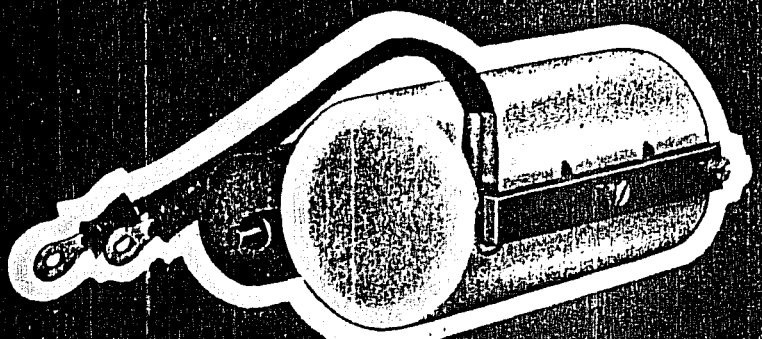

Relay alarm element assembly showing mercury switch mounting

Weir

WEIR MARK 10 GAS AND

ADVANTAGES OF THE MARK 10 RELAY

(1) There are no floats or open containers which can be punctured or collect sludge, with consequent loss of buoyancy.

(2) The mercury switches are of a special type to prevent mal-operation due to excessive transformer vibration. A sample relay of this type has been submitted to a continuous 3000 hour vibratory test. During this test, the relay was vibrated to an amplitude of 0.01 in. peak to peak at a frequency of 100 cycles per second. The mercury switches were connected to sensitive detecting equipment and no mal-operations were recorded.

(3) The mercury switches are spring mounted within the switch cylinders and protected from possible damage.

(4) The simple, clean, robust design has reduced the number of moving parts to a minimum.

APPLICATIONS

Most faults in an oil filled transformer are accompanied by the generation of gas. By using a suitable relay the formation of this gas can be used as a warning of a developing fault.

Double element relays can be used for detecting minor or major faults. The alarm element will operate, after a specified volume of gas has collected to give an alarm indication. Examples of incipient faults are:

(*a*) Broken-down core bolt insulation.
(*b*) Shorted laminations.
(*c*) Bad contacts.
(*d*) Overheating of part of the windings.

The alarm element will also operate in the event of oil leakage, or if air gets into the oil system.

The trip element will be operated by an oil surge in the event of more serious faults such as:

(*a*) Earth faults.
(*b*) Winding short circuits.
(*c*) Puncture of bushings.
(*d*) Short circuits between phases.

The trip element will also be operated if a rapid loss of oil occurs. Single element relays can be used to detect either incipient or major faults in oil filled potential transformers, reactors, capacitors etc. A special single element relay is available for the protection of on load tap-change equipment.

CONSTRUCTION AND METHOD OF OPERATION

The relay consists of an oil-tight container fitted with two pivoted elements (one, in the case of the single element type). It is situated in the pipe line between the transformer and the conservator tank, so that under normal conditions it is full of oil.

The operating force relies on the principle that, when a body is immersed in a liquid it appears to lose weight.

The operating mechanism consists of a solid non-metallic cylinder containing the mercury switch, counterbalanced by a smaller solid metal cylinder. Both cylinders are riveted together and are free to rotate about the same axis, the amount of rotation being controlled by stops.

When the relay is empty of oil, the weight of the switch cylinder predominates and the system rests against the bottom stop, the mercury switch being in the closed circuit position.

When the relay is full of oil, both cylinders appear to lose weight, but due to the different densities, the switch cylinder appears to lose enough weight to enable the weight of the counterbalance cylinder to predominate and rotate the whole system until it reaches the top stop, with the mercury switch in the open circuit position.

When a slight or incipient fault occurs in the transformer, the gas generated will collect in the top of the relay housing. As the gas collects, the oil level will fall and increasing amounts of the alarm switch cylinder will appear above the oil level. This results in a gradual restoration of the apparent lost weight, until the weight of the switch cylinder predominates. The element then rotates as the oil level continues to fall and eventually the alarm switch operates.

When a serious fault occurs, the generation of the gas is so rapid that an oil surge is set up through the relay. This oil flow will impinge on the flap fitted to the trip element causing it to rotate about its axis and so bringing the mercury switch to the closed circuit position, which in turn operates the tripping devices.

In the event of serious oil loss from the transformer, both alarm and trip elements operate in turn, in the manner previously described for gas collection.

MOUNTING POSITION

The connecting pipe between the transformer and the conservator tank should be as straight and as long as possible. It must be arranged to slope upwards towards the conservator, at an angle of about 3 to 7 degrees to the horizontal. There should be a straight run on the transformer side of the relay of at least five times the internal pipe diameter, and at least three times the internal pipe diameter on the conservator side. A machined surface is provided on the relay body, for the purpose of testing the mounting of the relay in both the inclined and horizontal directions.

CONNECTIONS

Alarm and tripping circuit connections are made to OBA terminal stems in terminal box and secured by OBA locknuts and washers.

Terminal boxes are normally drilled and tapped for bottom entry for 1 in. conduit or Pyrotenax gland. Side entry can be supplied if requested.

Note: If the relay is repainted on site, care should be taken that the vent and drain holes in the terminal box are not clogged.

OPERATING CHARACTERISTICS

WEIR MARK 10 Relays are made in three sizes and three types. The sizes are distinguished by the numeral prefix 1, 2 or 3. This refers to the diameter in inches of the bore of the oil pipe connecting the transformer with the conservator tank.

Types are distinguished by lettered prefixes DE for double element SE for single element and SET for single element tap-change. For example a 2DE relay is a double element relay for use on a transformer having a 2 in. pipe connecting the transformer with the conservator tank.

All double element relays are adjusted so that their performances lie within the limits given in the table below, which are the same as those given in the British Electricity Boards Specification T2.

Typical operating figures for Single Element Type 1SE are 150 cc gas and 65-90 cms/sec for oil surge. The Tap-Change Type 1 SET operates on oil surge at an oil velocity of 45-60 cms/sec.

DOUBLE ELEMENT TYPE			
Size and Type	Steady Flow of Oil (centimetres / secs.) To operate Trip Element Switch		Transformer Protected
	At pipe Angle 1°	At pipe Angle 9°	
1 DE	Not less than 70	Not more than 130	Up to 1,000 KVA
2 DE	Not less than 75	Not more than 140	1,001 to 10,000 KVA
3 DE	Not less than 90	Not more than 160	Exceeding 10,000KVA
At a pipe angle of 5° the alarm element switch operates at an oil level approximate to the 250 mark on the window scale. The actual value is marked on the test card supplied with each relay.			

Assembled relays are pressure tested with transformer oil at 20 p.s.i. for 15 minutes. Electrical circuits are flash tested at 2000 volts R.M.S. and the insulation resistance measured at 500 volts is not less than 10 megohms in air. Alarm and trip circuit mercury switches will make, break and carry continuously 2 amp. at 250 volts A.C. or D.C. They will also make and carry for 0.5 sec. 10 amp. at 250 volts A.C. or D.C.

IMPORTANT

The various parts of a relay, including the body, form one complete calibrated unit and must not be interchanged with those of other relays.

We strongly recommend that relays should not be taken apart, and in no circumstances should any alteration be made to the angle of the flap on the trip element. This has been correctly adjusted during manufacture.

Cape Broyle
Plant xformer T1

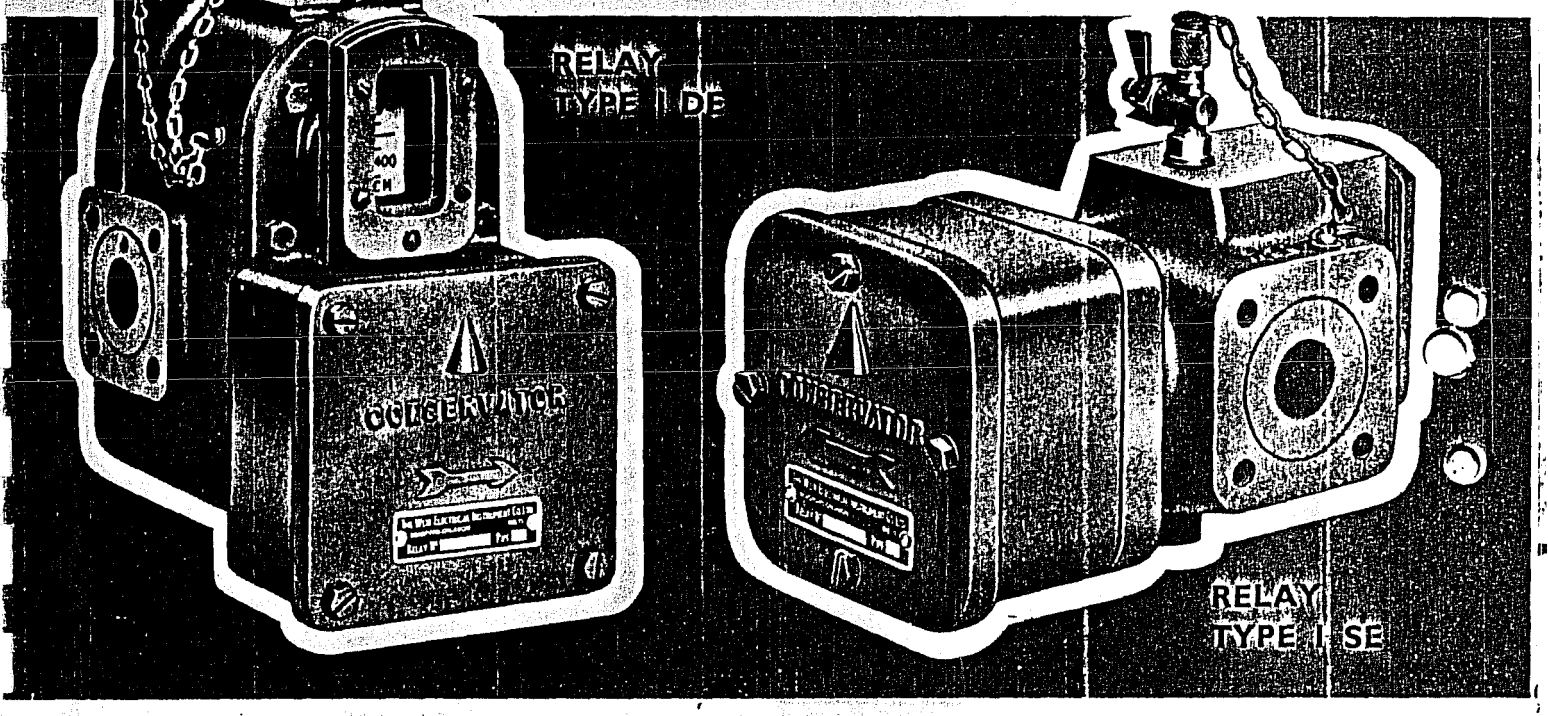

The oil level in the double element relays can be observed against a graduated scale through windows on both sides. A single window only is provided for the single element relay.

The single element relay has only one operating element and it responds to either gas collection or oil surges. The method of operation is similar to that described for the double element-type. Single element relays are suitable for the protection of oil filled reactors, capacitors and potential transformers. The single element tap-change relay has been specifically designed for use with on load tap-change equipment and it will by-pass normal amounts of gas which are generated by tap-change operations and will only respond to oil surges.

TESTING ON SITE

The double element relays are provided with a separate pet-cock to enable either the air or oil injection methods to be used for testing on site.

To test the operation of the alarm element, air from an air-bottle should be admitted slowly so that the alarm element falls gradually until the switch operates.

To test the trip element, the valve controlling the bottle is opened quickly so that air or oil rushes in, impinges on the flap and depresses it, operating the switch.

Note: When employing either of these testing methods it should be remembered that the operating pressure needed in the air or oil bottle to actuate the trip element, bears no relationship to the oil velocity operating figure. It must be looked upon simply as a means of checking that the trip element is operating and nothing more. There are so many variables in the size of the air or oil bottles, length of connecting hose, speed of opening the pet-cock etc., that it is impossible to lay down a standard operating pressure for any relay.

Due to slight internal variations in the relay it is by no means certain that two similar relays will operate at the same pressure. The important point to remember is that the actual oil velocity needed to operate the trip element has been accurately measured by special test equipment during manufacture and the relay has been adjusted to come within the specified limits.

On each relay a pet-cock is provided for taking samples and releasing gas from the top of the relay housing. This can be adapted for gas sampling at ground level. On the single element type this pet-cock is also used for air or oil injection tests.

RELAY TYPE I SE

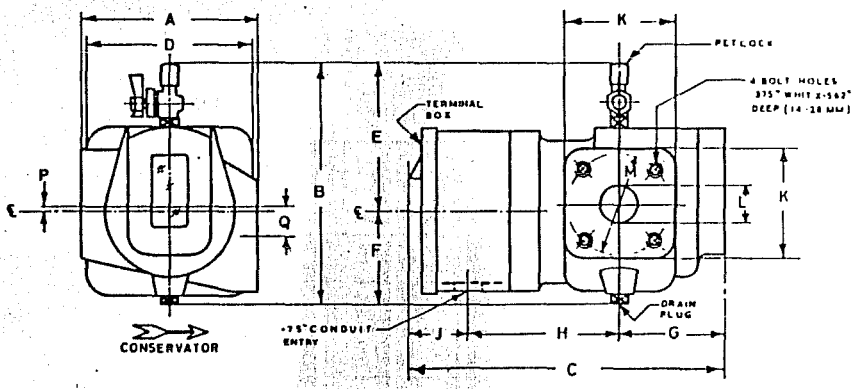

RELAY TYPE I SET

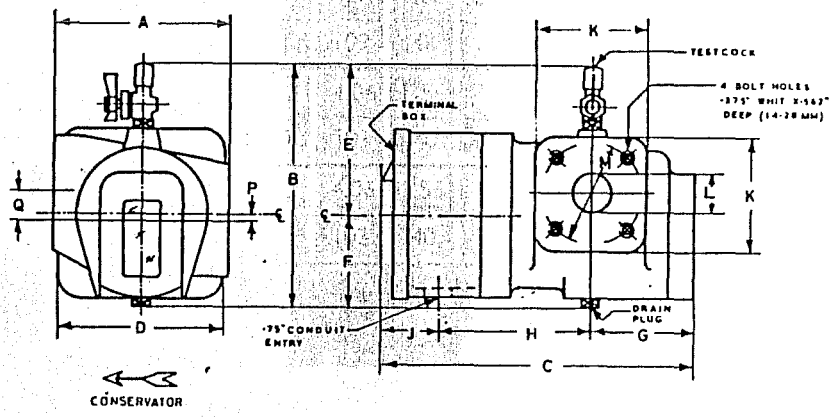

DIMENSIONS IN INCHES AND MILLIMETRES INCHES ABOVE MILLIMETRES BELOW

SIZE and TYPE	A	B	C	D	E	F	G	H	J	K	L	M	N	P	Q
1 DE	5.0	0.63	9.38	5.13	6.5	4.13	3.19	4.31	1.88	3.0	1.0	2.84			
	127	270	238	130	165	105	81	109	48	76	25	72			
2 DE	7.25	0.63	9.38	5.13	6.13	4.25	3.19	4.31	1.88	5.5	2.0	4.33	0.5		
	184	270	238	130	155	104	81	109	48	139	51	110	13		
3 DE	7.25	0.63	9.38	5.13	6.13	4.25	3.19	4.31	1.88	6.31	3.0	5.12	0.5		
	184	270	238	130	155	104	81	109	48	160	76	130	13		
1 SE	4.75	6.63	8.75	4.6	4.13	2.5	3.13	4.06	1.56	3.0	1.0	2.84		0.13	0.85
	120	168	222	114	105	63	79	103	40	76	25	72		3	22
1 SET	4.75	6.63	8.75	4.6	4.13	2.5	3.13	4.06	1.56	3.0	1.0	2.84		0.13	0.85
	120	168	222	114	105	63	79	103	40	76	25	72		3	22

RELAY TYPE I DE

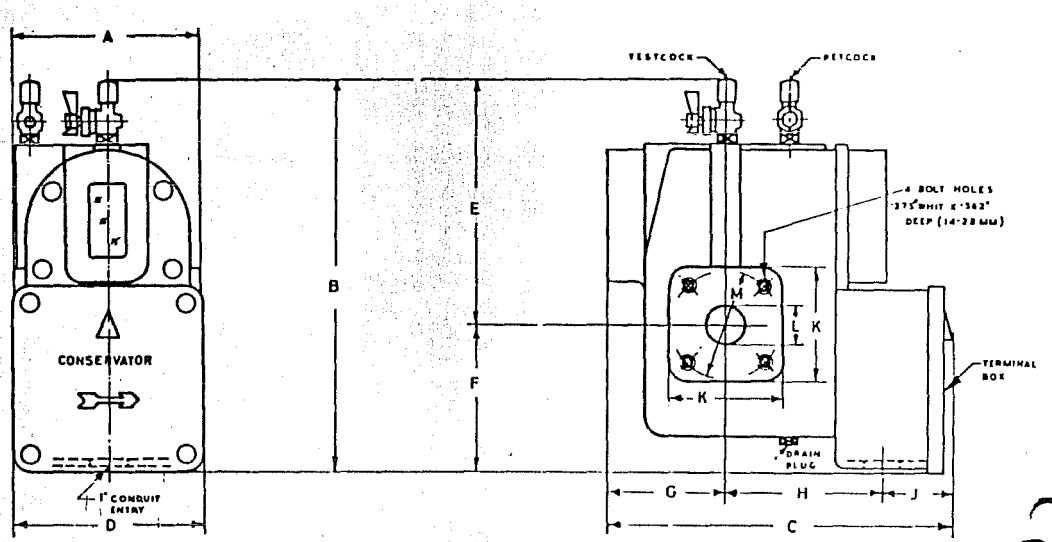

RELAY TYPE 2 DE

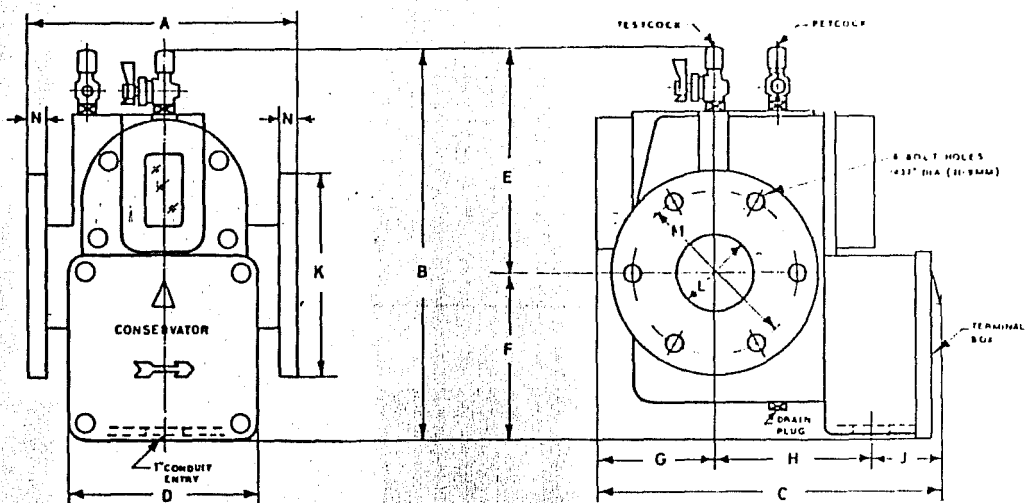

RELAY TYPE 3 DE

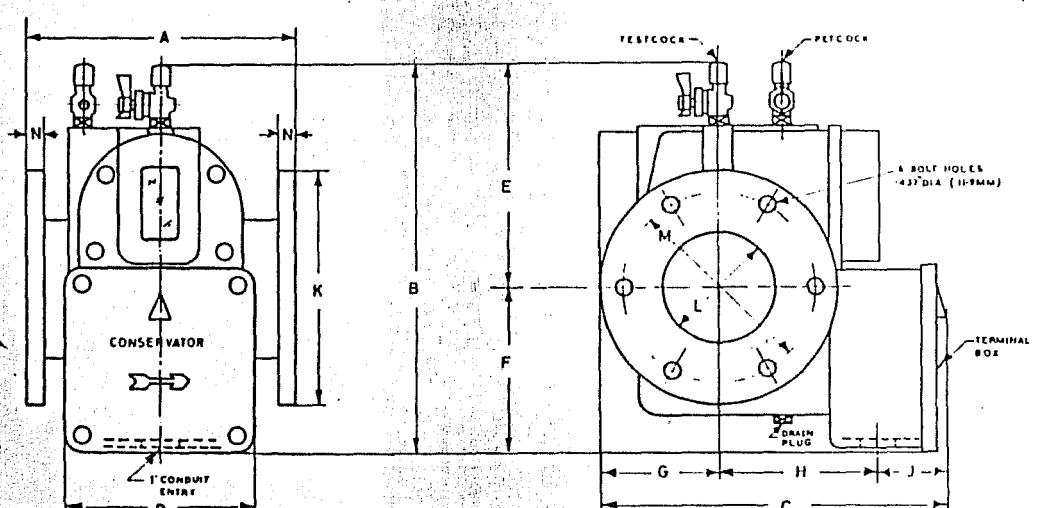

DIAGRAM OF GAS AND OIL OPERATED RELAY (BUCHHOLZ) WITH ALARM CIRCUIT SHOWN OPERATED

THE *Weir* ELECTRICAL INSTRUMENT COMPANY LTD
BRADFORD-ON-AVON · WILTSHIRE · ENGLAND
TELEPHONE BRADFORD-ON-AVON 2044/5

Main Sub

P-112

THE GAS DETECTOR RELAY

(Buchholz Relay)

FOR THE PROTECTION OF CONSERVATOR TYPE POWER TRANSFORMERS

'ENGLISH ELECTRIC'

ENGLISH ELECTRIC COMPANY OF CANADA LIMITED, St. Catharines, Ontario
Halifax, Montreal, Ottawa, Toronto, Fort William, Winnipeg, Calgary, Edmonton, Vancouver

THE GAS DETECTOR RELAY

(Buchholz Relay)

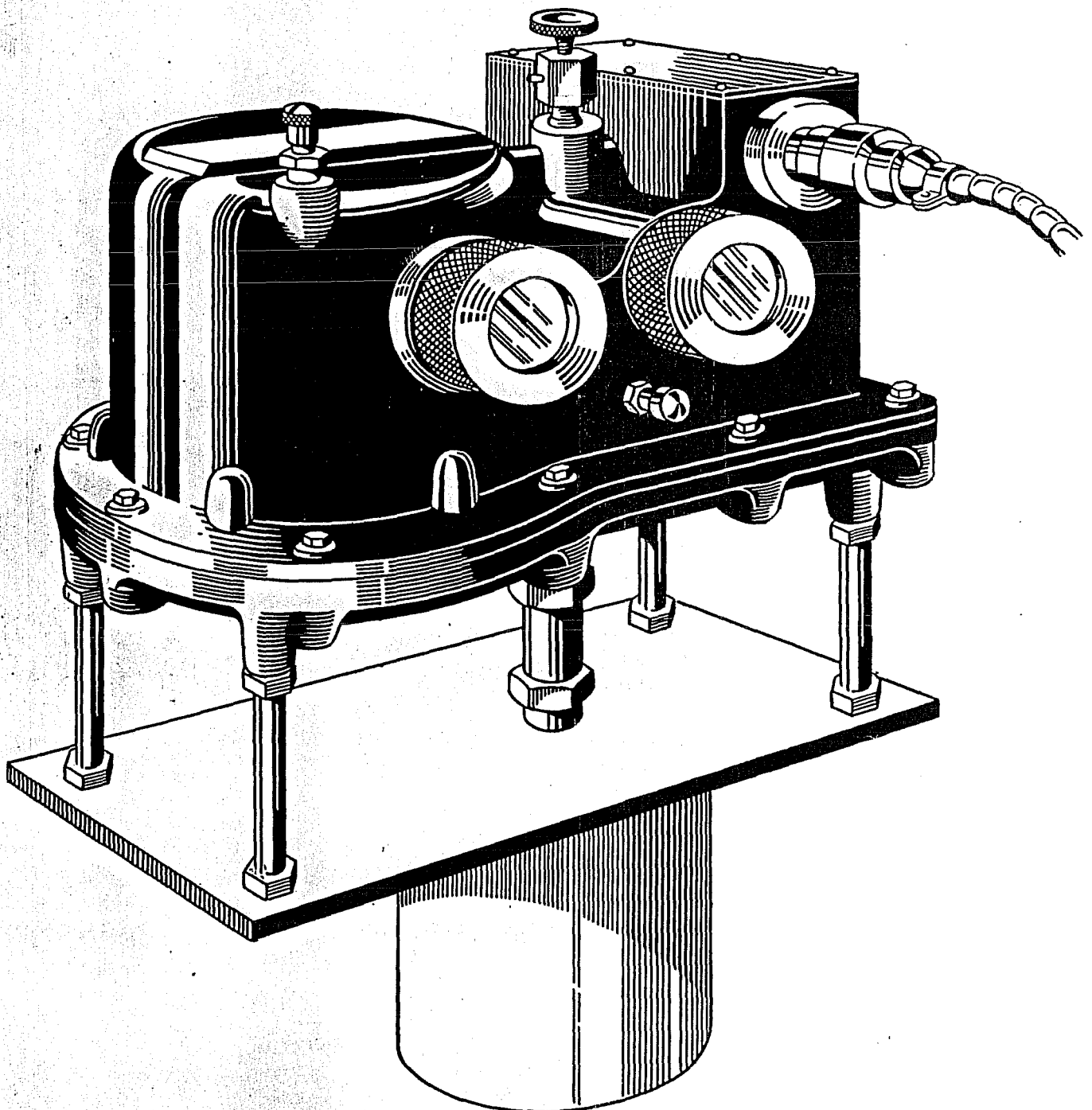

Fig. 1. The Gas Detector Relay.

Introduction

The gas detector relay is a protective device designed to give an indication of faults occurring in an oil-filled conservator-type power transformer.

The gas relay enjoys the unique and all-important characteristic of being able to detect incipient faults prior to primary breakdown — a characteristic lacking in other types of fault-responsive relays.

The gas detector relay has been designed with this purpose in view. The relay consists of two separately enclosed chambers connected to the transformer by a common outlet. The low-pressure chamber, called the gas chamber, is normally oil-filled and so designed that a slow accumulation of gas in it will displace the oil and operate a float on which is mounted a mercury switch. The switch contacts are normally open, but when the float changes position due to displacement of oil from the chamber by the gas, they close. The

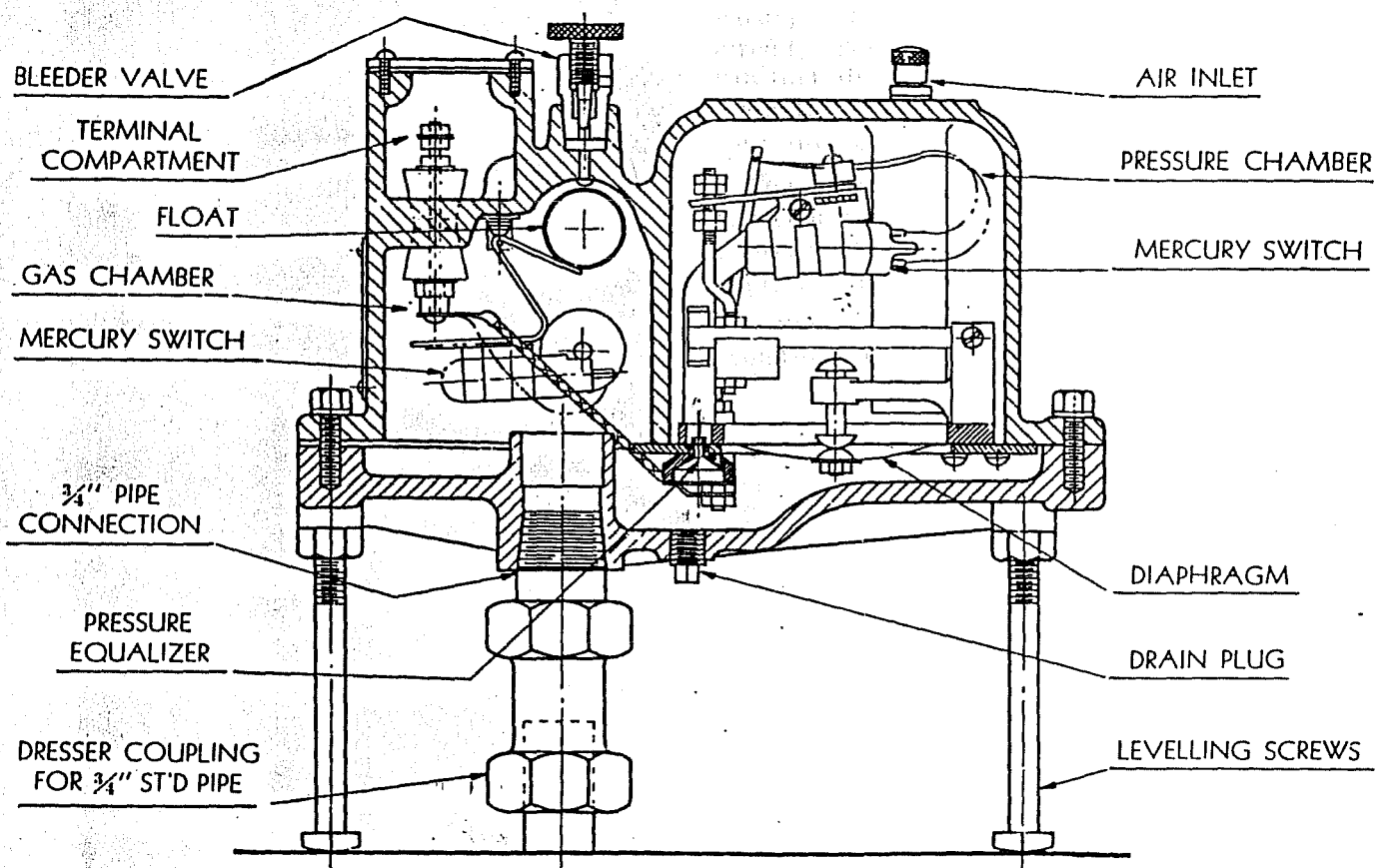

Fig. 2. Cross section of relay.

Examples of such faults are:

1. Defective insulation.
2. Improperly brazed joints causing heating.
3. Incipient tap-changer troubles.
4. Excessive local core losses.

It is a well known fact that a heated metallic body immersed in oil produces a continuous evolution of gas. Therefore, it is an obvious expedient to employ a device which will detect gas formation and give an indication of a fault occurring within the transformer.

closing of the contacts operates an external alarm circuit. This gives warning to the operator who can then disconnect the transformer if necessary while the fault is still in its early stages and before any serious damage occurs.

The pressure chamber is separated from the gas chamber by a flexible diaphragm stretched across the bottom opening. This chamber is normally air-filled.

When a major fault occurs, a very rapid evolution of gas results which causes a sudden

pressure increase in the transformer oil. This pressure increase in the oil is transmitted to the flexible diaphragm which operates a second mercury switch through a mechanical linkage. This switch is so connected that when its contacts close due to pressure on the diaphragm they operate auxiliary protective apparatus, which disconnects the transformer from the line before a serious fault can cause damage.

Description

The gas detector relay consists of the following essential components: (Refer to Figure 2.)

1. A cast metal body with two separate chambers.
2. A cast metal cover.
3. A mercury switch mounted on a float in the gas chamber.

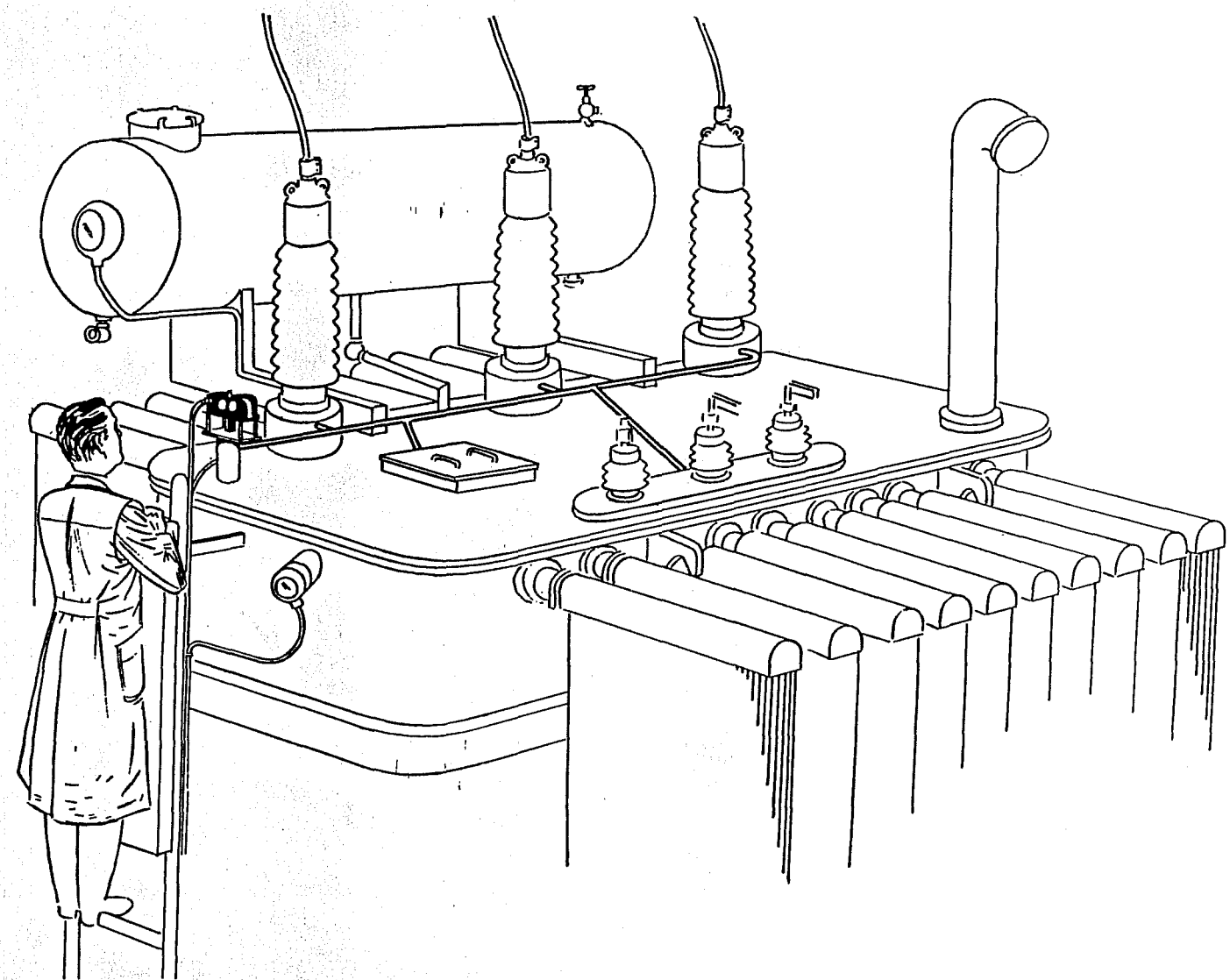

Fig. 3. Position of relay mounted on transformer

The operation of the pressure chamber switch on slow increases in pressure is prevented by a small opening between the two chambers which keeps the pressure equalized and hence prevents movement of the diaphragm.

4. A second mercury switch mounted in the pressure chamber on a metal bar pivoted at one end.
5. One .010″ flexible diaphragm.

6. A weatherproof housing in the body for terminal connections.

7. Leads from the mercury switches to the terminals insulated with interlocking porcelain beads.

8. Needle-valve on gas chamber with flame protective screens in the valve seat.

9. Valves in the gas and pressure chambers for standard automobile pump attachments.

The cover on the bottom has an oil opening with ¾" pipe thread for connecting the relay to the transformer tank. A shut-off valve may be provided in the pipe line from the transformer to the relay to facilitate removal of the relay for servicing without disturbing the operation of the transformer. This valve can also be used to isolate the relay from the tank during vacuum-filling of the transformer.

Each of the chambers is fitted with a circular window, the edges of which are sealed by rubber gaskets on either side of the glass. The windows permit observation of oil level in the chambers.

The float switch mechanism in the gas chamber is suspended in such a position as to be properly located with respect to the oil level in the chamber.

The gas chamber should normally be full of oil. If it is not full then the needle valve on top of the chamber may be opened, allowing the gases to escape. It should be left open until oil runs out and then closed.

The pressure chamber should normally be air-filled. In the event that oil has entered, it may be displaced by forcing air in through the valve on top of the chamber with a pump.

The mercury switches are small enclosed glass vessels containing a pool of mercury and a pair of contacts at one end. The current rating of the switch in the gas chamber (Alarm Contact), is 4.0 amp. on 115 volts and 2.0 amp. on 230 volts. The current rating of the switch in the pressure chamber (Relay Contacts), is 10.0 amp. on 115 volts and 5.0 amp. on 230 volts. (A.C. or D.C.)

The gas detector relay is mounted near the edge of the transformer cover where it can be inspected with the transformer alive. When a ladder is provided on the transformer, the relay is located adjacent to it, as shown in Figure 3.

The air and other gases in the tank generally collect near the centre of the cover above the core and coils. The elevation of the gas chamber is above the highest point on the cover. A pipe with a slight rise conveys the gases to the relay opening and so permits efficient operation of the relay. In the case of larger transformers, where there may be several high points for the gas to collect, a system of pipes is used to conduct the gases from these high points to the relay. Refer to Figure 3.

Two ¾" pipe thread conduit openings are provided in the terminal compartment so that conduit for wiring can be attached.

The relay must be carefully levelled when mounted. This is done by the levelling screws provided and the use of the level surface on top of the body.

The two contacts from the gas chamber are marked "Alarm" and will operate an external alarm circuit. The two contacts from the pressure chamber are marked "Relay" and may be used to control auxiliary relays which will trip the circuit breakers and disconnect the transformer from the line.

After installation and after the transformer has been filled with oil up into the oil conservator, the air trapped in the gas chamber must be allowed to escape through the needle valve on top, while the pressure chamber remains free from oil. As was previously mentioned, the pressure chamber should be free of oil. After complete installation of the relay, the operation should be checked. To check the operation of the "Alarm" circuit contacts, attach a pump to the valve on the side of the gas chamber and slowly force air in. This should cause the float to fall as the oil level recedes. The mercury switch should then close the "Alarm" contacts. Any air so injected is removed through the needle valve on top of the gas chamber, after completion of the test.

The "Relay" contacts may be tested by attaching a pump to the same valve as used to check the "Alarm" contacts. A rapid injection of air should cause the "Relay" contacts to close. The air is to be drawn off by the needle valve as before.

Inspection and Maintenance

The gas detector relay should be inspected at regular intervals. Experience will indicate the necessary frequency of inspections. The operation of the contacts should be checked as explained above.

Whenever the relay has operated to close the "Alarm" circuit, the gas which has accumulated must be allowed to escape by opening the needle valve on top of the gas chamber. Operation of the float in the gas chamber may be observed through the circular window in the side of the chamber. A flashlight will be of considerable aid in observing this.

It is advisable to keep a record of everything which is observed or takes place with the gas detector relay.

Instructions in Event of Operation

The collection of gas in the relay is an indication of an abnormal condition in the transformer. The rate at which, or the volume in which, gas accumulates in the relay is an indication of the magnitude of the fault. The rate or volume of gas accumulation may be observed through the side windows in the relay chambers.

If the relay operates to close either or both of its circuits, the following procedure is suggested:

1. If the relay operates to close the "Alarm" circuit, test the inflammability of the gas with a match or gas analyzer at the needle valve on top of the gas chamber. No hazard is introduced by the use of a match as the flame protective screen, previously mentioned, prevents any flame getting into the gas chamber and causing an explosion.

   If the gas is not inflammable, air has accumulated in the transformer and no serious fault is indicated. Air collection may occur:—

   (a) When a transformer has been recently filled with oil or after oil filtering or conditioning operations. Air may become entrained in the oil during handling or be trapped in the transformer during filling. It may continue to be released for as much as 6 to 8 weeks in such cases. The air should be released from the relay to reset the "Alarm" contacts and the unit left in service.

   (b) In the case of forced oil-cooled transformers, by leakage of air into the oil-cooling equipment. In this case the cause should be located and eliminated.

   If the gas is found to be inflammable, decomposition gases are present indicating trouble developing in the transformer. The unit should be de-energized as soon as convenient so that the fault may be located and cleared.

2. If the relay operates both "Alarm and "Trip" contacts, the transformer should be left de-energized, if automatically disconnected by relay operation, or immediately de-energized, and the gas tested as above. Inflammable gas in such volume indicates a fault which should be located and cleared at once.

Conclusion

The foregoing material describes the operation, installation and maintenance of the gas detector relay as used for transformer protection. It shows the distinct advantages to be had in the protection of equipment by the use of such a device. Properly installed and regularly inspected, it will give excellent service.

INSTALLATION • OPERATION • MAINTENANCE

INSTRUCTIONS

GAS DETECTOR RELAY

For Protection of Expansion Tank — Type Power Transformers

CONTENTS

Introduction and Operation	1	Instructions In Event of Operation.	2
Description	1	The Gas Analyzer for Use with the Relay	2
Mounting and Installation.	2	In Conclusion	2
Inspection and Maintenance	2	Cross Section View	3
		Outline	4

INTRODUCTION AND OPERATION

The gas detector relay is a protective device designed to give an indication of faults occurring in an oil-filled expansion tank type power transformer.

An incipient fault usually results in slow evolution of gas.

Examples of Such Faults are:

1. Defective supporting and insulation structures.
2. Improperly brazed joints causing heating.
3. Incipient tapchanger troubles.

It is a well known fact that a heated metallic body immersed in oil produces a continuous evolution of gas. Therefore, it is an obvious expedient to employ a device which will detect gas formation and give an indication of a fault occurring within the transformer.

The gas detector relay has been designed with this purpose in view. The relay consists of two separately enclosed chambers connected to the transformer by a common outlet. The low pressure chamber, called the gas chamber, is normally oil filled and so designed that a slow accumulation of gas in it will displace the oil and operate a float on which is mounted a mercury switch. The switch contacts are normally open, but when the float changes position due to displacement of oil from the chamber by the gas, they close. The closing of the contacts operates an external alarm circuit. This gives warning to the operator who can then disconnect the transformer if necessary while the fault is still in its early stages and before any serious damage occurs.

The pressure chamber is separated from the gas chamber by a flexible diaphragm stretched across the bottom opening. This chamber is normally air-filled. When a major fault occurs, a very rapid evolution of gas results which generates a sudden pressure increase in the transformer oil. This pressure increase in the oil is transmitted to the flexible diaphragm which operates a second mercury switch through a mechanical linkage. This switch is so connected that when its contacts close due to pressure on the diaphragm they operate auxiliary protective apparatus, which disconnects the transformer from the line before a serious fault can cause damage.

The operation of the pressure chamber switch on slow increases in pressure is prevented by a small opening between the two chambers which keeps the pressures equalized and hence prevents movement of the diaphragm.

DESCRIPTION

The gas detector relay consists of the following essential components: (See Illustrations on pages 3 and 4).

1. A cast metal body with two separate chambers.
2. A cast metal cover.
3. A mercury switch mounted on a float in the gas chamber.
4. A second mercury switch mounted in the pressure chamber on a metal bar pivoted at one end.
5. Two .300" flexible varnished silk diaphragms.
6. A weatherproof housing in the body for connection terminals.
7. Leads from the mercury switches to the terminals insulated with interlocking porcelain beads.
8. Needle valve on gas chamber with flame protective screens in the valve seat.
9. Valves in the gas and pressure chambers for standard automobile pump attachments.

The cover on the bottom has an oil opening with ¾" pipe thread for connecting the relay to the transformer tank. A shut-off valve may be provided in the pipe line from the transformer to the relay to facilitate removal of the relay for servicing without disturbing the operation of the transformer.

Each of the chambers is fitted with a circular window the edges of which are sealed by rubber gaskets on either side of the glass. The windows permit observation of oil level in the chambers.

The float switch mechanism in the gas chamber is suspended in such a position as to be properly located with respect to the oil level in the chamber.

The gas chamber should be normally full of oil. If it is not full then the needle valve on top of the chamber may be opened allowing the gases to escape. It should be left open until oil runs out and then closed.

The pressure chamber should normally be air-filled. In the event that oil has entered, it may be displaced by forcing air in through the valve on top of the chamber with a pump.

The mercury switches are small enclosed glass vessels containing a pool of mercury and a pair of contacts at one end. The current rating of the switch in the gas chamber (Alarm Contacts), is 4.0 amps on 115 volts and 2.0 amps on 230 volts. The current rating of the switch in the pressure chamber (Relay Contacts), is 10.0 amps on 115 volts and 5.0 amps on 230 volts.

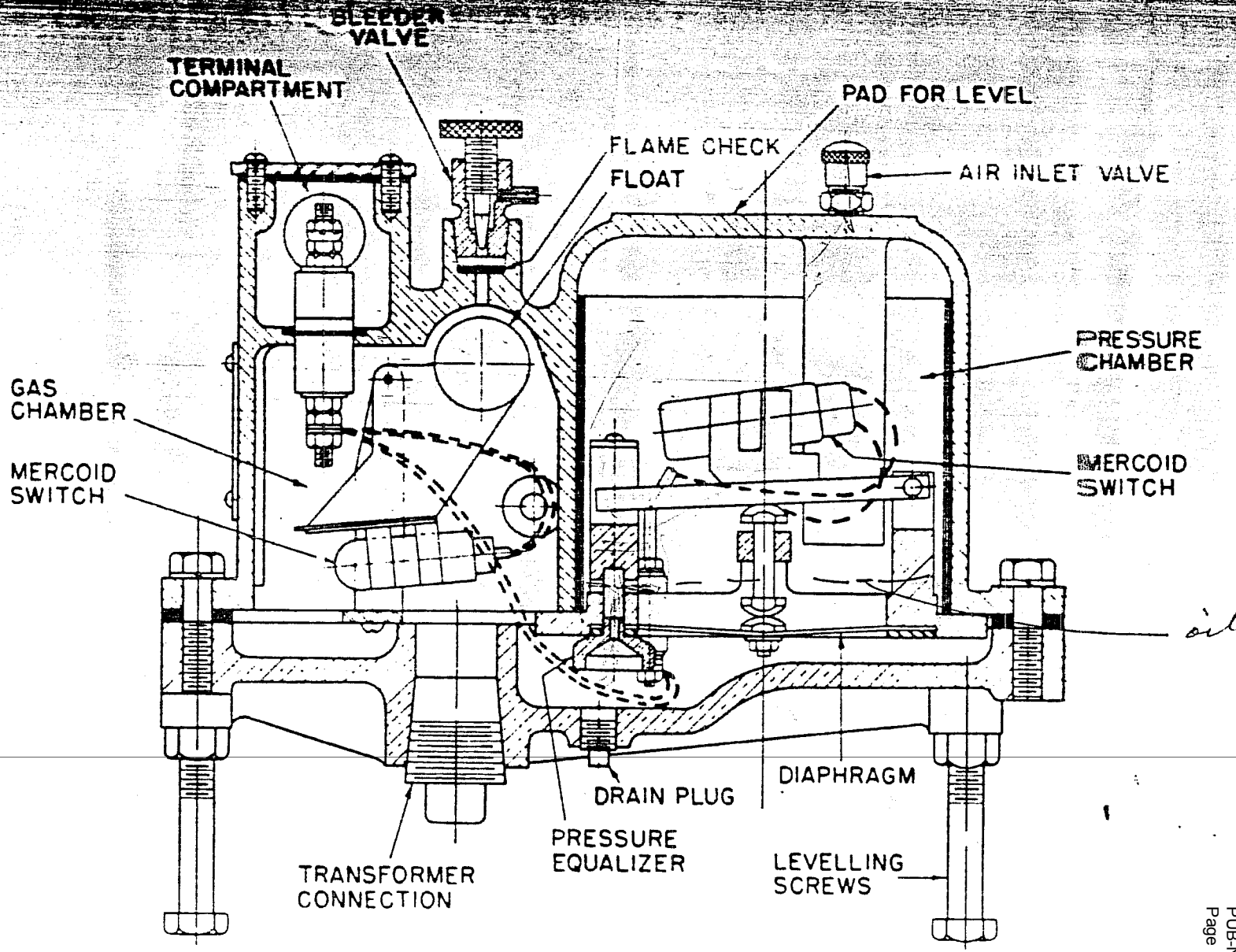

Gas Detector Relay Cross Section View

GAS DETECTOR RELAY

I. L. H.-46-750

MOUNTING AND INSTALLATION

The gas detector relay should theoretically be located at the highest point of the transformer tank in order to collect the gas as soon as it forms. However, the relay may be mounted on the edge of the cover so that it can be readily serviced with the transformer energized.

The air and other gases in the tank generally collect near the centre of the cover above the core and coils. A pipe with a slight rise is used to convey the gases to the relay opening and so permit efficient operation of the relay.

Two ¾" pipe thread conduit openings are provided in the terminal compartment so that conduit for wiring can be attached.

The relay must be carefully levelled when mounted. This is done by the levelling screws provided and the use of the level surface on top of the body.

The two contacts from the gas chamber are marked "Alarm" and will operate an external alarm circuit. The two contacts from the pressure chamber are marked "Relay" and may be used to control auxiliary relays which will trip the circuit breakers and disconnect the transformer from the line.

After installation and after the transformer has been filled with oil up into the expansion tank, the air trapped in the gas chamber must be allowed to escape through the needle valve on top. As was previously mentioned, the pressure chamber should be free of oil. After complete installation of the relay, the operation should be checked. To check operation of the "Alarm" circuit contacts attach a pump to the valve on the side of the gas chamber and slowly force in air. This should cause the float to fall as the oil level decreases. The mercury switch should then close the "Alarm" contacts. Any air so injected is removed through the needle valve on top of the gas chamber.

The "Relay" contacts may be tested by attaching a pump to the same valve as used to check the "Alarm" contacts. A rapid injection of air should cause the "Relay" contacts to close. The air is to be drawn off by the needle valve as before.

INSPECTION AND MAINTENANCE

The gas detector relay should be inspected at regular intervals. Experience will indicate the necessary frequency of inspections. The operation of the contacts should be checked as explained above.

Whenever the relay has operated to close the "Alarm" circuit the gas which has accumulated must be allowed to escape by opening the needle valve on top of the gas chamber. Operation of the float in the gas chamber may be observed through the circular window in the side of the chamber. A flashlight will be of considerable aid in observing this.

It is advisable to keep a record of everything which is observed or takes place with the gas detector relay.

INSTRUCTIONS IN EVENT OF OPERATIONS

When the relay begins to fill with gas, it indicates a fault within the transformer, the rate at which the gas accumulates being an indication of the magnitude of the fault. The rate of gas accumulation may be observed through the side windows on the relay chambers.

Attention should be given to any unusual noises in the transformer tank especially after the relay has operated. If the relay operates to close either or both of its circuits the following procedure is suggested:

1. If the relay closes the "Alarm" circuit, test the inflammability of the gas with a match or gas analyzer at the needle valve on top of the gas chamber. The flame protective screens previously mentioned prevent the flame from getting into the gas chamber and causing an explosion. If the gas is not inflammable air has accumulated in the transformer and indicates no trouble in so far as electrical faults are concerned. If the "Alarm" circuit is closed again, the cause may be repeated accumulation of air such as may be trapped in the transformer while being filled with oil. In the case of force-oil cooled transformers, air may be entering through leakage into the oil-cooling equipment and the cause should be eliminated. If tests with the gas analyzer or with a flame show the gases to be inflammable, decomposition gases are present and the transformer should be disconnected until the fault has been located and cleared.

2. If the relay operates both "Alarm" and "Relay" circuits at the same time switch in a reserve transformer. Investigation as to the inflammability of the gas should be carried out as described above.

THE GAS ANALYZER FOR USE WITH THE RELAY

A gas analyzer for use with the gas detector relay is a desirable auxiliary instrument. This permits analysis of the gases present in the relay with regard to their inflammability. Such a device is known as a vapotester and is available from Canadian manufacturers.

The vapotester is an easily portable and rugged instrument for testing the inflammability of gas. Briefly, it consists of a wheatstone bridge circuit of which two arms are composed of interchangeable platinum filaments. One filament is sealed in and the other so arranged that air or gas may be drawn through it. A combustible gas-air mixture will ignite on the surface of the exposed element, increase its resistance and upset the balance of the bridge. The dial of the meter is calibrated in terms of the lower explosive limit. The instrument is extremely sensitive and in tests has proved very reliable.

Analysis of Gas Samples Taken Under Service Conditions

Gas released from oil by heated joint in large transformers:

Hydrogen	– 6%
Unsaturated Hydro-carbons	– 4%
Methane (CH)	– 9%
Ethane (C^2H^6)	– 4%
Oxygen	– 9%
Nitrogen	– 68%

Note: This gas is decidedly inflammable and when mixed with air, may constitute an explosion hazard.

After a transformer has been installed, or after filtering or re-conditioning operations have been carried out, there is usually a considerable amount of entrapped air in the oil. Until such time as this air has been released there will be many operations of the gas detector relay. Such air may require several weeks to be entirely released from the oil.

IN CONCLUSION

The foregoing material describes the operation, installation and maintenance of the gas detector relay as used for transformer protection. This shows the distinct advantages in protection of equipment to be had by the use of such a device. Properly installed and regularly inspected it will give excellent service.

GAS DETECTOR RELAY

I. L. H. 46-750-1

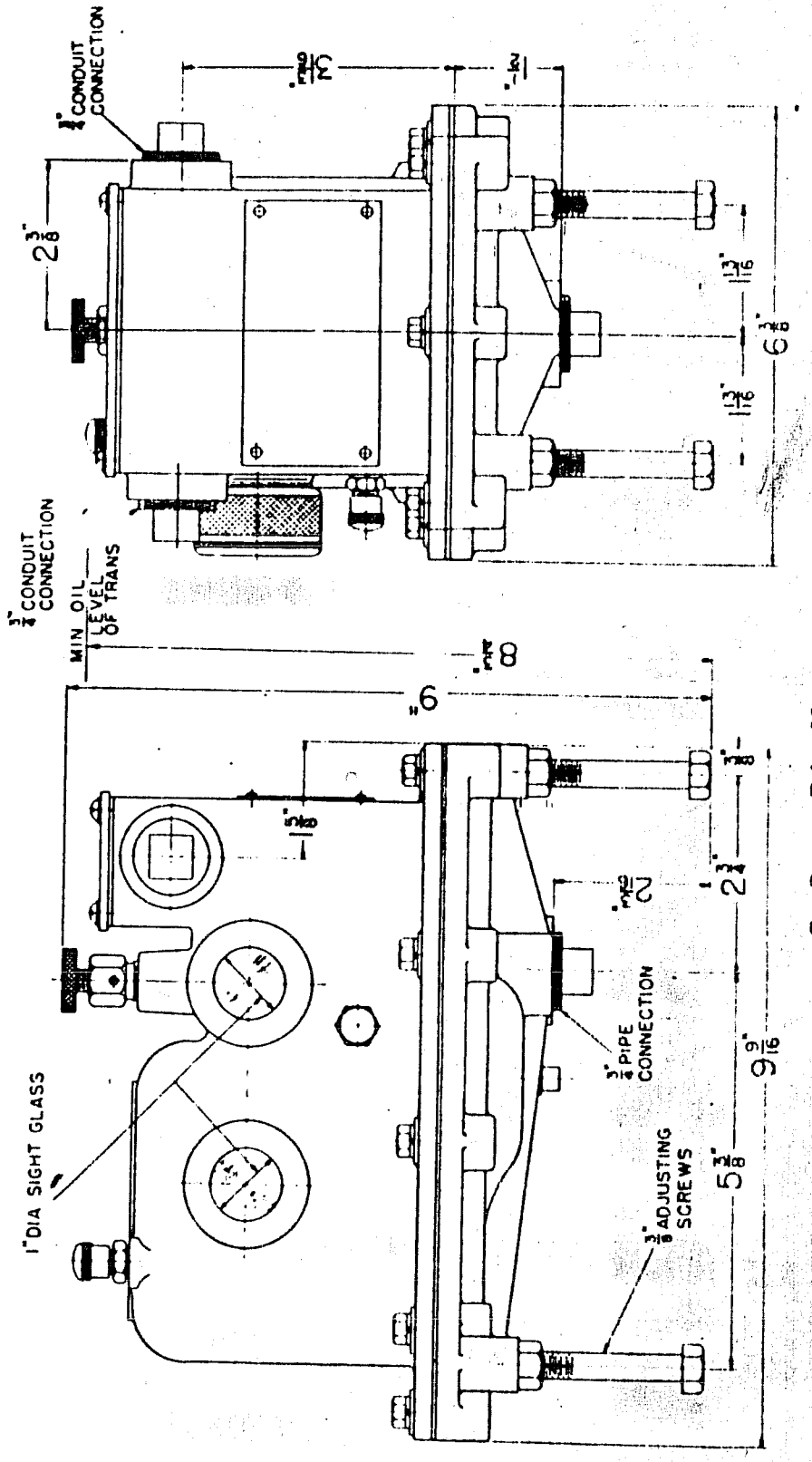

Gas Detector Relay Mounting Dimensions

Gas Detector Relay
Model 12 Style #316A093H02

I.L.H-46-750-1C

The gas detector relay is designed to give an early indication of faults occurring in oil-filled conservator type transformers. These faults fall into two general classes:-

(1) Those faults of an incipient or minor nature resulting in a slow evolution of gasses. This evolution of gas may result from local heating, defective insulating structures, improperly brazed joints, loose contacts, grounds, short circuited turns, opening or interruption of a phase current, burn out of core iron, release of air from oil or leakage of air into transformer.

(2) Those faults of a major nature resulting in a sudden increase in pressure. Major faults are usually caused by flash over between parts.

The relay will detect either of these classes of faults.

DESCRIPTION

The relay consists of two sections:-

A. A Gas Accumulation Chamber at the top, consisting of an oil chamber with a gas escape needle valve and a flame protective screen mounted in a protective recess at the top of the casting. In the oil chamber is a float which operates a 3" magnetic oil gauge with an alarm switch.

B. A Pressure Chamber at the bottom, which consists of two parts. The rear part is an oil chamber which is connected to the transformer by a 3/4" pipe at the back of the relay and to the gas accumulation chamber above. On the side is a test valve for operation checking. The rear part is separated by a sensitive brass bellows from the front part.

The front part is an air chamber. It contains a bellows stop to prevent over-travel, a flexible brass diaphragm, and a microswitch. Movement of the bellows compresses the air behind the diaphragm and actuates the microswitch which is mounted on a bracket over a small disc fastened to the diaphragm. The sensitivity of this pressure chamber is fixed by a small by-pass assembly which is fastened to the diaphragm support. This by-pass controls the rate of air escaping past the diaphragm from the bellows side to the front of the diaphragm. The sensitivity is approximately one-tenth of a pound per square inch per second rate of pressure rise. The microswitch is adjusted to close when 1.5 pounds per square inch pressure is applied with either little or no air by-passing the diaphragm.

All the air in this front section is sealed by a large silicone rubber diaphragm located behind the inspection cover. This rubber diaphragm is shaped to equalize the internal to external pressure for ambient temperature and pressure changes.

INSTALLATION AND OPERATION

Mount the relay at the highest point on the transformer cover with the gas escape needle valve below the minimum level of the oil in the conservator. The design allows a maximum oil head of five feet over the top of the relay.

Locate the relay either at the edge of the transformer cover or within six inches of the edge of the transformer cover clear of live parts. The natural frequency of the mounting must not be less than ninety cycles per second.

The connections should allow all the gas formed in the transformer to gather in the Gas Accumulation Chamber. Connect with a short length of 3/4" pipe, four feet maximum length, with, if necessary, additional 1/2" pipes from the highest parts of the transformer tank with a positive slope to the relay. See Figure 2 for example of a recommended connection. To prevent damage to the bellows through shock in transporting the relay, a removable shipping plug, sponge rubber faced, is installed in the factory. In order to connect the relay, remove the 3/4" pipe plug and remove the shipping plug located immediately behind the pipe plug. The shipping plug must be removed prior to making connections to the relay. The shipping plug must also be replaced whenever the relay is to be transported any distance, either mounted on the transformer or not.

SWITCH RATINGS

The snap action switches in the relay will break the following loads:-

Switch	Current Rating Amperes	A.C. Voltage 60 cycles	D.C. Voltage	Remarks
Alarm	5	115 to 230		
	.25		120	Non inductive
	.20		240	Non inductive
	.043		120	Inductive
	.028		240	Inductive
Trip	15	125 to 250		
	.5		115	Non inductive
	.25		230	Non inductive
	.05		115	Inductive
	.03		230	Inductive

TABLE 1.

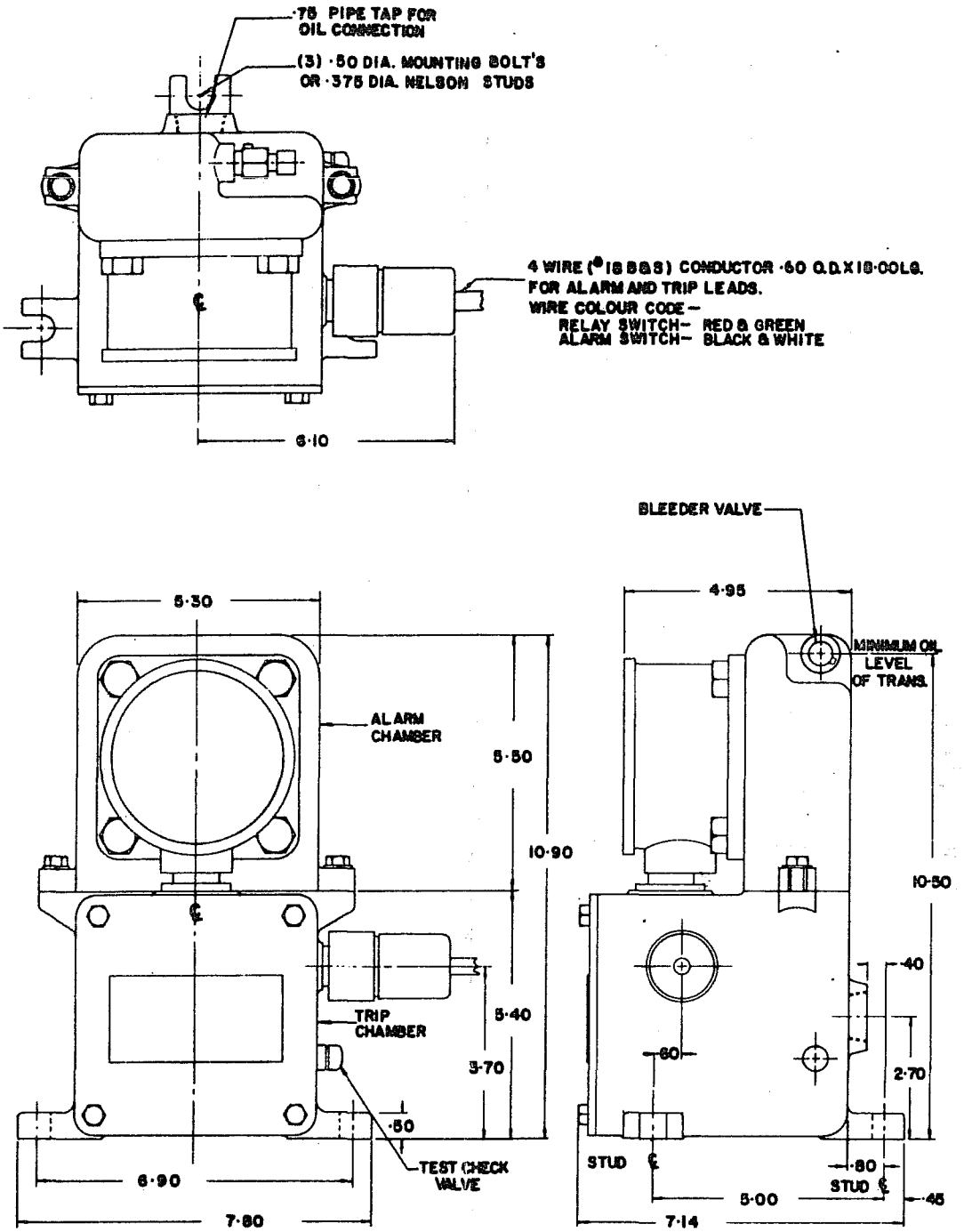

RELAY OUTLINE

Figure 1

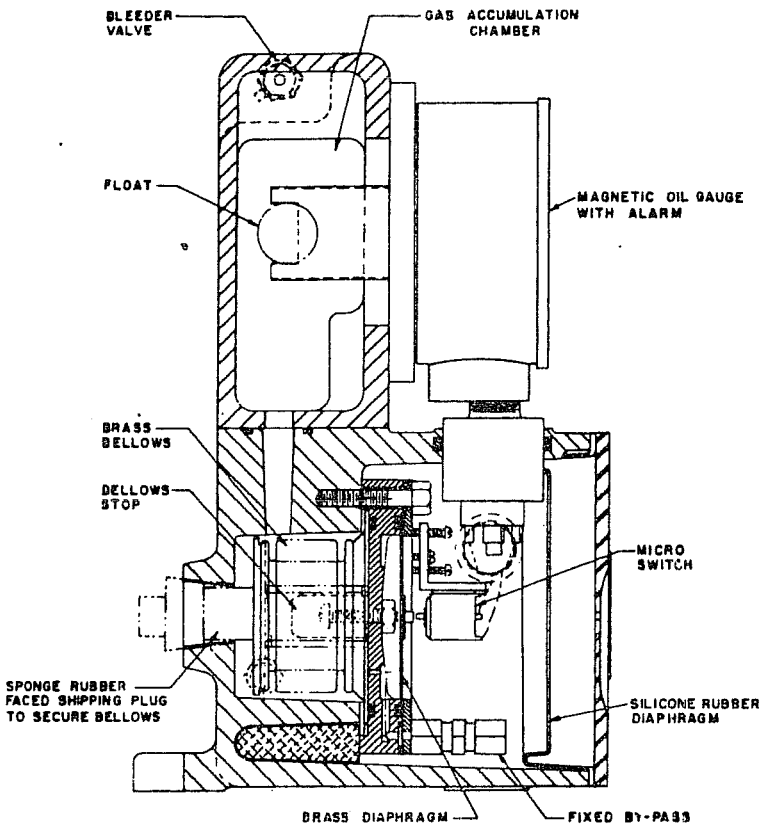

RELAY CROSS SECTION

Fig. 3

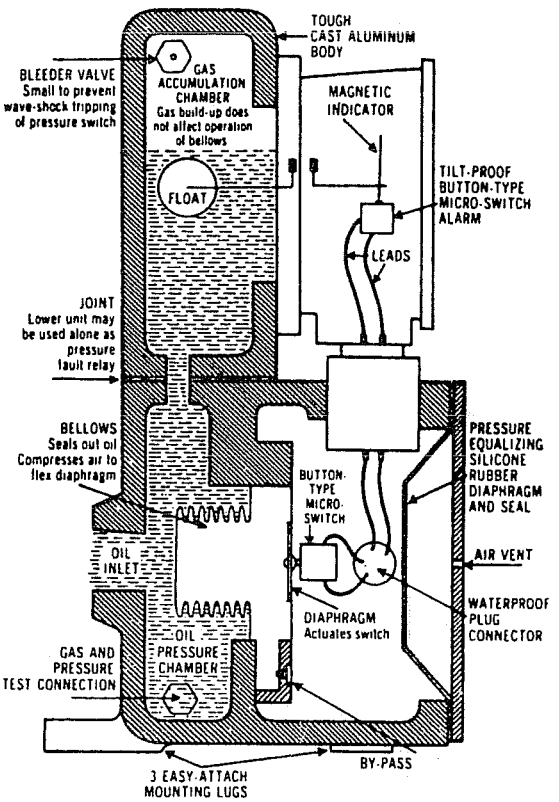

SIMPLIFIED RELAY CROSS SECTION

Fig. 4

INSTRUCTIONS

CANADIAN GENERAL ELECTRIC COMPANY LIMITED

THE GAS DETECTOR RELAY
MODEL II
FOR PROTECTION OF CONSERVATOR TYPE POWER TRANSFORMERS

INTRODUCTION

The gas detector relay is designed to give an early indication of faults occurring in oil-filled conservator type transformers. These faults fall into two general classes:-

(1) Those faults of an incipient or minor nature resulting in a slow evolution of gasses. This evolution of gas may result from local heating, defective insulating structures, improperly brazed joints, loose contacts, grounds, short circuited turns, opening or interruption of a phase current, burn out of core iron, release of air from oil or leakage of air into transformer.

(2) Those faults of a major nature resulting in a sudden increase in pressure. Major faults are usually caused by flash-over between parts.

The relay will detect either of these classes of faults.

DESCRIPTION

The relay consists of two sections:-

A. A Gas Accumulation Chamber at the top, consisting of an oil chamber with a gas escape needle valve and a flame protective screen mounted in a protective recess at the top of the casting. In the oil chamber is a float which operates a 3" magnetic oil gauge with an alarm switch.

B. A Pressure Chamber at the bottom, which consists of two parts. At the rear is an oil chamber which is connected to the transformer by a 3/4" pipe entering the back of the relay and thence above to the gas accumulation chamber. At the base is the test valve for making operation checks. This rear section is separated by a sensitive brass bellows from the front part.

The front section contains a bellows stop to prevent over-travel, then a flexible diaphragm mounted across the air side of the bellows. The movement of the diaphragm actuates a microswitch which is mounted over a small disc fastened to the diaphragm. The sensitivity of this pressure chamber is controlled by a small leaf spring valve which is fastened to the diaphragm support. This by-pass valve controls the rate of air escaping past the diaphragm from the bellows side to the front of the diaphragm. Normal setting, approximately one third of a pound per square inch per second rate of pressure rise, that is required to actuate the microswitch, is indicated by a punch mark on the dial.

All the air in this front section is sealed by a large silicone rubber diaphragm located behind the inspection cover. This rubber diaphragm is shaped to equalize the internal to external pressure for ambient temperature and pressure changes.

INSTALLATION AND OPERATION

Mount the relay at the highest point on the transformer cover with the gas escape needle valve below the minimum level of the oil in the conservator. The design allows a maximum oil head of five feet over the top of the relay.

Locate the relay either at/or within six inches of the edge of the transformer cover clear of live parts. The natural frequency of the mounting should not be less than ninety cycles per second.

The connections should allow all the gas formed in the transformer to gather in the Gas Accumulation Chamber. Connect with a short length of 3/4" pipe, four feet maximum length, with, if necessary, additional 1/2" pipes from the highest parts of the transformer tank with a positive slope to the relay. See Figure 2 for example of a recommended connection. To prevent damage to the bellows through shock in transporting the relay a removable shipping plug, (tubular in nature) is installed in the factory. In order to connect the relay, remove the 3/4" pipe plug and remove the shipping plug located immediately behind the pipe plug. The shipping plug must be removed prior to making connections to the relay. The shipping plug must also be replaced whenever the relay is to be transported any distance, either mounted on the transformer or not.

These instructions do not purport to cover all details or variations in equipment nor to provide for every possible contingency to be met in connection with installation, operation or maintenance. Should further information be desired or should particular problems arise which are not covered sufficiently for the purchaser's purposes: the matter should be referred to the Canadian General Electric Company Limited.

SWITCH RATINGS

The snap action switches in the relay will break the following loads:-

Switch	Current Rating Amperes	A.C. Voltage 60 cycles	D.C. Voltage	Remarks
Alarm	5	115 to 230		
	.25		120	Non inductive
	.20		240	Non inductive
	.043		120	Inductive
	.028		240	Inductive
Trip	15	125 to 250		
	.5		115	Non inductive
	.25		230	Non inductive
	.05		115	Inductive
	.03		230	Inductive

TABLE 1.

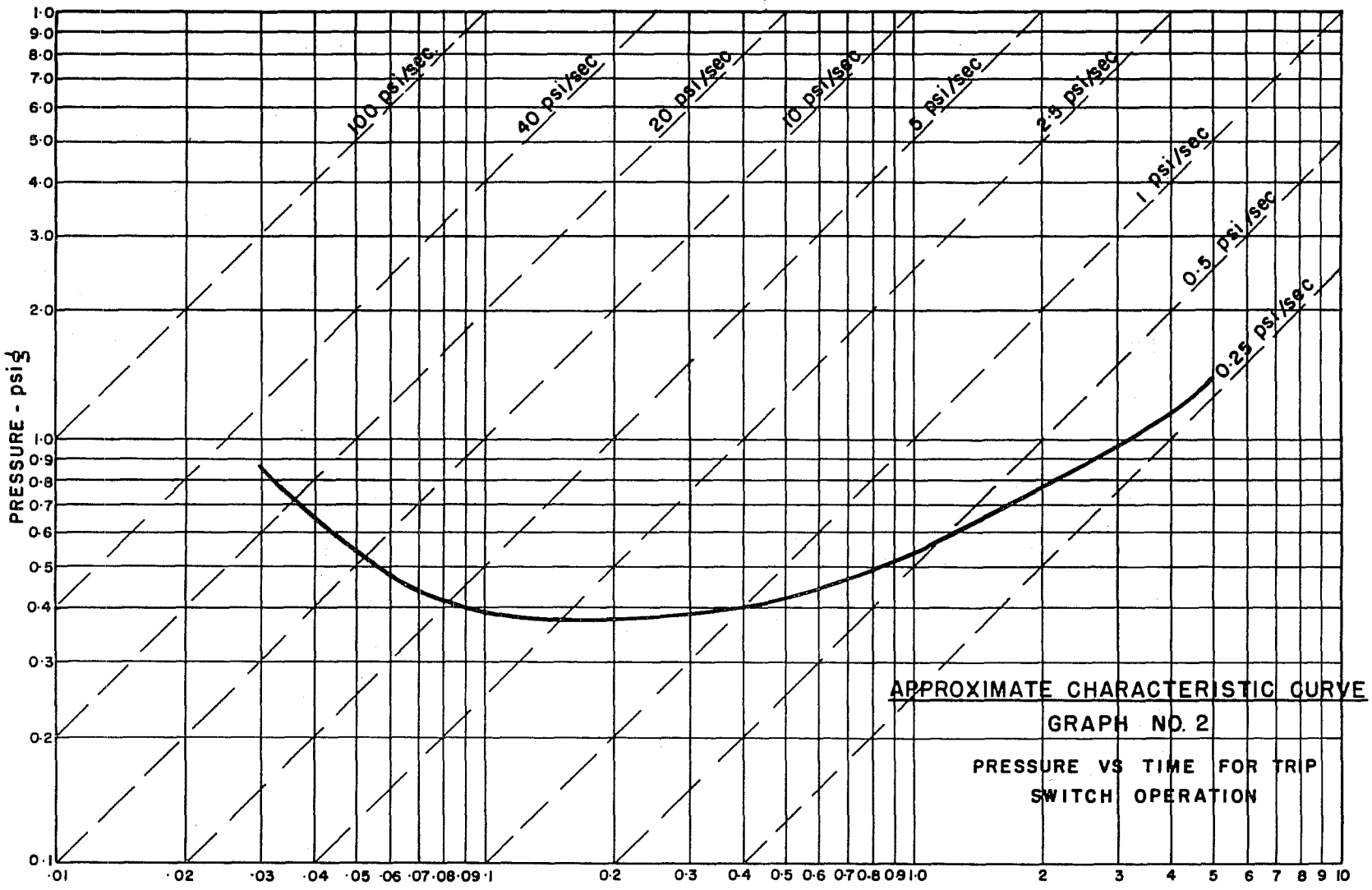

APPROXIMATE CHARACTERISTIC CURVE

GRAPH NO. 2

PRESSURE VS TIME FOR TRIP SWITCH OPERATION

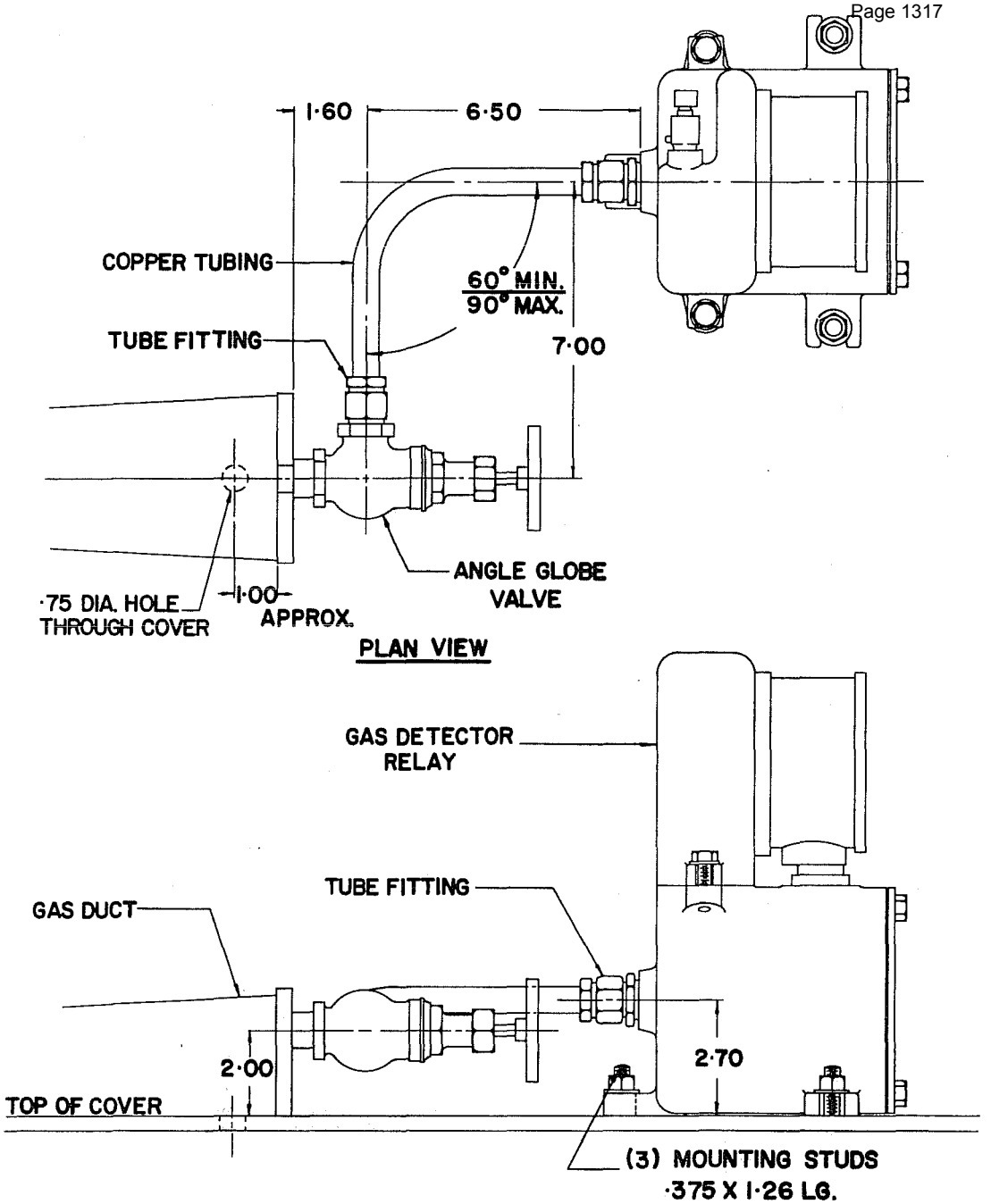

RELAY MOUNTING

Figure 2

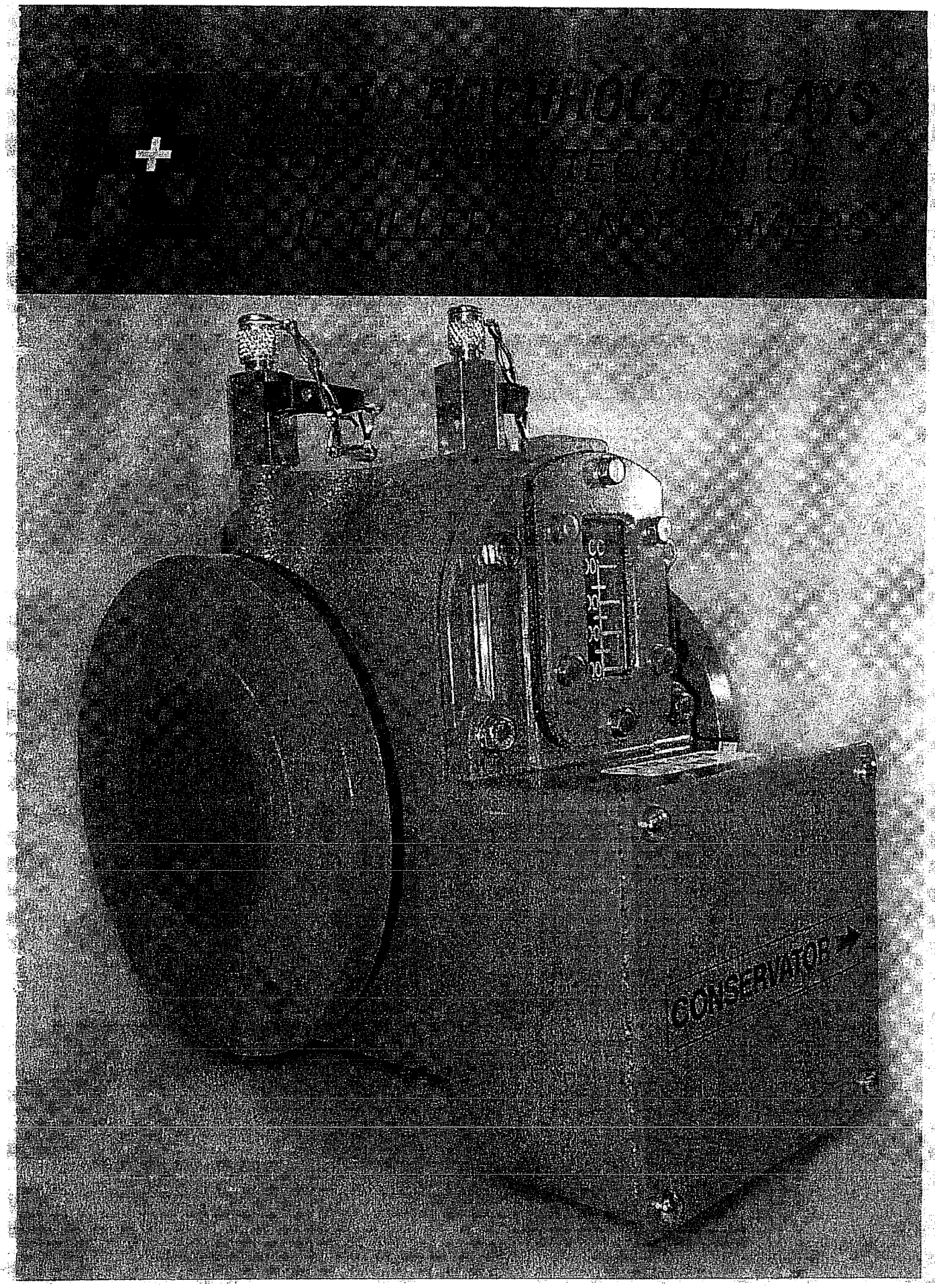
CONSERVATOR

GENERAL INTRODUCTION

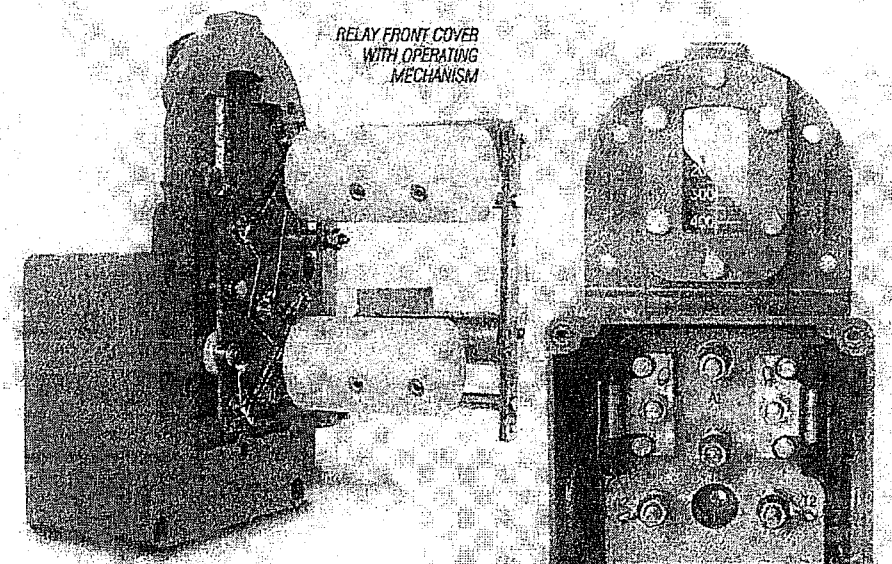

RELAY FRONT COVER WITH OPERATING MECHANISM

RELAY BODY SHOWING TEST JET

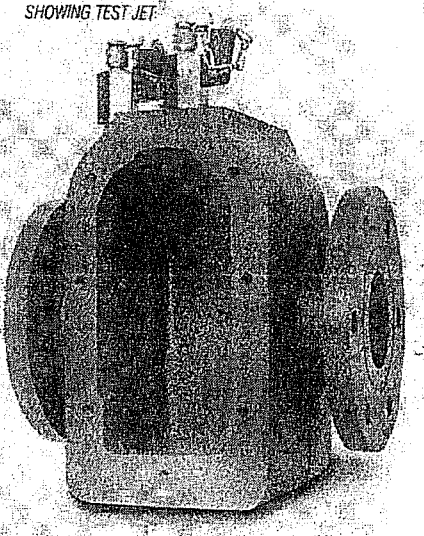

RELAY SHOWING TERMINAL BOX

APPLICATIONS

Most faults in an oil filled Transformer are accompanied by the generation of gas. By using a suitable relay the formation of this gas can be used as a warning of a developing fault.

Double element relays can be used for detecting minor or major faults. The alarm element will operate after a specified volume of gas has collected to give an alarm indication. Examples of incipient faults are:

a. Broken-down core bolt insulation
b. Shorted laminations
c. Bad contacts
d. Overheating of part of the windings

The alarm element will also operate in the event of oil leakage or if air enters the cooling system.

The trip element will be operated by an oil surge in the event of more serious faults such as:

a. Earth faults
b. Winding short circuits
c. Puncture of bushings
d. Short circuits between phases

The trip element will also operate if a rapid loss of oil occurs.

MOUNTING POSITION

The relay should be mounted in the connecting pipe between the transformer and the conservator tank. This pipe should be as long and as straight as possible, and must be arranged to slope upwards, towards the conservator, at an angle within the limits of 3 to 7 degrees to the horizontal.

There should be a straight run on the transformer side of the relay of at lease five times the internal diameter of the pipe, and at least three times this diameter on the conservator side. A machined surface is provided on the relay body for the purpose of testing the mounting of the relay, both in the inclined direction and at right angles to the pipe where it should be horizontal.

CONNECTIONS

The terminal boxes on double element relays are normally drilled and tapped M20 x 1.5mm for bottom entry by conduit or cable gland. Side entries and alternative thread sizes can be supplied for most types upon request. Alarm and tripping circuit connections are made to OBA terminal stems, in the terminal box, and secured by OBA nuts and washers. The maximum recommended torque value should not be exceeded when making connections.

NOTE: If the relay is repainted on site, care should be taken that the vent/drain hole in the terminal box is not obstructed.

TESTING ON SITE

Double element relays are provided with a separate ballvalve to enable the injection of compressed air to be used for testing on site.

To test the operation of the alarm element, air from an air bottle should be admitted slowly so that the alarm element falls gradually until the switch operates.

To test the trip element, the valve controlling the bottle is opened quickly so that the air rushes in, impinges on the flap and depresses it, operating the switch. The pressure required is dependant upon the equipment used. To facilitate on-site testing a portable foot pump providing air which has been passed through a desiccant is available.

NOTE: It should be appreciated that this test is no substitute for a proper works calibration of the relay.

ROUTINE TESTING

Relays are individually calibrated, in accordance with BEBS T2 (1966). Values are recorded for loss of oil/gas collection to operate the alarm switch and steady oil flow to operate the trip switch. The unit is also observed to ensure the trip switch operates due to a complete loss of oil.

Assembled relays are pressure tested with transformer oil at 1.4 bar for 6 hours. Electrical circuits are flash tested at 2000 volts r.m.s. and the insulation resistance measured at 500 Volts is not less than 10 Megohms in air.

Although specifically designed to function with transformer oil according to BS148, successful trials have also been conducted utilising Silicone coolant.

MERCURY SWITCH TYPE
MARK 10 BUCHHOLZ RELAYS

CONSTRUCTION AND METHOD OF OPERATION

The relay consists of a lightweight container fitted with two pivoted elements. It is situated in the pipe line between the transformer and the conservator tank, so that under normal conditions it is full of oil. The operating force relies upon the principle that when a body is immersed in a liquid it appears to lose weight. There are no floats or open containers which can be punctured or collect sludge, with consequent loss of buoyancy.

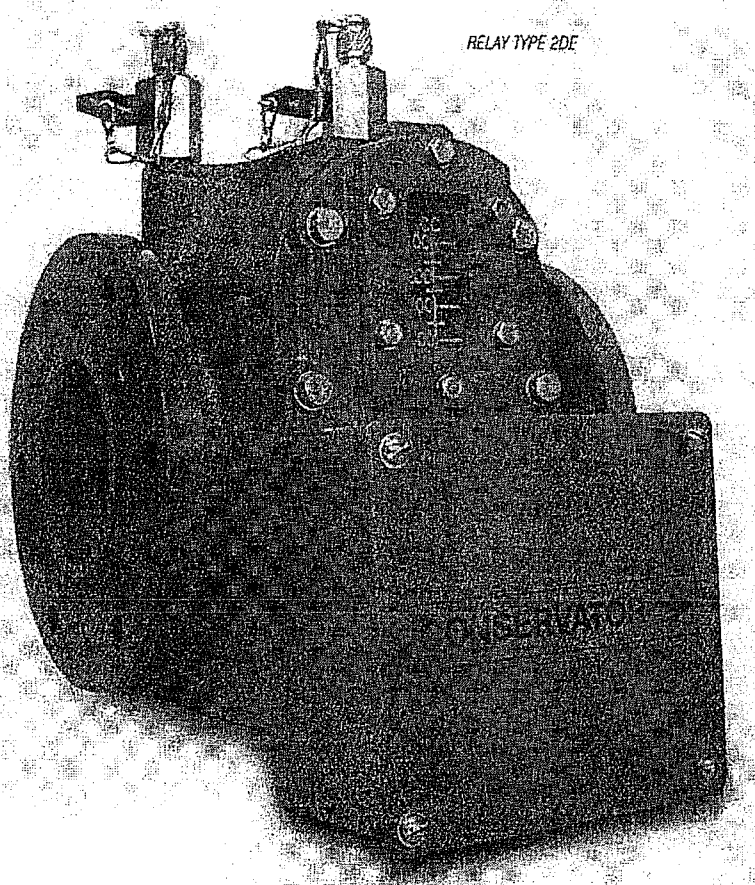

RELAY TYPE 2DE

MERCURY SWITCHES

Mercury switches are employed of a special design to prevent mal-operation due to excessive transformer vibration. A sample relay of this type has been submitted to a continuous 3000 hour vibratory type test. During this test the relay was vibrated to an amplitude of 0.01 in. peak to peak at a frequency of 100 Hz. The mercury switches were connected to sensitive detecting equipment and no mal-operations were recorded.

The mercury switches are spring mounted within the switch cylinders and protected from possible damage. Alarm and trip circuit mercury switches will make break and carry continuously 2 Amps at 250 Volts A.C or D.C. They will also make and carry for 0.5 sec. 10 Amps at 250 Volts A.C. or D.C.

PRINCIPAL OF OPERATION

The operating mechanism consists of a solid non-metallic cylinder containing the mercury switch, counterbalanced by a smaller solid metal cylinder. Both cylinders are jointed and free to rotate about the same axis, the amount of rotation being controlled by stops. When the relay is empty of oil, the weight of the switch cylinder predominates and the switch system rests against the bottom stop, the mercury switch being in the closed circuit position.

When the relay is full of oil, both cylinders appear to lose weight. Due to the different densities, the switch cylinder appears to lose enough weight to enable the weight of the counterbalance cylinder to predominate and rotate the whole system until it reaches the top stop, with the mercury switch in the open position.

"ALARM" OPERATION

When a slight or incipient fault occurs within the transformer, the gas generated will collect in the top of the relay housing. As gas collects, the oil level will fall and increasing amounts of the alarm switch will appear above the oil level. This results in gradual restoration of the apparent lost weight, until the weight of the switch cylinder predominates. The element rotates as the oil level continues to fall and eventually the alarm switch operates.

TRIP OPERATION

When a serious fault occurs, the generation of the gas is so rapid that an oil surge is set up through the relay. This oil flow will impinge upon the flap fitted to the trip element causing it to rotate about its axis and so bring the mercury switch to the closed position, which in turn operates the tripping devices.

In the event of serious oil loss from the transformer, both alarm and trip elements operate in turn, in the manner previously described for gas collection. The oil level in the double element relay can be monitored against a graduated scale on the windows both sides.

REED SWITCH TYPE
MARK 10 BUCHHOLZ RELAYS

For use in situations subject to SEISMIC DISTURBANCES and mining activities such as BLASTING.

Shock and vibration acting along the tube of a conventional mercury switch can cause the mercury within it to move and momentarily bridge the switch electrodes, even though the switch is tilted in the open position. This is considered to be a mal-operation of the relay in that it is caused by external influences and not by a fault within the transformer. Consequently where relays are to be used in situations as described above a more suitable alternative to the usual mercury switch is required. Magnet operated reed switches were selected specifically for this purpose and this choice is supported by the following type tests which were successfully withstood.

ABILITY TO WITHSTAND POWER FREQUENCY VIBRATIONS

The device, having its contact electronically monitored by means of an instrument capable of registering and recording a contact closure of 1ms duration, shall be subjected to a sinusoidal vibration having a frequency of 100 Hz and an amplitude of 0.25 ± 0.05 mm peak to peak (thus a maximum acceleration of 6g) in the plane of movement of the contact making arrangement for a period of 1000 hours, during which there shall be no mal-operation of the contacts.

ABILITY TO WITHSTAND VIBRATION DUE TO EARTH TREMORS AND BLASTING

Immediately before, and again immediately after, the vibration test, the stability of the device and its contacts under earth tremor conditions shall be proved by subjecting the device, whilst being vibrated under the conditions of the vibration test above, to further vibrations superimposed on the 100Hz vibration and supplied separately in each of the three perpendicular axes one of which should be in the same plane as the 100Hz vibration.

These vibrations shall have a constant peak to peak amplitude of 2.5mm and shall be carried by a continuous slow sweep over the range of 0.1 to 33Hz (at which frequency the maximum acceleration will be 5.5g) in order to search out resonances.

The appearance of these relays is the same as mercury switch types but they are distinguished from them by the symbol /V/O or /Vc/o following their type markings. The letter V (for vibration) indicates that the relay contains reed switches, the letter O that the contacts are normally open and the symbol c/o for change-over contact reeds. Thus a type 2DE/VO signifies a 2" (Pipe Size) Double Element Relay, with normally open Reed Switches (normally means with the relay full of oil).

OPERATION

In the double element relay, collection of gas causes the oil level within the relay to fall. This in turn causes the upper element to rotate on its pivots, bringing the magnet it carries into a position where it operates the alarm switch.

An oil surge through the relay will cause the lower element to rotate about its pivots and bring its magnet into a position so as to operate the tripping switch.

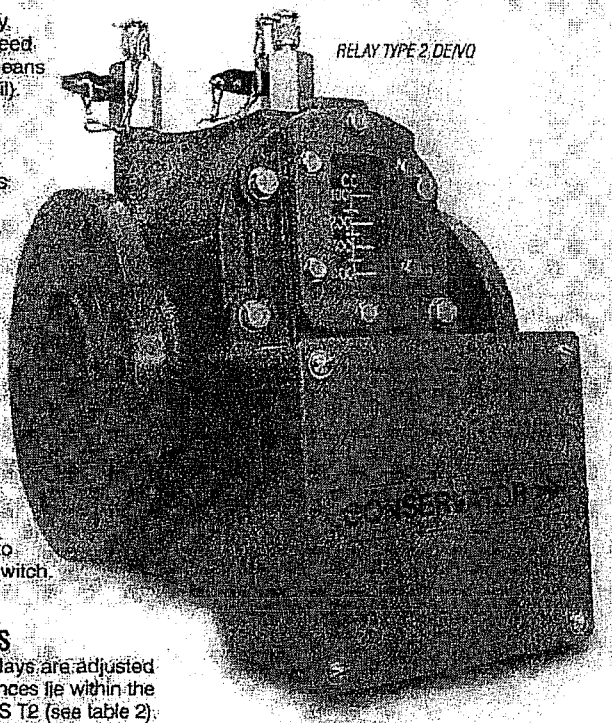

OPERATIONAL CHARACTERISTICS

All double element relays are adjusted so that their performances lie within the limits specified in BEBS T2 (see table 2). Alternative values may be available upon specific request. These switches have Rhodium contacts, located midway along the length of their glass tubes. The tubes contain an atmosphere of Nitrogen.

Connected in series with each reed switch, and mounted within the terminal box, is an inductor of approximately 30 microhenries and 0.04ohm. These inductors are intended to protect the reed switch contacts from the effects of capacitive loads, such as are imposed by long leads or pilot cables, and must not be removed from relays in service.

Protection of reed switch contacts against the effect of inductive loads, such as are imposed by Tripping Relays is achieved by means of a diode wired across each load. This diode must be rated with forward current at least as high as the steady load current and connected observing polarity so as to absorb the back e.m.f. A protection unit, designated D2, fitted with suitably rated diodes for this purpose in available.

TABLE 1: REED SWITCH DATA

	Single Contact	Change-over Contact
Type	Gunther Type 1526	Gunther Type 1621
Switch Capacity	Max. 250 VA/W	Max. 60 W/80VA
Switching Current	Max. 5A	Max. 2A
Switching Voltage (0-60Hz)	Max. 250 V	Max. 220V
Initial Contact Resistance	Max. 100 milliohms	Max. 100 milliohms
Breakdown Voltage	Min. 600 v r.m.s.	500/400 V d.c.
Resonance Frequency	900Hz	-
Shock Resistance	Max. 50g (duration 11ms)	Max. 50g (duration 11ms)
Vibration Resistance	Max. 35g (50-500Hz)	Max. 35g (50-500Hz)
Temperature range	–55°C to +150°C	–40°C to +50°C

WARNING: It is essential, for the satisfactory operation of these relays that their contacts be protected against the effects of capacitive and inductive loads as described.

SINGLE ELEMENT AND TAP-CHANGER TYPES

MARK 10 BUCHHOLZ RELAYS

Single element type relays are available for 1" bore size, designated 1 SE, which operate indiscriminately for Gas or Oil collection and are suitable for small oil filled transformer, capacitor and potential transformer protection. A special range of single element relays are also available for Tap Changer type transformers which operate for a surge condition or loss of oil only and allow gas, normally produced during tap-changing operations, to pass freely. The single element relay has only one operating element and operates in a similar manner to that described for the double element types.

A special open frame unit designated R575/1 suitable for fitting inside the header tank of tapchangers which operate due to gas collection, oil loss and surge conditions, is available.

A protective diode unit type D1 can also be provided to protect Reed switches employed in single element units.

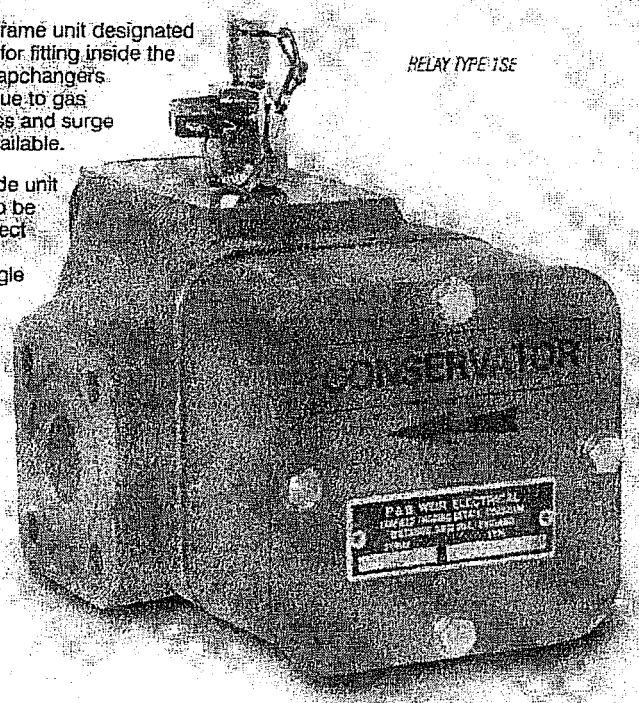

RELAY TYPE 1SE

DESIGNATION INDEX	
DE	Double Element Relay
SE	Single Element Relay
V	Unit fitted with reed switches
O	Switches normally open
K	Switches normally closed
AKTO	Alarm switch normally closed and Trip switch normally open
c/o	Change-over state reed switches fitted
HF	High calibration units
ML	Mechanical latched element
3 DE/HF2	Special high calibration relay to meet the requirements of C.E.G.B. Standard 993412 TPS4/25

TABLE 2: OPERATIONAL CHARACTERISTICS FOR P & B WEIR BUCHHOLZ RELAYS

Model Designation	Steady Oil Flow (mm/sec) to Operate Trip Element Switch		Oil Level (cc) to operate Alarm Element Switch @ 5° Inclination		For Equipment Containing
	Pipe angle 1° Not less than	Pipe angle 9° Not more than	min	max	
1 SE	650	900	140	200	
1 SE/VO	650	900	120	160	
1 SE/VK/ML	900	1050	150	230	
1 SET 1 SET/K 1 SET/VO	450	600	N/A		
1 SET/HF	650	750	N/A		
1 DE 1 DE/K 1 DE/AKTO 1 DE/VO 1 DE/Vc/o	1000	1300	200	300	up to 1000 litres 1000 KVA
2 DE 2 DE/K 2 DE/AKTO 2 DE/VO 2 DE/Vc/o	1100	1400	200	300	1001/10,000 litres 1001/10,000 kVA
3 DE 3 DE/K 3 DE/AKTO 3 DE/VO 3 DE/Vc/o	1200	1600	200	300	10,000/50,000 litres 10,001 kVA/99 MVA
3 DE/HF2 3 DE/HF2/VO	1900	2500	250	350	50,000 litres plus 100 MVA and above

Other values may be available upon specific request.

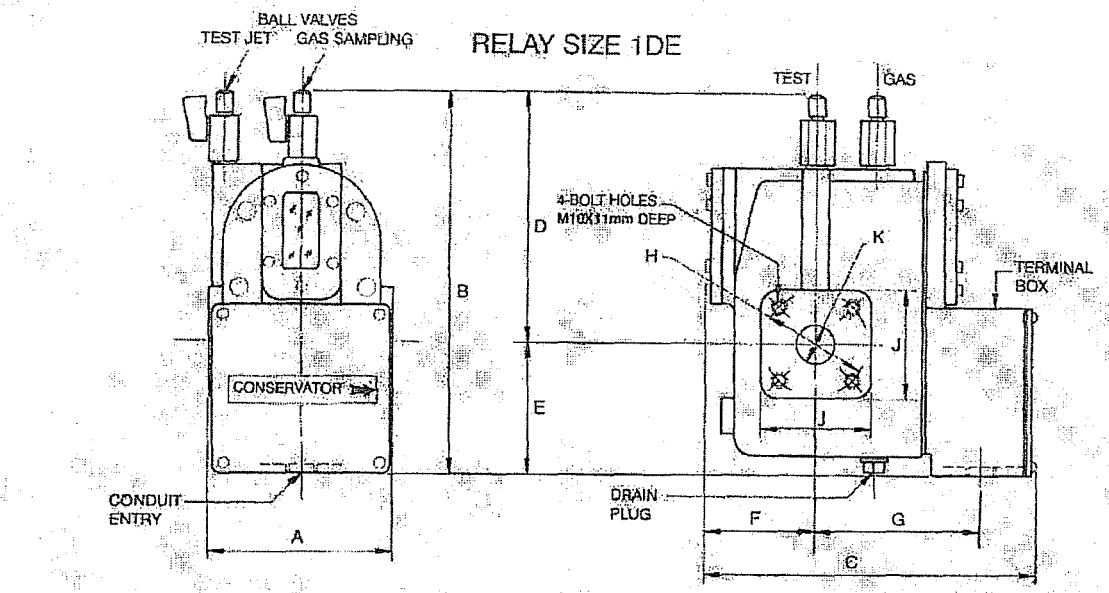
BALL VALVES
TEST JET
GAS SAMPLING
RELAY SIZE 1DE
TEST
GAS
4-BOLT HOLES
M10X31mm DEEP
H
K
TERMINAL
BOX
D
B
J
E
CONSERVATOR
CONDUIT
ENTRY
DRAIN
PLUG
A
F
G
C

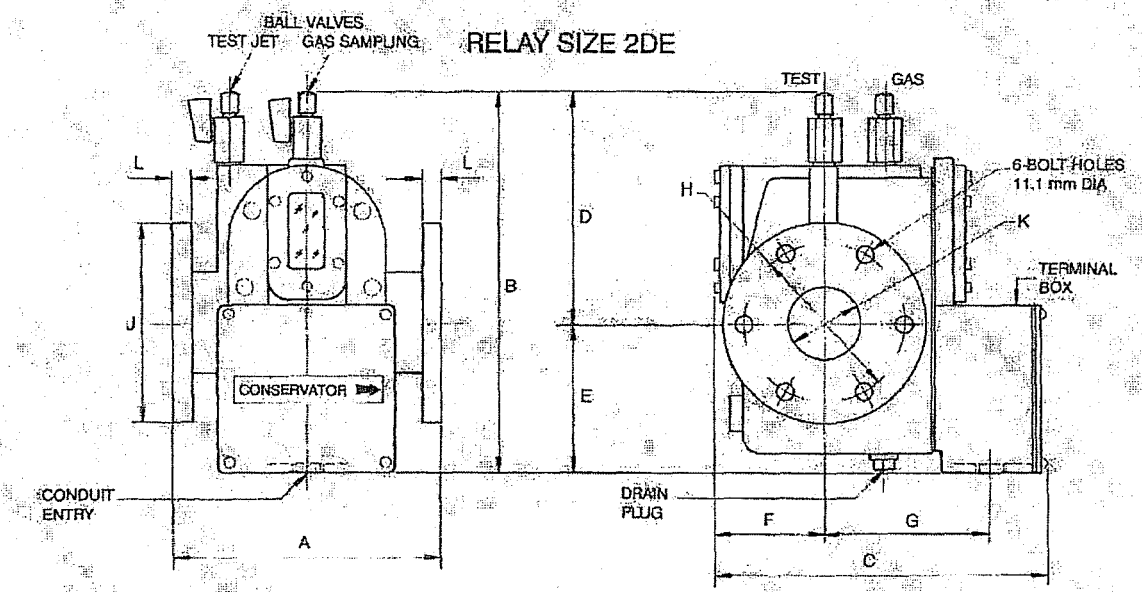
BALL VALVES
TEST JET
GAS SAMPLING
RELAY SIZE 2DE
TEST
GAS
L
L
6-BOLT HOLES
11.1 mm DIA
H
K
D
TERMINAL
BOX
B
J
E
CONSERVATOR
CONDUIT
ENTRY
DRAIN
PLUG
A
F
G
C

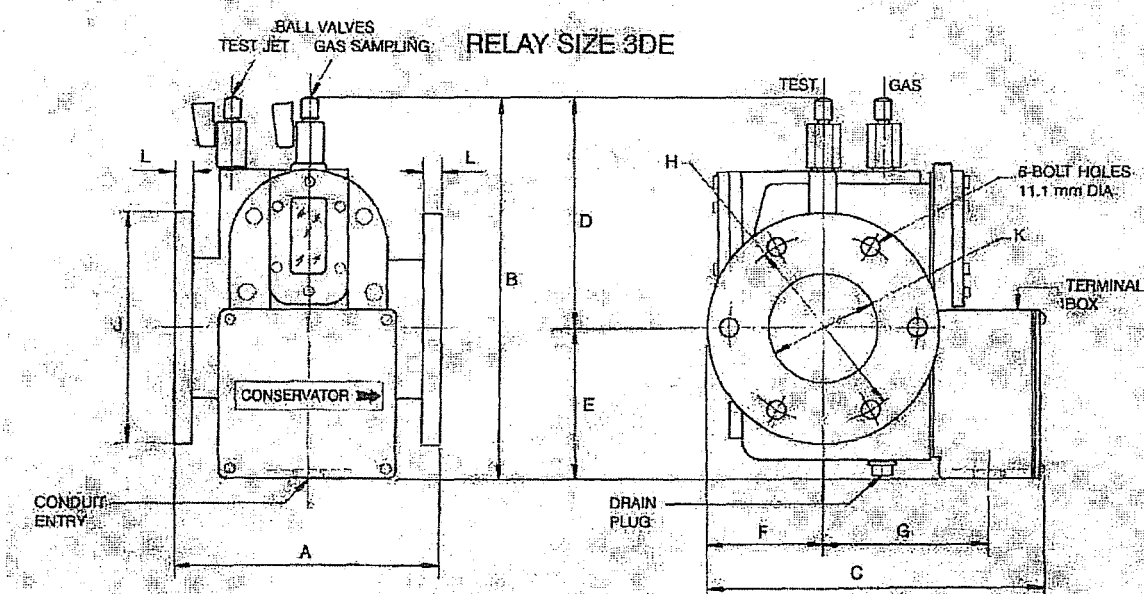
BALL VALVES
TEST JET
GAS SAMPLING
RELAY SIZE 3DE
TEST
GAS
L
L
H
6-BOLT HOLES
11.1 mm DIA
K
D
TERMINAL
BOX
B
J
E
CONSERVATOR
CONDUIT
ENTRY
DRAIN
PLUG
A
F
G
C

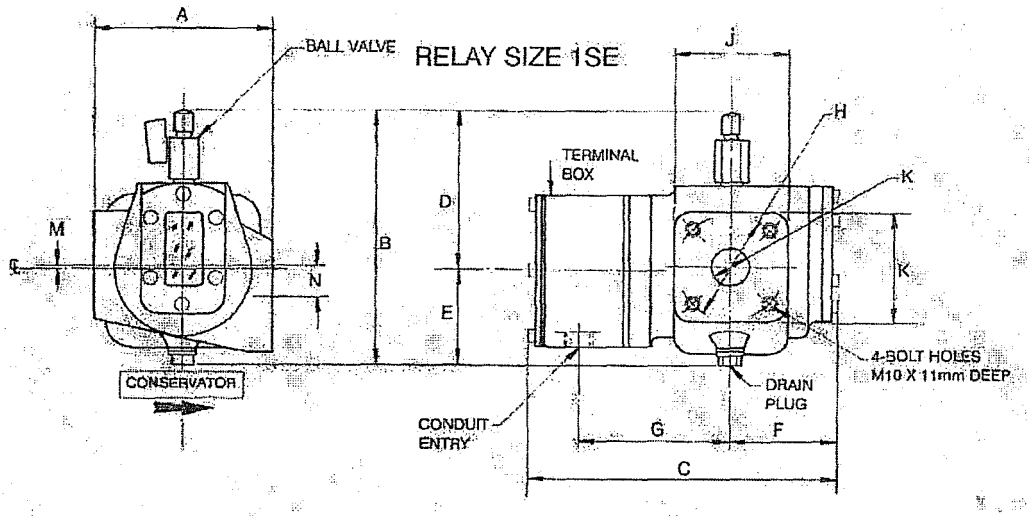

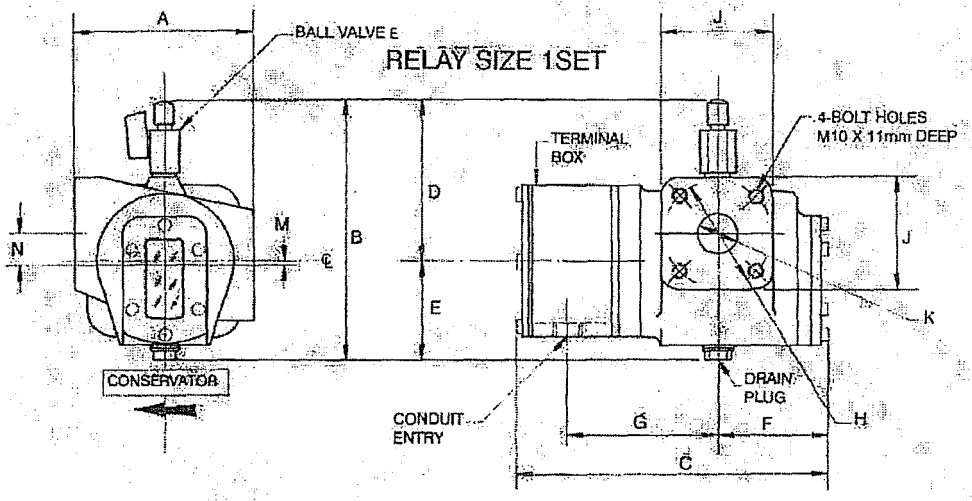

TABLE 3: DIMENSIONS

Size and Type	DIMEN'S.	A	B	C	D	E	F	G	H	J	K	L	M	N
1DE	mm	127	269	232	171	98	76	114	72	76	25	-	-	-
	in.	5.0	10.6	9.13	6.75	3.9	3.0	4.5	2.84	3.0	1.0	-	-	-
2DE	mm	184	269	232	158	111	76	114	110	139	51	13	-	-
	in.	7.25	10.6	9.13	6.2	4.37	3.0	4.5	4.33	5.5	2.0	0.5	-	-
3DE	mm	184	269	234	158	111	80	114	130	160	76	13	-	-
	in.	7.25	10.6	9.21	6.2	4.37	3.15	4.5	5.12	6.31	3.0	0.5	-	-
1SE	mm	120	174	212	110	64	76	103	72	76	25	-	3.0	22
	in.	4.75	6.85	8.35	4.33	2.52	3.0	4.0	2.84	3.0	1.0	-	0.13	0.85
1SET	mm	120	174	212	104	70	76	103	72	76	25	-	3.0	22
	in.	4.75	6.85	8.35	4.1	2.75	3.0	4.0	2.84	3.0	1.0	-	0.13	0.85

MANUFACTURING BUCHHOLZ RELAYS FOR 50 YEARS

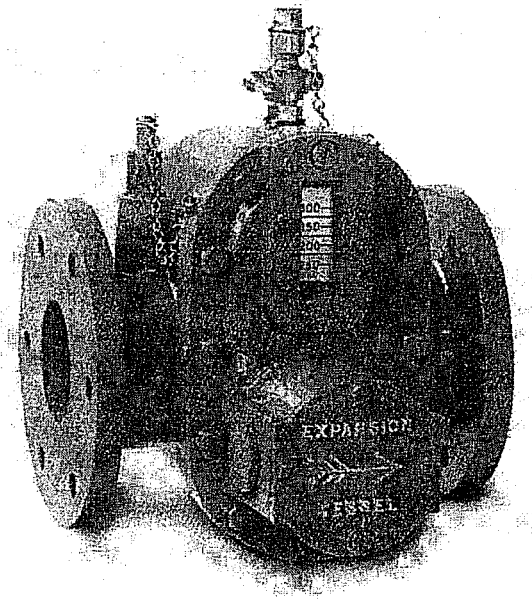

The Weir Electrical Instrument Company was established in 1937 to manufacture electrical instruments.

In the mid 1940s, the Company identified a requirement for gas and oil operated (Buchholz) relays to protect oil filled transformers and the first production units were installed at that time. A continual development programme in conjunction with the Central Electricity Generating Board led to the production of the MK10 Buchholz relay.

In 1992, the Weir Electrical Instrument Co. Ltd was acquired by the PBSI Group and a new company, P&B Weir Electrical, was formed at Corsham to continue the manufacture of the 'Weir' products together with a range of portable earthing equipment.

P&B Weir Electrical maintains a quality assurance system, certified in accordance with BS EN ISO 9001.

PBSI Ltd trading as

P&B WEIR ELECTRICAL

Unit 10 Leafield Way
Leafield Industrial Estate, Corsham
Wiltshire SN13 9SW
Tel: 01225 811449 Fax No: 01225 810909
Email: sales@pbweir.com
Web: www.pbweir.com

P&B Weir Electrical operate a policy of continuous product development and therefore retain the right to alter specifications and designs without prior notice.

List of Contents of Devcon Kit for NF Power

QTY	Part#	Description
2	10780	Fast Metal Putty
6	14277	1-Min Epoxy Gel 50ml
1	14280	Mark V Dispenser Application System (1:1 Ratio)
12	14285	Mixing Nozzle (50ml cartridge)
4	15820	Flexane 80 Putty 1lb
1	15980	FL-10 Primer 4oz.
1	15985	FL-20 Primer
1	19510	Cleaner Blend 300 1pt.
1	22905	SuperLock Penetrating Grade 2290 – 50ml
1		Complete set of MSDS Sheets
1	CASE	Tool Box to Store Kit

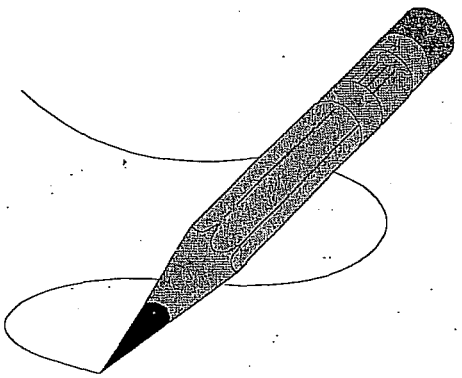

ITW Devcon®

"STEP-BY-STEP INSTRUCTIONS"

DE120 TRANSFORMER REPAIR KIT

1. Evaluation. Can the leak be worked on safely? Is the leak accesible?
2. Surface preparation is critical! Clean the area with Cleaner Blend 300, (#19510) cleaner. Sandblast, grind, etc. to get down to bare metal.
3. Apply 1-Minute Epoxy Gel, (using the Mark 5 Gun and Auto-Mix Nozzle) to the leaks, (#14277).
4. Inspect after 1 hour. The area must be 100% dry, (oil-free), or remove the 1-Minute Epoxy Gel and go back to step 3.
5. Clean again using the Cleaner Blend 300. The surface area 2" around the repair area must be cleaned and taken down to bare metal.
6. Mix and apply FasMetal Putty, (#10780) over the repair area. Overlap 1" around the original repair area onto the prepared metal surface.
7. Prime the remaining exposed prepared metal with FL-10 Flexane Primer, (#15985 - cover lightly). Let the Primer dry 15 minutes, (or dry to the touch).
8. Prime the entire area with FL-20 Flexane Primer, (#15985), and allow to dry.
9. Mix and apply Flexane #15820, (as per instructions), to the repair and covering all primed areas, apply 1/4" - 1/2" thick.
10. Superlock Penetrating Grade (2290).
11. Any questions, please Technical Service, 1-800-933-8266.

Devcon®

Transformer Oil Leak Repairs

"How-to-Do"

User's Guide

MURRAY INDUSTRIAL

50 Mundy Pond Rd.
St. John's, NF
A1C 5X3
Tel: 709-754-4213
Fax: 709-754-4714

13 Hardy Ave.
Grand Falls-Windsor, NF
A2A 2P8
Tel: 709-489-9671
Fax: 709-489-9710

2 Prince Rupert Ave.
Stephenville, NF
A2N 3W9
Tel: 709-643-6696
Fax: 709-643-6695

www.murrayindustrial.com

TABLE OF CONTENTS

Page

PREFACE..... 1

SURFACE PREPARATION FOR TRANSFORMER OIL LEAK REPAIRS

General Surface Preparation..... 2

Clean Surfaces 3

REPAIRING HOLES IN TRANSFORMERS

Stopping The Leak..... 4

Permanent Sealing of Metal..... 5

Final Flexible Coating..... 6

REPAIRING FLANGE FACES, BOLT HOLES ON TRANSFORMERS

Stopping The Leak..... 7

Permanent Sealing of Metal..... 8

Final Flexible Coating..... 9,10,11

PREFACE

For decades ITW Devcon has been recognized as the leader in engineered epoxy technology. Intensive research and development have brought us several generations from early epoxy maintenance compounds such as the famous, *"Plastic Steel A"*, in wide use even today for numerous general maintenance and repair applications.

New products, like Devcon Titanium Putty, Zip Patch, LaserFas Kit, FasMetal, have been developed to meet the demands of today's maintenance and repair requirements for greater precision repairs and resistance to an even wider range of corrosives and chemicals found in the industrial environment.

Now Devcon has a fast, sure, proven method for repairing surface or underground substation transformers that are leaking even without going off line!

The Transformer Oil Leak Repair Kit, (DE120), lets you make these critical repairs quickly using existing personnel with minimal training.

This unique kit can help you. . . . . .

- Stops leaks permanently.
- Reduce and eliminate ground water contamination and the high cost of potential penalties/ cleanup
- Reduce equipment failure, station shutdowns, and critical outages.

This kit works to seal leaking transformers in a 3-step approach:

FIRST: **Stop** the leak temporarily, (this allows you to stop oil from flowing immediately or while still running).

SECOND: **Seal** the leak permanently. (apply the Fas Metal #10780 to repair to permanently bond leak area).

THIRD: **Encapsulate** entire area. (apply Flexane 80 Putty to the repair areas for vibration and thermal cycling.

Surface Preparation for Transformer Oil Leak Repairs

The successful application of any product in the Devcon Industrial Line is largely dependent on proper surface preparation. Dust, oil, and grease, rust, and dampness affect adhesion of all epoxies. Lack of adhesion to a substrate can cause the entire repair to fail under pressure. Surface preparation will vary from job to job, and the following guidelines will help to prepare any substrate for use with Devcon's Leak Repair Kit, (DE120). This section describes the general surface preparation, as well as the methods to use to prepare the surface.

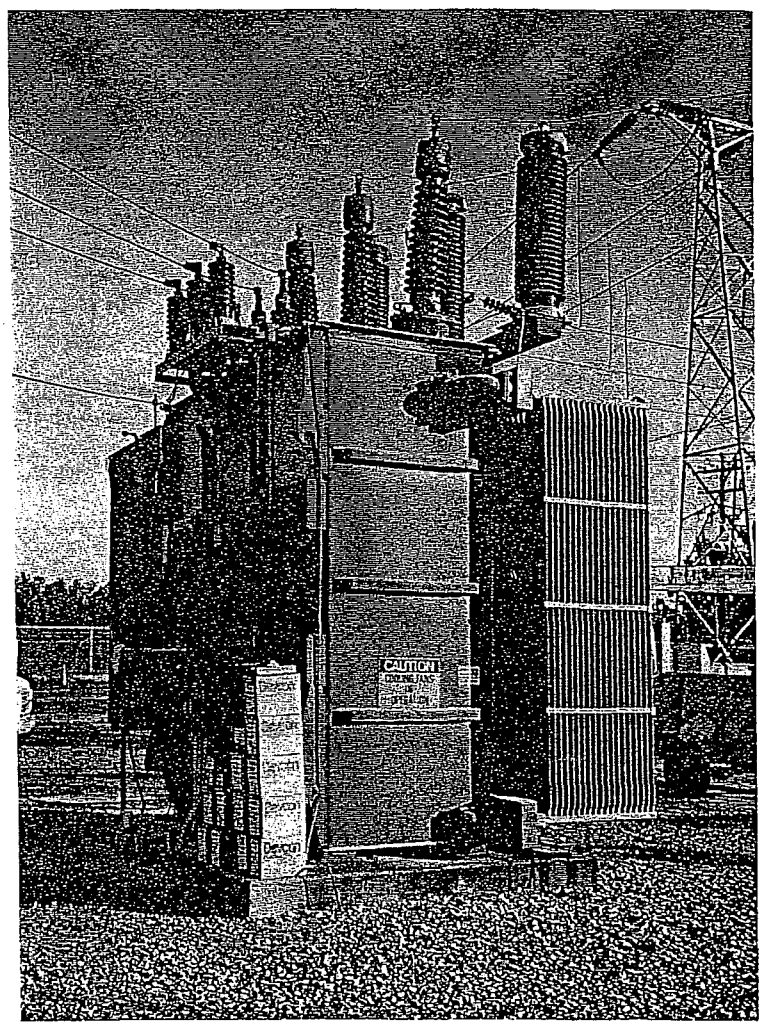

General Surface Preparation

1. All surfaces must be dry, clean, and rough.
2. Stop all liquids from leaking onto the surface, while repairing the substrate.
3. Remove all paint, rust, grime from surface by abrasive blasting or other mechanical techniques, (such as grinding). Make sure surface does not become too polished.
4. Degrease area with Cleaner Blend 300.
5. Provide a *"profile"* on the metal surface by roughening the surface through abrasive blasting or mechanical means.
6. The following paragraphs describe specific surface problems.

Clean Surfaces

1. If surface is oily or greasy, use Cleaner Blend 300, (or your approved cleaner) to cleanse the surface.

2. After the recommended method of cleaning, the surface should be grit-blasted to produce a good "*surface profile*". Oils and contaminants usually get imbedded into the surface, and do not wash away with degreasing.

3. The blasting medium should be angular grit such as silicon carbide, Black Beauty, or aluminium oxide. A .003 to .005 mil profile should be attained. The medium Black Beauty (size 1240 medium grade) will produce this grade.

4. If you cannot abrasive blast the substrate, you may use a coarse grinding wheel (60 grit or coarser), or a needle gun to achieve the desired mil profile.

5. Always try to make the repair as soon as possible after cleaning the substrate, to avoid oxidation or flash rusting. If this is not practical, a general application of Devcon FL-10 Primer will keep metal surfaces from flash rusting.

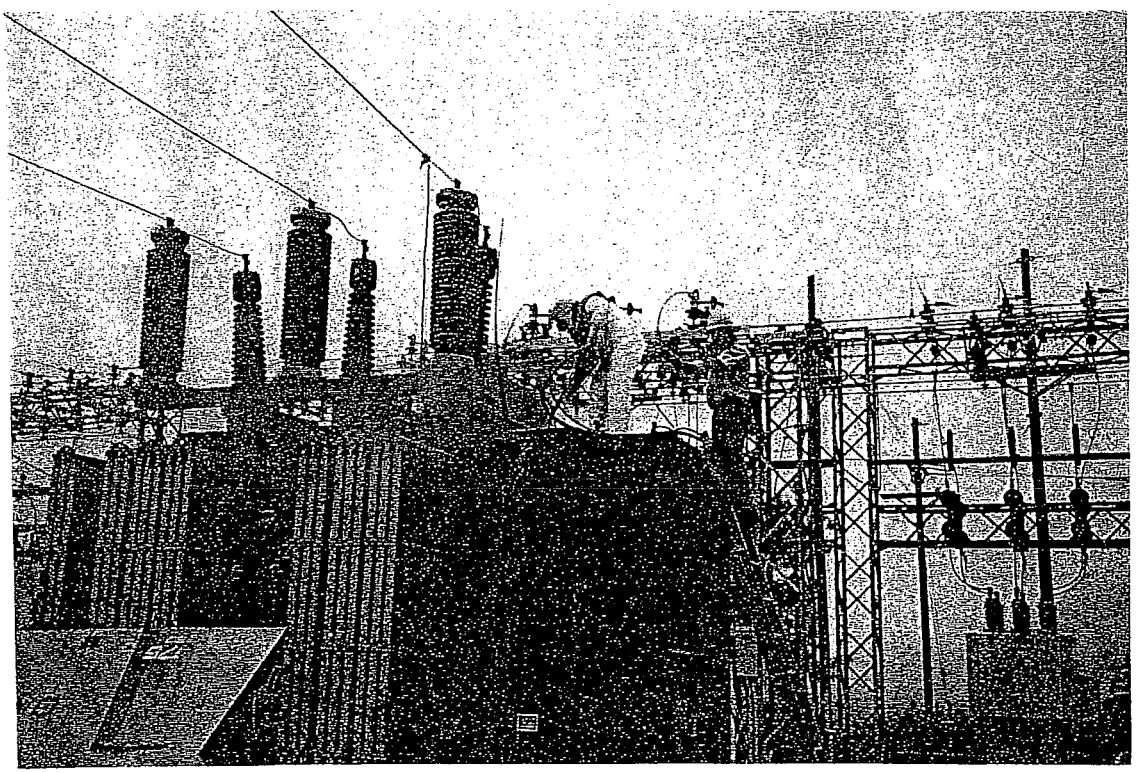

Repairing "Holes" in Transformers

Stopping The Leak

Active leaks, (holes) in transformer casings, cooling fins, and drain plugs can also be repaired using Devcon's Leak Repair Kit, (DE120). It takes a little ingenuity to first *"stop the leak"*, but the procedures follow the same format as "Flange Face, Bolt Hole Repairs".

Take the Mark V gun with the 1-Minute Epoxy and attach the Auto-Mix nozzle to the end of the epoxy cartridge. For leaks that are active, take a piece of polyethylene, (plastic bag), and squeeze 2-3 times the amount of epoxy you will need onto the plastic. If hole is not leaking, pump the 1-Minute Epoxy over the hole covering entire area until epoxy starts to gel, (20-30 seconds). ***Figure 1.***

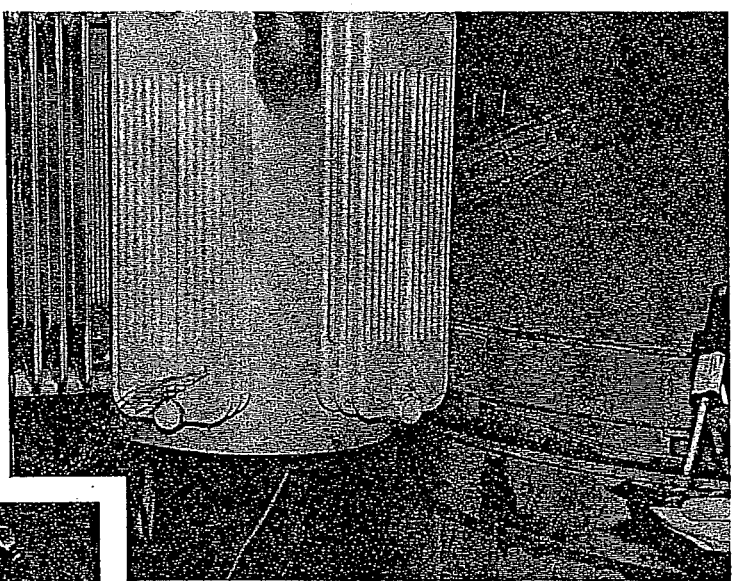

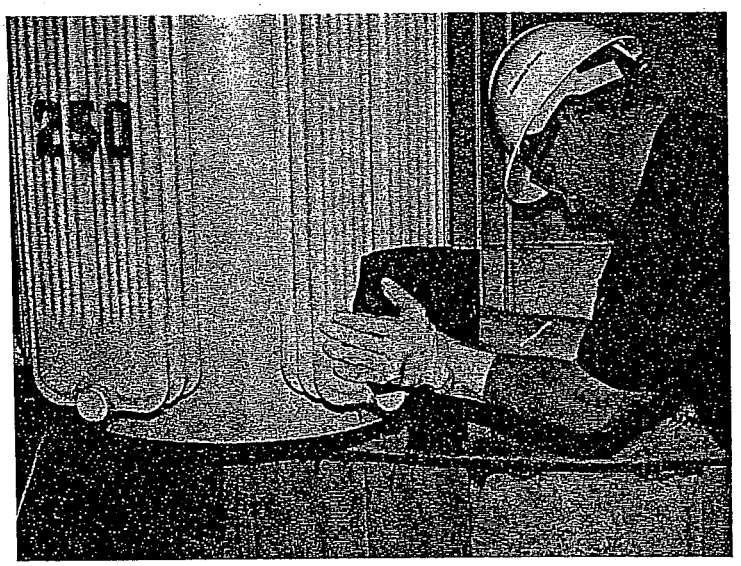

With one hand holding a cloth on the "hole" to stop the leak, take the polyethylene (plastic) sheet with 1-Minute Epoxy squeezed in a mound, remove hand (holding cloth), and *"quickly"* push plastic sheet with epoxy over the leaking hole. ***Figure 2.***

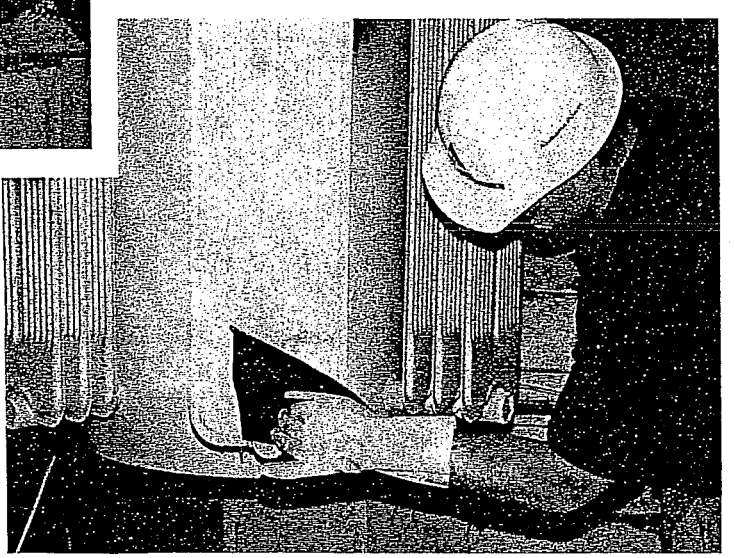

Oil should stop flowing within 20-30 seconds from applying plastic sheet onto hole. Peel away plastic sheet after 1 minute to inspect.If the leak is weeping, take Mark V gun and squeeze epoxy on to leak points to stop leak. You are ready to continue to the next step, *a permanent sealing of the leak!* ***Figure 3.***

Permanent Sealing of Metal

Note: Zip Patch, (#11500), can also be used to seal "large holes" in metal over the 1-Minute Epoxy or by itself to seal holes that need bridging.

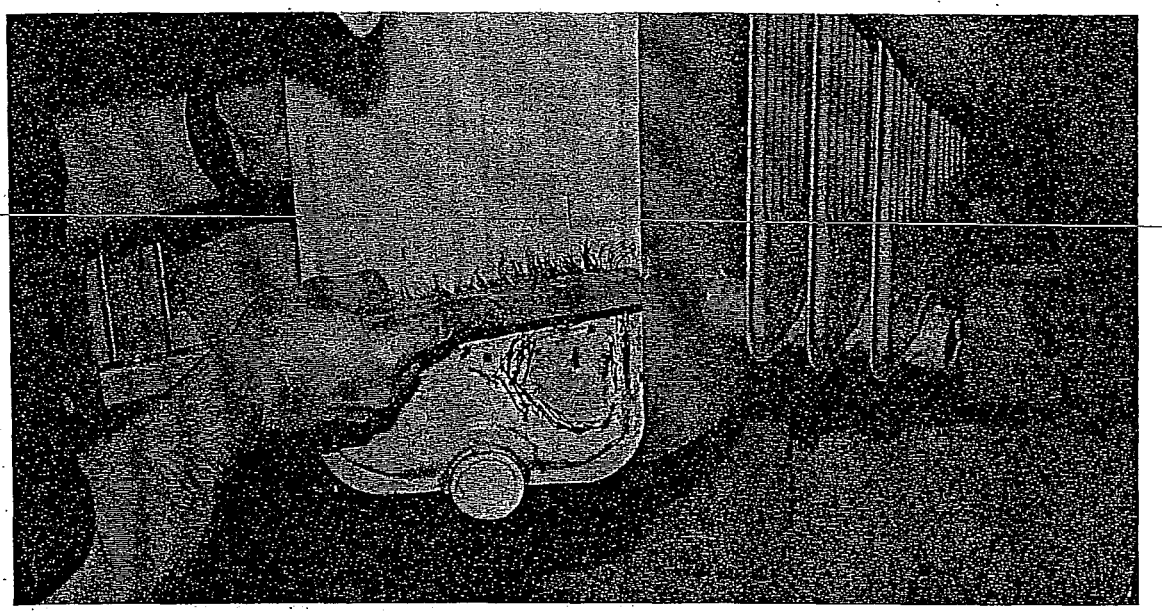

After the oil has stopped leaking, clean the entire repair area with a wire brush, and degrease surrounding area with your approved cleaner, (see cleaning section). ***Figure 4***

Note: The oil must be stopped before making this repair. You cannot continue unless the leak is dry.

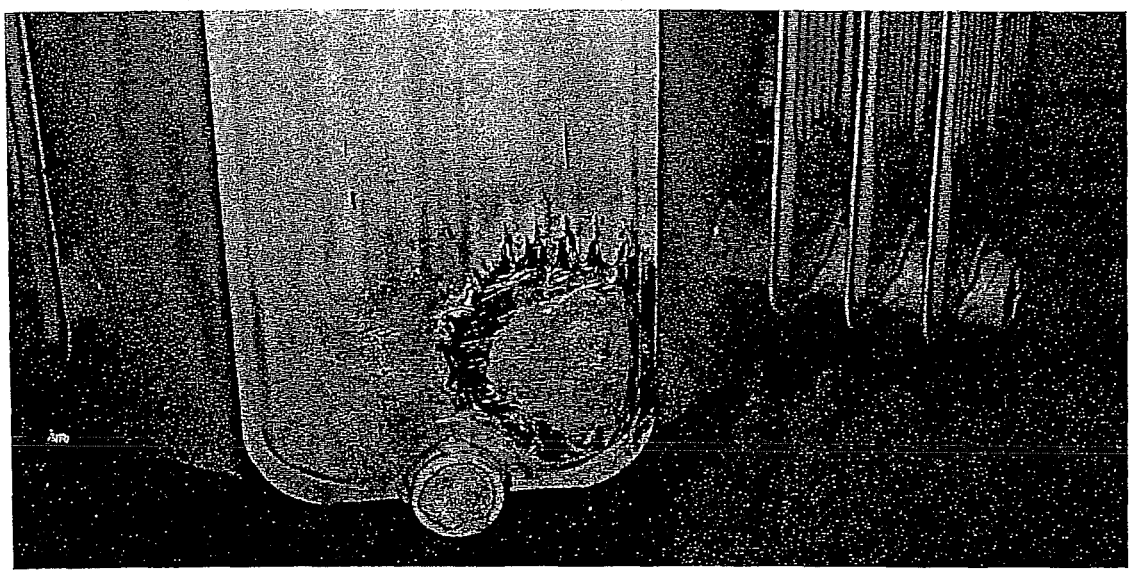

Mix the FasMetal, (#10780), on a board or plastic sheet. Take a 1-1/2" putty knife and apply material over the 1-Minute Epoxy patch. Smooth out FasMetal to a smooth surface. ***Figure 5***

Note: Apply FasMetal generously over the hole and 2-3 inches around the leak for sound adhesion to a good metal surface.

Final Flexible Coating

At this point of the repair, there is no oil leaking from the transformer. If there is any leaking, or seeping, *you must* go back to "Stopping the Leak" section and get the leak stopped.

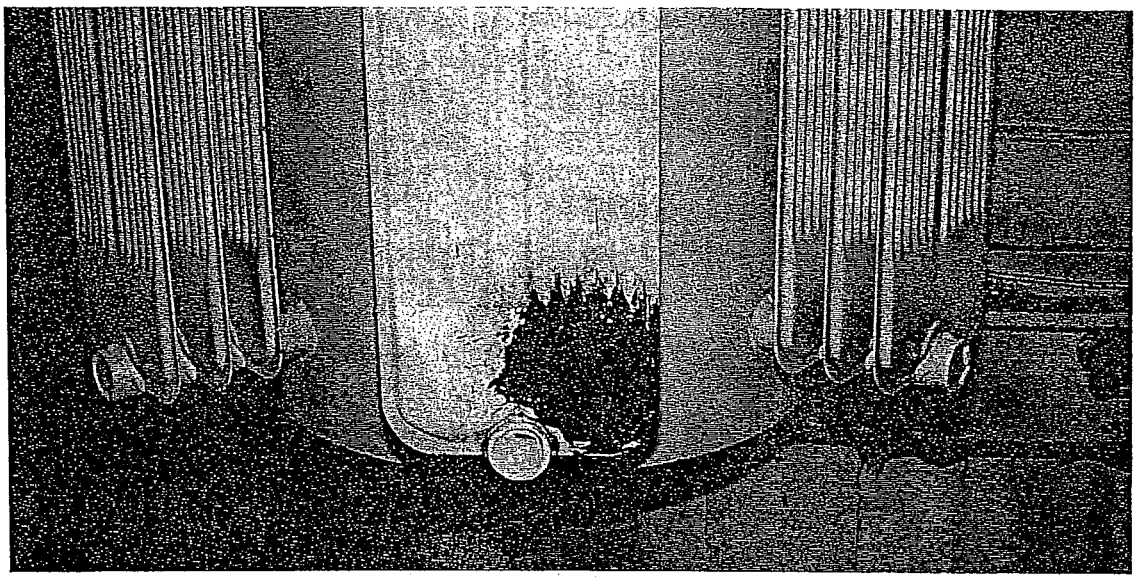

Apply FL10 Primer. (#15980), to the epoxy repair and surrounding metal area. After primer has dried, you are ready to apply the final flexible coating. ***Figure 6.***

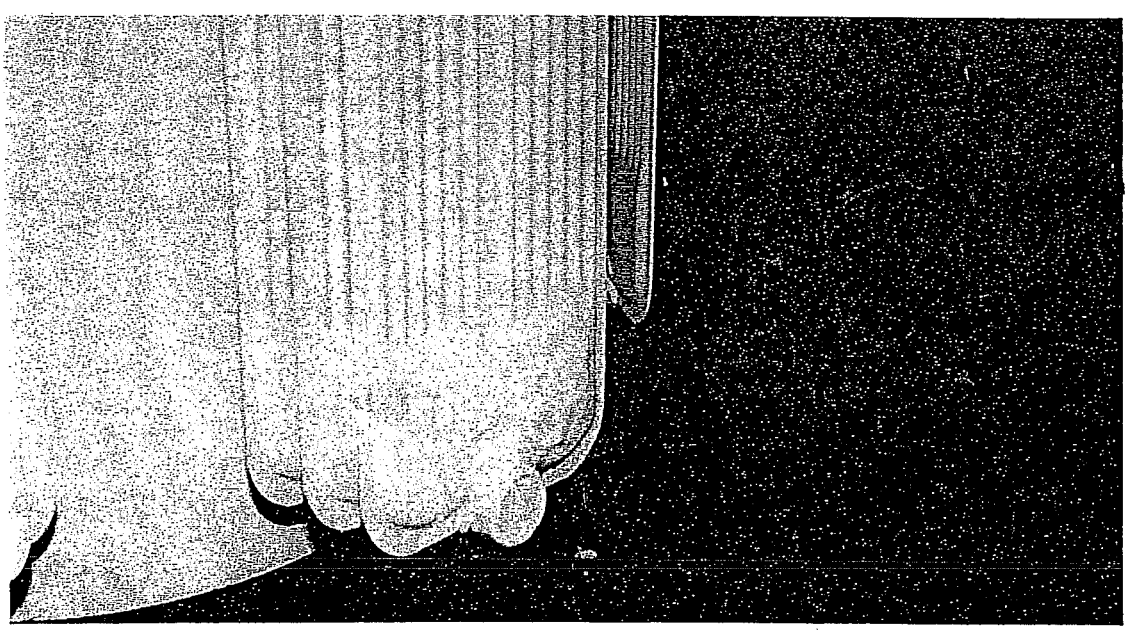

Apply Flexane 80 Putty, (#15820), to the epoxy repair. Be sure to apply over the Fas Metal and extend 1-2 inches outside that repair. *Repair must cure for 24 hours!* ***Figure 7.***

Finished Job: The flexible repair allows the transformer to thermal cycle, (expand and contract), without cracking the epoxy repair. This "hole" is now *permanently* repaired.

Repairing Flange Faces, Bolt Holes on Transformers

Stopping The Leak

Open the Leak Repair Kit, (DE120), and take the Mark 5 Gun with the 1-Minute Epoxy and attach the Auto Mix Nozzle to the end of the epoxy cartridge. You are now ready to inject the 1-Minute Epoxy onto the leaking area. Because of the fast gel time of the product, (20 - 30 seconds), you must have everything ready for the repair. Remember that all repairs should be made with outside temperatures above 50°F for proper curing of all Leak Repair materials. Follow the procedures described below for a successful application.

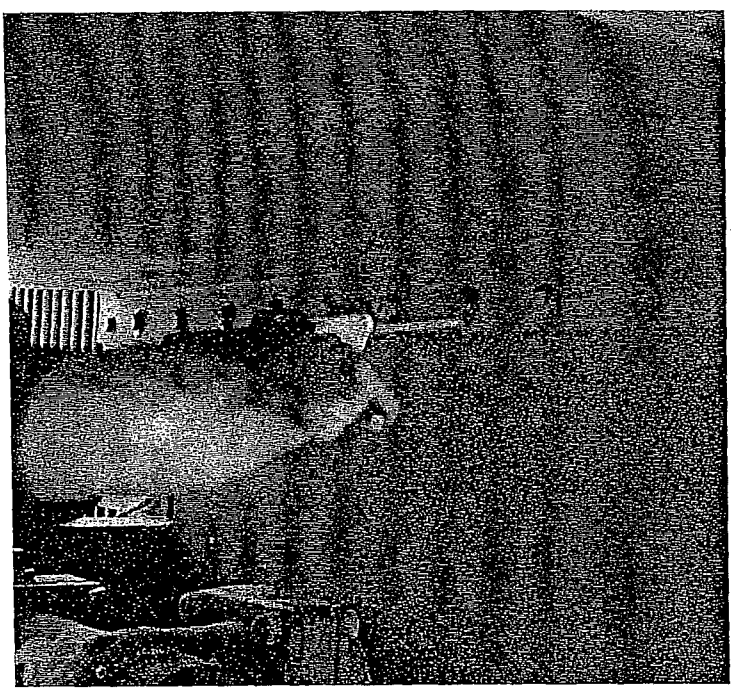

Bolt holes: Apply the epoxy around the bolts. The 1-Minute Epoxy starts curing in 20 - 30 seconds. Using your other hand (wearing a glove), start to smooth material around holes to get a good seal. The oil will stop flowing from the bolt holes when the epoxy has hardened. ***Figure 8.***

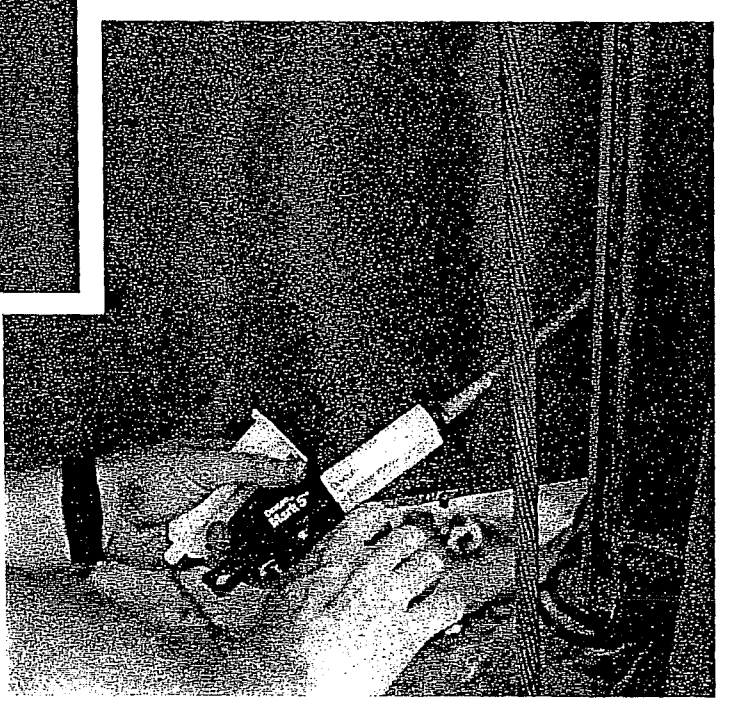

Flange Faces: Apply a generous bead of epoxy at the interface. Gel time is 20 - 30 seconds. Squeeze the material with your finger, (wearing a glove), into the gap at the interface to stop any leaking until material gels. ***Figure 9.***

Weld Seams: First take a ball-pean hammer and pean the weld area to stop or slow down the leak. Apply the 1-Minute Epoxy generously to the pinhole area, compressing it with your other hand, (wearing a glove).

Permanent Sealing of Metal

You have now stopped the oil leak temporarily by using 1-Minute Epoxy. This has enabled you to have a ***good clean surface*** for permanent adhesion. After the 1-Minute Epoxy has been applied to the leaking areas you should immediately be ready to proceed to the next step: ***a permanent epoxy coating*** over the top, sealing the metal for life! First clean the area with your approved degreaser or Devcon's Cleaner Blend 300, (#19510), to get all unwanted oil away from the repair.

Applying this secondary coating ensures a strong adhesion to good surrounding metal at the point of the leak. You are now ready to apply our FasMetal product: ***a permanent repair*** around the leak.

Bolt Holes, Flange Faces, Weld Seams: Mix the FasMetal material on a piece of cardboard, making sure the material is mixed with no streaking of colors.

Wearing a glove, smear the material over the holes, weld seams or flange faces that have been coated with 1-Minute Epoxy. Apply a generous amount 1 - 2 inches wider than the first coating to ensure good adhesion to good solid metal. ***Figure 10.***

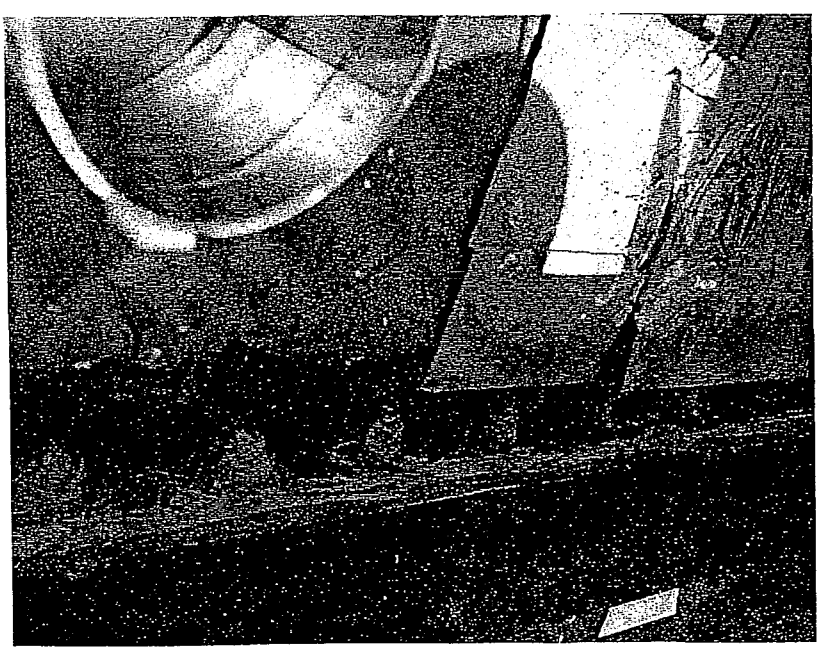

Make sure all the epoxy material is smoothed out at the surface for good adhesion and easy acceptance of the final coat in this system. ***Figure 11.***

Final Flexible Coating

This final coating is most important in this process. First you ***stopped*** the leaking oil with a special epoxy, (1-Minute Epoxy), that bonded to an oily surface. You then made a permanent ***seal*** to the surrounding metal with FasMetal. Now you need to ***encapsulate*** the entire repair with Devcon Flexane 80 Putty or Liquid. This acts as a flexible coating that will stay flexible through thermal cycling and expansion and contraction of the surface because of temperature variances. Because of its 100% elongation, Flexane will *"fill the void"* and take tremendous compression and expansion over time. This will ensure that the seal is not compromised.

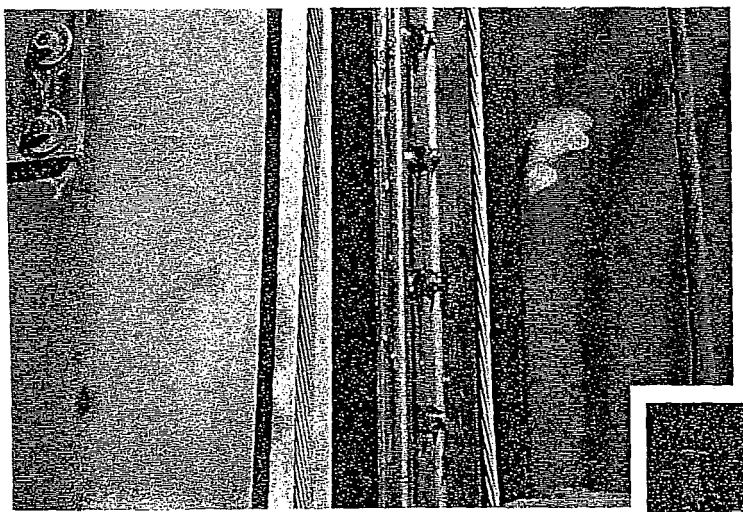

Vertical Flange Repairs: First coat the entire flange face with FL-10 Metal Primer, (#15980). This ensures an excellent bond for the Flexane material to the metal and epoxy surface. ***Figure 12.***

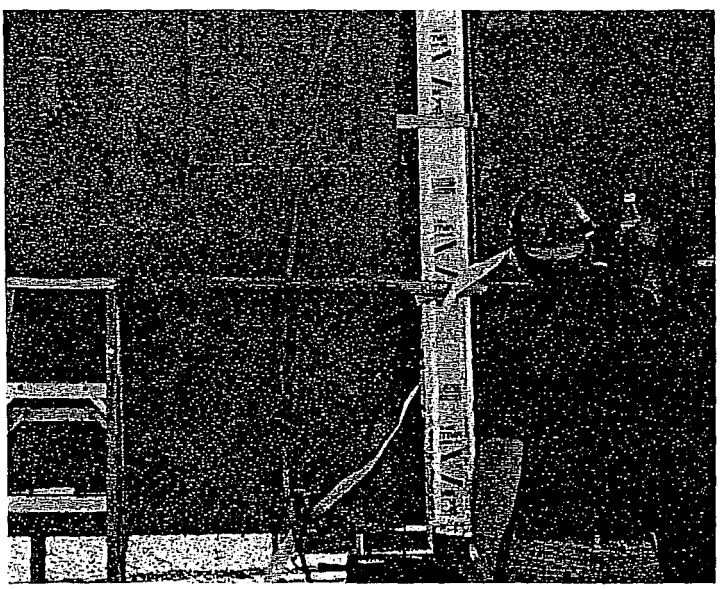

Molding: Using sheet metal, thin gauge plywood or sonofoam, (aluminum insulation with foam interior), make a form to cover the flange face that needs to be coated. Use Devcon's Release Agent, (#19600), to coat the inside of the mold for easy removal after the pouring of the Flexane 80. ***Figure 13.***

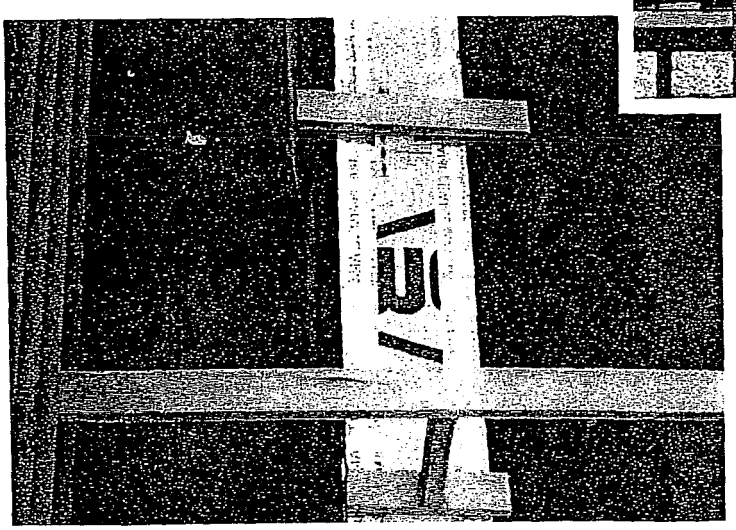

Use the 1-Minute Epoxy to mount the form you have made over the flange face. Be sure to make *"cross-members"* and *"support pieces"* to help secure the form to the transformer. This will help to carry the weight of the Flexane Urethane once it has been poured. ***Figure14.***

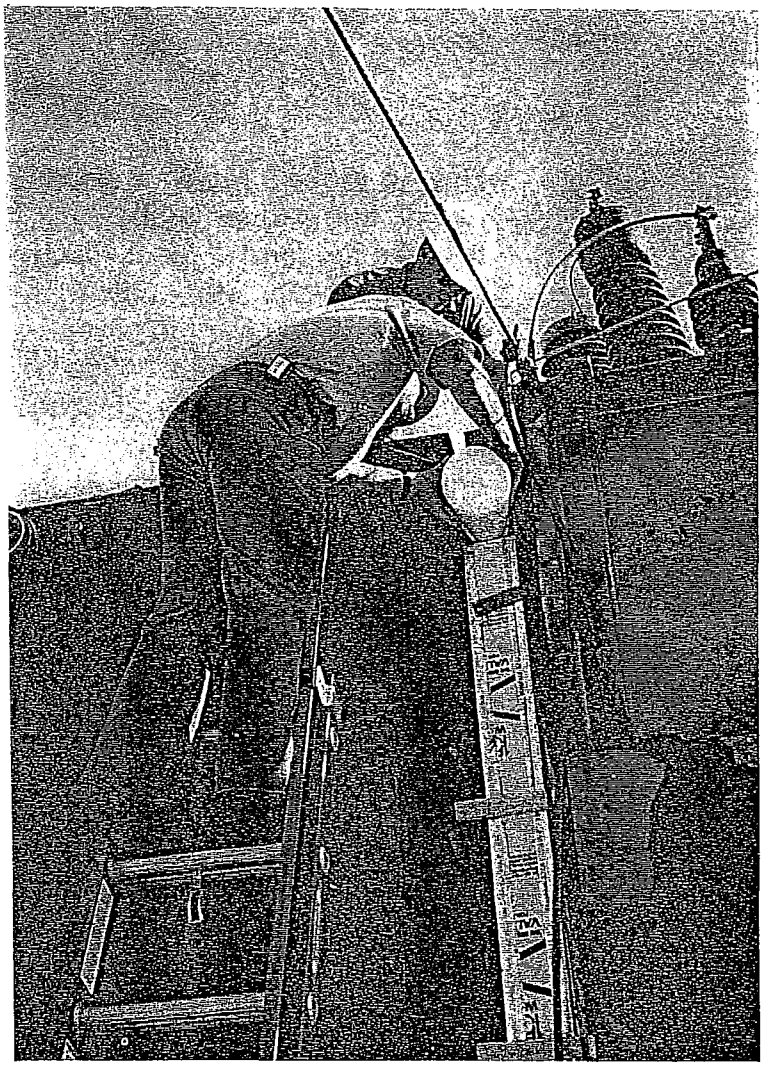

Pouring: Mix Flexane 80 Liquid, (#15800), for 2 minutes and begin to pour at the top of the mold. Tap the mold as the material "runs down" inside the mold to ensure that no air or voids have been entrapped. For large pours use Flexane 80 Liquid, (10 lb., #15810) for faster results. ***Figure 15.***

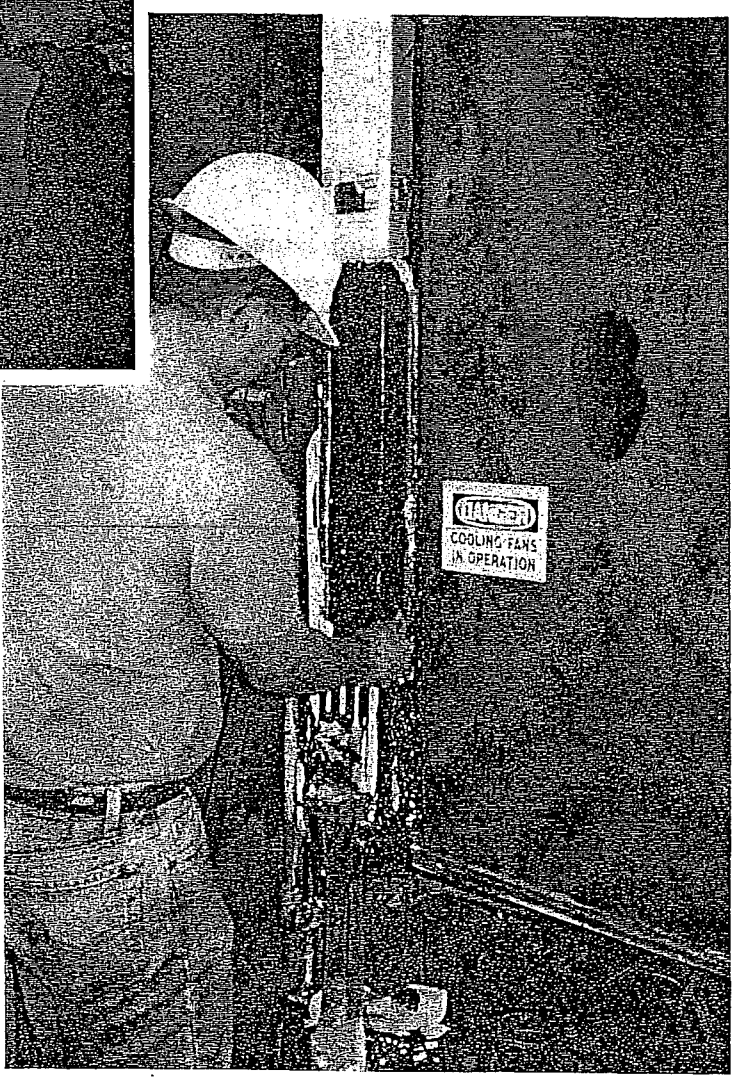

Demolding: After 6 - 8 hours, you can demold the molded form from the Flexane 80. Take a screwdriver or utility knife and cut away the form which should peel away easily if you applied the release agent. Smooth the surfaces if necessary and you are ready to coat the repair. ***Figure 16.***

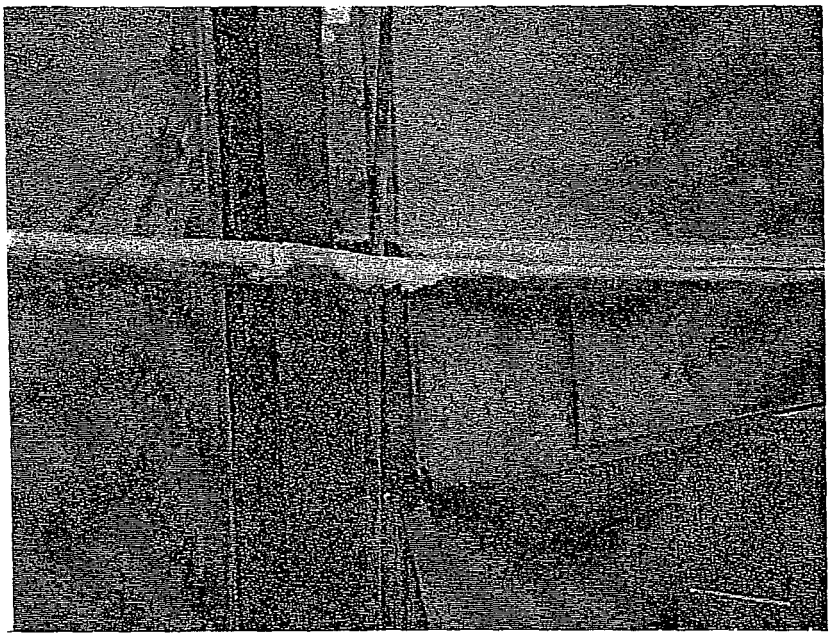

How to make a Mold. A good rule of thumb to remember is to make the form at least 1 inch over size in diameter of the flange face you want to cover. Encapsulate the entire flange area around the bolts and faces to ensure good surface contact. ***Figure 17.***

Finished Job: The finished transformer is now permanently sealed from leaking at the flange face. This repair also protects the equipment from thermal cycling, expansion, contraction and vibration during its life cycle. ***Figure 18.***

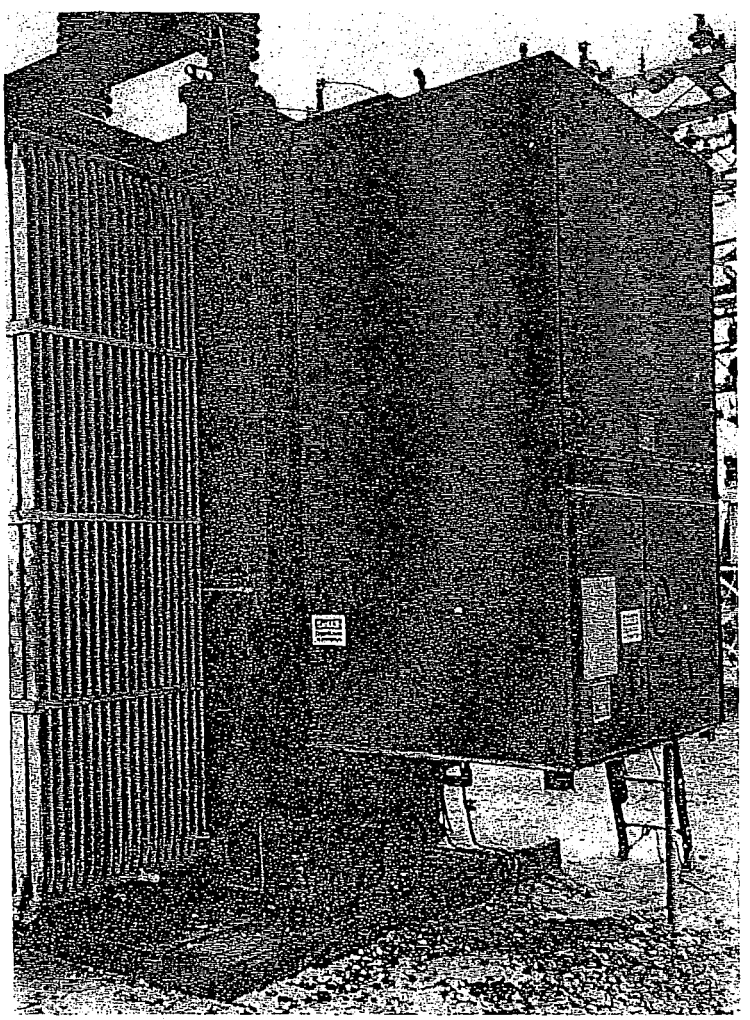

Weld Seams: This is a simpler repair. No molds or forms are needed. You take our Flexane 80 Putty, #15800, and just apply over the Fas Metal. This thicker putty version will stand up to 3/4" thick without sagging.

REFERENCE
INSULATING OIL

Created by: M. Rideout
Revised by: B. Ropson
Reviewed by: G. Samms
Approved by: G. Samms

MSR010-1: Oil Dielectric Requirements

The following table indicates the oil dielectric requirements for our system equipment.

Equipment	Requirements
Transformers (below 33 kV) Oil Circuit Breakers (below 33 kV) Voltage Regulators (below 33 kV) Reclosers (all voltages) On-Load Tapchangers (all voltages)	A dielectric strength of 22 kV is satisfactory. If the dielectric strength is less than 22 kV, the oil should be filtered and brought up to at least 26 kV. If 26 kV cannot be obtained, the oil should be replaced.
Transformers (33 kV and higher) Oil Circuit Breakers (33 kV and higher)	A dielectric strength of 26 kV is satisfactory. If the dielectric strength is less than 26 kV, the oil should be filtered and brought up to at least 26 kV. If 26 kV cannot be obtained, the oil should be replaced.

All oil tests should be conducted to meet the appropriate testing standard. Ensure that the test equipment used is capable of operating to this standard.

REFERENCE
MAINTENANCE CYCLES

Created by: J. Coady
Revised by: M. Royle
Reviewed by: D. Manning
Approved by: G. Samms

All equipment must be maintained on a regular basis. For cases where equipment cannot regularly be taken out of service, scheduling should be flexible to take advantage of instances when it is going to be available. In some cases this will involve doing maintenance before it is due simply because the equipment is available or because the necessity has been established during an inspection. Maintain equipment within the following maximum cycles:

Equipment Type	Maintenance	Frequency
Substations	Maintenance II Inspection* Thermoscanning	1 month 1 year
Portable Substations	Maintenance III Thermoscanning	1 year Every installation
Batteries	Maintenance III	6 months
Battery Chargers	Maintenance III	1 year
Circuit Breakers	Oil Analysis (BOA) Maintenance IV	1 year 10 years or after 80% contact wear
Plant Circuit Breakers	Maintenance IV	5 Years
Power Cables and Accessories	Maintenance III	As required
Reclosers	Maintenance IV	6 years or 200 fault operations
Nu-Lec Reclosers	Maintenance III	5 years
Group Operated and Ground Switches	Maintenance IV	As required or as part of the Substation Refurbishment Program
Power Fuses	Maintenance IV	As required
Switchgear (excluding breakers)	Maintenance IV	As required or as part of the Substation Refurbishment Program
Voltage Regulators	Maintenance IV	As required
Current Transformers	Maintenance III	As required or as part of the Substation Refurbishment Program
Potential Transformers	Maintenance IV	As required or as part of the Substation Refurbishment Program
Power Transformers	Oil Analysis (TCA) Protection Device Inspection Maintenance IV	1 year 6 years 12 years
On-Load Tap Changers (Typically completed with Power Transformers)	Oil Analysis (TASA) Protection Device Inspection Maintenance IV	1 year 6 years 12 years or 70,000 operations

*Substation Inspection consists of two types - short and detailed. Detailed is to be completed at least six times annually and at least once quarterly. Short inspections are to be completed when detailed ones are not.

REFERENCE
MEGGERING

Created by: B. Ropson
Revised by: B. Ropson
Reviewed by: G. Samms
Approved by: G. Samms

MSR012-1: General Meggering Information

A megger test, the most commonly used insulation test, is a DC resistance measurement used to determine whether or not the insulation is capable of withstanding the power circuit voltage

The megger leads and terminals should be kept clean with the leads kept as short as possible. Leads should be air insulated from each other and from ground and grounded objects. This is to prevent misleading results from measuring the conductor insulation resistance instead of the transformer insulation resistance.

Attempt to take all megger readings at a temperature above the dew point. An indication would be the absence of moisture on the surface of equipment being meggered.

Record the temperature of the insulation each time a reading is taken. For interpretation correct the reading to 20°C to compensate for the inverse effect of temperature on resistance. A rule of thumb states that for every 10°C increase in temperature above 20°C, halve the resistance; or, for every 10°C decrease in temperature below 20°C, double the resistance. For more precise corrections refer to Table 1, which gives temperature correction factors for electrical equipment. This data can also be found in the AVO manual, "*The Complete Guide to Electrical Insulation Testing*".

Table 1: Temperature Correction Factors for Electrical Equipment

Temperature Correction Factors for Insulation Resistance	
Oil Temperature (^{o}C)	**Correction Factor "K"**
-10	0.25
0	0.40
10	0.50
20	1.00
30	1.60
40	2.50
50	4.00
60	6.40
70	10.0
80	16.0

MSR012-2: Maximum Meggering Voltages

To detect wet or contaminated insulation and avoid damaging the insulation, do a preliminary test at the lowest voltage range available. Correct the cause of low readings before proceeding. Select a voltage appropriate for the lowest insulation rating of the components to be meggered (i.e. a PT with graded insulation).

Transformer Cores

These should be meggered at 500V unless the manufacturer's recommendations suggest a higher or lower voltage.

Distribution Transformers

These will be meggered at 1000 volts.

REFERENCE
MEGGERING

Transformer Windings

Except for distribution transformers, these will be meggered at indicated in Table 2.

Table 2: Maximum Megger Voltage Levels for Transformer Windings

Winding Configuration	Maximum Megger Voltage (V)
Less than 500 LV windings	500
2.4 kV star connection	1000
2.4 kV delta connection	2500
4.16 kV star connection	2500
4.16 kV delta connection	5000
12.5 kV and up (any connection)	5000

All Other Equipment

Megger at the voltages given in Table 3.

Table 3: Maximum Megger Voltage Levels by Equipment Rating

Rating	Maximum Megger Voltage (V)
Less than 100 volts	100-250
100 volts < Rating < 440 volts	500
440 volts < Rating < 550 volts	500
550 volts < Rating < 2400 volts	1000
2400 volts < Rating < 4160 volts	2000
Greater than 5000 volts	5000

MSR012-3: Test Types

The 60-Second Test

A reading is taken after test voltage is applied for 1 minute. This test is very sensitive to temperature. The temperature of the insulation is recorded at this time. If the reading is questionable it should be temperature corrected before any decisions are made.

The 60/30 Second Test

This is the ratio of the 60 and 30 second readings. It is usually more meaningful for insulation that has an appreciable capacitive component. The results are not affected by temperature. Refer to Table 5 for interpretation.

The 10/1 Minute Test

This is the ratio of the 10 and 1-minute readings. It is used for equipment that has a high capacitive component. The results are not affected by temperature. Refer to Table 5 for interpretation.

The Step Voltage Method

Readings are taken at different voltages. The first may be taken at 500 volts and then, after voltage removal and discharging, a second is taken at 2500 volts. A lower reading at the higher voltage would indicate the presence of contamination or deteriorated insulation.

REFERENCE
MEGGERING

Table 4: Megger Tests by Equipment Type

Equipment	Measurement	Configuration	30 sec. .	60 sec. .	10 min. .	Insulation Temp. (^{o}C)
Distribution Transformer	H1 – GND	H2 lifted from GND	X			
	HV- LV	GND guarded	X			
	LV – GND	HV guarded	X			
Potential Transformer	H1 – GND	H2 lifted from GND		X	X	X
	HV- LV	GND guarded		X	X	X
	LV – GND	HV guarded		X	X	X
Current Transformer	HV – GND		X	X		X
	HV- LV	GND guarded	X	X		X
	LV – GND	HV guarded	X	X		X
Power Transformer	HV – GND	LV & Tert. Guarded. HV & LV neutrals floating.		X	X	X
	HV- LV	Tert. & GND guarded. HV & LV neutrals floating.		X	X	X
	LV – GND	HV & Tert. guarded. LV neutral point floating.		X	X	X
	Tert. – GND	HV & LV guarded		X	X	X
	Core - GND	Core GND lifted	X	X		X
Breakers & Reclosers	Ph. – GND	Closed with 3Ph. Commoned	X	X	*	X
	Ph2 – Ph1,3	Closed with Ph1&3 commoned & GND guarded	X	X	*	X
	Across Ph1	Open with GND guarded	X	X		X
	Across Ph2	Open with GND guarded	X	X		X
	Across Ph3	Open with GND guarded	X	X		X
Voltage Regulators	S,L & SL - GND			X	X	X
Generators	Stator – GND	External cables guarded		X	X	X**
	Rotor – GND	Brushes lifted		X	X	X**
Exciter	Stator – GND	External cables guarded		X	X	X**
	Rotor – GND	Brushes lifted		X	X	X**

* - For units with capacitance high enough to cause appreciable polarization, use the 1 and 10 minute readings.
** - If possible, take readings above the dew point. If this is not possible, note the condition on the test results.

Note: The tests, as shown in Table 4, are adequate for most instances. In the case that any case is questionable, further more definitive testing will be done. Once a problem is identified, corrective action may involve drying, cleaning, reconditioning or replacement.

NEWFOUNDLAND POWER
A FORTIS COMPANY

REFERENCE
MEGGERING

MSR012-4: Transformer and Circuit Breaker Meggering

If the 120-volt line-operated megger is used, the resistance indicated by the instrument should be recorded approximately one minute after the voltage from the instrument is applied to the equipment. If the hand-cranked megger is used, the time interval after starting to crank the instrument until recording the resistance value indicated should not be less than 30 seconds. This reduction in time is permissible due to the difficulty in cranking a megger continuously for one minute and the fact that the greater errors are present in the temperature correction factor. In any case, the time interval during which the voltage is applied should be consistent throughout the tests.

The insulation resistance of the equipment will be greater when the oil is cold than when it is hot. This is because the resistivity level of oil increases as the temperature decreases. The insulation resistance will also be greater when the tank is empty than when it is full of oil. This is because of the longer leakage path to ground when there is no oil. The measured resistance at the oil temperature is corrected to 20°C by multiplying the measured value by the appropriate correction factor from Table 1 above.

1. Transformer Meggering Specifics

Do not make megger tests while the unit is under vacuum or without oil. The greater the vacuum, the lower the spark-over level and, if a unit is meggered in air, the values may lead to wrong conclusions and will not agree with readings taken at a later date when they are taken under oil.

The recommended practice in measuring insulation resistance is to always ground the tank and the core or to be sure they are grounded. Short-circuit each winding of the transformer at the bushing terminals. Resistance measurements are then made between each winding and all other windings grounded.

Tests should be made from windings to ground and between windings as follows:

1. Two Winding Transformers: *

a) High to Low and Ground

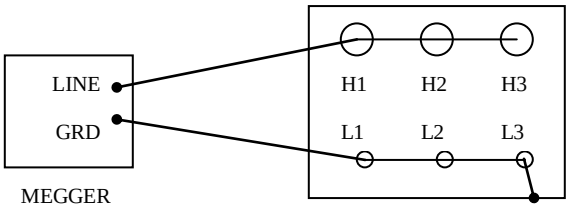

b) Low to High and Ground

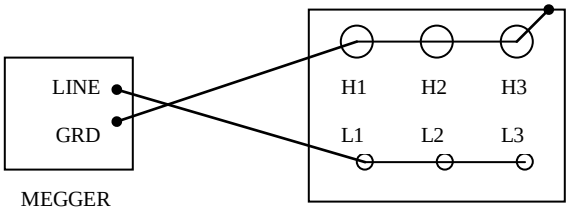

REFERENCE
MEGGERING

c) High and Low to Ground

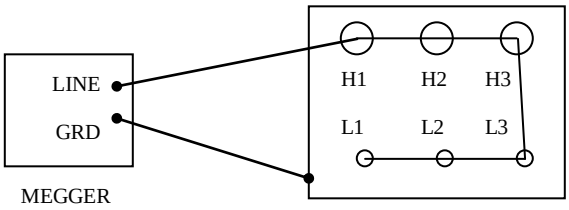

2. Three Winding Transformers: *

a) High to Low, Tertiary and Ground

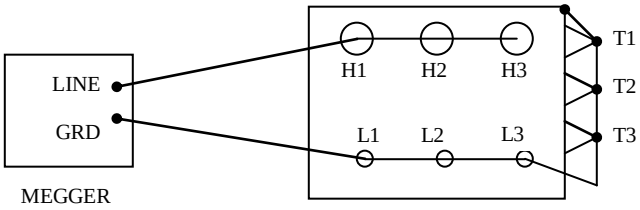

b) Low to High, Tertiary and Ground

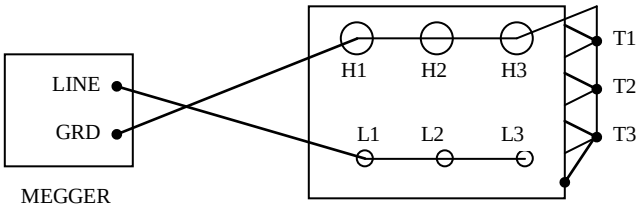

c) Tertiary to High, Low and Ground

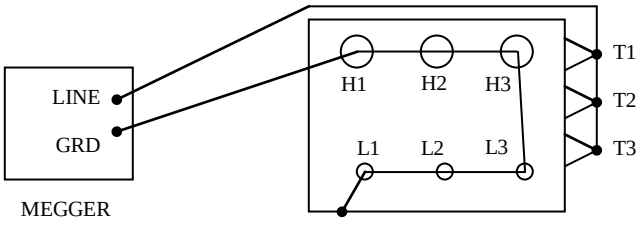

d) High and Low to Tertiary and Ground

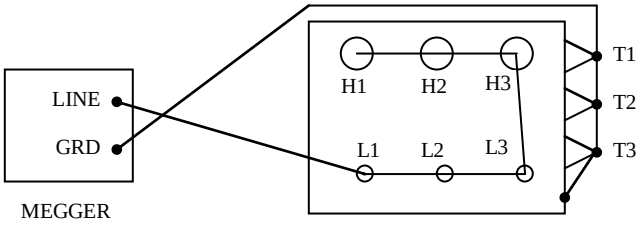

REFERENCE
MEGGERING

e) High and Tertiary to Low and Ground

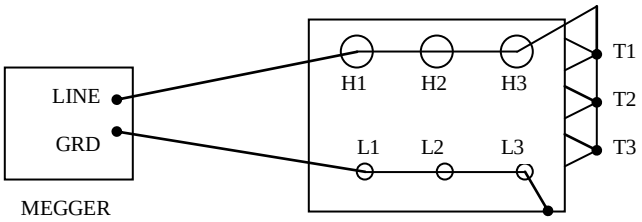

f) Low and Tertiary to High and Ground

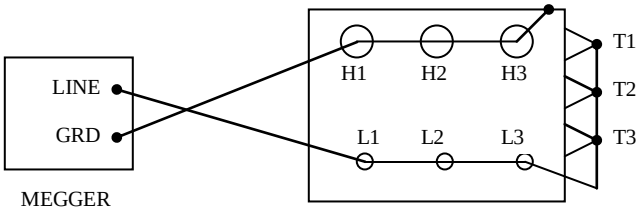

g) High, Low and Tertiary to Ground

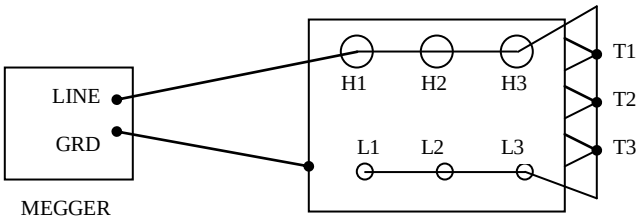

* Permanently connected windings, such as autotransformers, shall be considered as one winding.

For example, in 2(a) above, the high voltage, tertiary voltage and low voltage windings are each short circuited by connecting their terminals together. The high voltage winding insulation resistance is measured by connecting the high voltage terminals to the line terminal of the megger. The low voltage and tertiary voltage windings are connected together and to ground and to the ground terminal of the megger. The resistance measured in this case is commonly designated the H-LTG resistance.

On some older model transformers, the core is grounded by a wire connected underneath the main cover inside the tank. In this case, oil has to be removed in order to remove the wire to check that no random grounding of the core has occurred. On most of the transformers that we now have in service, an electrical connection is made between the core and a control bushing that is terminated on the cover or tank wall in a weatherproof terminal box. The core can be grounded directly or through a grounding resistor. In either case, the ground can be easily disconnected and the core tested at the terminal box. In testing for power transformer core grounds, any megger reading greater than 100 mega-ohms, using a 500V megger, indicates proper core insulation.

Do not megger control wiring or core to ground at a voltage higher than 500 volts.

REFERENCE
MEGGERING

2. Circuit Breaker Meggering Specifics

As stated in MSP004, circuit breakers are meggered in the following manner:

1. With the breaker closed, megger phase to phase and across each phase to ground;

2. With the breaker open, megger across each open contact;

Refer to MSR012-2 for maximum meggering voltages.

Do not megger control wiring at a voltage higher than 500 Volts.

MSR012-5: Interpretation of Results

Table 5: Condition of Insulation as Indicated by Ratios *

Insulation Condition	60/30 Second Ratio	10/1 Minute Ratio
Dangerous	-	Less than 1
Questionable	1.0 – 1.25	1.0 – 2 ***
Good	1.4 – 1.6	2.0 – 4.0
Excellent	Above 1.6 **	Above 4.0 ****

* These are tentative figures and are subject to the operators experience and equipment types.
** In some cases, values about 20% higher may indicate brittle and cracked insulation in motors and generators.
*** These results would be satisfactory with equipment having very low capacitance such as some reclosers, control wiring and the like.
**** The meggering procedures presented in MST008 can be followed until the proposed revisions to Power Transformer maintenance are released.

The following criteria for minimum insulation values can be used as a guide, but equipment will usually test considerably higher. Once several periodic readings are accumulated, the trend of the readings should be considered at least as informative as the individual readings.

The 1 Mega-Ohm Rule

The rule 1 mega-ohm per kV of rated voltage may be used for equipment rated above 1000 volts as a rough guide.

Rotating Machinery

Use the formula,

$$R_m = kV + 1$$

Where: R_m = the minimum insulation resistance at 40°C
kV = rated machine terminal-to-terminal potential in kilovolts

Breakers

If these are meggered, dressed and isolated from associated equipment, they should have a minimum value of 10,000 mega-ohms at 20°C.

REFERENCE
MEGGERING

Transformers

Use the formula,

$R = CE/\sqrt{kVA}$

Where: R = minimum 1-minute 500 volt DC insulation resistance in mega-ohms from winding to ground or winding to core with other paths guarded.
C = constant for 20oC
E = voltage rating of winding under test
kVA = rated capacity of winding under test

C = 1.5 for tanked, oil-filled transformers
C= 30 for un-tanked, oil-filled transformers
C= 30 for dry or compound filled transformers

Regulators

Use the same formula as for tanked oil-filled transformers.

Cables

Refer to the Insulated Power Cable Engineers Association (IPCEA) regarding minimum values of insulation for various types of cables and conductors.

REFERENCE
OIL SAMPLING AND TESTING

Created by: M. Rideout
Revised by: B. Ropson
Reviewed by: G. Samms
Approved by: G. Samms

MSR013-1: Thiefs For Sampling

A convenient and simple thief for obtaining oil samples from drums can be made from a piece of PVC or EMT, with the upper end suitable for covering with the thumb and the lower end cut at an angle to allow a good representative sample of the oil to flow into the thief. The thief should be kept clean and free from moisture and, when not in use, it should be kept in a dry place with precaution taken to avoid contamination.

MSR013-2: Sampling From Drums

Samples should not be drawn from drums indoors until the oil is at least as warm as the surrounding air. Otherwise, condensed moisture may lower the dielectric strength of the oil.

Drums should be placed in the upright position and left long enough for any impurities, water, etc., to fall to the bottom of the drum. The top of the drum should be wiped clean before the bung is removed. When first loosening the bung, a hissing sound should be heard, indicating that the drum has been airtight. The sample should be examined for free water and, if any exists, the water should be removed from the drum before obtaining another sample for the dielectric test.

To obtain an oil sample from a drum, the top hole of the thief is covered with the thumb, the thief quickly thrust to the bottom of the drum, and the thumb removed. When the thief is filled, the thumb is replaced and the thief is quickly withdrawn and the contents allowed to flow into the sampling receptacle. The oil should not be allowed to flow over the hand or fingers before it flows into the sampling receptacle, so as to avoid any possible contamination.

MSR013-3: Sampling From Equipment

When taking samples from equipment care should be taken to obtain a sample that fairly represents the oil at the bottom of the tank.

A sufficient amount of oil should therefore be drawn off before the sample is taken to ensure that the sample will not be that which was stored in the drainpipe.

If equipment is installed outdoors, care should be taken to prevent contamination of the sample by rain, snow, etc.

MSR013-4: Samples for Shop Testing

For oil samples that are to be tested in the shop, glass bottles are recommended as containers. Glass can be easily inspected for cleanliness and it allows visual inspection of the oil before testing, particularly with regard to free water and solid impurities. The bottles may be either cork stoppered or fitted with screw caps having a cork or aluminum liner or insert. Bottles having rubber gaskets or stoppers should not be used. Oil can easily become contaminated from the sulphur in rubber. The container should be large enough to provide sufficient oil for the required testing. It should be cleaned, if necessary, by rinsing thoroughly with clean oil or lead-free gasoline and it should be identified as to the piece of equipment from which it was taken.

REFERENCE
OIL SAMPLING AND TESTING

MSR013-5: Samples for Field Testing

Oil samples for testing on site are taken in the same manner as for shop testing. However, instead of using a container for transportation of the sample to the shop, the sample is put directly into the test cup of the oil tester and immediately tested according to the procedures outlined later.

MSR013-6: Sampling for Laboratory Analyses

General

The sampling device, which can be used to take either oil or gas samples, consists of a 50ml glass syringe terminated with a Luer-Lok fitting, to which is attached a plastic three-way valve. This valve, although removable, is an integral part of the syringe. A second identical valve, which does not stay with the syringe, is used when taking oil samples and is referred to as the auxiliary valve.

An adapter must be made that can be fitted to the transformer valve and which will accept the tapered inlet of the auxiliary sampling valve. One possibility, shown in Figure 1, is to epoxy a female Luer-Lok hub into a suitably sized hole drilled into the transformer valve plug.

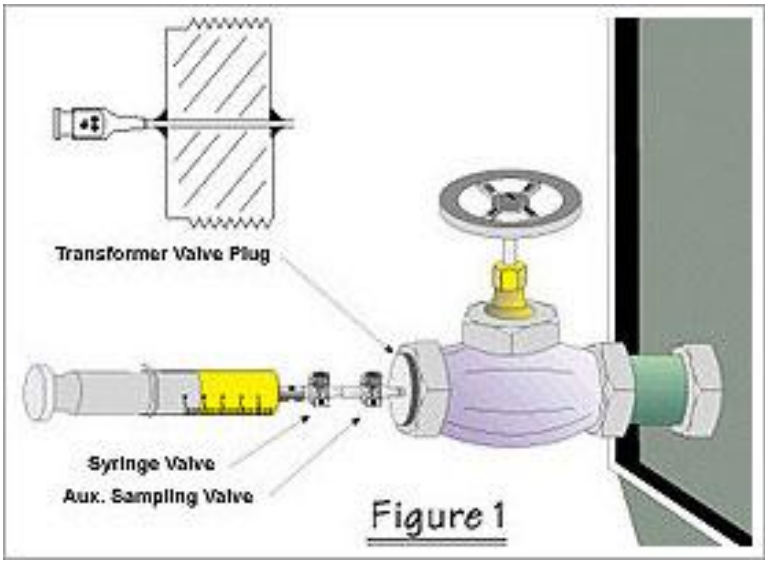

Figure 1: A Female Luer-Lok Hub Epoxyed Onto the Transformer Valve Plug

TJH2B Sampling Procedures

The following is some general guidelines for oil sampling and shipping from TJH_2B Analytical Services:

- Obtain a sample as per the instructions below.
- For TCA™, TASA™ & BOA™ analysis two samples are required – a syringe and a one liter bottle. Only use syringes provided by TJ/H2B (Do not use those owned by the Company or provided by Morgan Schaffer.)
- TASA™ & BOA™ analyses are based on trends, so the **initial** sample must be taken after the tapchanger or breaker has been maintained. If the oil is replaced during the maintenance process then the sample cannot be taken until three to six months later. Filtering does not affect the test, so samples can be taken immediately after completion of any maintenance that includes oil filtering.

REFERENCE
OIL SAMPLING AND TESTING

- TCA™ analysis does not require that the transformer be initially maintained. However, if the transformer is being maintained then the sample should be taken after the transformer has been placed back in service. The same rules as above apply for oil replacement and filtering.

- A label should be placed inside the control cabinet indicated the type of sample taken and the date. This will be helpful for TASA™ & BOA™ analyses since diagnostic samples can only be taken after an initial "Return to Service Test" has been done.

- If the sample has been taken after performing maintenance, it should be indicated on the form that it is a "Return to Service Test". Regular annual diagnostic tests should be indicated as "Routine".

- Complete a "Sample Data Sheet" and appropriate analysis form (TCA™, TASA™ & BOA™) for each sample set. In the case of an OLTC transformer two sets of samples are required – one for the transformer and one for the tapchanger. Therefore, two Sample Data Sheets and both the TCA™ and TASA™ forms must be completed for an OLTC transformer.

- Send a copy of all forms completed with the sample and retain another for your records.

- Package the sample in a cardboard or plastic box with a little absorbent cloth or sponge. For additional security you may place the sample inside a plastic bag. Place a Fragile sticker on the box.

- **If the sample contains >50PPM PCB**, follow the Dangerous Goods Regulations. Pack the sample in double insulation and absorbent. There must be sufficient quantity of absorbent to absorb all the oil should it leak. The proper label with UN code and Dangerous Goods paper should be given to the Courier.

- Ship the samples via air courier **as soon as possible** (within a maximum of 2-3 days) after being taken. **This is imperative to ensure accurate test results.** If a number of units are being maintained at the same time, either take samples after all maintenance has been completed or ship each sample set separately.

Note: TCA™ – Transformer Condition Assessment
TASA™ – Tapchanger Activity Signature Analysis
BOA™ – Breaker Oil Analysis

TJH2B Bottle Oil Sampling

1. Connect the sampling equipment to the oil-filled electrical apparatus and allow ½ liter of fluid to flush through the sampling equipment, and then into a waste container for later disposal. This procedure is to verify that no contaminants and residue will be analyzed in the lab sample.

2. Fill the bottle to its entirety

3. Assign an ID number to the bottle and record the number on the bottle label. Typically we use the syringe ID or another unique identifying number.

4. Write the Sample ID Number from the bottle label onto the report sheet.

5. Complete the information on the report sheet and prepare the sample for shipment.

REFERENCE
OIL SAMPLING AND TESTING

TJH2B Syringe Sampling

Glass syringes can be used effectively to collect oil samples from transformers. To obtain a representative sample it is necessary to use the proper sampling technique. Following the procedure below will ensure that the sample received by the laboratory is reflective of the oil in the main tank of the transformer.

Note: The procedure below assumes the use of plastic tubing for extracting the oil sample. If using a syringe adapter plug, follow the same technique, ignoring instructions that are specific to the use of plastic tubing. Specific adapter plug instructions are contained in the Morgan Schaffer syringe sampling section.

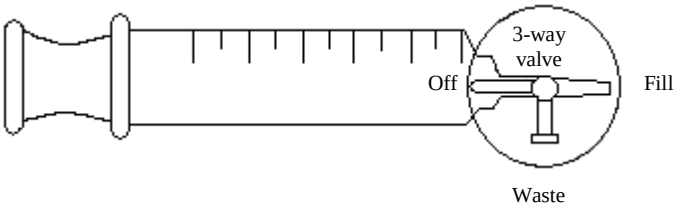

1. Stagnant oil from the lower drain valve of the transformer must be removed before the sample is collected. Also, moisture that may be present in the depression of the drain valve must be removed. To achieve this, remove the plug from the drain valve and drain approximately one half to one gallon of oil into an oil waste container.

2. To the lower drain valve, attach a plug fitted with a tubing connector and a section of plastic tubing.

3. Attach the syringe to the plastic tubing. With the three-way valve in position 1, open the valve on the transformer and completely fill the plastic tubing with oil. Allow the oil to flow into the oil waste container.

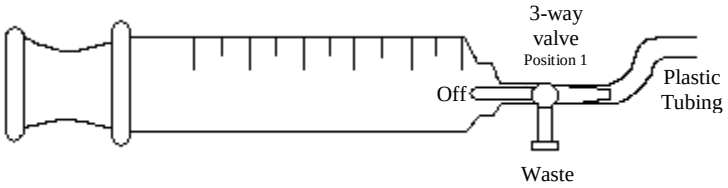

4. Place the three-way valve in position 2 and allow the syringe to fill to approximately 2/3 capacity. Control the rate of filling by applying a slight pressure with the thumb against the plunger of the syringe.

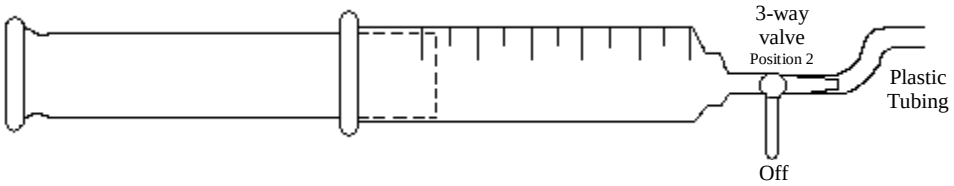

5. With the three-way valve in position 3, discharge the oil and any air bubbles from the syringe to the oil waste container. This will flush the syringe.

REFERENCE
OIL SAMPLING AND TESTING

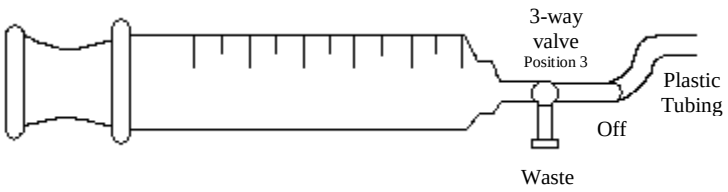

6. Repeat steps 4 and 5 once more.

7. After flushing the syringe, repeat step 4. Remember to apply a slight resistance to the flow by applying pressure to the plunger. This will prevent premature degassing of the oil.

8. Fill the syringe to 2/3 of its capacity (40ml) and place the three-way valve in position 1.

Note: (1) Do not fill the piston manually since this can result in atmospheric leakage and bubble formation.
(2) Do not fill the syringe to more than 27cc to ensure an adequate seal along the piston.

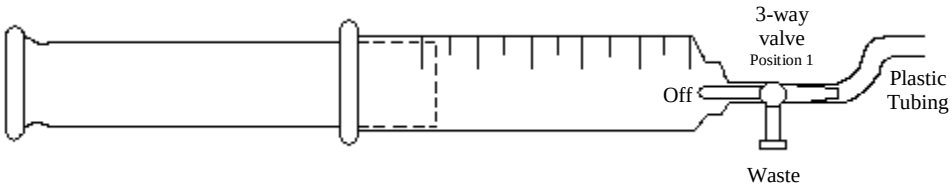

9. Close the transformer drain valve and remove the plastic tubing.

10. Remove the plug with the tubing connector from the drain valve.

11. Replace the original plug on the drain valve. Apply pipe dope on the plug threads to insure a good seal and prevent rust.

12. Write the Sample ID Number from the syringe label onto the report sheet.

13. Complete the information on the report sheet and prepare the sample for shipment.

Morgan Schaffer Syringe Sampling

A satisfactory technique for taking bubble-free oil samples is shown in Figures 1 and 2. The technique described requires the oil to be under a slight positive pressure. Note that a continuous oil flow is maintained throughout the entire procedure.

1. To obtain a good representative sample of the oil that is circulating in the transformer, take the sample from a radiator drain valve. If for some reason the sample is to be taken from the main tank drain valve, drain off sufficient oil to get rid of the oil that is in the drainpipe.

2. Attach the adapter plug to the transformer valve, then, with it's handle in the flush position, plug in the auxiliary valve and allow oil to flush until all trapped air is eliminated. Adjust the oil flow to a suitable rate and then attach the syringe with its valve in the fill position (Figure 2.1).

REFERENCE
OIL SAMPLING AND TESTING

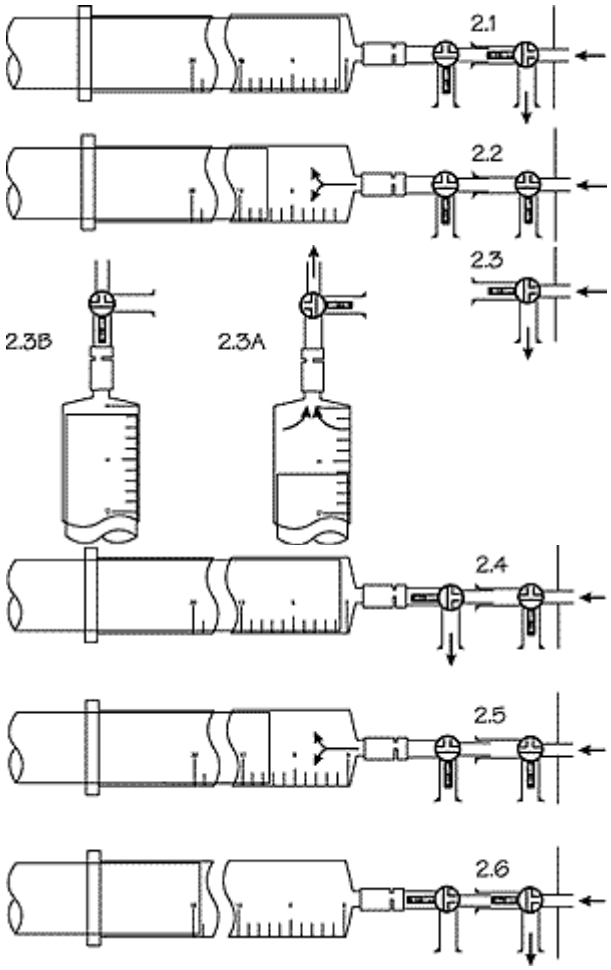

Figure 2: A Technique for Taking Bubble-Free Samples

3. Turn the auxiliary valve to the fill position and allow about 10cc of oil to enter the syringe (Figure 2.2). Return the auxiliary valve to its flush position and separate the syringe (Figure 2.3).

4. With the syringe vertical, eject any air bubbles (Figure 2.3A) and then depress the piston to the zero mark and close the syringe valve (Figure 2.3B).

5. The syringe, bubble-free and with its dead volume filled with oil, is then reattached to the auxiliary sampling valve. The auxiliary valve is then turned to the fill position so that oil flows from the flushing port of the syringe valve (Figure 2.4).

6. Turn the syringe valve to the fill position and allow oil pressure to push the piston back until the syringe contains approximately 26cc of oil (Figure 2.5). Note that, if following this procedure for a TJH2B sample, the syringe should be filled to the 40cc mark.

Note: (1) Do not fill the piston manually since this can result in atmospheric leakage and bubble formation.
(2) Do not fill the syringe to more than 27cc to ensure an adequate seal along the piston.

7. Return syringe and auxiliary valves to their flush positions. Separate the syringe and turn off transformer valve.

REFERENCE
OIL SAMPLING AND TESTING

8. Write the Sample ID Number from the syringe label onto the report sheet.

9. Complete the information on the report sheet and prepare the sample for shipment.

Morgan Schaffer Gas Sampling

As for oil sampling, it is required that the gas be under a slight positive pressure. The only auxiliary equipment required is a short length of 4.8mm (3/16 in.) rubber tubing and a 22 gauge hypodermic needle. No auxiliary valve is needed.

The needle is attached directly to the syringe valve. One end of the rubber tubing is pushed on over the end of the gas detector relay bleeder tubing on the transformer. In some cases the bleeder tubing may be shorter and smaller than normal, in which case an assistant may be required to hold the rubber tubing in place.

When the gas detector relay bleeder valve is first opened, a small amount of oil will flow before any gas is released. When the gas begins to come, close the valve and, to eliminate the possibility of losing all the gas before a sample is obtained, close the end of the rubber tube (either by an assistant holding it closed or by tying a knot in the tube). Open the bleeder valve and insert the needle through the tube wall. Gas will be forced into the syringe, causing the plunger to be pushed back. Sufficient gas should be discarded by withdrawing the needle and emptying the syringe to ensure that the final sample represents gas from the relay and not from the connecting tubing.

On the final fill the syringe should not be allowed to fill to more than 15cc to ensure an adequate seal along the piston. The syringe valve is then closed and the needle withdrawn from the tube.

MSR013-7: Oil Dielectric Testing (ASTM D-877)

1. The electrodes in the test cup should be checked with the 2.54mm (0.100 in.) gauge provided, and then locked in position.

2. The electrodes and the test cup should be wiped clean and thoroughly rinsed with clean oil. Lead-free gasoline can be used if necessary. Care should be taken not to touch the electrodes or the inside of the cup after cleaning, so as to avoid possible contamination.

3. If the sample being tested is taken from a bottle, the bottle should be shaken gently and the oil swirled several times before filling the test cup. This allows for any impurities present to be thoroughly mixed with the oil. Too rapid agitation is undesirable as it introduces air into the oil.

4. The test cup should be filled with oil to a height of not less than 20mm (3/4 in.) above the electrodes.

5. The test cup should be rocked gently a few times to allow any entrapped air to escape. The oil should then be left to stand in the cup for three minutes before testing.

6. Voltage should be applied and increased uniformly at a rate of approximately 3kV per second until breakdown occurs, as indicated by the tripping of the circuit breaker. Momentary discharge, which does not result in a permanent arc, may occur; these should be disregarded.

7. The report should include the breakdown voltage of the sample and, if tested outdoors, the type of weather and the approximate temperature of the oil at the time of the test.

REFERENCE
OIL SAMPLING AND TESTING

MSR013-8: Acidity Test

The following procedure is a general guideline for dielectric testing. Refer to the manufacturers instructions for tester-specific procedures.

We require the acidity level in power transformers to be below 0.1 and, in all equipment, to be below 0.3.

Using the Gerin Acidity Kit, the following procedure should be completed to test the insulating oil for acid content:

1. Pour oil into the glass cylinder up to mark 30.
2. Add neutral solution to approximately mark 50.
3. Insert stopper and shake vigorously for about 30 seconds.
4. Observe the color of the solution.

If the solution turns pink, the solution has an acid number of 0.1 or less and we record it as 0.1.

If the solution does not turn pink in the first test, the oil sample has an acid number of more than 0.1 and another test should be made using oil up to mark 10, topped up to mark 50 with a neutral solution and a no. 3 ampule added.

If this solution turns pink, the sample has an acid number of 0.3 or less and we record it as 0.3.

If the solution does not turn pink and it is still desirable to obtain the acid number, further tests using varying amounts of oil and ampules can be made as per the Gerin Acidity Kit instructions.

It is only necessary to do an acidity test to determine whether or not the oil should be discarded if it is suspected to be contaminated with water or sludge.

REFERENCE
PAINT

Created by: M. Rideout
Revised by: B. Ropson
Reviewed by: G. Samms
Approved by: G. Samms

MSR014-1: Paint Condition

The following descriptions are used for reporting paint condition of equipment:

Good - No repairs required.

Fair - Minor touch-up given and requires a complete paint job.

Bad - Requires painting immediately or as soon as possible.

MSR014-2: Equipment Painting

Rust and scales will absorb and hold moisture; therefore, in order to obtain a durable finish, it is absolutely essential that no moisture or foreign residues be sealed in by the application of paint.

New paint can be applied over old paint if the surface is clean and dry. For exposed steel surfaces, clean the damaged portion by means of a scraper or emery cloth, apply a coat of primer paint and allow it to dry, then apply a coat of finish paint.

On transformer radiators, extreme care must be taken when preparing rust or damaged spots for painting. When rust and scales are disturbed on this very thin metal, leaks will likely develop that are either impossible to repair or will require major welding. Superficial rust can usually be removed without causing any further damage. However, rust that has penetrated deeply into the metal and has formed into scales will present complications. It may be more practical to paint over this scale-type rust and, while closely monitoring their condition, make preparations for their removal for repairs or replacement.

For brush work, the paint should be applied without thinning; for spray work, a four-part paint to a one-part thinner by volume is recommended.

The standard paint for our equipment is Canadian General Electric Glyptal in red primer, and green or gray finish paint. For touch-up work on galvanized steel, there are several brands of cold galvanizing available in spray cans. Zinc-it and Zinc-rich are two that have proven satisfactory.

For painting inside the substation buildings containing high-voltage energized equipment, a water-based paint, such as Rust-O-Crylic 5700 System Coatings, will be used.

Note: Major painting and/or blasting will be done by an approved third party if possible.

REFERENCE
POTENTIAL TRANSFORMERS

Created by: G. Mayo
Revised by: B. Ropson
Reviewed by: G. Samms
Approved by: G. Samms

MSR015-1: Power Factor and Core Excitation Testing

Power Factor Testing

When using the Model ALFA-10 Power Factor Test Set from Multi-Amp, do the tests outlined in the Multi-Amp CAT. NO. 810280 for insulation testing of a two winding transformer. Use a maximum voltage of 1000 volts. The results we are interested in are the H.V. to ground results in test 5[*] G[R+B]. Record the results on form MSF011, showing test voltage, amps, power factor, capacitance and loss.

Core Excitation Testing

Do the test outlined in Multi-Amp CAT. NO. 810280 for excitation current testing of a two winding transformer. Do not exceed the rated voltage of the unit to be tested. Record the results on MSF011, showing the voltage, current and power factor.

Refer to Multi-Amp CAT. NO. 810280 for interpretation of the results. When in doubt contact the Substation Asset Management Group.

MSR015-2: Drying

When drying this unit the following general procedure will be used:

1. Remove the oil.
2. From the bottom, fill the unit with dry air to 3 psi.
3. Let stand for four hours.
4. Purge dry air out through top for five minutes while refilling from bottom to 3 psi.
5. Repeat steps 3 and 4 at least four times.
6. Repeat tests, power factor and/or dew point.
7. If the unit is acceptably dry, continue with step 8, otherwise repeat steps 3 to 6.
8. Refill the unit with oil by pulling a vacuum of 1.5 torr (Note: do not exceed manufacturer's recommended vacuum) on the top and filling through the bottom. Filling should commence as soon as the required vacuum is reached.

ALNOR®

DEWPOINTER OWNER'S MANUAL

ALNOR DEWPOINTER

OWNER ' S MANUAL

MODELS 7000-U

7200-U
7280
7300
7300-D
7350

IF AN ACCIDENT DESTROYS YOUR DEWPOINTER - - -

If you have an accident that destroys your Dewpointer, try to find the brass fog chamber. It alone is important because it may contain a small piece of foil with Radium 226 or Americium 241 material that must not be abandoned. Look into the fog chamber to see whether a small rectangular (1/2" x 5/8") piece of thin metal is present within the chamber. If there is no foil and both caps are tightly in place, the instrument was made without any radioactive material, and no further precautions are needed. If one cap is loose or missing, look along what was the left-hand wall of the chamber to see whether there is evidence of a short threaded stud or of a wire that was soldered to the wall.

In the face of evidence that there was Radium 226 or Americium 241 material within the chamber, search the debris with a Geiger counter and locate the piece of radioactive material. Use tweezers or pliers to handle it and put it in a small jar or plastic box that can be sealed with tape. Put the small radiation label on that box and pack it inside of a heavy corrugated board box measuring 6" x 8" x 8". Put the larger label on this outer box and then pack the whole assembly in a large substantial box measuring 14" x 14" x 16" and ship to the Alnor Instrument Company.

If the foil containing Radium 226 or Americium 241 was observed within the fog chamber, examine the chamber to see whether it still has the small radiation label on it. If not, paste a new small label on the fog chamber and then pack the chamber and its panel into a suitable cardboard box. Put the larger of the two labels on the outside of this box. Pack this inside a larger corrugated board box that will be the shipping box. This requires the regular shipping labels and should be sent to:

ALNOR INSTRUMENT COMPANY
7555 N. Linder Avenue
Skokie, Illinois 60077

WARRANTY

Your warranty information and reply card are enclosed elsewhere in this package. After locating this material, please return the reply card and maintain the Certificate of Calibration.

TRADEMARKS

The following are Trademarks of the ALNOR Instrument Company:

ALNOR
AL-TEMP
BALOMETER
COMPUFLOW
DEWPOINTER
DIGICON
DIGITHERM
PYROCON
PYRO LANCE
PYROMATIC
PYRO POINT
PYROTAC
PYROTROLLER
THERMOCON
VELOMETER
VELOMETER JR.

Entire Contents-Copyright 1983, 1989 by

ALNOR INSTRUMENT COMPANY
Skokie, Illinois 60077

PREFACE

Prior to this time, each type of Dewpointer was supplied with its own unique Owner's Manual. In this present work, one manual has been prepared to serve the owners of all types of Dewpointers presently being manufactured. The table of contents shows the scope of coverage which is widely inclusive, with many figures, graphs and tables. There are also lists of replacement parts for each type of Dewpointer.

Up until January 1, 1980, Alnor had used radium as an ionizing agent for several decades, and numerous references are made to its presence, and warnings are included in several of the sections. After January 1, 1980, the use of radium was discontinued except if specifically ordered. More recently another change was made; Americium 241 was substituted for Radium 226 on all units built after June 1, 1989. If your unit has Radium 226 or Americium 241, the radiation warning symbols will be on the fog chamber and on the back side of the case. Alnor operates under a license from the Illinois Department of Nuclear Safety which promulgated the Rules and Regulations covering the uses of radioactive materials in Illinois. If your unit does not have Radium 226 or Americium 241, ignore the references to it in this manual.

SPECIAL NOTE REGARDING DEWPOINTERS CONTAINING Am-241

If your Dewpointer uses Americium 241 as an ionizing agent, the Nuclear Regulatory Commission requires that it be wipe/leak tested every 3 months. The test involves obtaining a test kit from a firm authorized to provide this material, and which can also evaluate the results. The test itself is a quick and simple "wipe" of the exterior of the gas outlet which can be done at the location where the Dewpointer is being used. Firms which can supply the materials and perform the verification are located in most major metropolitan areas; Alnor can supply names of these companies in your area if necessary.

The frequent repetition of explanations, suggestions and cautions in the various sections was purposeful. It provides emphasis, and prevents frequent turning to sections other than the one being studied.

TABLE OF CONTENTS

SECTION		PAGE
	Preface	2
I	Introduction	6
II	Principle of Operation	7
III	Use of the Dewpoint Calculator	12
IV	Preparing a Dewpointer for Use	13
V	Using Type 7000 and 7280 Dewpointers	16
VI	Using Type 7200 and 7350 Dewpointers	20
VII	Using Type 7300 and 7300-D Dewpointers	24
VIII	Repairing a Dewpointer	31
IX	Required Leak Testing of Dewpointers	35
X	When You Have to Ship a Dewpointer	35
XI	When an Accident Destroys a Dewpointer	36
XII	How to Dispose of an Old Dewpointer	38
XIII	Maintenance and Service Notes	39
XIV	Technical Appendix	68

LIST OF FIGURES

FIGURE NUMBER	DESCRIPTION	PAGE
1	Type 7000 Dewpointer	17
2	Type 7200 Dewpointer	21
2A	Type 7300 Dewpointer	25
3	K to Q Conversion Curve	78
4	Q-value of Gas Mixtures	79
5	Effect of Q-value on Dew Point	80
6	Vapor Pressure & Density	81
7	Vapor Pressure & Density	82
8	Dew Point at Higher Pressure	83
9	Psychrometric Chart, Low Dew Point	84
10	Psychrometric Chart, High Dew Point	85
11	Errors Due to Super-cooling	9
12	Schematic Diagram 7000	59
13	Schematic Diagram 7200	60
14	Schematic Diagram 7350	61
15	Scale Cards for Type 7300-D	28

LIST OF FIGURES

FIGURE NUMBER	DESCRIPTION	PAGE
A	Oil Refill Assembly	44
B	Purging Valve Assembly	45
C	Operating Valve	46
E	Ratio Gauge Assembly (for 7000)	47
E2	Ratio Gauge Assembly (for 7300-D)	49
F	Pump Assembly (for 7000)	50
G	Rupture Fitting Assembly	52
H	Inlet Valve Assembly	53
I	Automatic Relief Valve	54
J	Reservoir Assembly	55
K	Filter Assembly	56
K1	External Filter Assembly	57

LIST OF TABLES

I	Types of Dewpointers	7
II	Q-values of Industrial Gases	11
III	Source Pressure for Type 7200	13
IV	Temperature Ranges (for 7300-D)	28

I. INTRODUCTION

The family of Alnor Dewpointers provides a wide selection of unusually precise instruments for determining the dew point temperature of air, heat-treating atmospheres or process drying gases (See Table I). The maximum range of temperatures that can be measured is from about 10 °F (5 °C) below room temperature to about -80°F (-60°C). The actual limits depend on the type of instrument, the nature of the gas or atmosphere, the presence of Radium 226 or Americium 241, and the initial temperature of the gas within the fog chamber. Table I lists the current models of Dewpointers, and their maximum measuring limits. The direct-reading scales have limits that differ from the maximums listed, but the scales are pictured in Figure 16. Operating instructions for the various types of instruments will be found in later sections of this manual.

The next section describes the principle of operation of the Dewpointer and answers most of the questions which arise during the use of these instruments. Every Dewpointer contains a battery and a transformer so the instrument can be operated from its internal battery or from the A-C line. The available A-C voltage must be known when the instrument is ordered because the change from a voltage rating of 115 volts to a rating of 230 volts cannot be made in the field. The required voltages for the battery and the A-C line are marked on the front panel.

Dewpointers in the 7300 series contain an electric resistance thermometer instead of a glass thermometer. This series always uses the battery to provide the small power needed to operate the electric thermometer. When the battery is exhausted, the operator cannot measure the temperature of the fog chamber. When the Dewpointer is used in places where the ambient temperature is changing 3 to 4 °F (2-3 °C) per hour, the electric thermometer provides better accuracy than does the glass thermometer.

TABLE I

TYPE NO.	Maximum Measuring Limits: From 10°F (5°C) below room temperature to:	DESCRIPTION
7000 U	-80°F (-60°C)	Standard construction
7200 U	-80°F (-60°C)	Has no pump
7280 U	-80°F (-60°C)	For use with oxygen
7300 D	-80°F (-60°C)	Has direct reading removable scales
7300	-80°F (-60°C)	Standard construction

To achieve the limits listed above, Dewpointers must contain foil containing Radium 226 or Americium 241 to ionize the air or gas being measured. When no radioactive material is present the lower limit of measurement is reduced to about -10°F (-23°C), when measuring clean gases. If gases contain small amounts of charged particles or dust particles (normally present in ambient air), the lower limit of measurement may be extended depending on the amount of particles, (When measuring clean gases refer to Figure 11 for approximate correction factors.)

II. PRINCIPLE OF OPERATION

A thorough understanding of the principle of operation of the Dewpointer will aid in using the instrument. The gas to be treated is forced into the observation chamber at some pressure above atmospheric. This sample of gas is allowed to stabilize its temperature for about 15 or 20 seconds after which time it will be at the temperature of the fog chamber. When measuring clean dry gasses a minimum of 60 seconds should be allowed so that adequate ionization of the gas occurs. The gas is rapidly exhausted to the atmosphere with a sudden expansion and simultaneous cooling of the gas that remained in the chamber. If the cooling is sufficient to bring the temperature of the gas down to or below the dew point, water vapor will condense in the form of a fine mist or fog. This fog can be seen readily through the observation window because of a light located below the fog chamber and focused at the top of the chamber. When a fog forms, it appears as what users call "a cone of sunbeams".

When the pressure is released from the fog chamber by depressing the operating valve, expansion and cooling of the gas occur so rapidly that there is no time for heat to be added to or subtracted from the gas. The isolation of the main body of the gas permits the valid application of a simple formula expressing the relation between temperature and pressure during an adiabatic expansion.

$$\text{Final Temp.} = \text{Initial Temp.} \left(\frac{\text{Final Pressure}}{\text{Initial Pressure}}\right)^{\frac{K-1}{K}}$$ where all values

are in absolute units and $K = \frac{\text{specific heat at constant pressure}}{\text{specific heat at constant volume}}$

For the Alnor Dewpointer, the final temperature is the dew point temperature ($t_{D.P.}$). The ratio (P.R.) between the final pressure and initial pressure can be read directly on the pressure ratio gauge without necessity of knowing the individual quantities.

$$\text{By definition } Q = \frac{K-1}{K}$$

The equation for an adiabatic expansion can, therefore, be converted into the following form for our purpose;

$$t_{D.P.} = (t_1 + 460)\ (P.R.)^{Q} - 460$$

when the temperatures are in degrees Fahrenheit.

and $$t_{D.P.} = (t_1 + 273)\ (P.R.)^{Q} - 273$$

for Celsius.

Since the initial temperature (t_i) is read on the thermometer, P.R. is read on the pressure ratio gauge, and Q is a constant that depends on the gas being tested, the solution for the dew point temperature ($t_{D.P.}$) is perfectly straightforward though somewhat cumbersome. In actual use, a calculator is supplied that makes the above computation extremely simple.

The formation of a visible fog at the dew point temperature depends on the presence of dust in the gas to act as nuclei around which the droplets can form. In practically all cases dust is present. If, however, gas is completely dust free (such as gas produced by fractional distillation) it would be possible to cool the gas below the dew point temperature without condensing the moisture.

CORRECTION FACTORS

(APPROXIMATE)

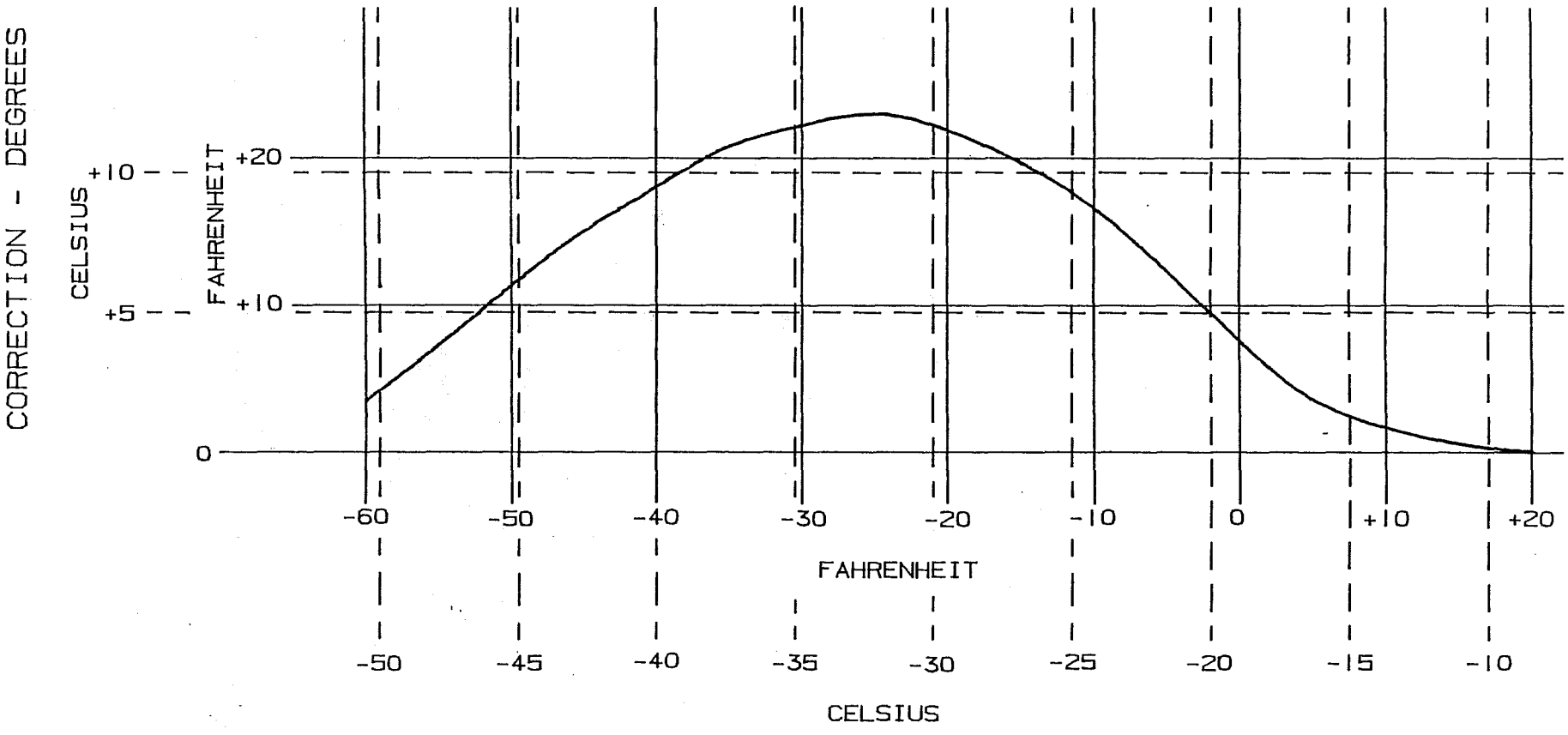

OBSERVED DEW POINT - DEGREES

FIGURE 11

PUB-NP-064, Attachment E
Page 1371

This is referred to as "supercooling" and it is a serious source of error in the attempts to measure low dew point temperatures (Figure 11). It is in the effort to eliminate this kind of error that Alnor uses Radium 226 or Americium 241 to ionize the gas in the fog chamber and provide charged particles upon which water vapor can condense and develop a fog.

The error becomes noticeable at about zero degrees F (-18°C). A rough idea of errors introduced by supercooling can be seen in Figure 11 where the errors are very small from the higher temperatures down to 10°F (-12°C). Since the development of a fog through the action of supercooling is not a really precise phenomenon, the curve shown is just to give an estimate of the magnitude of the errors that are possible. When Radium 226 or Americium 241 is present in the fog chamber, it ionizes the gas and provides ionized nuclei around which droplets form to create fog. This action virtually eliminates the phenomenon of supercooling if the operator waits long enough for ionization to occur after a sample has been put into the fog chamber. With very dry gas, this might be two or three minutes.

However, because of increasing concern about the use of even small amounts of radioactive material, Alnor discontinued its use after January 1, 1980. The only exceptions are where it is ordered by the purchaser, and all legal requirements are met.

Many legislatures have passed laws requiring that every piece of equipment containing any radioactive material he marked with a distinctive symbol referred to as the "radiation symbol". In addition, some states require that each radiating device be registered or even licensed. To facilitate compliance with such laws, Alnor furnishes the required symbols and data pertaining to the small amount of Radium 226 or Americium 241 contained in some of the Dewpointers. This is done to comply with the radioactive materials license under which the company operates. Technically speaking, the radioactive Dewpointers contain either "One fixed source having seven (7) microcuries of Ra 226 in solid form", or "One fixed source having 35 microcuries of Am 241 in solid form".

As will be shown in Section III, it is necessary to know the Q value of a gas before its dew point can be calculated. The Q value is a natural constant of the gas and may be regarded as a measure of its cooling power. This can be illustrated by comparing two gases having widely differing cooling powers. Ethane has Q = .165 and air has Q = .285. Say that they were forced to cool through a given temperature range, from 75°F down to -40°F (equivalently, 24°C to -40°C). To cool air through this range, it must be compressed to 43.4 psi. (300 kPa), and then suddenly released to atmospheric pressure. To cool Ethane through this same temperature range it must be compressed to 89.1 psi.(615 kPa), and then suddenly released to the atmosphere. The large pressure range through which the Ethane must be expanded is indicative of its lower cooling power. In a practical sense, the cooling power of air is almost twice that of Ethane.

The following table lists the Q values of many common gases.

TABLE II

GAS	SYMBOL	Q VALUE
Air		.285
Argon	A	.400
Carbon Dioxide	CO_2	.225
Carbon Monoxide	CO	.285
Dissociated Ammonia		.285
Endothermic		.285
Ethane		.165
Exothermic		.285
Helium	He	.400
Hydrogen	H_2	.285
Methane	CH_4	.240
Nitrogen	N_2	.285
Oxygen*	O_2	.285
Propane		.139
Sulfur Hexafluoride	SF_6	.082
Other Gases	Refer to chemical handbooks.	
Gas Mixtures	Refer to the Appendix	

*Alnor offers its standard Dewpointers in versions especially prepared for use with pure oxygen. These contain special seals, lubricants and manometer fluid.

III. USE OF THE DEW POINT CALCULATOR

To use the Dew Point Calculator, P/N 116-001-005, the following values must be known:

1. Q value of the gas.
2. The initial temperature of the gas as read on the thermometer on the Dewpointer.
3. The pressure ratio required to just produce a fog.

When "Q" Value is 0.2855

Set arrow 1 at initial temperature, ^{o}F or ^{o}C, on Scale E. Opposite the observed pressure ratio on Scale D, read dew point on Scale E.

EXAMPLE: Air is being tested so the Q value is .2855. The thermometer reads 75°F (24°C). A fog appears at a pressure ratio of .46, but does not appear at .47, therefore, the end point is .465.

1. Set the arrow "1" opposite 75 on scale "E" .
2. Opposite .465 on Scale "D", read the dew point temperature of -30°F (-35°C) on the Scale "E".

When "Q" Value is not 0.2855

Set arrow 1 at initial temperature, ^{o}F or ^{o}C, on Scale E.

Set arrow 2 at "Q" value on Scale A.

Opposite the observed pressure ratio on Scale B, read equivalent pressure ratio on Scale C.

Opposite the equivalent pressure ratio on Scale D, read the dew point on Scale E.

EXAMPLE: Pure methane is being tested. The Q value is .24. The initial temperature is 80°F (27°C). A fog appears at .51 but does not appear at .52, so the end point is .515.

1. Set arrow "1" at 80°F on Scale E.

2. Set arrow "2" at .24 on Scale A.

3. Opposite .515 on Scale B, read equivalent pressure ratio as .57 on Scale C.

4. Opposite the equivalent pressure ratio .57 on Scale D, read dew point as 0°F (-18°C) on Scale E.

IV. PREPARING THE DEWPOINTER FOR USE

7300

All Dewpointers are made for use with A-C power or battery power to operate the light which illuminates the fog. Each new Dewpointer is furnished with a suitable, 2-terminal, 6-volt lantern battery (Alnor Part No. 556-047-014) and a power cable, No. 458-021-000, for 115 volts or a power cable, No. 458-022-005, for use on 230 volts. The large Dewpointers, 7300 Series, contain an electric thermometer and in these the battery furnishes the power to operate the electric thermometer. These Dewpointers cannot be used unless a good battery is installed.

During shipment, air bubbles often become entrapped in the manometer fluid of the pressure ratio gauge. Before using the Dewpointer, please refer to the Maintenance and Service Notes, Section XII, and follow the instructions for removing the air bubbles that may be hidden in the reservoir.

Connections

When A-C power is required, use the line cable furnished and connect the Dewpointer to a convenient source of 50 or 60 Hz., at the voltage shown on the nameplate. Remember that all Series 7300 Dewpointers require battery power to operate the electric thermometers even though the lamps are being fed from the A-C line. Please note that modern electric codes require that plugs and receptacles be constructed in special ways determined by the line voltage and by the load current. The cords furnished with Alnor Dewpointers meet the present code requirements.

Connect the inlet fitting of the Dewpointer (lower edge of panel) to the source of gas. Stainless steel tubing is best although Teflon® tubing may be used. Fully tighten all connections. When pressure at the source is appreciably above atmospheric, put a control valve, such as a needle valve, in the supply line to hold down the pressure applied to the Dewpointer. (Do not use a pressure regulator; they tend to retain moisture if they are the conventional diaphragm type).

When the Dewpointer being connected for use is either Type 7200 or Type 7350, a good needle valve is definitely required in the gas supply line to control the input of gas to the Dewpointer. All of the other types of Dewpointers have manually operated pumps to allow the application of controlled pressures to the fog chambers but the Types 7200 and 7350 are dependent on the pressure available at the source of the gas to be tested. The pressure built up in the fog chamber is adjusted by the use of a needle valve. Table III shows the required pressure for use with a few gases at three different dew point temperatures.

TABLE III. SOURCE PRESSURE FOR TYPE 7200

Lowest Dew Point Temperature		He or Ar		Air, N_2 O_2 or H_2		CO_2	
F	C	psi	kPa	psi	kPa	psi	kPa
0°	-18°	7.1	49	10.3	71	14.3	99
-40°	-40°	12.7	88	21.5	148	30.1	208
-80°	-80°	21.5	148	34.6	239	55.8	385

When the gas being tested is dirty, put into the supply hose an external filter (556-050-000) that requires the same filter medium (040-050-000) as the filter in the panel.

The outlet fitting on the rear of the Dewpointer may be connected to a suitable waste line, if desired. When the gas being tested is hazardous, exhaust it into a suitable discharge hose that will allow the back pressure to remain at essentially atmospheric.

Adjustments

Make the Unity Adjustment on the pressure ratio gauge as follows:

1. Place operating valve in its out position.
2. Open purging valve to release all internal pressure.
3. Depress gauge valve at top of pressure ratio gauge and turn the Unity Adjuster until the bottom of the meniscus is even with the "1" mark.
4. Release the gauge valve.

Close the purging valve and pump up the pressure to about .5 on the pressure ratio gauge. Open the purging valve and watch for the fluid to return to the "1" mark. If it does not quite settle at the right level, repeat the Unity Adjustment. The flexible diaphragm in the fluid reservoir sometimes takes a "set" during a period of prolonged idleness but pressurizing and releasing it a few times will correct the unstable Unity Adjustment unless the diaphragm has actually been stretched. When the diaphragm has been damaged, it may be impossible to complete making the Unity Adjustment. A diaphragm can be replaced in the field if one has a new diaphragm and some extra manometer fluid to refill the reservoir. See Section XII for notes on maintenance and service.

19

In the Type 7300 Series of Dewpointers, it is necessary to adjust the electric resistance thermometer so that it will give an accurate measure of the temperature of the fog chamber.

1. Turn the meter selector switch to "GALV" .
2. The pointer should reach "Z". If necessary, adjust the small screw in the center of the meter panel.
3. Turn the meter switch to "TEST".
4. Press down the pushbutton switch, turning the "T-CONTROL" to make the meter pointer indicate "T".
5. Release the pushbutton and turn the meter switch to "TEMP".
6. Read the temperature of the fog chamber by pressing down on the pushbutton.

A reminder about temperature changes

All Alnor Dewpointers have glass or electric thermometers that will indicate changes in the ambient temperature and these changes must be recognized when preparing to calculate a dew point temperature. Do not assume that the ambient temperature is constant.

The indications of the pressure ratio gauge are influenced by both the temperature and the barometric pressure. To avoid errors from this source, frequently make the Unity Adjustment as the Dewpointer is being used.

V. USING THE TYPE 7000 SERIES DEWPOINTER

Having made all of the adjustments and the connections described in Section IV, "Preparing a Dewpointer for Use", the instrument is ready for its intended use. Open the purging valve and pull up on the handle of the operating valve.

NOTE: If the Dewpointer has just been transferred from an environment where the temperature was 10° or 15°F (5° or 10°C) different from the temperature of the present room, allow time for the temperature of the fog chamber to stabilize.

1. Place the power switch in position "AC" or "BATTERY" according to the power source to be used. Pump the gas to be tested through the instrument to flush out all the air that was in the tubes and the fog chamber. Use at least 15 strokes of the pump to get two complete air changes. When measuring the dew points of very dry gases, purge the system more thoroughly. Be sure to flow enough gas into the instrument to have flushed it with the gas to be tested.

2. Close the purging valve and pump a sample of the gas into the instrument, bringing the pressure ratio gauge to about .7 as a guess in the absence of any other information. If the approximate value of the dew point is known, the reverse operation of the calculator will indicate the approximate pressure ratio that may be used for the initial trial. This will further reduce the number of trials required to obtain the end point. When the sample gas has been pumped in, allow 15 or 20 seconds for it to cool to the temperature of the fog chamber. If you are measuring a clean dry gas allow at least 60 seconds for this step. (The gas is heated during pumping but cools if left standing). Look in the window of the fog chamber and press down the operating valve. This performs three functions in the following sequence:

    a. It closes the line from the inlet fitting and the pressure ratio gauge.

    b. It turns on the light.

    c. It rapidly opens the exhaust line from the fog chamber to the atmosphere.

    If a cone of fog appears, it indicates the sample of gas was cooled below the dew point and more trials are needed at higher pressure ratios. Purge the chamber with about 25 strokes of the pump when there has been a fog. Continue with similar trials at larger pressure ratios until a ratio is reached where no fog appears. Then try a slightly lower ratio until a fog appears. Close in on the end point which is the maximum pressure ratio that will just barely produce a fog. With some practice it is possible to get two pressure ratios very close together where the smaller ratio gives a faint fog and the larger one gives no fog.

Figure 1

Type 7000

In cases where the end point seems to be shifting in value toward the smaller pressure ratios even when the test gas is known to be stable in its composition, this has been found to be due to incomplete purging of the sampling tube and the Dewpointer itself.

3. When making the last trial near the end point, wait at least 60 seconds for the sample of gas to cool after it has been pumped up to the desired pressure ratio. Then press down on the handle of the operating valve. With some experience, an operator will find that he can determine the end point very easily if he begins with pressure ratios that are too small and uses the density of the fog on any trial as a guide to the selection of his next trial pressure ratio. When two critical pressures as described above are determined, take the numerical average and call that the true end point.

4. Having determined the end point, read the temperature on the thermometer and look up the Q value of the gas being tested. With these numbers, use the Dewpointer Calculator to compute the dew point temperature as described in Section III. Experience has shown that about three independent determinations should be made just to prove that the system has been properly purged and that the dew point temperature is not drifting downward due to the further drying of the connecting hose or tubing and the inside of the Dewpointer.

5. When measuring the dew point of very dry, clean gas such as compressed, bottled gas, allow at least 60 seconds for the ions to form in the gas compressed into the fog chamber before pressing on the operating valve. When very little moisture is within the gas and very little radioactive material is inside the fog chamber, it takes time for the generation of enough ions to fill the chamber and thereby permit the formation of a visible fog. With a deficiency of ions, it may not be possible to get a visible fog even at the correct pressure ratio. The operator would logically compress the gas more in order to get a fog and determine the end point. This would result in the determination of a dew point that is much too low. The gas was cooled too much because the proper fog was not seen at the end of 15 or 20 seconds. The waiting time after compression may have to be extended to two or three minutes. These very thorough measures should be taken in determining the true end point after the simpler steps have shown the approximate end point. Only when measuring negative dew point temperatures is it necessary to allow the extra time for ionization of the compressed gas in the fog chamber.

Concerning the Type 7280 Oxygen Dewpointer

This type of Dewpointer is mechanically like the Type 7000 Dewpointer and the operation is just as described for the Type 7000. The Type 7280, however, is safe to use with oxygen because it has special lubrication, special O-rings, and special gaskets and other sealing components. Oxygen is a very active gas that can combine with many substances such as oils, greases and fuel gases so very rapidly as to be explosive. Therefore, Dibutyl Phthalate, which does not readily oxidize, is used in the pressure ratio gauge. The special parts for the Oxygen Dewpointers are shown at the end of the Section XII. When ordering spare parts, be sure to use the correct numbers for the Oxygen Dewpointer parts. A mistake at this point could have very serious consequences.

VI. USING THE TYPE 7200 SERIES DEWPOINTER

Type 7200 Dewpointers are intended for those applications where the gas to be tested is supplied under pressure with 50 psig (345 kPa) being adequate for nearly all situations. Three factors determine the minimum useful pressure of the gas being supplied;

(1) The minimum dew point to be determined.

(2) The Q value of the gas under pressure.

(3) The current barometric pressure.

Assuming a local barometric pressure of 29.92 inches of mercury (760 mm Hg) and a fog chamber temperature of 75°F (24°C), minimum supply pressures in psig and kPa are shown in Table III.

Actual pressures built up in the fog chamber must be controlled by a good needle valve placed in the supply line between the Dewpointer and the source. This valve will limit the flow into the fog chamber and permit the operator to set the pressure ratio gauge to the selected value. Do not use a pressure regulator because it holds moisture.

The rear outlet fitting of the Dewpointer may be connected to a suitable waste line that will not build up any back pressure.

Adjustments

Very carefully make the Unity Adjustment on the pressure ratio gauge. Failure to follow these steps in proper order may cause the manometer fluid to be blown out the top of the gauge.

(1) Close the supply line flow-control needle valve.

(2) Place the operating valve in the out position.

(3) Open the purging valve.

(4) Press the gauge valve. While this valve is depressed turn the adjuster until the bottom of the meniscus of the fluid column is on the 1.0 mark.

(5) Release the gauge valve.

Warning

Never depress the gauge valve unless the operating valve is out and the purging valve opened and the supply line valve closed.

The Unity Adjustment should be checked frequently - particularly if the instrument temperature or barometric pressure is fluctuating.

Figure 2

Type 7200

Operations

Open the purging valve. Pull up on the operating valve handle. Turn the switch to the A-C or BATTERY position according to the power source that is to be used. Flow the test gas through the instrument tubing and fog chamber to purge them. Open the inlet valve and adjust the flow rate so that the pressure ratio gauge indication is about ".8". Permit the gas to flow through the instrument at this rate for a couple of minutes. This will flush out the atmospheric air in the instrument. This purging operation is required whenever the instrument has not been used for several hours.

No further adjustments of the flow-control valve will be required. All further operations will be on the panel of the instrument. Close the purging valve and permit the pressure ratio indication to climb to approximately mid-scale. Close the inlet valve.

NOTE: The Alnor Dewpointer Type 7200 is equipped with an automatic pressure relief valve that operates at approximately 60 psi (415 kPa) in the case of the 7200-U.

If the pressure in the instrument exceeds this value the relief valve will open and by-pass the gas directly to the outlet. This makes possible the use of a needle valve (instead of pressure regulator) at the source of a high pressure gas.

If the pressure of the gas source exceeds the pressure at which the relief valve opens it is natural for gas to be flowing from the discharge of the instrument whenever the inlet valve is closed. The instrument is also equipped with a pressure rupture disc which will rupture at approximately 200 psig (1380 kPa), thus completely protecting the instrument against over-pressure hazards.

Look into the observation window and depress the operating valve; observe whether a fog (cone of sunbeams) appears. Depressing the operating valve performs three operations in the following sequence:

(1) Closes the line between the fog chamber and the pressure ratio gauge.

(2) Turns on the light.

(3) Opens the line from the fog chamber to the atmosphere.

If a fog forms, it indicates that the sample was cooled below the dew point, and the next trial should be made at a greater pressure ratio (lower pressure). If a fog does not form, it indicates that the sample was not cooled to the dew point and the next trial should be at a lesser pressure ratio (higher pressure).

Open the purging valve; pull out the operating valve; open the inlet valve. Maintain the flow for five or ten seconds to flush out the old sample.

Make additional trials until you have located one pressure ratio at which a fog appears and one at which no fog appears. Now "close in" on the "end point" - the point at which a fog can barely be produced. You should be able to narrow the difference between the appearance and the non-appearance of the fog to only one minor division apart on the gauge. The experienced operator will find he can determine the end point after a few trials since the density of the fog on any given trial is a valuable clue to how far he is from the end point.

If the approximate value of the dew point is known, the reverse operation of the Dew Point Calculator will indicate the approximate pressure ratio which should be used for the initial trial. This will further reduce the number of trials required to achieve the end point. Be sure to repeat the five to ten second purging operation between trials.

For calculation purposes, take the average between the minimum pressure ratio that fails to produce a fog and the maximum pressure ratio that produces a fog. Use this value with the initial temperature as read on the thermometer and the Q value for the gas being tested to compute the dew point with the Alnor Dew Point Calculator. See Chapter III on how to use the Calculator.

When measuring dew point temperatures in the negative region, be sure to allow time for the radioactive material to ionize a large amount of gas in the fog chamber; let the gas remain in the chamber to become ionized for at least two minutes before pressing down on the operating valve. When the dew point is minus 20°F (-30°C) and below, the fog becomes thin and wispy; it swirls around in the center of the chamber and fades rapidly.

VII. USING THE TYPE 7300 SERIES DEWPOINTER

In the 7300 Series Dewpointer, there are three different types that deserve special mention. The 7350 Dewpointer is much like the Type 7200 described previously in that it requires that the source of the gas to be tested to be pressurized up to perhaps 55 psi (380 kPa). The instrument for measuring the temperature of the fog chamber is an electric resistance thermometer instead of the glass thermometer used in the 7000 or the 7200 series of instruments. The 7300-D Dewpointer is like the 7300 instrument except that it has removable scales that are placed behind the pressure ratio gauge to provide the desired range of measurement without the need to use the Dewpointer Calculator. These scale cards are shown in Figure 16; one card carries the familiar pressure ratio scale.

The Type 7300 Dewpointer has a range like the 7000-U but it has the electric resistance thermometer to measure the temperature of the fog chamber. It also has a fine-wire thermopile inside the chamber to show when the gas has cooled to the same temperature as the walls of the fog chamber. Follow the instructions in Section IV in preparing the 7300 for use.

When the preparations and connections are completed, open the purging valve and pull up on the handle of the operating valve. If the instrument has just been transferred from another room where the temperature was 10 or 15 degrees different from the temperature of the present room (5-10 C), allow time for the temperature of the fog chamber to stabilize as shown by the resistance thermometer.

1. Place the power switch in position A-C or BATTERY according to the power source to be used. Pump the gas to be tested through the instrument to flush out the air that was in the tubes and the fog chamber, using at least 15 strokes of the pump to get two air changes. When measuring the dew point of very dry gases, purge the system more thoroughly. Be sure to flow enough gas through the system to have it flushed and filled with the gas you want to test.

2. Close the purging valve and pump a sample of the gas into the instrument, bringing the pressure ratio gauge up to the .7 mark in the absence of any other information about the probable dew point. Turn the selector switch on the temperature indicator to "GALV" and watch the pointer return to its "Z" point. This shows when the gas has reached the temperature of the wall of the chamber. If clean dry gas is being measured wait at least an additional 45 seconds before proceeding. Move the selector switch to "TEST", press the pushbutton and watch

Figure 2A

Type 7300

the pointer move to the "T" point on the scale. If necessary, turn the "T-ADJUSTER" knob to center the pointer on the "T" point. Move the selector switch to "TEMP" and read on the meter the temperature of the fog chamber.

Look in the window of the fog chamber and press down the handle of the operating valve.

3. If a cone of fog appears, it indicates that the gas was cooled below the dew point and more trials are needed at higher pressure ratios. Purge the system with about 25 strokes of the pump when a fog has appeared. Continue with similar trials at higher pressure ratios until a ratio is reached where no fog is seen. Then try a slightly lower ratio until a fog appears. Close in on the end point which is the largest pressure ratio that will just barely allow a fog. With some practice, it is possible to get two ratios very close together where the smaller ratio gives a fog and the higher ratio gives no fog. Take the average of these two ratios and use that as a measure of the true end point. This can be used with the dew point calculator to determine the dew point temperature.

4. When making the last trials near the end point, be sure to wait until the gas has reached the temperature of the walls of the fog chamber before pressing the operating valve. An operator may find that he can arrive at the end point more easily if he begins with pressure ratios that are too small and uses the density of the fog on any given trial as a guide to the next pressure ratio he should try.

5. When measuring very low dew points and getting close to the end point, allow long times to elapse after the gas is compressed into the fog chamber so that the gas can get thoroughly ionized. When only a very small amount of water vapor is in the sample of gas, many ions are required to provide a visible fog. At $-50^{\circ}F$ ($-45^{\circ}C$), the time of waiting for the establishment of equilibrium conditions has been 3 minutes.

Preparing and Using the Type 7350 Dewpointer

This instrument contains no pump and therefore it requires that the gas to be tested be supplied from a pressurized source. Refer to Section VI and follow the steps for connections and adjustments. The following must be added to the adjustments for the meter:

1. Turn the selector switch on the meter to "GALV".

2. The pointer of the meter should rest at the "Z" point. If necessary, correct it by turning the small screw just above the switch handle.

3. Set the power switch to "BATTERY". Turn the selector switch to "TEST" and press the pushbutton.

4. The pointer should move to the "T" point. If necessary, turn the "T-ADJUSTER" to center the pointer at "T".

5. Turn the switch to "TEMP" and read the temperature of the fog chamber.

Operations

Open the purging valve and press down on the handle of the operating valve. This will allow the purging air to flow through the fog chamber and thus clear it out. Flow the test gas through the instrument to purge it, allowing the gas to flow for two or three minutes especially when the dew point is expected to be in the negative region. Continue with the second paragraph under "Operations" in Section VI.

It will be noticed that the various manipulations of the Type 7350 are a combination of those for the Type 7200 and the Type 7300. At -20°F (-30°C), a recommended waiting time for the generation of an adequate number of ions is at least 1-1/2 minutes. This addition to the technique of measuring low dew points has been found to provide more reliable measurements. It eliminates the need for super-cooling the gas in order to obtain a fog. The number of degrees of super-cooling appears as an error in the measurement.

When an end point has been established, use this ratio, the Q value for the gas, and the initial temperature of the fog chamber to compute the dew point on the Calculator as described in Section III of this manual.

Preparing and Using the 7300-D Dewpointer

The 7300-D Dewpointer resembles the 7300 instrument in all respects except that its manometer block is hollowed out behind the liquid column to accept the detachable scales. There are two special knurled screws to hold each scale in place. One of the scales is marked in units of pressure ratio and when it is installed, the 7300-D is used in exactly the same manner as the 7300. The other three scales are marked directly in temperature, either °F or °C, as ordered. The Fahrenheit scales are shown in Figure 15; Celsius scales are similar. Select the proper scale by referring to Table IV and considering both the starting temperature and the probable dew point.

TABLE IV

Use Scale No.	For Ambient Temperatures	Range of the Dew Point Temperatures
1	50° to 120°F	-60°F to 10° below ambient
	10° to 50°C	-50°C to 5° below ambient
2	90° to 120°F	-10°F to 10° below ambient
	30° to 50°C	-25°C to 5° below ambient
3	60° to 90°F	-30°F to 10° below ambient
	15° to 30°C	-35°C to 5° below ambient
4	30° to 60°F	-50°F to 10° below ambient
	0° to 15°C	-50°C to 5° below ambient

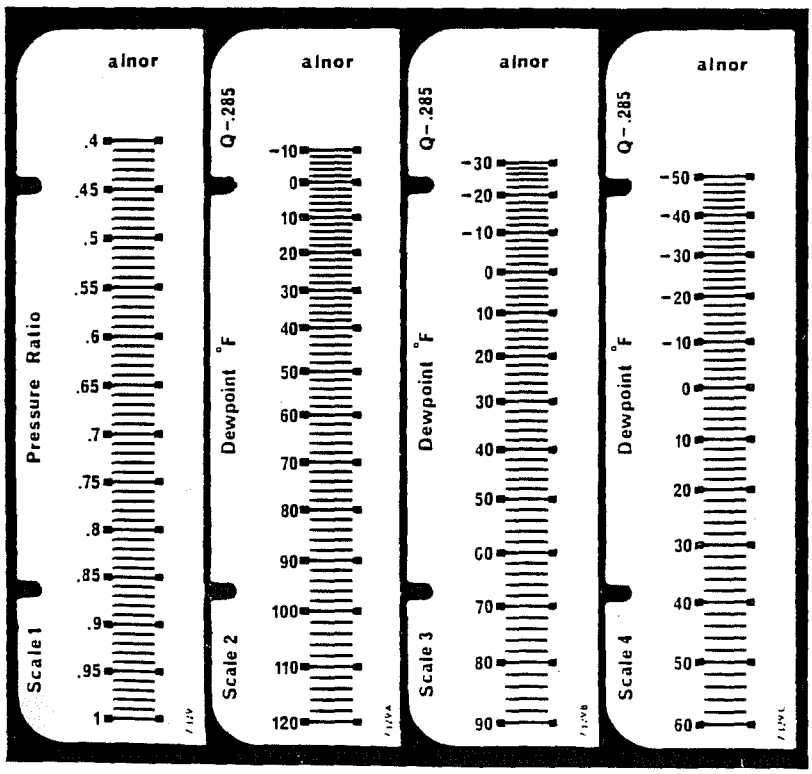

Figure 15.

Scale Cards for Type 7300-D

Install the chosen scale and tighten the two screws by fingers only. Follow the steps given for the 7300 regarding the connections and adjustments. Measure the temperature of the fog chamber with the electric thermometer and set the controls as follows:

(1) Open the purging valve.

(2) Raise the handle of the operating valve.

(3) Depress the gauge valve.

(4) Turn the Unity Adjuster knob to bring the fluid column to the measured fog chamber temperature.

(5) Release the gauge valve.

Remember that the direct reading scales are accurate only for the gases having Q value of .285 as listed in Table II.

Leave the meter switch in the "GALV" position when it is not being used for the other two functions. It will let the meter indicate small temperature differences between the gas and the fog chamber.

Put the toggle switch in the A-C position if power is available from the line. Open the purging valve; pull out on the operating valve; and adjust the flow control valve, if present, to cause the gauge liquid to rise no more than one division on its scale.

Pump the gas through the Dewpointer to purge it for about 5 minutes if it has had moist air in it and the expected dew point is $-30^{o}F$ ($-35^{o}C$) or below. Purging is very important at the low dew points (Scales #2 and #3) because moisture given off by the tubing may cause errors until the tubing is dried.

Close the purging valve and pump a sample into the fog chamber, increasing the pressure until the fluid column rises to the anticipated dew point temperature. Wait at least 15 or 20 seconds for the gas to cool after it has been pumped up; with clean dry gasses at least 60 seconds is required. Look into the observation window and push down on the operating valve. If a fog appears it indicates that the gas has cooled below its dew point and it should be tested again with lower pressures - a shorter gauge column.

If no fog appears, the gas did not cool down to its dew point, so it will have to be tested again starting with a higher pressure - longer gauge column. It will be observed that the higher pressures (longer gauge column) coincide with lower dew point temperatures on all three temperature scales. Open the purging valve; pull out on the operating valve; for about one minute operate the pump to purge the chamber.

It may have been noticed that when gas is pumped into the fog chamber the meter pointer moves upscale briefly and when the valve is pressed down the meter deflects downscale. These deflections show qualitatively the temperature changes in the gas due to compression and expansion. They also tell when the gas has returned to the fog chamber temperature.

The goal in using the 7300-D Dewpointer is to determine the pressure in the manometer that will produce a barely visible fog in the cone of light. This pressure is the end point that is read as Degrees Fahrenheit on Scales #2, #3, and #4. Having found a pressure that will produce a very slight fog and a little different pressure that produces no fog, it is usually possible to get these two points to be about one division apart on the temperature scale.

When checking for the final end point, there are some details which deserve special attention:

1. Check the "Z" and "T" adjustments on the meter.

2. Measure the fog chamber temperature and using the Unity Adjuster, set the manometer column to indicate this same temperature.

3. Thoroughly purge the Dewpointer with the sample gas.

4. After pumping the sample into the fog chamber, let the gas stand in the chamber for awhile to become ionized by the radioactive material. When working near the lowest temperature on the three scales, wait one minute for Scale #2; two minutes for Scale #3; and three minutes for Scale #4. At the end of the waiting time, press down on the operating valve and observe the fog. This procedure will minimize errors when measuring very low dew points.

VIII. REPAIRING AND SERVICING THE DEWPOINTER

Because of the Radium 226 or Americium 241 inside the fog chamber of many Dewpointers, a person who has not been trained and licensed to work with Dewpointers containing either Ra-226 or Am-241 must not open the fog chambers containing radioactive foil. DO NOT OPEN THE FOG CHAMBER AND NEVER ALLOW A FINGER (OR ANY PART OF YOUR BODY) TO COME IN CONTACT WITH THE FOIL. Ship the Dewpointer to Alnor Instrument Company.

For shipping instructions, please refer to Page 35.

If there is no small rectangular foil fastened on the left-hand wall of the fog chamber, then it contains no Radium 226 or Americium 241 and the instrument can be completely serviced in the field.

SPECIAL NOTE FOR DEWPOINTERS CONTAINING AM-241

If your Dewpointer contains Americium 241 (look for Am-241 on the radiation label on the instrument case) it is subject to Nuclear Regulatory Agency requirements that it be tested for leaks every 3 months. See pages 2 and 35 of this manual for additional information.

Cleanliness is most important for a Dewpointer; keep your Dewpointer clean and well lubricated. Follow these specific steps:

1. Filter - Check the fiber glass filter material frequently and replace it as soon as it begins to darken. The dirt on the glass fibers holds moisture and will make it difficult to get a reproducible measurement of a low dew point temperature. Be sure the screen and disk are in place at the bottom of the filter barrel. If an external filter is being used, (see Figure K1) make sure all joints are tight and that the glass wool is clear white.

2. Bubbles in the Pressure Ratio Gauge - It is normal for bubbles to appear in the fluid column of the pressure ratio gauge after the Dewpointer has been transported or has been used to measure hydrogen gas. In the 7000 and 7300 Series of Dewpointers these bubbles can be freed by pumping up the column and then releasing the pressure with purging valve. It is helpful to turn the Unity Adjuster fully in and to tip the instrument about 45 degrees to the left while working the pump. Have the operating valve handle out and purging valve closed. Tipping the instrument case to the left while working the pump will release the bubbles.

Type 7200 and 7350 have no pump but pressure from the source of compressed gas can be used to raise the column of manometer fluid which can then be released by opening the purging valve. While pressurizing the instrument, keep the purging valve closed and carefully regulate the pressure with the inlet valve. Keep the case tilted to the left as pressure is admitted and advance the Unity Adjuster as gas is displaced from the fluid.

3. Replacing Lost Manometer Fluid - When fluid is accidentally blown out through the manometer valve, this valve must be removed and cleaned as in paragraph 7 below.

NOTE: DO NOT USE THE STANDARD FLUID WHEN REFILLING A DEWPOINTER USED FOR OXYGEN SERVICE.

Oxygen Dewpointers - use 556-044-032 fluid ONLY.

All other Dewpointers use 556-044-018 manometer oil.

New fluid must be added as follows:

a. Have the purging valve open and operating valve up.

b. Remove the knurled cap of the OIL REFILL and take out the needle screw.

c. Set the Unity Adjuster to its mid-position.

d. Tilt the instrument case to the left.

e. Depress the gauge valve and hold it while adding fluid to the filling well from the dropper spout on the plastic fluid bottle. Release the gauge valve before removing the spout from the well. Add fluid to bring the column up to the 1.0 mark of the manometer scale. Tighten the needle screw in place before attempting to operate the Dewpointer.

4. Leaks - To operate correctly, the Dewpointer must be free of leaks in its tubes, valves, and fittings. Pump the fluid column up near its top and close all valves. The height should remain fixed except for temperature changes, If the column drifts downward, try to observe the rate of drift. Press down on the operating valve and again observe the rate of drift.

a. If the fluid appears stable, the leak is in the fog chamber or the piping to it. Inspect the gaskets at the window and the lens. Tighten the caps by hand to compress their soft gaskets.

b. If the leak persists and seems a little faster with the operating valve pressed down, the leak is in the operating valve itself, the pump discharge valve or the tubing connections to the reservoir. The purging valve can be reseated by tightening the needle screw into the seat. Looseness in the packing of the operating valve can be taken up by tightening the top cap. The piping joints can be tested with a soap solution or "Leak-Tec" or "Seamtest Concentrate" solution.

c. When installing new filter material, be sure no glass fibers remain outside the chamber or under the gasket. A leak will contaminate the air sample.

The steps listed above are correct for Dewpointers in which there is a pump. The next steps are for Types 7200 and 7350.

d. There is a safety fuse or rupture disk under the panel behind the inlet fitting. The gasket within this must be in good condition; the disk must be unbroken; and the cap must be tight.

e. There is a safety relief valve behind the panel in the inlet line. This contains an O-ring seat and a brass plunger that is held against the seat with a spring. A flaw in any one of these components could cause a leak. See Figure I for details of this assembly.

f. The cap of the filter should be kept tight enough to compress the gasket and insure a good seal. When installing new filter material, be sure no glass fibers remain outside the chamber or under the gasket. This would allow a slow leak.

5. Operating Valve - The operating valve generally requires little maintenance aside from occasional tightening of the top cap. If it is necessary to disassemble the valve be sure to follow Figure C carefully when reassembling. Lubricate all parts with petroleum jelly before reassembling. Use the silicone grease for the oxygen Dewpointers.

6. Fog Chamber - If there is Radium 226 or Americium 241 in the fog chamber, just keep the window and lens clean and keep the end caps tightened by hand only. DO NOT OPEN THE FOG CHAMBER.

7. Ratio Gauge - If the manometer fluid is accidentally blown out through the gauge valve, this valve must be removed and washed with mineral spirits to dissolve the fluid. Remove the pushbutton assembly using an open end wrench. Use a 1/2" spanner or two small screwdrivers to unscrew the valve assembly from the manometer block. Do not try to operate the Dewpointer when fluid is low or the valve removed; the diaphragm may be damaged.

Refer to Figure E when replacing parts in the ratio gauge assembly. Be sure the O-ring is in place when inserting the manometer valve assembly. Tighten the valve against the O-ring just enough to prevent leaking but avoid cracking the block. Tighten the pushbutton assembly just enough to prevent turning since it does not seal against pressure. Leaks at the Unity Adjuster can be corrected by replacing the two O-rings or the complete adjuster. See Figure E. Because of the high coefficient of expansion of the manometer oil, frequent readjustment to the 1.0 mark is quite normal if the temperature is changing.

Warning about Oxygen Dewpointers

When servicing an oxygen Dewpointer, you must use the special O-rings, lubricant, and manometer fluid listed at the end of the Parts List. Using standard parts may ruin the pressure ratio gauge.

8. Reservoir - If the diaphragm is damaged (usually stretched) the fluid column in the pressure ratio gauge will not come up to the right pressure. Excessive pumping becomes necessary and the correct dew point cannot be obtained. The diaphragm is a Mylar Film. This material is very tough and it is most improbable that rupture will occur; however, depressing the gauge valve when the instrument is under pressure may stretch the diaphragm. This may also result from pumping when the Operating plunger is depressed. If this happens the diaphragm must be replaced. In most of these cases, the instrument should be sent back to the manufacturer for cleaning and repair.

IX. REQUIRED LEAK TESTING OF DEWPOINTERS WITH AMERICIUM 241

If your Dewpointer contains Americium 241 it must be wipe/leak tested every three months. This wipe/leak requirement is in accordance with regulations from the Nuclear Regulatory Commission and Agreement states Licensing Agencies. A wipe/leak test kit to perform the wipe/leak test must be obtained from a firm authorized or licensed by the Nuclear Regulatory commission or an Agreement State Agency to perform such test. When the kit is received, the Dewpointer should be wipe tested following the directions of the kit at the opening of the purging (gas outlet) valve. The wipe sample should then be returned according to the instructions supplied with the kit, to the firm which issued the kit. The results of the wipe test must be kept on file for review by the Nuclear Regulatory Agency or the Agreement State Agency.

X. WHEN YOU HAVE TO SHIP A DEWPOINTER

If your Dewpointer contains Radium 226 or Americium 241 in its fog chamber, it must be packed in a specified way to be shipped by common carrier. The Department of Transportation (DOT) and the International Air Transport Association (IATA) have rules that specify the kinds of labels which must be placed on the outside of packages containing what are broadly classified as "Hazardous Materials". Since a single Dewpointer contains only 7 microcuries of Ra 226, or 35 microcuries of Am 241, it is exempt from the colored labels on the outside of the packing box, but there must be two warning labels on the inside of the package.

The container actually holding the Radium 226 or Americium 241 (fog chamber) must have a label warning of the presence of radioactivity, and cautioning not to open the chamber and NEVER to touch the radioactive material. Also, the outer case of the Dewpointer must have a larger label that further describes the radioactive material, and carries other warnings. Both labels are required by law and were supplied by the Alnor Instrument Company. If either one is damaged or removed, it must be replaced. Alnor will furnish the replacement(s) if requested; meanwhile the instrument should not be used. Examples of the labels are shown on page 37; the wording on the labels will depend on whether your Dewpointer contains Radium (Ra-226) or Americium (Am-241).

Pack the Dewpointer in a sturdy wooden box or a corrugated cardboard box measuring at least 14" x 14" x 16" which needs only the usual shipping labels.

XI. IF YOU HAVE AN ACCIDENT WHICH DESTROYS YOUR DEWPOINTER

Try to locate the fog chamber. Look into it to see whether it contains the rectangular piece of Radium 226 or Americium 241 or whether it appears to have had the foil mounted within it. New Dewpointers have the foil mounted by nut on a stud; older Dewpointers have the foil soldered onto a piece of wire extending into the fog chamber. If a fire destroyed the instrument, the solder would have melted and the foil would be loose within the chamber.

Notice:

THIS FOIL MUST NOT BE LOST OR ABANDONED! !

Gather the remains of the panel and the fog chamber containing the foil and set them in a corrugated board box just large enough to hold the assembly. Attach a small warning label to the fog chamber if the original is missing. Tape the box closed and apply the larger warning label, pictured below, to the outside of this box. Pack this box in the center of a larger corrugated box measuring 14" x 14" x 16". This outer box requires only the regular shipping label - no warning label. Send this package to:

ALNOR INSTRUMENT COMPANY
7555 N. Linder Avenue
Skokie, Illinois 60077

If the Radium 226 or Americium 241 is not in the fog chamber, it can be located by means of a Geiger counter survey instrument. Even if it is covered with debris, the gamma rays will be discovered by the survey instrument and will lead to the piece of foil. It should be picked up with pliers and put into a small covered container of metal or plastic that can be taped shut.

DO NOT TOUCH THIS FOIL WITH FINGERS!!

Put the small warning label on the outside of this container and pack it inside a cardboard box measuring about 6" cube. Put the large warning label on the outside of this cubic box. Pack this box in the center of a larger corrugated box measuring 14" x 14" x 16" and send it to the Alnor Instrument Company at the above address. Use the regular shipping labels. If you know the serial number of the Dewpointer that was destroyed, please notify Alnor so that the records can be corrected.

FACSIMILES OF THE WARNING LABELS

SMALL LABEL FOR THE FOG CHAMBER

With Americium

CAUTION: RADIO-ACTIVE MATERIAL
35 MICRO-CURIES OF Am 241
DO NOT TOUCH

With Radium

CAUTION: RADIO-ACTIVE MATERIAL
7 MICRO-CURIES OF Ra 226
DO NOT TOUCH

LARGE LABEL FOR CASE OR INNER SHIPPING BOX

With Americium

CAUTION - RADIOACTIVE MATERIAL
Am 241 35 MICROCURIES
ALNOR INSTRUMENT COMPANY
7555 N. LINDER AVE., SKOKIE IL 60077

THE RECEIPT, POSSESION, USE, AND TRANSFER OF THIS ALNOR DEWPOINTER, MODEL _____, SERIAL NO. _____, ARE SUBJECT TO A GENERAL LICENSE OR THE EQUIVALENT, AND THE REGULATIONS OF THE NUCLEAR REGULATORY COMMISION OR AN AGREEMENT STATE. THIS LABEL SHALL BE MAINTAINED ON THE DEVICE IN A LEGIBLE CONDITION. REMOVAL OF THE LABEL IS PROHIBITED. SEE OWNERS MANUAL FOR SAFE INSTALLATION, OPERATION & SERVICING.

With Radium

CAUTION—RADIOACTIVE MATERIAL
Ra 226 7 MICROCURIES
ALNOR INSTRUMENT COMPANY
7555 N. LINDER AVE., SKOKIE, IL 60077

THE RECEIPT, POSSESSION, USE, AND TRANSFER OF THIS ALNOR DEWPOINTER, MODEL _____ SERIAL NO. _____ ARE SUBJECT TO A GENERAL LICENSE OR THE EQUIVALENT, AND THE REGULATIONS OF AN AGREEMENT STATE OR A LICENSING STATE. THIS LABEL SHALL BE MAINTAINED ON THE DEVICE IN A LEGIBLE CONDITION. REMOVAL OF THE LABEL IS PROHIBITED. SEE OWNERS MANUAL FOR SAFE INSTALLATION, OPERATION & SERVICING.

XII. DISPOSING OF AN OLD DEWPOINTER

Many Dewpointers contain Radium 226 or Americium 241 inside the fog chamber and they cannot legally be thrown into the trash or the junk pile. A person can look into the window at the top of the fog chamber to see if Ra-226 or Am-241 is present. It is a small, rectangular-shaped piece of thin metal fastened to the left-hand wall of the chamber either by means of a bolt and nut or by being soldered on the end of a projecting wire. When there is no such piece of radioactive material, the old instrument is not considered to be a hazardous substance.

When radioactive material is present within the fog chamber, the safest course of action is to pack the entire instrument in a wood box or a sturdy corrugated box measuring at least 14" x 14" x 16". Note that the size suggested is not determined by the size of the Dewpointer itself but is determined to provide adequate space between the piece of radioactive material and the outer surface of the box.

Before placing the old Dewpointer in its packing box, make sure that the fog chamber carries a small label such as is reproduced on the preceding page. Make sure the back of the Dewpointer case carries the larger label, also shown.

When the Dewpointer has been placed in its shipping box, close the box and affix only the usual shipping labels. Address the box to

ALNOR INSTRUMENT COMPANY
7555 N. Linder Avenue
Skokie, Illinois 60077

If your State has a program of dealing with hazardous materials in general or with radioactive materials in particular, it may be simpler and more convenient to contact the local State Agency for advice or a recommendation for legally disposing of the old Dewpointer.

XIII. MAINTENANCE AND SERVICE NOTES

The following notes should be studied by the operator before attempting to use the Dewpointer for the first time. They explain some of the technical points that were not in the instructions for the regular operation of the Dewpointer.

1. Filter - Check the fiber glass filter material frequently and replace it as soon as it begins to darken. This is important because the dirt on the glass fibers holds moisture. Be sure the screen and disk are in place at the bottom of the filter barrel.

2. Air in Pressure Ratio Gauge - Bubbles appear in the fluid column of the pressure ratio gauge after the instrument has been transported or has been used to measure hydrogen gas. These bubbles can be freed by pumping up the column and then releasing the pressure with the purging valve. It is helpful to turn the Unity Adjuster to near the top of its travel and to tip the Dewpointer about 45 degrees to the left while working the pump. Have the operating valve out and the purging valve closed. Tipping the instrument to the left or to the front will help purge the bubbles.

3. Replacing Lost Manometer Fluid - When fluid is accidentally blown out through the manometer valve, the valve must be removed and cleaned as in paragraph 7 below. New fluid must be added as follows:

   a. Have the purging valve open and the operating valve up.

   b. Remove the knurled cap of the OIL REFILL and take out the needle screw.

   c. Set the Unity Adjuster to its mid-position.

   d. Tilt the instrument case to the left.

   e. Depress the gauge valve and hold it while adding the fluid to the filling well from the dropper spout on the plastic fluid bottle. Bring the column up to the 1.0 mark of the manometer scale. Release the gauge valve before removing the spout from the well. Tighten the needle screw in place before attempting to operate the Dewpointer.

f. When refilling an oxygen Dewpointer, use only 556-044-032 manometer fluid. DO NOT USE THE STANDARD FLUID.

4. Leaks - To operate correctly, the Dewpointer must be free of leaks in its tubes, valves and fittings. Pump the fluid column up near its top and close all valves. The height should remain fixed except for temperature changes. If the column drifts down, try to observe the rate of the drift. Press down on the operating valve and again observe the rate of drift.

   a. If the fluid drifts down no further the leak is in the fog chamber or the piping to it.

   b. If the leak persists and seems a little faster with the operating valve pressed down, the leak is in the operating valve itself, the pump discharge valve, the purging valve, or the tubing connections to the reservoir. The purging valve can be reseated by tightening the needle screw into the seat. Looseness in the packing of the operating valve can be taken up by tightening the top cap. The piping joints can be tested with a soap solution or "Leak-Tec" or "Seamtest Concentrate" solution.

   c. When installing new filter material, be sure no glass fibers remain outside the chamber or under the gasket. A leak here will contaminate the air sample.

5. Operating Valve - The operating valve requires little maintenance besides occasional tightening of the top cap. When it is necessary to disassemble the valve, be sure to follow Figure C carefully when reassembling. Lubricate all the pieces with petroleum jelly in the standard instrument. Be sure to use the silicone grease on the oxygen Dewpointers.

6. Fog Chamber - Keep window and lens clean. If the fog chamber becomes dirty or corroded, send it to the manufacturer for cleaning and polishing. The Radium 226 or Americium 241 material is mounted in the fog chamber and is NOT TO BE TOUCHED OR BENT. Most state laws governing radioactive materials forbid the touching of such materials. They must be worked only by trained employees who are being monitored for radioactive exposure.

SPECIAL NOTE FOR DEWPOINTERS CONTAINING AM-241

If your Dewpointer contains Americium 241 (look for Am-241 on the radiation label on the instrument case) it is subject to Nuclear Regulatory Agency requirements that it be tested for leaks every 3 months. See pages 2 and 35 of this manual for additional information.

7. Ratio Gauge - If the manometer fluid is accidentally blown out through the gauge valve, this valve must be removed and washed with mineral spirits to dissolve the fluid. Remove the pushbutton assembly using an open end wrench. Use a 1/2" spanner or two small screwdrivers to unscrew the valve assembly from the manometer block. DO NOT TRY TO OPERATE THE DEWPOINTER WHEN FLUID IS LOW OR VALVE IS REMOVED; the diaphragm may be damaged.

   Refer to Figure E when replacing parts in the ratio gauge assembly. Be sure the O-ring is in place when inserting the manometer valve assembly. Tighten the valve against the O-ring just enough to prevent leaking but avoid cracking the block. Tighten the pushbutton assembly just enough to prevent turning since it does not seal against pressure. Replace two O-rings to stop leaks at the Unity Adjuster. Tighten the nut just enough to prevent turning since the block can be cracked easily.

   Warning about Oxygen Dewpointer

   When servicing an oxygen Dewpointer, you must use the special O-rings, lubricant and manometer fluid listed at the end of the Parts List. Using standard parts may ruin the pressure ratio gauge, and may cause an explosion.

8. Reservoir - If the diaphragm is damaged the fluid column in the pressure ratio gauge will not come up to the right pressure ratio. Excessive pumping becomes necessary and the correct dew point cannot be obtained. The diaphragm is a Mylar Film. This material is very tough and it is most improbable that a rupture will occur. However, depressing the gauge valve when the instrument is under pressure or pumping when the operating plunger is depressed, may stretch the diaphragm. If this happens the diaphragm must be replaced. In most cases the instrument should be sent back to the manufacturer for cleaning and repair.

9. Pump - All essential components of the pump are shown in Figure F. Basically there is a barrel, piston and four valves. The gas to be tested enters from the filter and some of it flows through a tube to the chamber above the piston. It is sucked into that part of the pump as the piston is pushed down. When the piston is raised, the gas passes out to the outlet fitting. This keeps the barrel walls covered with the gas under test, but that portion of gas may be contaminated with small amounts of outside air carried in on the piston rod. Uncontaminated gas passes through the two lower valves, the operating valve and into the fog chamber where it can be tested. One small particle of dirt in any one of these four valves will prevent the pump from working properly.
   a. To check the inlet valve (from the filter), set the fluid column at 1 on the scale. Pump ten full strokes and see whether the fluid column rises above .45. If more than twelve strokes are needed, the reservoir diaphragm is stretched or the inlet valve is leaking. Remove the nut and push the tubing to one side. Unscrew the valve screw and take out all the pieces of the valve. Clean them, and inspect for damage. Using Figure F, reassemble the valve, tighten the valve screw securely, and re-connect the copper tubing.

   b. To check the outlet valve (to the operating valve) pump up the fluid column to .4 on its scale and observe the fluid column. If there is a slow downward drift in two minutes and a faster drift after the operating valve is pressed, there is a leak in the outlet valve. Remove and clean the parts of the valve; reassemble the valve (see Figure F) .

   c. Keep the piston and O-ring clean, and lubricated with petroleum jelly. Replace the ring if it has any imperfections.

10. Oxygen Dewpointers - When ordering parts for the oxygen Dewpointers, ALWAYS specify that the parts are to be used in the oxygen meters. When performing service operations, avoid using the standard lubricant, manometer fluid, and O-rings. See the special parts lists at the end of the regular parts lists in this manual.

11. When the handle of the operating valve is pulled up while the purging valve is open, gas from a pressurized source will flow through the Dewpointer tubing and fog chamber to purge the system without using the pump. This flow will cause the fluid in the pressure ratio gauge to rise above the unity mark. A pressurized source should always have a needle valve in the supply line, and the flow (for purging purposes) should be limited so that the fluid does not rise above .95 on the scale.

12. Do not try to measure a gas that is corrosive to copper; the life of the Dewpointer will be shortened considerably.

13. When measuring the dew point of a very dry, clean gas where the dew point is at zero or below on the Fahrenheit scale, pump the sample into the fog chamber and allow it to remain there from one to three minutes to permit the gas to be ionized. Then press down on the handle of the operating valve. This will eliminate the need for supercooling the gas to create a fog, and will result in more accurate measurements.

On the next few pages are drawings showing cross-sections of the major sub-assemblies in the Alnor Dewpointers which can be serviced in the field. Many part numbers are given on the drawings but there are also itemized lists of parts used in the Dewpointers but not shown in a drawing.

There is one sub-assembly that must be serviced at the Alnor factory. This is the fog chamber that contains Radium 226 or Americium 241 material. Many states have laws prohibiting any person who has not been properly trained from working on items that contain radioactive materials. The fog chambers containing radioactive material must be returned to the Alnor Instrument Company where trained technicians know how to work with them.

When ordering repair parts for your Dewpointer, please state the type and serial number of your instrument. Changes in dimensions and in design have made some of the older instruments no longer repairable. Also, the need to comply with OSHA regulations and some electrical codes have dictated a few electrical and mechanical changes that are automatically made when an older instrument is sent in for repair.

OIL REFILL ASSEMBLY
(556-046-001)
FIGURE A

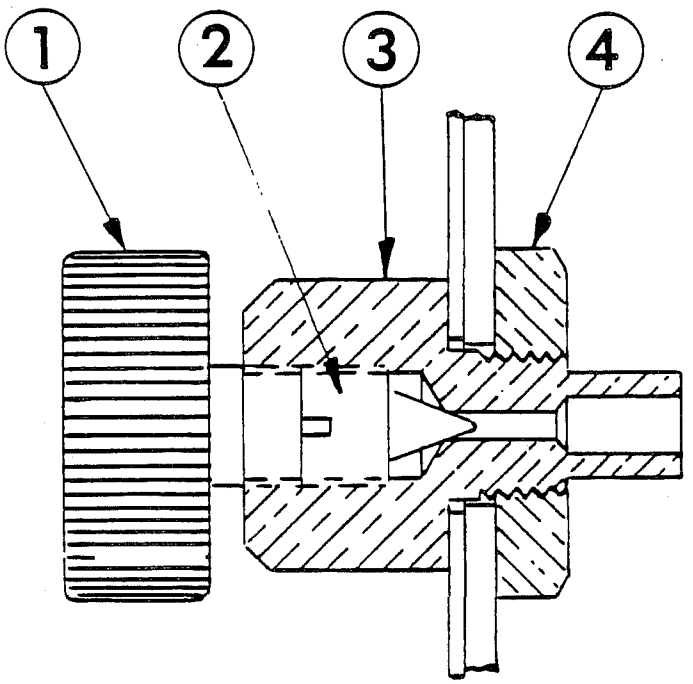

ITEM NO.	NO. REQ'D.	DESCRIPTION
4	1	REFILL VALVE NUT
3	1	REFILL BLOCK
2	1	NEEDLE SCREW
1	1	REFILL VALVE CAP

PURGING VALVE ASSEMBLY
(556-005-008)
FIGURE B

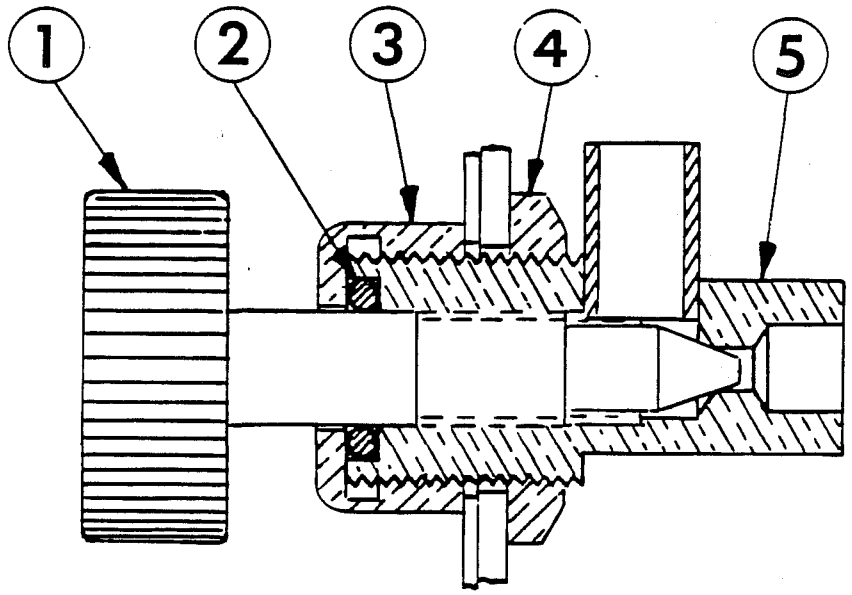

ITEM NO.	NO. REQ'D.	DESCRIPTION
5	1	PURGING VALVE ASSEMBLY
4	1	PURGING VALVE NUT
3	1	VALVE CAP
2	1	"O" RING
1	1	PURGING SCREW ASSEMBLY

OPERATING VALVE
(556-011-000)
FIGURE C

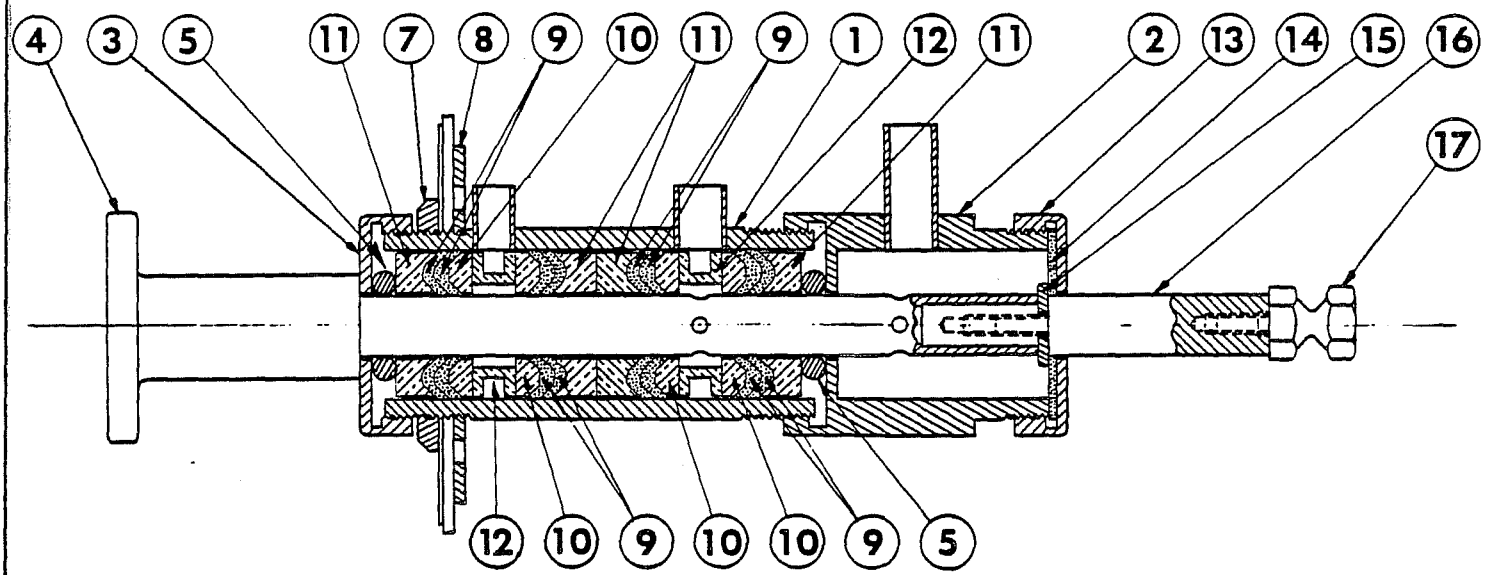

ITEM NO.	NO. REQ'D.	DESCRIPTION
17	1	SWITCH SCREW
16	1	VALVE EXTENSION
15	1	VALVE STOP WASHER
14	1	CHAMBER GASKET
13	1	VALVE CAP
12	2	VALVE SPACER
11	4	FEMALE V RING
10	4	MALE V RING
9	8	HYDRAULIC V RING
8	1	VALVE BARREL FLANGE
7	1	VALVE BARREL RING
6		NOT USED
5	2	O RING
4	1	PLUNGER ASSEMBLY
3	1	VALVE CAP
2	1	OPERATING CHAMBER ASSEMBLY
1	1	VALVE BARREL ASSEMBLY

RATIO GAUGE ASSEMBLY
FOR TYPES 7000, 7300
FIGURE E

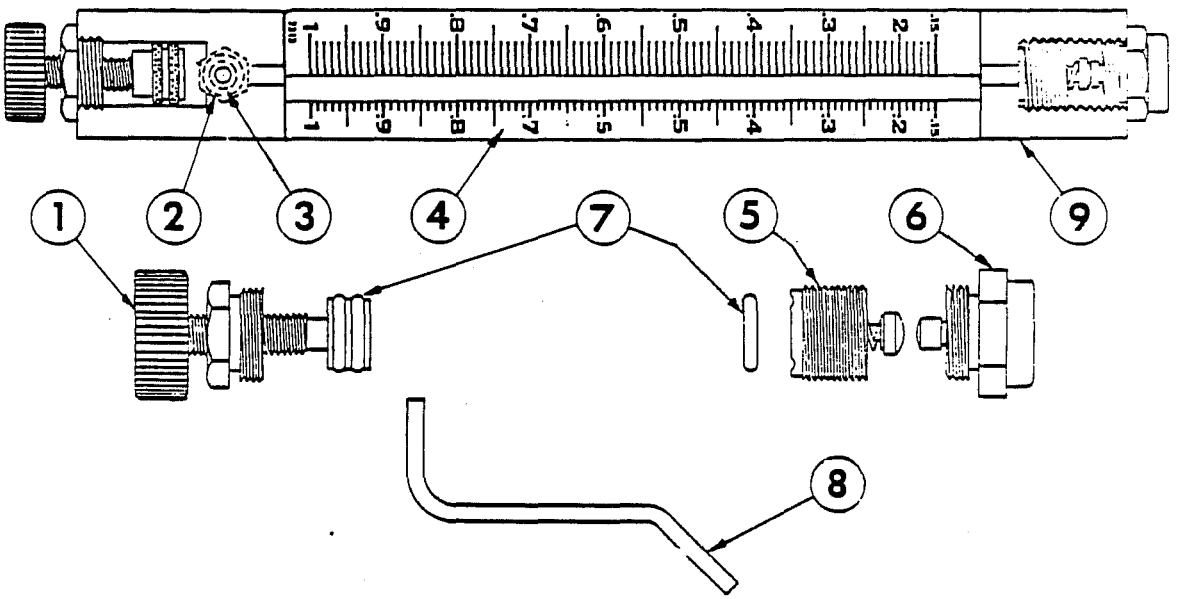

ITEM NO.	NO. REQ'D.	DESCRIPTION
9	1	MANOMETER BLOCK
8	1	CONNECTING TUBE
7	3	"O" RING
6	1	PUSHBUTTON
5	1	VALVE
4	1	SCALE
3	1	"O" RING
2	1	COUPLING FITTING
1	1	UNITY ADJUSTER ASSEMBLY

This page intentionally left blank.

RATIO GAUGE ASSEMBLY
FOR TYPE 7300D
FIGURE E2

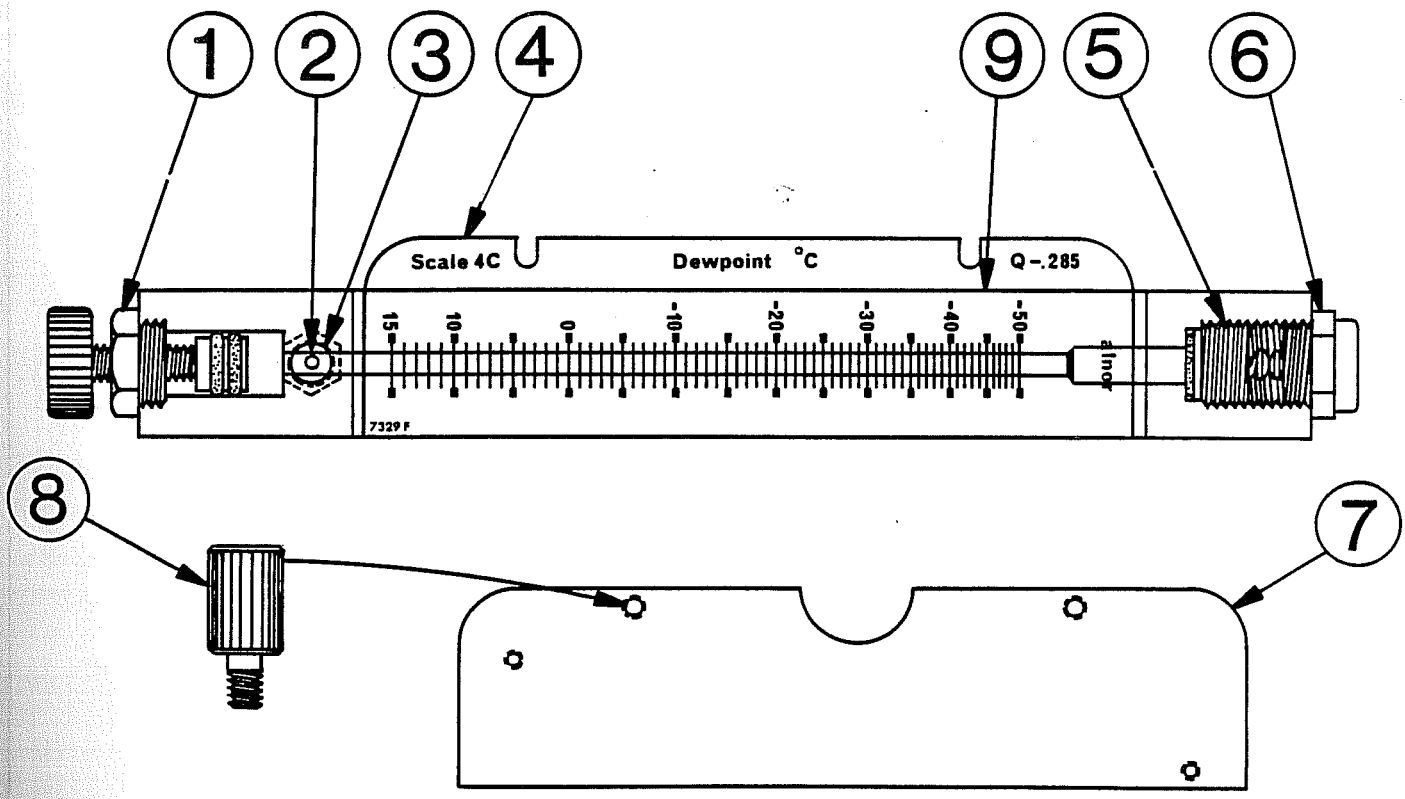

ITEM NO.	NO. REQ'D.	DESCRIPTION
9	1	MANOMETER BLOCK
8	2	SCREW
7	1	SCALE BLOCK
6	1	PUSHBUTTON
5	1	VALVE
4	1	SCALE (SET OF 4)
3	1	"O" RING
2	1	COUPLING FITTING
1	1	UNITY ADJUSTER ASSEMBLY

PUMP ASSEMBLY
(FIGURE F)
556-034-006 FOR MODEL 7000 SERIES
557-019-007 FOR MODEL 7300 SERIES

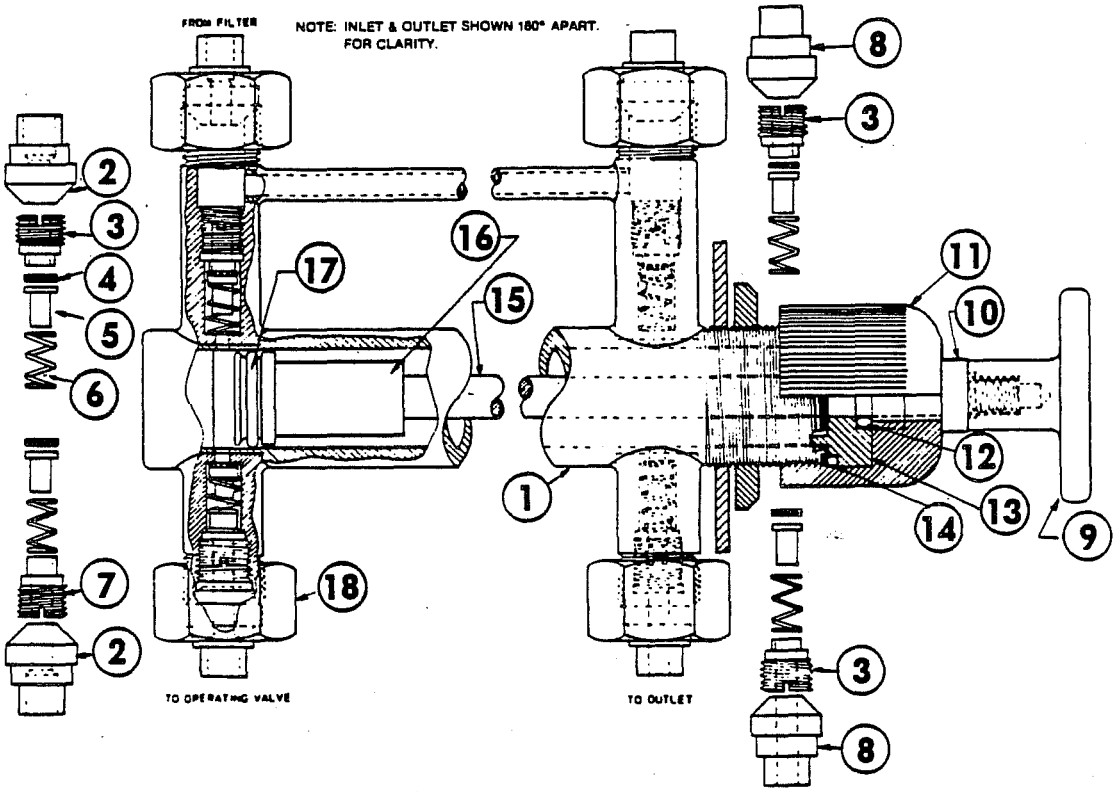

ITEM NO.	NO. REQ'D.	DESCRIPTION
18	4	NUT
17	1	O-RING, 5/8 DIA
16	1	PISTON BUMPER
15	1	PISTON ROD ASSEMBLY
14	1	O-RING, 13/16 DIA
13	1	CAP SPACER
12	1	O-RING, 3/8 DIA
11	1	CAP
10	1	BUMPER
9	1	PUMP KNOB
8	2	FITTING, SOLID
7	1	CHECK VALVE SCREW, LONG
6	4	VALVE SPRING
5	4	CHECK VALVE PLUNGER
4	4	O-RING
3	3	CHECK VALVE SCREW
2	2	FITTING, WITH HOLE
1	1	PUMP HOUSING

This page intentionally left blank.

RUPTURE FITTING ASSEMBLY
(558-002-007)
FIGURE G

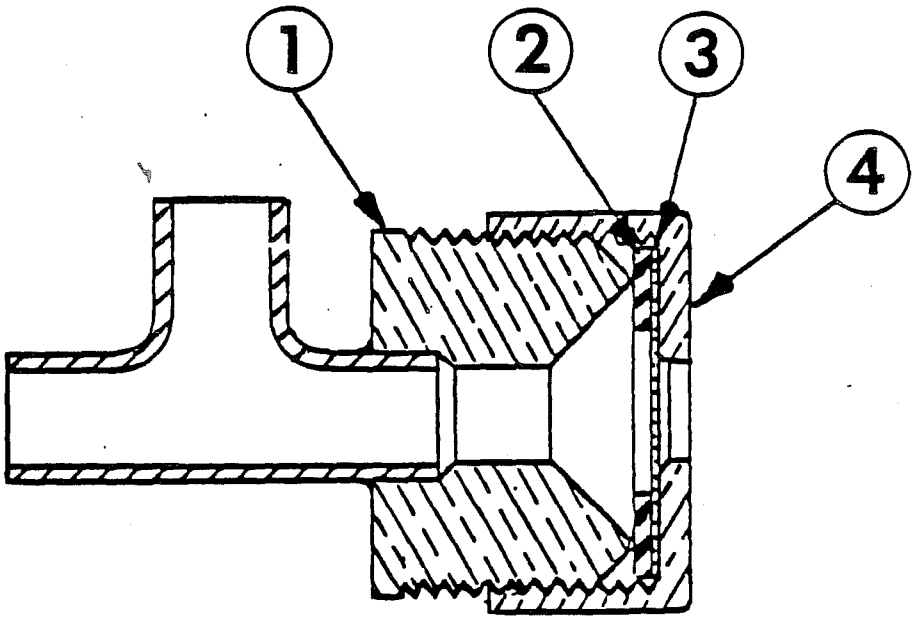

ITEM NO.	NO. REQ'D.	DESCRIPTION
4	1	RUPTURE CAP
3	1	RUPTURE DISK
2	1	RUPTURE GASKET
1	1	RUPTURE FITTING ASSEMBLY

INLET VALVE ASSEMBLY
(558-006-009)
FIGURE H

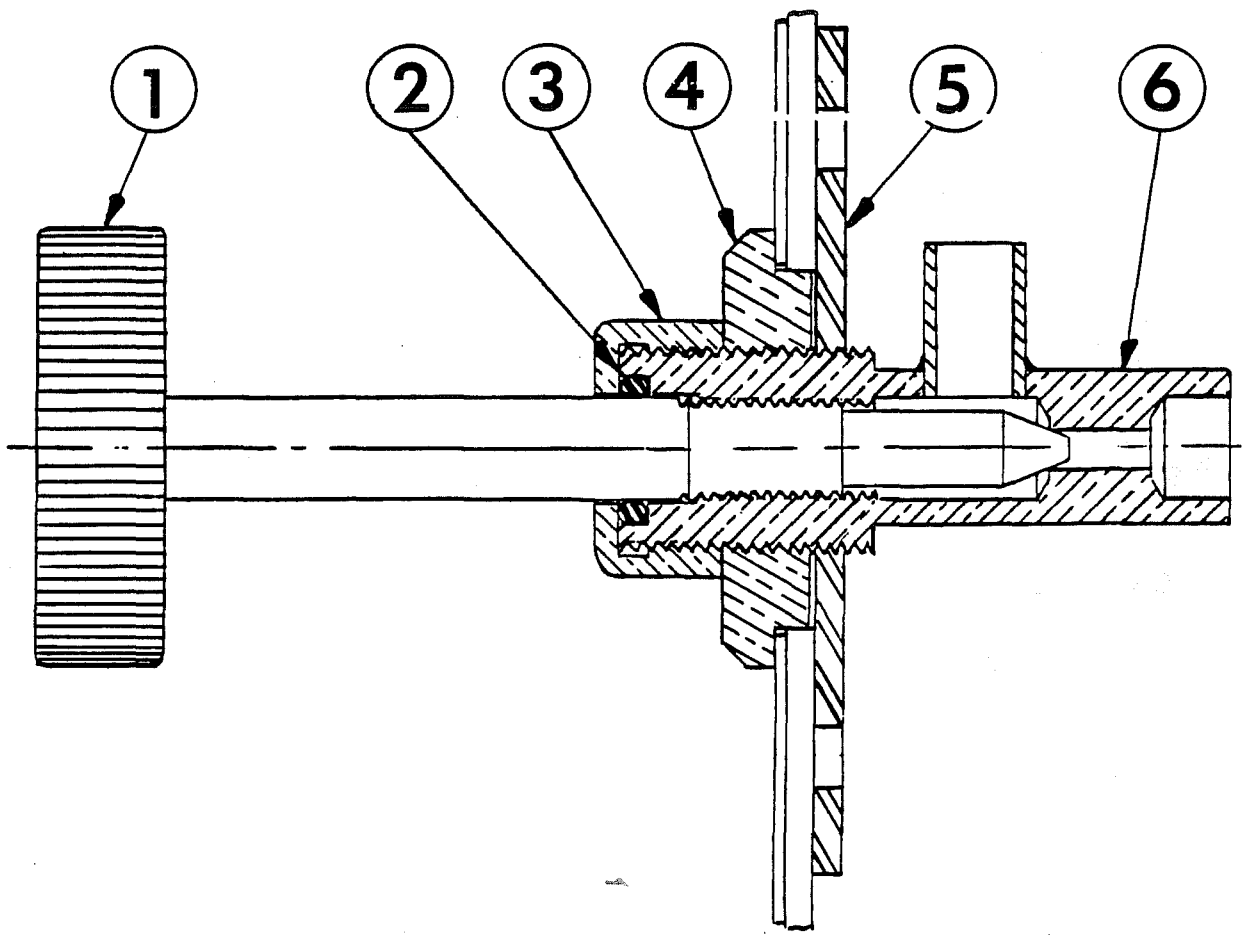

ITEM NO.	NO. REQ'D.	DESCRIPTION
6	1	INLET VALVE ASSEMBLY
5	1	INLET VALVE FLANGE
4	1	INLET VALVE RING
3	1	PURGING VALVE CAP
2	1	"O" RING
1	1	INLET SCREW ASSEMBLY

AUTOMATIC RELIEF VALVE ASSEMBLY
(558-007-004)
FIGURE 1

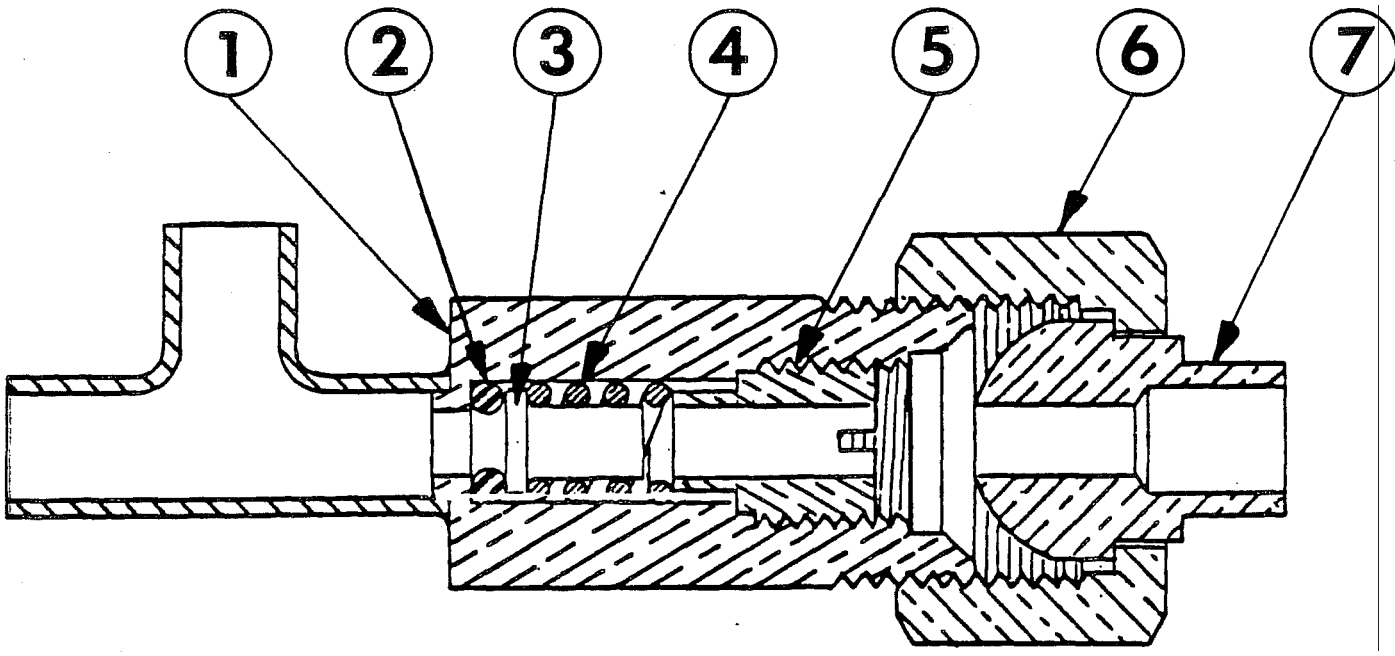

ITEM NO.	NO. REQ'D	DESCRIPTION
7	1	FITTING
6	1	FITTING NUT
5	1	VALVE SCREW
4	1	SPRING
3	1	VALVE PLUNGER
2	1	"O" RING
1	1	RELIEF VALVE ASSEMBLY

RESERVOIR ASSEMBLY
(556-025-007)
FIGURE J

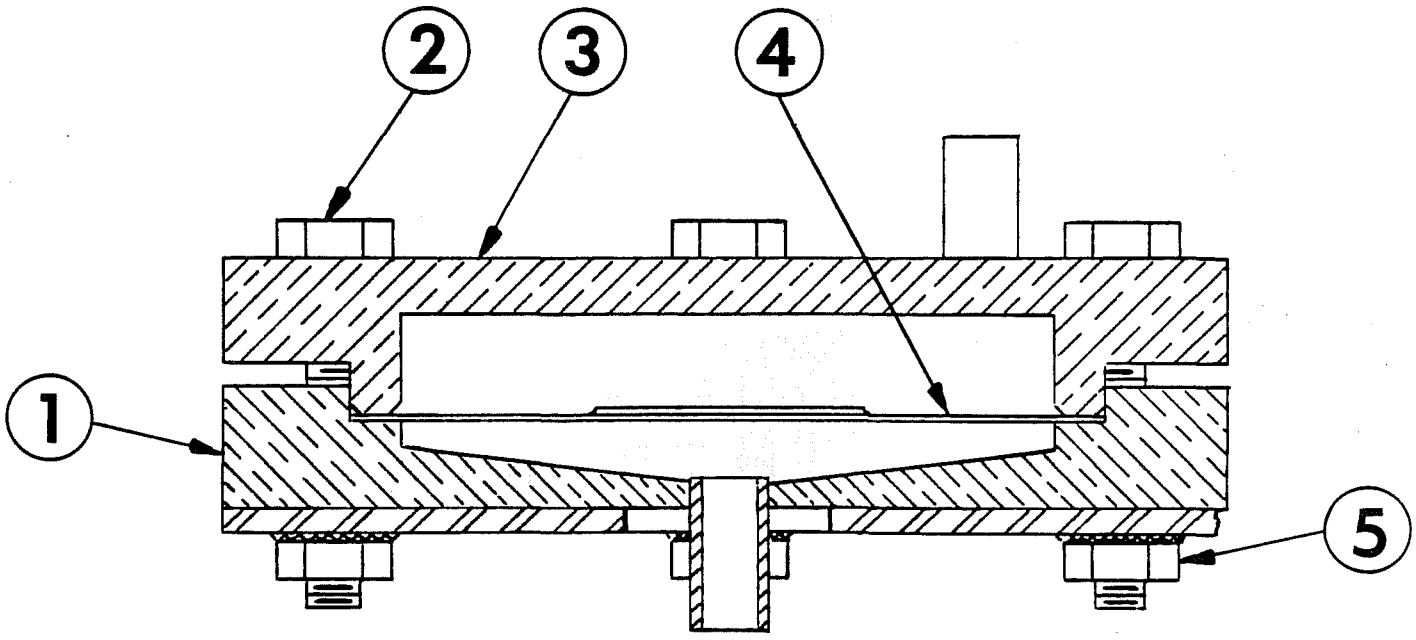

ITEM NO.	NO. REQ'D.	DESCRIPTION
5	6	#6-32 KEPS NUT
4	1	DIAPHRAGM
3	1	RESERVOIR COVER ASSEMBLY
2	6	#6-32X7/8 HEX. HD MACHINE SCREW
1	1	RESERVOIR ASSEMBLY

FILTER ASSEMBLY
(556-027-008)
FIGURE K

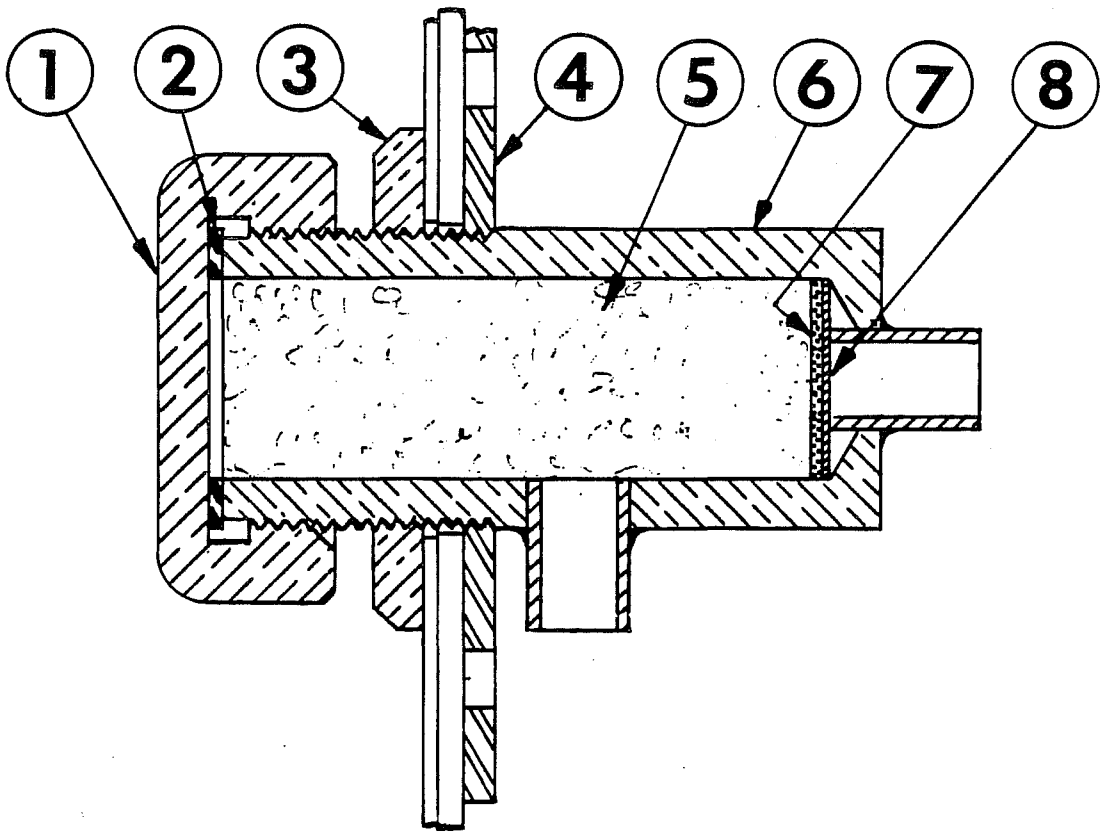

ITEM NO.	NO. REQ'D.	DESCRIPTION
8	1	SCREEN
7	1	GLASS FIBRE FILTER DISC
6	1	FILTER BARREL ASSEMBLY
5	A/R	FIBERGLASS
4	1	FLANGE
3	1	RING
2	1	GASKET
1	1	FILTER CAP

Fig. K1

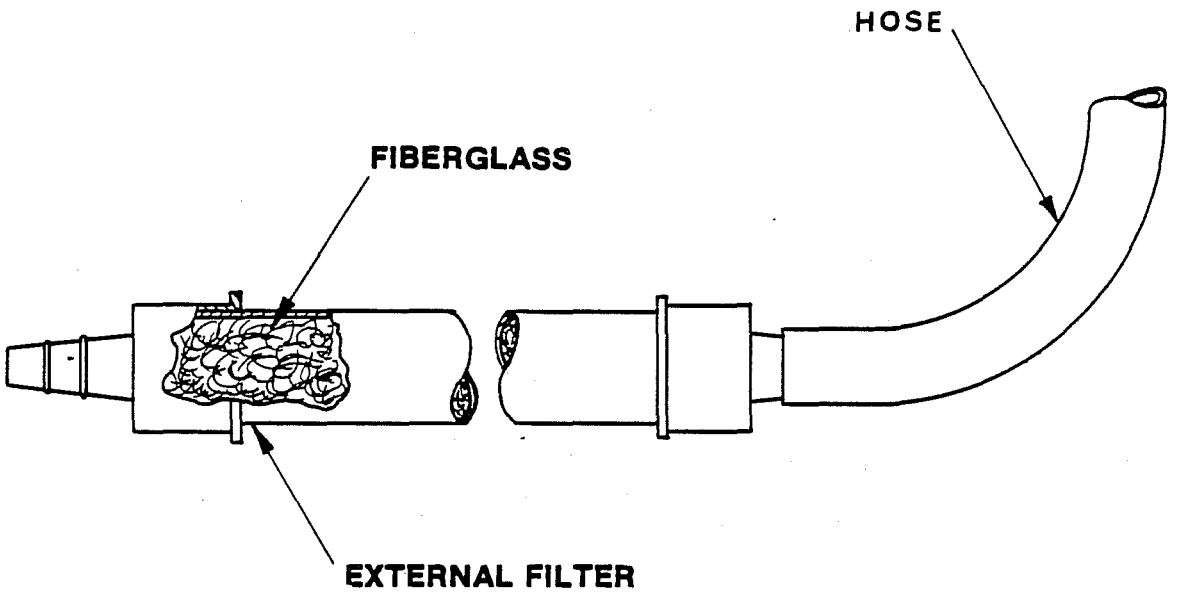

To provide further understanding of the piping and wiring of the Dewpointers, a series of schematic diagrams follows this page. In all of the instruments, the gas being tested enters at the inlet fitting, goes through the pump if there is one, and continues to the lower chamber of the reservoir. From there the gas flows into the fog chamber where it may be trapped and compressed or it may simply pass on through and be discharged from the outlet fitting. The choice is determined by the closing or the opening of the purging valve.

The reservoir contains an upper and a lower chamber, separated by a flexible Mylar diaphragm. The sample gas passes through the lower chamber; manometer fluid fills the upper chamber and up into the pressure ratio gauge. The pressures in the two chambers are usually almost equal so the diaphragm does not get stretched severely except when the operator presses the gauge valve while there is pressure in the fog chamber. This action forces the manometer fluid out the top of the gauge valve and the unbalance in pressure distends the diaphragm upward, often permanently distorting it.

In the power transformer the primary is made with two coils which can be connected in series or in parallel to allow the application of either 230 volts or 115 volts. A change in the field is not recommended because electrical codes require that different cord sets be used with the two voltages.

A study of Figure 13 shows no pump because the system is pressurized by the source of gas. For safety, both an automatic pressure relief valve and a rupture disk fitting are provided in the inlet piping.

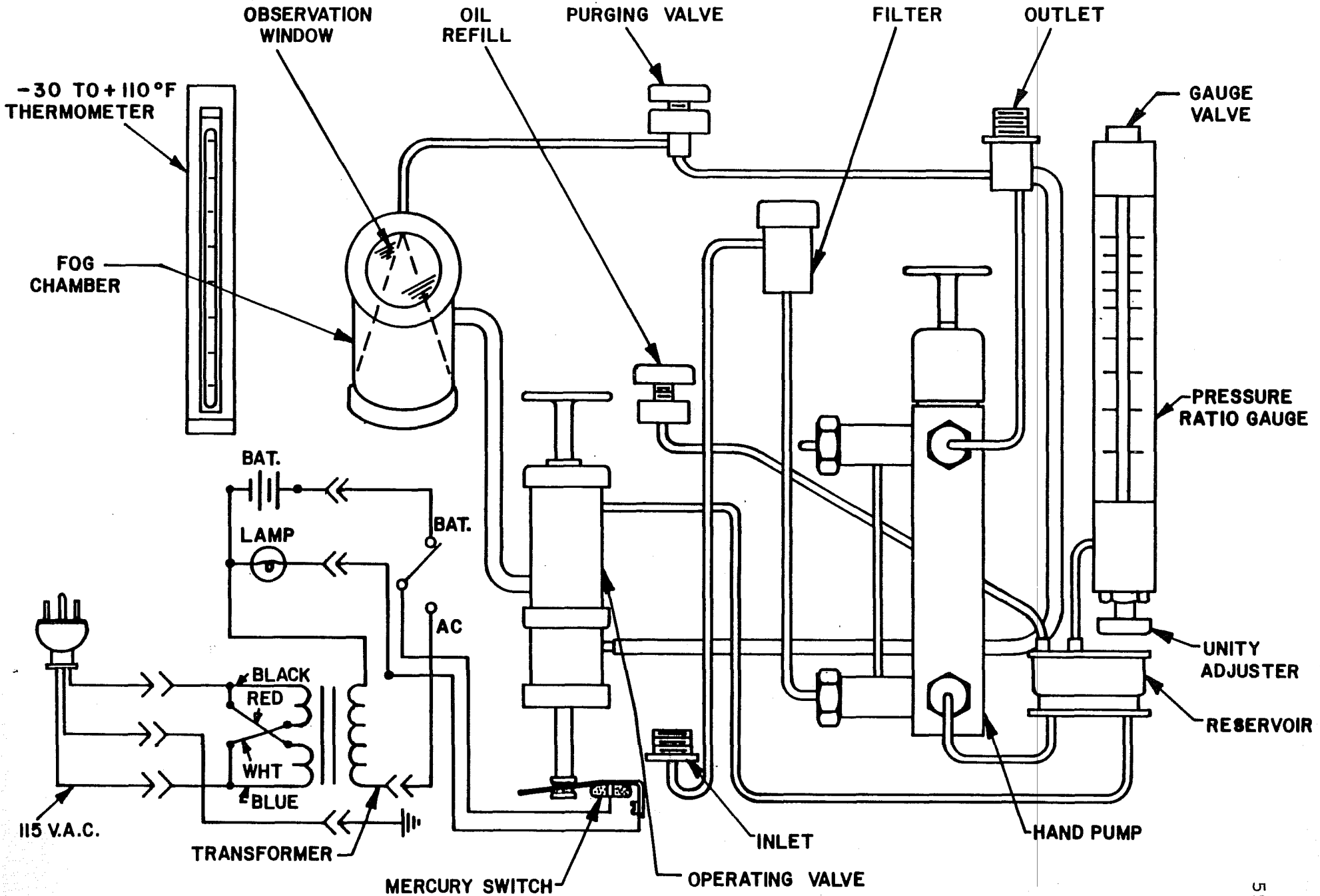

TYPE 7000

SCHEMATIC DIAGRAM

PUB-NP-064, Attachment E
Page 1421

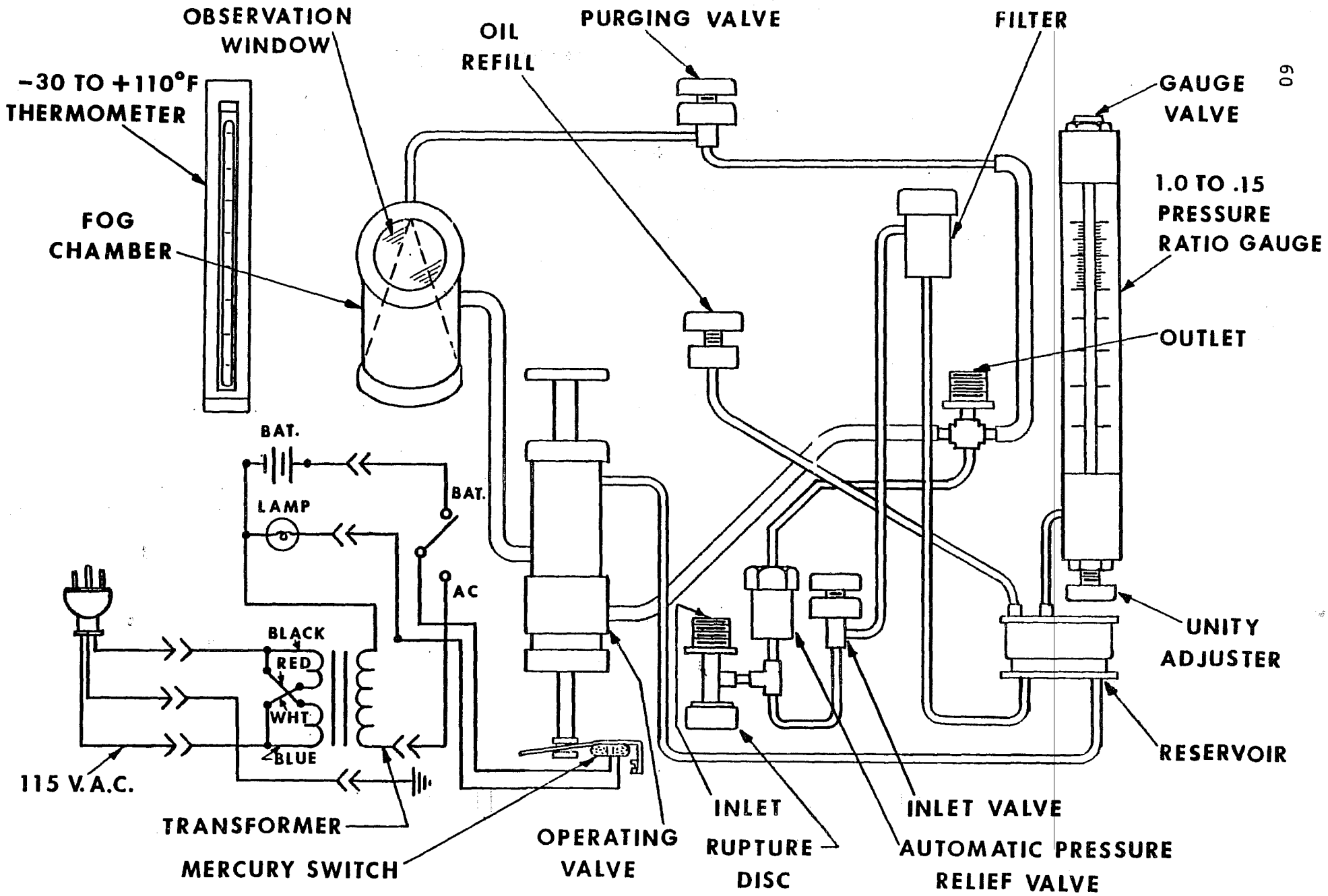

TYPE 7200

SCHEMATIC DIAGRAM

60

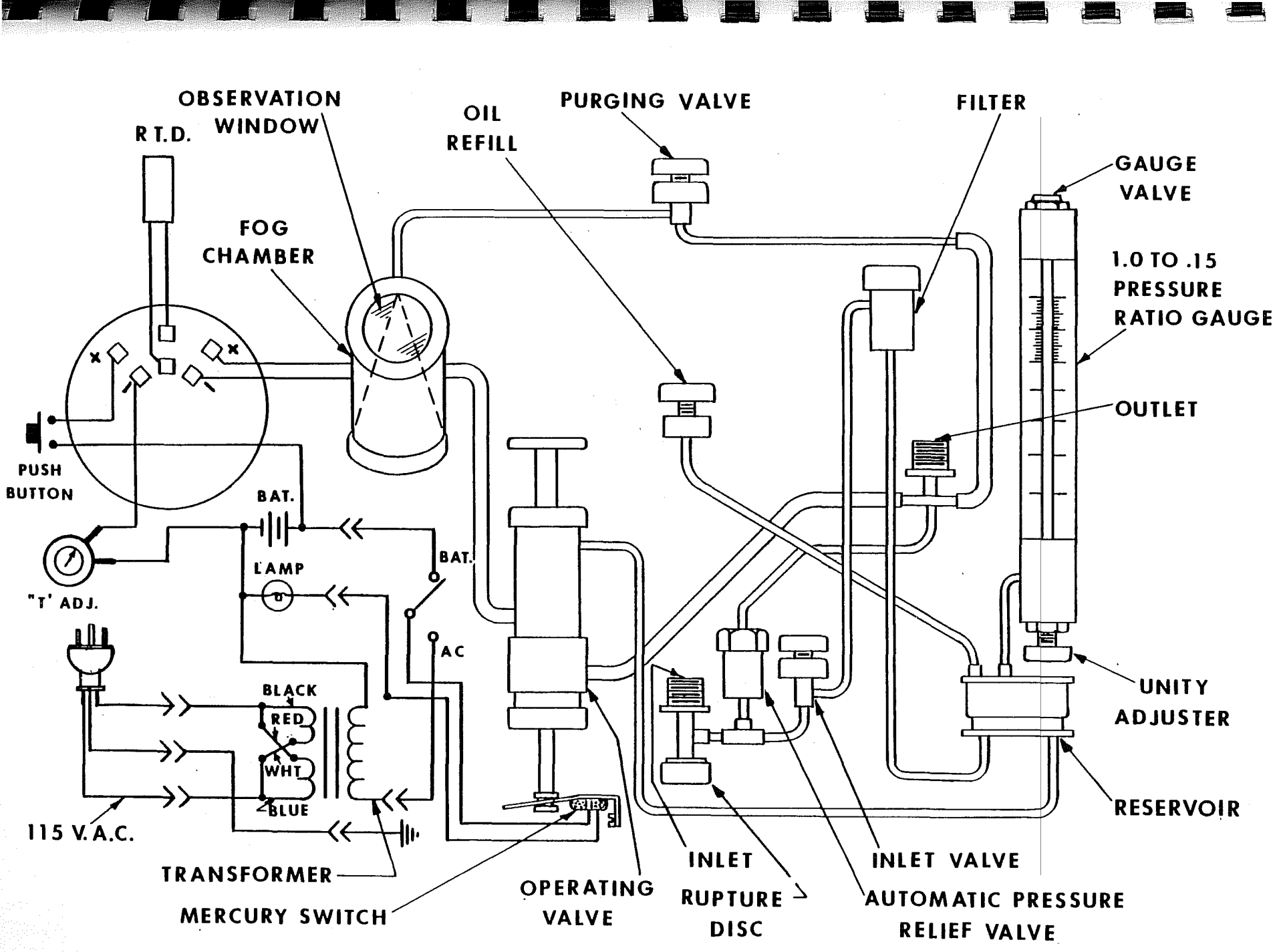

TYPE 7350

SCHEMATIC DIAGRAM

PUB-NP-064, Attachment E
Page 1423

TYPE 7000 and 7300

FIGURE	ITEM NO.	PART NO.	DESCRIPTION
		OIL REFILL ASSEMBLY 556-046-001	
A	1	300-003-000	Refill Valve Cap
A	2	300-002-004	Needle Screw
A	3	300-001-009	Refill Block
A	4	300-006-006	Refill Valve Nut
		PURGING VALVE ASSEMBLY 556-005-008	
B	1	556-004-002	Purging Screw Assembly
B	2	590-003-008	O-ring (Pkg. of 6)
B	3	300-008-007	Valve Cap
		OPERATING VALVE 556-011-000	
C	5	590-003-062	O-ring (Pkg. of 6)*
C	9	590-003-047	Hydraulic V-ring (Pkg. of 8)
C	10	590-003-022	V-ring, Male (Pkg. of 8)
C	11	590-003-030	V-ring, Female (Pkg. of 8)
C	12	590-003-015	Valve Spacer (Pkg. of 2)
		RATIO GAUGE ASSEMBLY 556-014-007 FOR TYPE 7000 557-010-008 FOR TYPE 7300	
E	1	556-016-008	Unity Adjuster (with O-rings)
E	2	355-001-001	Manometer Coupling
E	3	590-003-093	O-ring (Pkg. of 12)
E	5	556-018-009	Manometer Valve Assembly
E	6	556-019-004	Pushbutton Assembly
E	7	590-003-086	O-ring (Pkg. of 12)
E	8	315-016-006	Connecting Tube

* This O-ring replaces spring and valve washers found on older assemblies.

TYPE 7000 and 7300

FIGURE	ITEM NO.	PART NO.	DESCRIPTION
RESERVOIR ASSEMBLY 556-025-007			
J	4	590-003-104	Diaphragm (Pkg. of 6)
FILTER ASSEMBLY 556-025-007			
K	1	300-037-002	Filter Cap
K	2	339-007-001	Filter Gasket
K, K1	5	556-045-006	Fiberglass
K	7	590-003-111	Filter Disk
K	8	306-001-005	Filter Screen
K1	-	321-001-005	External Filter
PUMP ASSEMBLY 556-034-006 (Model 7000 Series) 557-019-007 (Model 7300 Series)			
F	12	590-003-008	O-ring, 3/8 dia. (Pkg. of 6)
F	14	342-009-000	O-ring, 5/8 dia.
F	16	590-003-129	Piston Bumper (Pkg. of 2)
-	-	556-030-004	Spare Parts Kit, containing:
F	3		3 Check Valve Screws
F	4		12 O-rings
F	5		12 Check Valve Plungers
F	6		12 Check Valve Springs
F	7		1 Check Valve Screw, long
F	17		6 Piston O-rings

TYPE 7000 and 7300

MISCELLANEOUS PARTS

PART NO.	DESCRIPTION
349-001-000	Thermometer, 40 to 120°F
349-002-006	Thermometer, 0 to 50°C
590-003-225	Lamp, 6-8 volt (Pkg. of 2)
459-005-005	Battery
308-013-013	Battery Bracket
037-240-000	Tubing (per foot, state qty.)
556-043-005	Wrench
116-001-005	Calculator
556-044-018	Manometer Oil
556-045-006	Filter Fiberglass (1 box)

TYPE 7200 and 7350

FIGURE	ITEM NO.	PART NO.	DESCRIPTION
OIL REFILL ASSEMBLY 556-046-001			
A	1	300-003-000	Refill Valve Cap
A	2	300-002-004	Needle Screw
A	3	300-001-009	Refill Block
A	4	300-006-006	Refill Valve Nut
PURGING VALVE ASSEMBLY 556-005-008			
B	1	556-004-002	Purging Screw Assembly
B	2	590-003-008	O-ring (Pkg. of 6)
B	3	300-008-007	Valve Cap
OPERATING VALVE 556-011-000			
C	5	590-003-054	Spring Washer (Pkg. of 4)
C	6	590-003-061	Valve Washer (Pkg. of 4)
C	9	590-003-047	Hydraulic V-ring (Pkg. of 8)
C	10	590-003-022	V-ring, Male (Pkg. of 8)
C	11	590-003-030	V-ring, Female (Pkg. of 8)
C	12	590-003-015	Valve Spacer (Pkg. of 2)

TYPE 7200 and 7350

FIGURE	ITEM NO.	PART NO.	DESCRIPTION
RATIO GAUGE ASSEMBLY		556-014-007 FOR TYPE 7200 557-010-008 FOR TYPE 7350	
E	1	556-016-008	Unity Adjuster (with O-rings)
E	2	355-001-001	Manometer Coupling
E	3	590-003-093	O-ring (Pkg. of 12)
E	5	556-018-009	Manometer Valve Assembly
E	6	556-019-004	Pushbutton Assembly
E	7	590-003-086	O-ring (Pkg. of 12)
E	8	315-016-006	Connecting Tube
SET OF 4 SCALES FOR DIRECT READING MODELS:			
E2	4	557-018-001	Scale Set for Fahrenheit
E2	4	557-029-001	Scale Set for Celsius
RUPTURE FITTING ASSEMBLY 558-002-007			
G	2, 3	590-003-175	Gasket and Disc (Pkg. of 12 each)
G	4	300-053-002	Rupture Cap
INLET VALVE ASSEMBLY 558-006-009			
H	1	558-005-003	Inlet Screw Assembly
H	2	590-003-008	O-ring (Pkg. of 6)
H	3	300-008-007	Valve Cap
AUTOMATIC RELIEF VALVE ASSEMBLY 558-007-004			
I	2	342-004-008	O-ring*
I	3	300-037-005	Valve Plunger*
I	4	329-001-007	Spring
I	5	300-036-017	Valve Screw*

* These parts are also available as part of Pump Assembly Spare Parts Kit 556-030-004.

TYPE 7280 (OXYGEN ONLY)

PART NO.	DESCRIPTION
590-003-200	O-ring, 7/16 dia. (Pkg. of 12)
556-018-016	Manometer Valve Assembly
556-044-032	Manometer Fluid (4 oz container)
103-004-001	Silicon Lubricant, for Operating Valve (5 oz tube)
590-003-218	O-ring, 1/4 dia. (Pkg. of 12)

XIV. TECHNICAL APPENIX

This appendix is offered to provide further understanding of the physics behind Alnor's method of measuring dew point temperatures. Since mixtures of gases are frequently used in industry, it is important to know how to calculate the Q value of mixtures.

Q Value of Mixtures

A mixture of gases can be treated as a single gas if the proper constants are established. The value of Q can be computed by one of the following methods.

Method 1 Mass Basis

Since the effect that the specific heat of an individual gas has on the specific heat of the mixture is proportional to the mass of the gas present the following equation can be written.

$$(1)\quad C_{pm} = \frac{M_x}{M_m} C_{px} + \frac{M_y}{M_m} C_{py} + \text{---} + \frac{M_z}{M_m} C_{pz}$$

$$(2)\quad C_{vm} = \frac{M_x}{M_m} C_{vx} + \frac{M_y}{M_m} C_{vy} + \text{---} + \frac{M_z}{M_m} C_{vz}$$

Where

C_{pm} = Specific heat at constant pressure of the mixture,

C_{vm} = Specific heat at constant volume of the mixture

C_{px}, C_{py} & C_{pz} = Specific heat at constant pressure of each gas

C_{vx}, C_{vy} & C_{vz} = Specific heat at constant volume of each gas

M_m = Total weight of the mixture

M_x, M_y & M_z = Weight of each gas

Specific heats are expressed in heat units per weight unit per temperature unit such as B.T.U. per pound per °F.

Then

(3) $K_m = \frac{C_{pm}}{C_{vm}}$

and

(4) $Q_m = \frac{K_m - 1}{K_m}$ or from Figure 3 where

K_m = K value for the mixture

Q_m = Q value for the mixture

It is only necessary to insert the proper values in equations (1) and (2) and then solve.

Example for Method 1

A mixture of gas is known to be composed of the following:

20% by weight CH_4

40% by weight CO_2

40% by weight N_2

Find the value of Q_m

Substituting in equations 1 and 2

$C_{pm} = .2(.593) + .4\ (.200) + .4\ (.247) = .2974$

$C_{vm} = .2(.450) + .4\ (.155) + .4\ (.176) = .2224$

Then

$K_m = \frac{.2974}{.2224} = 1.337$

and

$Q_m = \frac{.337}{1.337} = .252$

Method 2 Volumetric Basis

When a mixture of gases is analyzed with an Orsat apparatus the percentages of each component are determined on a volumetric basis. It is, therefore, essential that these volumetric percentages be converted to weight percentages before Method 1 can be used.

$$(5)\ \frac{M_x}{M_m} = \frac{Xd_x}{d_m} \ ; \ \frac{M_y}{M_m} = \frac{Yd_y}{d_m} \ ; \text{etc.}$$

Where

X = percent by volume of gas X
d_x = density of gas X

d_m = density of the mixture

Notice that any condition of temperature and pressure and any units of density can be used provided the same conditions and units are used throughout.

Equations 1, 2, 3 & 5 can be combined and multiplied by $\frac{d_m}{d_m}$ to give this simple form.

$$(6)\ K_m = \frac{Xd_xC_{px} + Yd_yC_{py} + \text{---} + Zd_zC_{pz}}{Xd_xC_{vx} + Yd_yC_{vy} + \text{---} + Zd_zC_{vz}}$$

Where X, Y and Z are volumetric percentages of each gas and d_x, d_y and d_z are the densities of each gas.

Since the values of d_xC_{px} are presented in Table V the solution of Equation 6 is extremely simple. Q can be obtained from Figure 3. Because of similarity of values, CO, CO_2, H_2 and N_2 can be considered one gas.

TABLE V

Gas	Density lbs/c.f. @62°F	C_p B.T.U. per lb.	C_v B.T.U. per lb.	(d)C_p B.T.U. per c.f.	(d)C_v B.T.U. per c.f.	K	Q
CO	.0735	.245	.175	.0180	.0128	1.40	.2855
N_2	.0737	.247	.176	.0182	.0130	1.40	.2855
O_2	.0840	.217	.155	.0182	.0130	1.40	.2855
Air	.0757	.241	.171	.0182	.0130	1.40	.2855
H_2	.00529	3.42	2.44	.0181	.0129	1.40	.2855
CO_2	.1156	.200	.155	.0231	.0179	1.29	.225
CH_4	.0421	.593	.450	.0250	.0190	1.315	.240
He	.01114	1.25	.753	.0139	.0084	1.660	.400
A	.11135	.125	.0751	.0139	.0084	1.668	.400

Notice that all diatomic gases listed can be treated as a single gas for all practical purposes.

Example for Method 2

A mixture of gases is known to consist of the following:

72% by volume N_2

12.5% by volume of H_2

10% by volume of CO

5% by volume of CO_2

.5% by volume of CH_4

Find the value of Q

Substituting in equation 6

Gas	Numerator		Denominator	
N_2	.72	(.0182)=.01310	.72	(.0130)=.00936
CO	.10	(.0180)=.00180	.10	(.0128)=.00128
CO_2	.05	(.0231)=.00116	.05	(.0179)=.00090
H_2	.125	(.0181)=.00226	.125	(.0129)=.00161
CH_4	.005	(.0250)=.00013	.005	(.0190)=.00010
		.01845		.01325

$$K_m = \frac{.01845}{.01325} = 1.392 \qquad Q_m = .282$$

Method 3 Curves

A great many commonly used mixtures consist of only one gas other than diatomic gases. For these mixtures values of Q can be taken from the curves in Figure 4. The curves are plotted for mixtures which consist of percentages of the gas named where the balance of the mixture is N_2, O_2, H_2 or CO. If small percentages of other gases are present, they can be ignored.

EXAMPLE FOR METHOD 3

Given the mixture specified for the example of Method 2 find the value of Q by use of Figure 4.

Since the values of $d(C_p)$ and $d(C_y)$ are so nearly equal for all the diatomic gases, assume that they are actually one gas having the characteristics of N_2. Since the volume of CH_4 is small, add it to the CO_2. Then the analysis of the gas becomes:

5.5% by volume CO_2

94.5% by volume N_2

From Figure 4, Q = .281

Accuracy of Gas Analysis

An error of .005 in the Q value will result in an error of approximately two Fahrenheit degrees when the pressure ratio is .4; the error will be less for higher pressure ratios. An error of about 10% in the volumetric analysis of CH_4 or about 7% in the volumetric analysis of CO_2 is generally permissable. It is, therefore, evident that the Alnor Dewpointer is not dependent upon an accurate gas analysis as far as common mixtures are concerned, and it is not necessary to make an Orsat analysis prior to each dew point test.

Figure 5 graphically shows the effect of Q value in the dew point determination assuming an initial temperature of 80°F. For comparatively high dew points (above 0°F) this value is far less critical. For lower dew points the value of Q should be known with greater accuracy.

Vapor Density and Vapor Pressure

For each dew point there is a corresponding water vapor pressure and water vapor density. The Alnor Dewpointer might just as well have been named a "Vapor Pressure Tester" or "Vapor Density Gauge". The following curves have been provided to permit easy transfer from one set of values to another as the need arises. See Figure 6.

For dew points below freezing there are theoretically two possible values for vapor pressure, that is, vapor pressure over ice or vapor pressure over water. There is considerable experimental evidence indicating that the vapor pressure of air corresponds with the vapor pressure of sub-cooled water, whether the air is actually in contact with sub-cooled water or with ice. Accordingly, the vapor pressures plotted on the following curves correspond with the vapor pressures over sub-cooled water. Vapor densities are plotted on the same basis.

The Dewpointer as a "Go, No-Go Gauge"

For shop use it is frequently desirable to use the Dewpointer as a GO, NO-GO Gauge. In the example given below the operation becomes so simple that comparatively untrained personnel can use the instrument.

As an example assume a situation where a gas having a Q value of .2855 is carried in a pipeline at 1 pound gauge pressure. The process is to be operated so that the dew point is kept below 0°F. By performing the operations in reverse order the Dewpoint Calculator can be used to develop a chart as follows:

1. Set arrow 1 at initial temperature on Scale E.

2. On Scale D read the limiting pressure ratio opposite the critical dew point temperature.

FOR 0°F DEW POINT

Q = .2855

THERMOMETER	PRESSURE RATIO GAUGE
70	.61
72	.60
74	.59
76	.583
78	.577
80	.57

The instrument can be left connected to the gas line continuously with the purge valve cracked so that a small amount of gas is bleeding through continuously. Thus no additional purging would be required. All the operator would have to do is read the thermometer - close the purging valve - pump the instrument up to the indicated pressure ratio - pause for fifteen seconds - and press the operating valve. If a fog appears the dew point is above 0°F.

Dew Points at Elevated Pressures

If a sample of gas is compressed, the vapor pressure is increased. The compressed gas, therefore, has a higher dew point that corresponds to the new vapor pressure.

The Alnor Dewpointer gives the dew point at atmospheric pressure. When the corresponding dew point at higher pressures is required, refer to Figure 8.

Example: A gas is carried in a pipeline at 585 pound gauge pressure. The Alnor Dewpointer indicates the dew point is -65°F. What is the actual dew point in the pipeline? The answer is 1°F.

Psychrometric Chart

Figure 9 shows the relationship between dew point temperature, dry bulb temperatures, and relative humidity in the low humidity regions which are difficult to read on the usual psychrometric chart. The Alnor Dewpointer is particularly useful for making humidity measurements in this comparatively dry region.

Relative humidity is by definition the ratio of the actual vapor pressure of water vapor (the saturated vapor pressure at the dew point) in an air-vapor mixture to its saturated vapor pressure at the dry bulb temperature.

Relative humidity may also be defined as ratio of the weight of water vapor in one cubic foot of the mixture to the weight of water vapor in one cubic foot of a saturated mixture at the same dry bulb temperature.

Example: Dry bulb temperature 80°F

Dew point temperature 0°F

What is the relative humidity

Answer from Figure 9, 4.4%

Figure 10 is a standard Psychrometric Chart. In addition to dew point temperatures, dry bulb temperatures, and relative humidity, it shows wet bulb temperatures, grains of water vapor per cubic foot, grains of water vapor per pound of dry air, and the volume of the mixture in cubic feet of mixture per pound of dry air.

Example: Dry bulb temperature 90°F

Dew point temperature 50°F

What other values can be read from the Psychrometric Chart?

Answer: Wet bulb temperature 65°F

Relative humidity 25%

Volume of the mixture
14.0 cubic feet per pound of dry air

Density of the vapor
4.11 grains per cubic foot

Weight of the vapor
53.4 grains per pound of dry air

The next few pages of this section show various graphs of a technical nature that are helpful to the person who wants to do more than simple routine measurements of dew point temperatures. The dew point calculator can be used to do more operations than just calculate the dew points when an initial temperature and a pressure ratio are observed for a gas having a known Q value. Notice the assumptions noted on the graph sheet. Making assumptions more appropriate to the problems encountered locally, the graphs needed in your work can be derived.

Most people hear about relative humidity more often than they hear about dew points. To convert from dew point to relative humidity, refer to Figure 10. The Dewpointer will measure extremely small amounts of water vapor in the air and these can be expressed in several ways by referring to the appropriate graphs in the next few pages.

Although the curves in Figure 9 do not resemble those in Figure 10, they are both psychrometric charts. Figure 9 covers the relative humidity range from 1% to 14% while Figure 10 covers the relative humidity range from about 10% up to 100%. Only three of the associated parameters are displayed in Figure 9 while about half a dozen are shown in Figure 10. These are very helpful charts for people in air conditioning or in process drying operations.

78

K TO Q CONVERSION CURVE

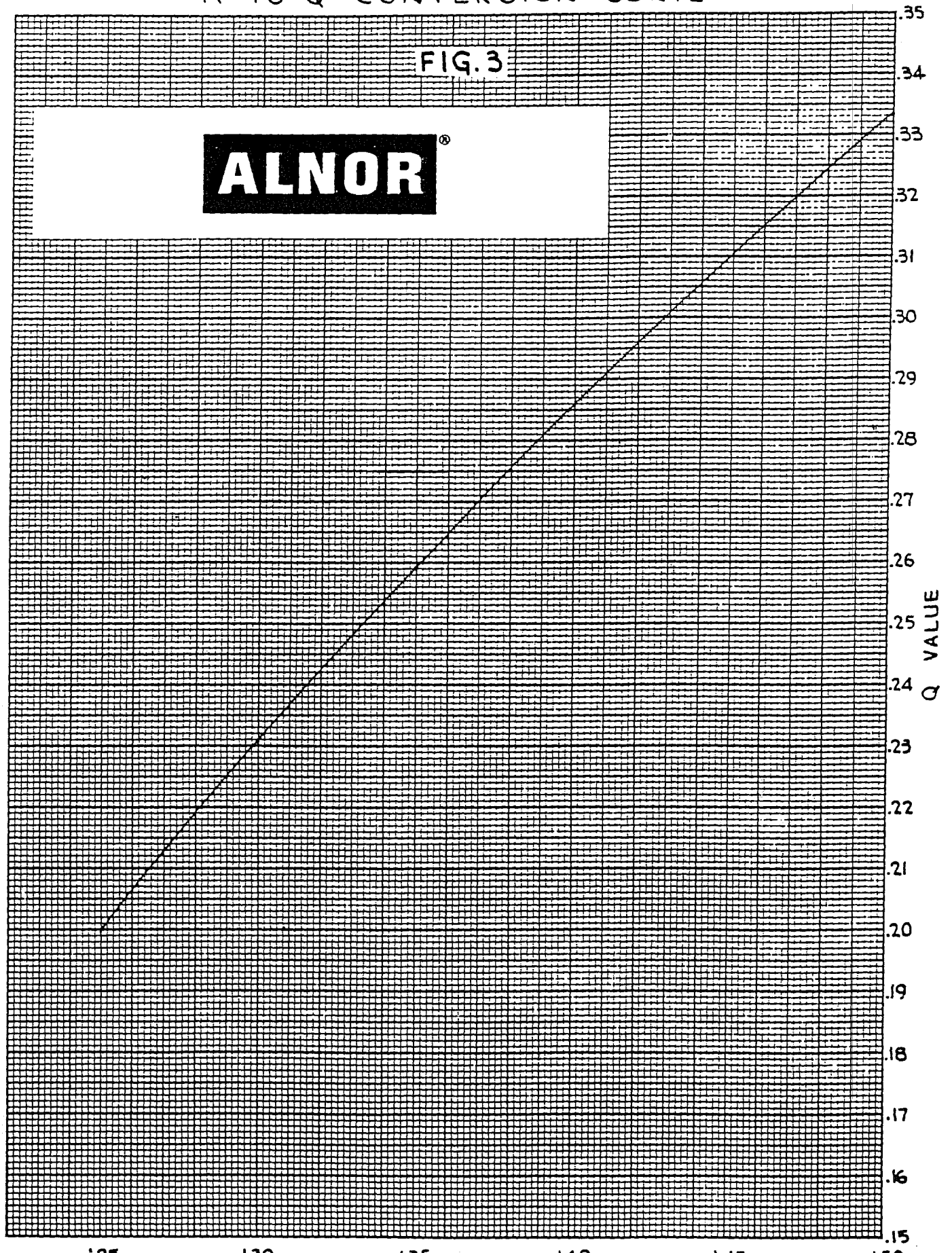

FIG. 4

Q VALUE OF GAS MIXTURES

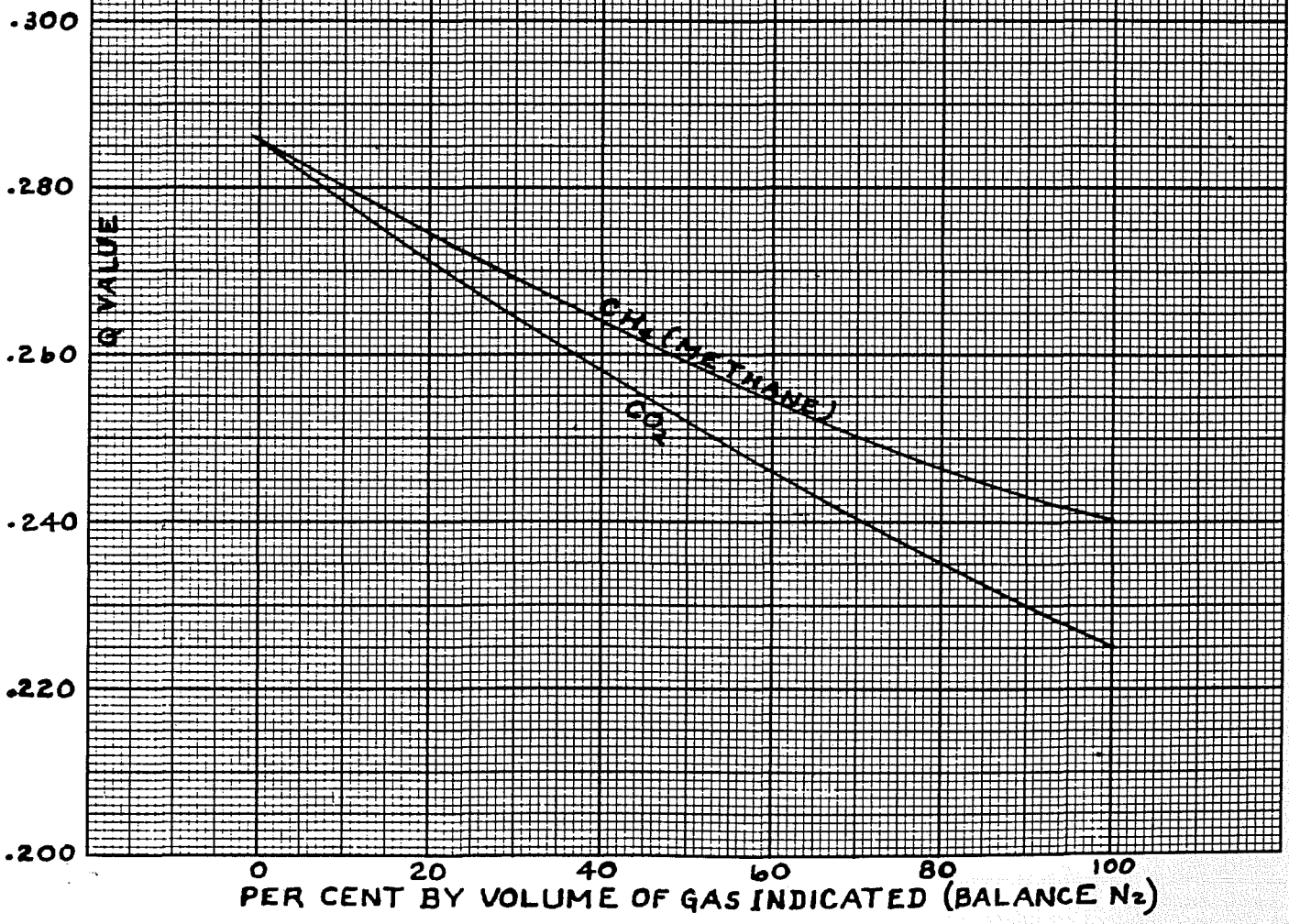

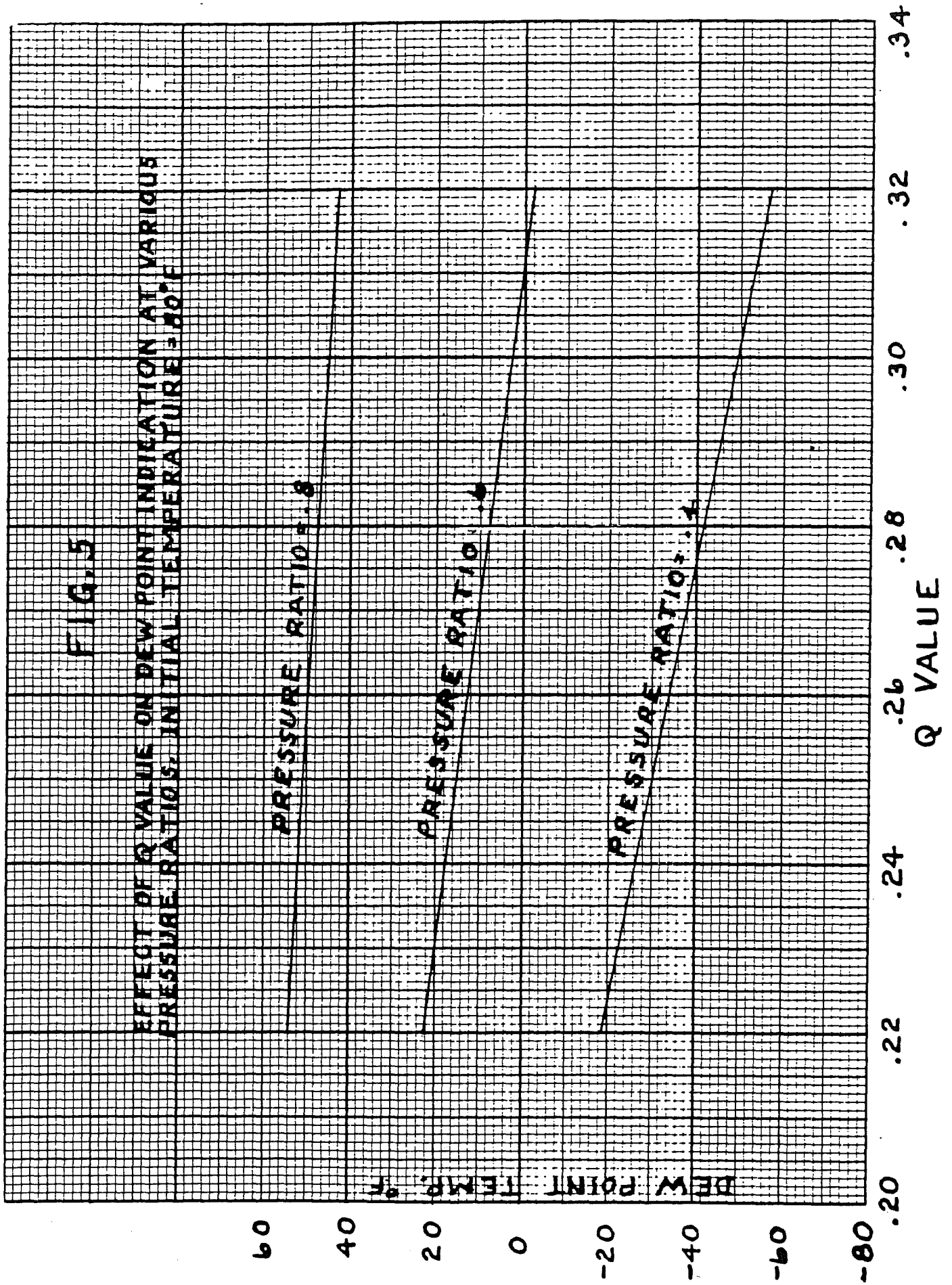
FIG. 5
EFFECT OF Q VALUE ON DEW POINT INDICATION AT VARIOUS PRESSURE RATIOS, INITIAL TEMPERATURE = 80°F
PRESSURE RATIO = .8
PRESSURE RATIO = .9
PRESSURE RATIO = 1
DEW POINT TEMP. °F
60
40
20
0
-20
-40
-60
-80
.20
.22
.24
.26
.28
.30
.32
.34
Q VALUE

VAPOR PRESSURE AND VAPOR DENSITY CURVES

FIG. 6

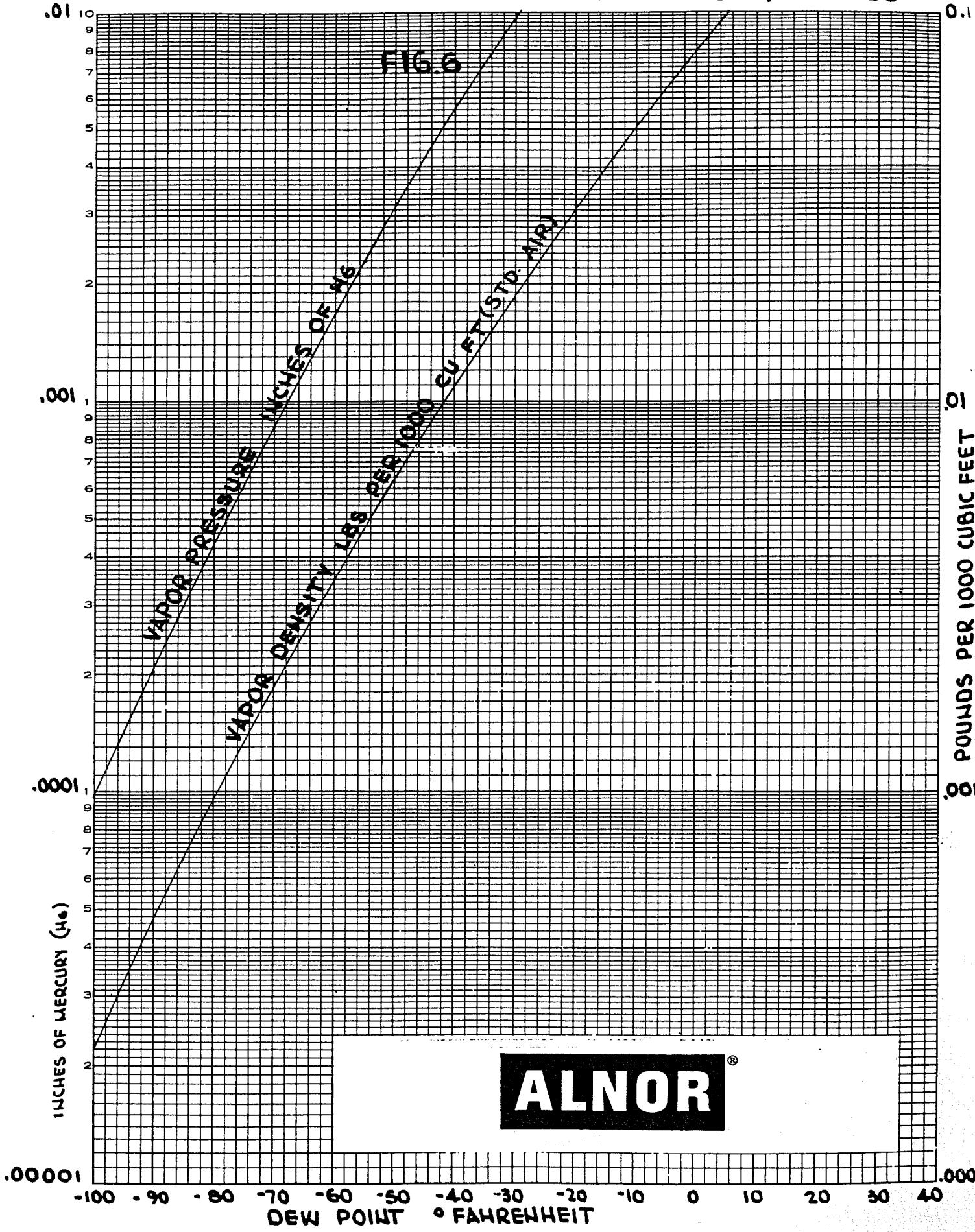

82

VAPOR PRESSURE AND VAPOR DENSITY CURVES

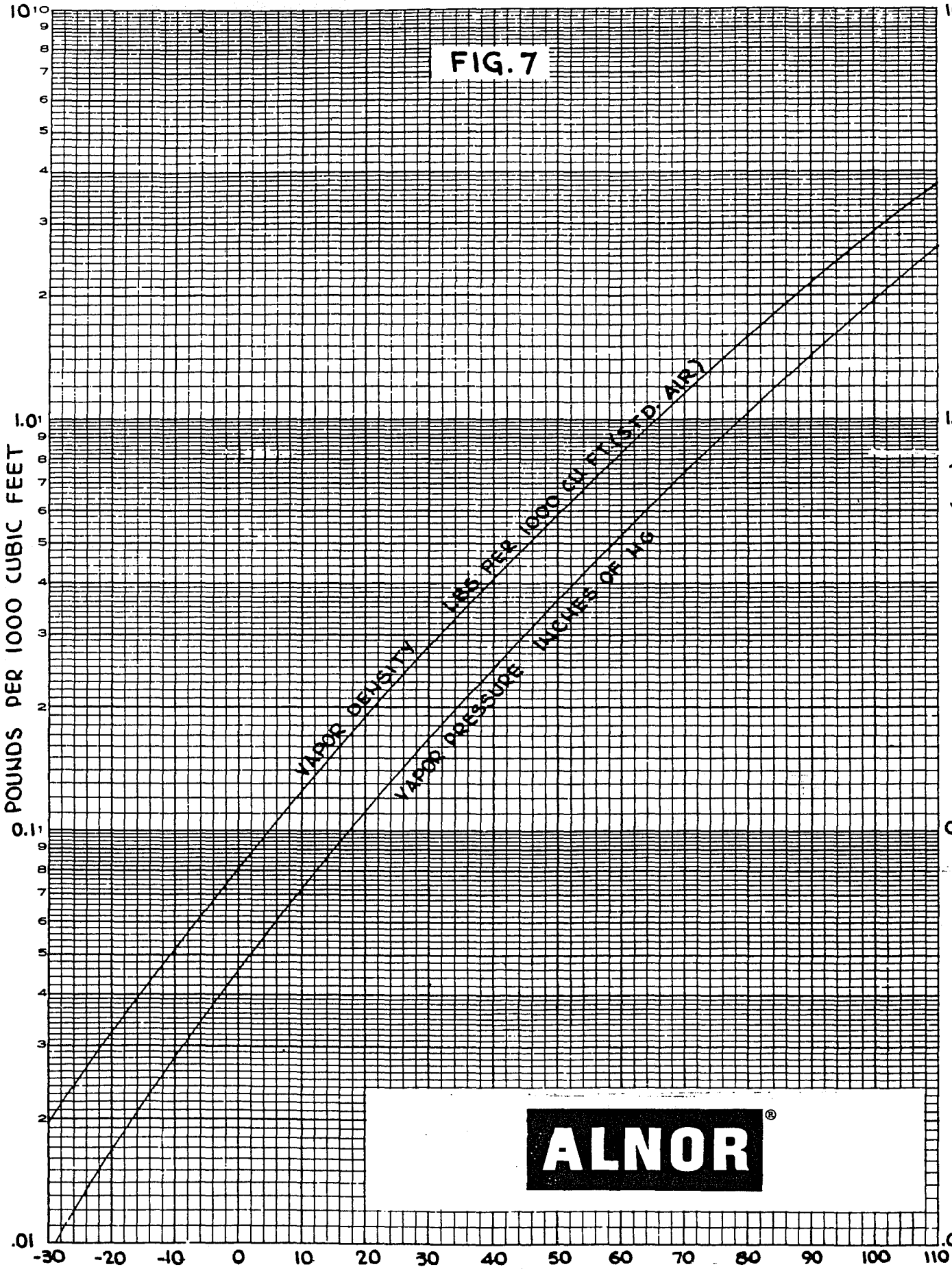

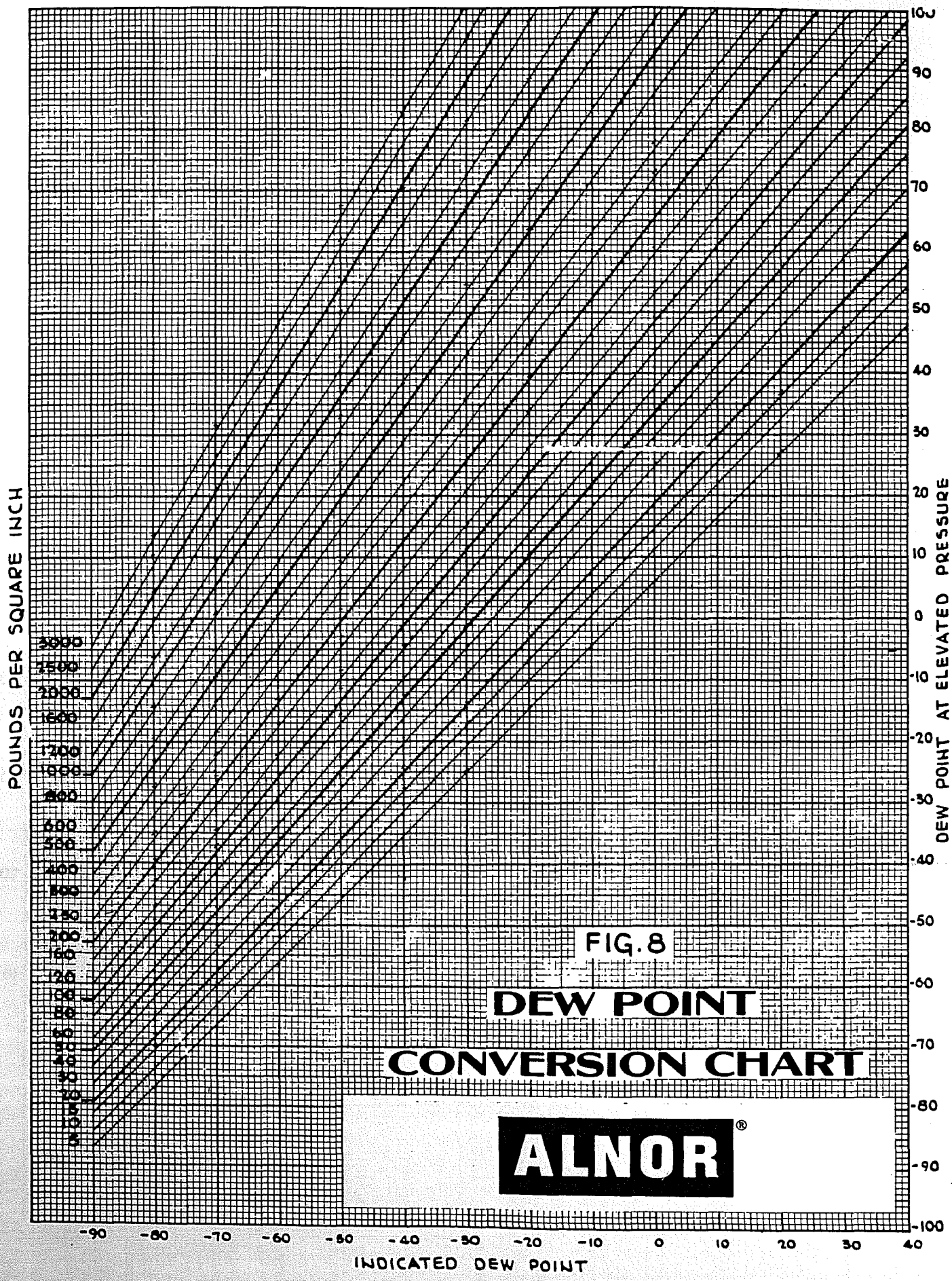
POUNDS PER SQUARE INCH
3000
2500
2000
1600
1200
1000
800
600
500
400
300
250
200
160
120
100
80
60
50
40
30
20
15
10
5
100
90
80
70
60
50
40
30
20
10
0
-10
-20
-30
-40
-50
-60
-70
-80
-90
-100
DEW POINT AT ELEVATED PRESSURE
-90
-80
-70
-60
-50
-40
-30
-20
-10
0
10
20
30
40
INDICATED DEW POINT
FIG. 8
DEW POINT
CONVERSION CHART
ALNOR®

84

PSYCHROMETRIC CHART

ALNOR®

FIG. 9

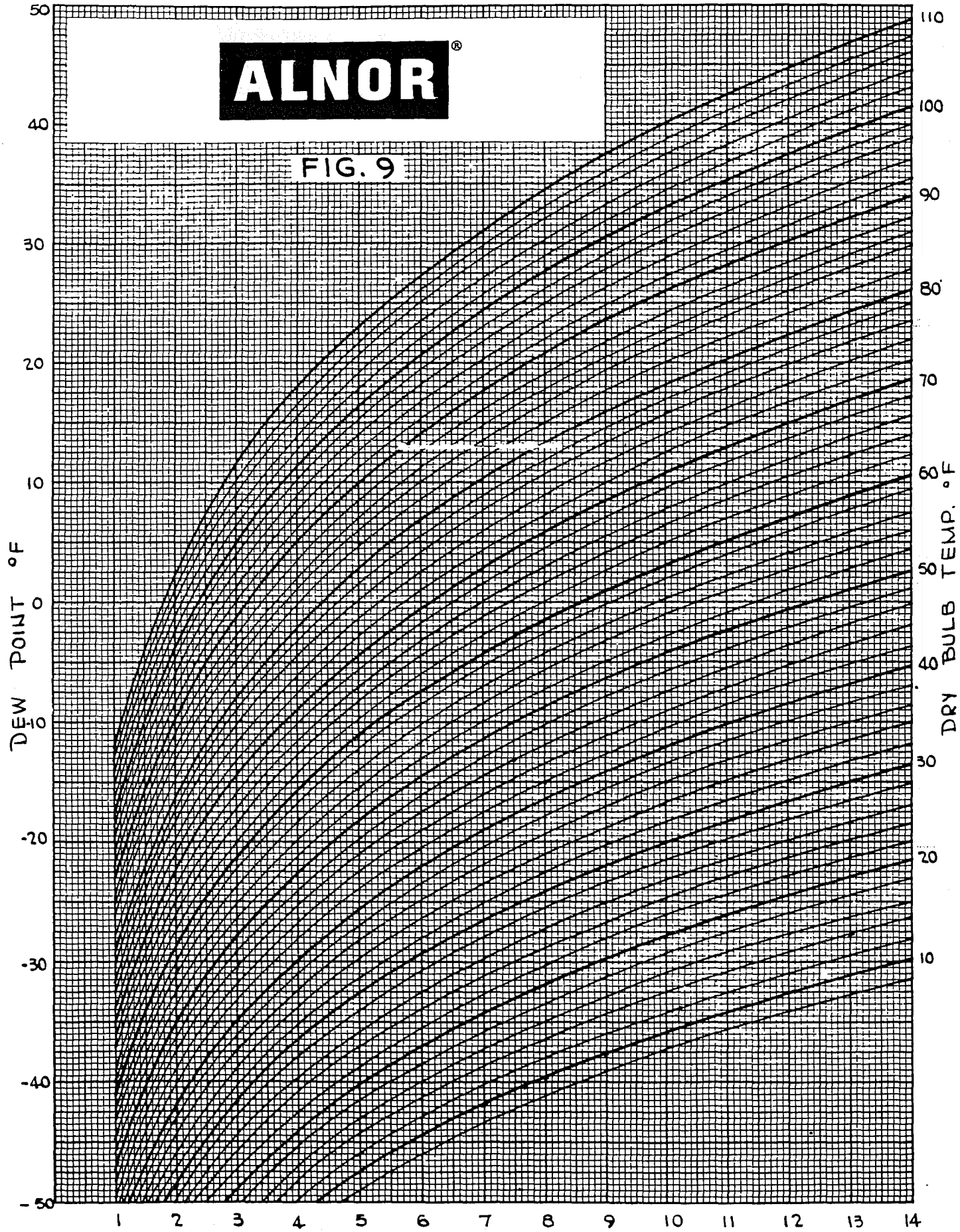

PSYCHROMETRIC CHART

ALNOR®

FIG. 10

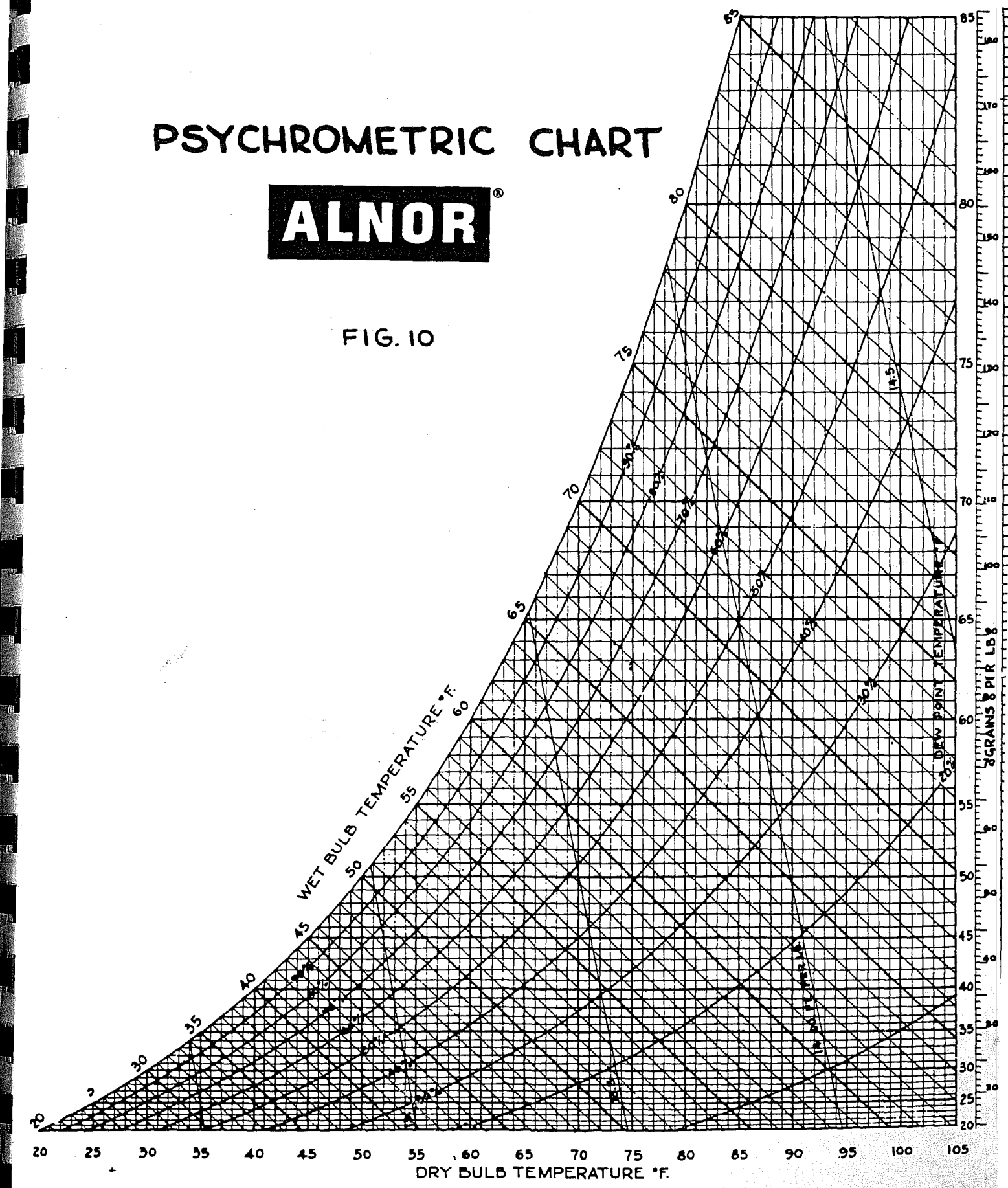

Test For Acceptable Surface Insulation Dryness

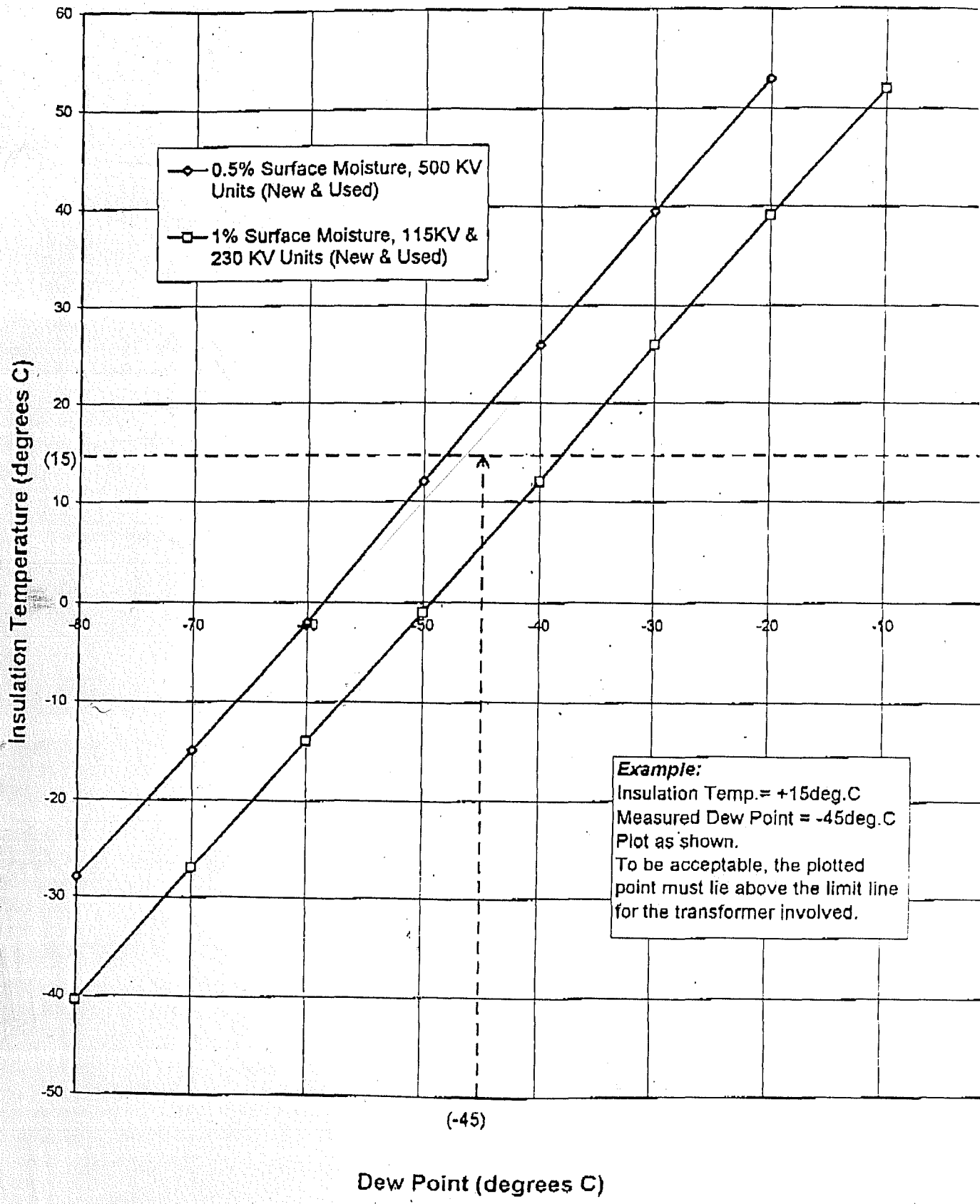

Chart 4.2.4

PUB-NP-064, Attachment
Page 1449

SECTION IX SPECIAL PROTECTION INFORMATION

RESPIRATORY PROTECTION

Not typically required. If exposure exceeds permissible exposure limits wear a self-contained breathing apparatus in compliance with NIOSH/MSHA specifications. Comply with 29CFR 1910.134

VENTILATION

General (mechanical) room ventilation is generally satisfactory. Special. local ventilation may be needed at points where vapors can be expected to exceed exposure limits.

PROTECTIVE GLOVES

For the best protection wear nitrile, neoprene, PVC or natural rubber gloves. Wear additional protective garments were necessary.

EYE PROTECTION

Wear chemical goggles if there is likelihood of contact with eyes.

ADDITIONAL PROTECTIVE CLOTHING OR EQUIPMENT

Boots, aprons, or chemical suits should be used when necessary to prevent skin contact. Eye wash fountains and safety showers should be available for emergency use.

SECTION X SPECIAL PRECAUTIONS

-THIS PRODUCT IS FOR INDUSTRIAL AND LABORATORY USE ONLY
-Do not store in open, unlabeled or mislabeled containers.
-Store in cool, dry place with adequate ventilation.
-Keep away from flames and high temperatures.
-For personal hygiene protection, we recommend that employees wash thoroughly after handling product. Always wash up before eating, smoking, and using toilet facilities.
-Keep out of reach of children.

-HMIS rating HEALTH - 2 FLAMMABILITY - 2 REACTIVITY - 1

DISCLAIMER OF LIABILITY

The information contained herein is, to the best of our knowledge and belief, accurate. However, since the conditions of handling and use are beyond our control, we make no guarantee of the results, and assume no liability for damages incurred by use of this material. All chemicals may present unknown health hazards and should be used with caution. Although certain hazards are described herein, we cannot guarantee that these are the only hazards which exist. Final determination of suitability of the chemical is the sole responsibility of the user. User of any chemical should satisfy themselves that the conditions and methods of use assure that the chemical is used safely. NO REPRESENTATIONS OR WARRANTIES, EITHER EXPRESS OR IMPLIED, OF MERCHANTABILITY, FITNESS FOR A PARTICULAR PURPOSE OR ANY OTHER NATURE ARE MADE HEREUNDER WITH RESPECT TO THE INFORMATION CONTAINED HEREIN OR THE CHEMICAL TO WHICH THE INFORMATION REFERS. It is the responsibility of the user to comply with all applicable federal, state, local laws and regulations.

Meriam Instrument
a Scott Fetzer company

QUICK IDENITIFIER
(as used in label and list)

827 Red Oil

MATERIAL SAFETY DATA SHEET

SECTION I PRODUCT IDENTIFICATION

COMMON NAME
827 Red Oil

PRODUCT MODEL NUMBER
923RO

PRODUCT FILE NUMBER
920:405-923RO-4

PRODUCT USE
Indicating Fluid

MANUFACTURER'S NAME
Meriam Instrument

EMERGENCY PHONE NUMBER
1-800-424-9300

ADDRESS
10920 Madison Ave.

CITY, STATE, ZIP
Cleveland, Ohio 44102

DATE PREPARED
4-23-91

SECTION II HAZARDOUS INGREDIENTS

1. Chemical Name:	Deodorized Kerosine
CAS No:	8008-20-6
OSHA/PEL:	NA
ACGIH/TVL:	50mg/M3 as mist
% :	50
2. Chemical Name:	Petroleum Distillate
CAS No:	64741-77-1
OSHA/PEL:	5mg/M3 as mist
ACGIH/TVL:	5mg/M3 as mist STEL- 10mg/CUM as mist
% :	40
3. Chemical Name:	Petroleum Lube Oil
CAS No:	64742-65-0
OSHA/PEL:	5mg/M3 as mist
ACGIH/TVL:	5mg/M3 as mist STEL- 10mg/CUM as mist
% :	10
4. Chemical Name:	Red Dye
CAS No:	4477-79-6
OSHA/PEL:	NE
ACGIH/TVL:	NE
% :	Trace

10920 Madison Avenue • Cleveland, Ohio 44102 • RCA TLX 212526

SECTION III PHYSICAL & CHEMICAL DATA

BOILING POINT	SPECIFIC GRAVITY (H_2O=1)	VAPOR PRESSURE (mmHg)
370F	0.827	1
VAPOR DENSITY (AIR=1)	**SOLUBILITY IN WATER**	**REACTIVITY IN WATER**
NE	Negligible	NA
EVAPORATION RATE	**MELTING POINT**	**pH**
NE	NE	NA

APPEARANCE & ODOR
Red, Mild odor

SECTION IV FIRE & EXPLOSION DATA

FLASH POINT	METHOD USED	FLAMMABLE LIMITS (in Air % by Vol.)	LEL	UEL
142 F	Closed Cup		1.1	6.0

AUTO-IGNITION TEMPERATURE
NA

EXTINGUISHER MEDIA
CO2 , Dry Chemical

SPECIAL FIRE FIGHTING PROCEDURES
Do not extinguish with water. Evacuate area of all unnecessary personnel. Use NIOSH/MSHA approved self-contained breathing apparatus and other protective equipment.

UNUSUAL FIRE AND EXPLOSION HAZARDS
Carbon oxides and various hydrocarbons formed when burned.

SECTION V REACTIVITY DATA

STABILITY
Stable

CONDITION TO AVOID
Avoid exposure to heat

INCOMPATIBILITY (Materials to Avoid)
Oxygen and strong oxidizing agents

HAZARDOUS DECOMPOSITION PRODUCTS
Carbon oxides and various hydrocarbons may be formed during combustion.

HAZARDOUS POLYMERIZATION
Will no occur

CONDITIONS TO AVOID
NA

SECTION VI HEALTH HAZARDS

ACUTE

EYES
May cause moderate irritation, redness, and tearing.

SKIN CONTACT
May cause slight irritation. May cause severe irritation with repeat or prolonged contact.

INGESTION
May cause irritation to stomach and intestines. May cause vomiting, sedation, central nervous system depression, coma or death.

INHALATION
May cause irritation of nasal and respiratory passages. Mat cause nausea, vomiting, diarrhea, and drowsiness. May be aspirated into the lungs if swallowed which can be fatal.

CHRONIC EFFECTS OF EXPOSURE
May cause blood changes possibly leading to aplastic anemia. May cause liver damage. Kidney damage in laboratory animals has been reported. No comparable health effects is known to humans.

CHEMICAL LISTED AS CARCINOGEN OR POTENTIAL CARCINOGEN

National Toxicology Program	I.A.R.C. Monographs	OSHA
NO	NO	NO

SECTION VII EMERGENCY & FIRST AID PROCEDURE

EYES
Immediately flush eyes with plenty of water for at least 15 minutes while holding eyelids open. Get medical attention.

SKIN CONTACT
Remove contaminated clothing and wash with soap and water. If irritation occurs, get medical attention.

INHALATION
Remove from exposure. If illness or adverse symptoms develop seek medical attention.

INGESTION
DO NOT INDUCE VOMITING. Seek medical attention immediately.

SECTION VIII SPILL OR LEAK PROCEDURES

RESPONSE TO SMALL SPILLS
Absorb with absorbent material. Dispose of properly.

WASTE DISPOSAL
Place in an appropriate disposal facility in compliance with Federal, State, and Local regulations.

PUB-NP-064, Attachment E
Page 1450

FOR ALNOR PART #040 500-000

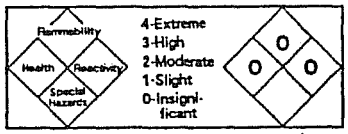

NFPA FIRE HAZARD SYMBOL†
See NFPA 704 for detailed explanation.

MATERIAL SAFETY DATA SHEET

No.: 2198 Rev. No.: 2
Date Revised: 04/30/87

Manville

I. PRODUCT IDENTIFICATION

Trade Name(s) : SLIVER PRODUCTS: BULK, STRAND, ROVING
Generic Name: FIBROUS GLASS
Chemical Name: MIXTURE

CAS #: 65997-17-3
Formula: MIXTURE

Manufacturer: MANVILLE BUILDING MATERIALS CORP.
Address: P.O.BOX 5108
City: DENVER State: CO Zip: 80217

Telephone: (303)978-3120
Emergency:

II. PRODUCT INGREDIENTS

INGREDIENT NAME	CAS NUMBER	%	PEL and TLV (except as noted)
FIBROUS GLASS	65997-17-3	>99	5 mg/M³ - NUISANCE RESPIRABLE DUST (OSHA) TLV-TWA: 10mg/m³ (DUST) (ACGIH)
SIZING/LUBRICANT	NONE	<1	

III. PHYSICAL DATA

Appearance and Odor: WHITE SOFT RESILIENT GLASS FIBERS IN BULK STAPLE OR CONTINUOUS ROVING.

Boiling Point: NA
Vapor Pressure: NA
Water Solubility (%) : 0
Vapor Density (Air=1) : NA

Evaporation Rate (NA = 1) : NA
Specific Gravity (water = 1) : 2.52
Melting Point: >1600° F
% Volatile by Volume: 0

IV. FIRE AND EXPLOSION DATA

Flash Point (Method) : NONFLAMMABLE
Flammable Limits: LEL: NA % UEL: NA %
Extinguishing Media: NA
Unusual Fire or Explosion Hazards: NONE

NFPA Flammable/Combustible Liquid Classification: NA
Auto-Ignition Temperature: NA

Special Fire-Fighting Procedures: NONE

V. HEALTH HAZARDS A. Summary/Risks

Summary: CURRENT ANIMAL INHALATION STUDIES INDICATE THAT GLASS FIBERS DO NOT PRESENT A HAZARD TO HEALTH. SOME EPIDEMIOLOGICAL STUDIES WITH FACTORY WORKERS ARE INCONCLUSIVE (SEE CHRONIC HEALTH EFFECTS, BELOW).
THIS PRODUCT IS NOT CONSIDERED A CARCINOGEN BY NTP, IARC AND OSHA.

Medical conditions which may be aggravated: AS WITH ANY DUST, PRE-EXISTING UPPER RESPIRATORY AND LUNG DISEASES MAY BE AGGRAVATED.
Target Organ(s) : LUNGS, SKIN AND EYES.
Acute Health Effects: PRODUCT IS A MECHANICAL IRRITANT FOR SKIN, EYES AND UPPER RESPIRATORY SYSTEM.

Chronic Health Effects: ALTHOUGH INCONCLUSIVE, SOME RECENT INDUSTRY SUPPORTED RESEARCH INDICATES THAT MFG WORKERS WHO WERE FIRST EMPLOYED IN THE MANUFACTURE OF FIBER GLASS WOOL & MINERAL WOOL 30 OR MORE YEARS AGO HAVE A SOMEWHAT HIGHER RISK OF LUNG CANCER THAN THE GENERAL AVERAGE

Primary Entry Route(s) : INHALATION, SKIN AND EYE CONTACT.

V. HEALTH HAZARDS B. Signs/Symptoms of Overexposure

Inhalation: IRRITATION OR SORENESS IN THROAT & NOSE. IN EXTREME EXPOSURES SOME CONGESTION MAY OCCUR.

Skin Contact: IRRITATION OR RASH.

Skin Absorption: NA

Ingestion: CAUSES TEMPORARY IRRITATION TO GI TRACT.

Eyes: TEMPORARY IRRITATION OR INFLAMMATION.

V. HEALTH HAZARDS C. First Aid/Emergency Procedures

Inhalation: REMOVE TO FRESH AIR. DRINK WATER TO CLEAR THROAT AND BLOW NOSE TO EVACUATE FIBERS.

Skin Contact: WASH AFFECTED AREAS GENTLY WITH SOAP & WARM WATER.

Skin Absorption: NA

Ingestion: NA

Eyes: FLUSH EYES WITH COPIOUS QUANTITIES OF WATER A MINIMUM OF 15 MINUTES. IF IRRITATION PERSISTS CONSULT A PHYSICIAN.

VI. REACTIVITY DATA

MATERIAL IS STABLE. HAZARDOUS POLYMERIZATION CANNOT OCCUR.
Chemical Incompatibilities: HYDROFLUORIC ACID.
Conditions to Avoid: NONE

Hazardous Decomposition Products: NONE

VII. SPILL OR LEAK PROCEDURES

Procedures for Spill/Leak: VACUUM CLEAN DUST. IF SWEEPING IS NECESSARY USE A DUST SUPPRESSANT.

Waste Management: WASTES GENERATED DURING APPLICATION, DEMOLITION, OR SPILLAGE ARE NOT HAZARDOUS WASTES AS DEFINED BY RCRA (40 CFR PART 261). COMPLY WITH FEDERAL, STATE & LOCAL REGULATIONS. METHOD OF DISPOSAL-LANDFILL. RQ - N/A.

VIII. SPECIAL PROTECTION INFORMATION

Goggles: OR SAFETY GLASSES ARE RECOMMENDED.
Gloves: NOT NORMALLY REQUIRED.
Respirator: USE A RESPIRATOR SUCH AS 3M MODEL 9900 OR EQUIVALENT FOR PROTECTION AGAINST NUISANCE DUSTS WHEN HANDLING OR WORKING WITH THIS PRODUCT.
Ventilation: USE SUFFICIENT NATURAL OR MECHANICAL VENTILATION TO MAINTAIN AIRBORNE CONC. BELOW PEL/TLV.

Other: WEAR LOOSE FITTING, LONG SLEEVED CLOTHING.

Special Considerations for repair/maintenance of contaminated equipment:

IX. SPECIAL PRECAUTIONS

Storage Segregation Hazard Classes: NA
*** ALWAYS SEGREGATE MATERIALS BY MAJOR HAZARD CLASS ***
Special Handling/Storage: NONE

Special Workplace Engineering Controls: ADEQUATE VENTILATION TO KEEP DUST LEVEL TO BELOW PEL/TLV.

Other:

Prepared/Revised by: KENNETH A. ROBERTS **Title:** MANAGER, PRODUCT SAFETY

As of the date of preparation of this document, the foregoing information is believed to be accurate and is provided in good faith to comply with applicable federal and state law(s). However,

INSTRUCTIONS FOR RETURN

Damaged in Transit

All shipments are carefully examined by Alnor Quality Assurance and carefully packed for shipment. They are insured in the customer's name with the carrier. On receipt, if the shipping container appears to have been damaged during shipment, the instrument should be thoroughly inspected. The delivering carrier's papers should be signed noting the apparent damage.

If the instrument itself has been damaged, a claim should be promptly filed against the carrier by the customer. Alnor will assist the customer by supplying all pertinent shipping information; however the claim must be filed by the insured.

If the instrument is damaged beyond use, a new order should be placed with Alnor while awaiting reimbursement from the carrier for the damaged instrument.

Malfunction

Please follow these steps should you require factory service or repair of your Alnor Instrument:

1. a. Telephone Alnor Instrument Company Repair Department for cost of repair or recalibration, Authorization For Repair (AFR) number and shipping instructions.

   b. If you require recalibration, determine whether you prefer:

   --Certificate of Calibration, no data (states instrument checked and found to be within accuracy claimed and specifications listed in current literature).

   --Certificate of Traceability to NIST (National Institute for Standards and Technology, formerly NBS) with data (states instrument compared with factory standard traceable to NIST, lists of calibration data, i.e., "Standard reads..."and "This instrument reads..."

2. Obtain a Purchase Order or purchase order number from your Purchasing Department showing instrument model number and cost of repair and/or recalibration.

3. Securely package your instrument in a strong container surrounded by at least two inches of suitable shock absorbing material. Include the Purchase Order or reference the Purchase Order on your packing slip.*

4. Mark the outside of the shipping container with the AFR Control number.

5. Forward the instrument prepaid to the following address:

ALNOR INSTRUMENT COMPANY
7555 N. Linder Avenue
Skokie, IL 60077
Attn: Repair Department

*Please note that instruments received improperly marked or without an accompanying Purchase Order may be returned at your expense.

Please also note that AFR# will be cancelled if the instrument is not received by ALNOR within 60 days.

REFERENCE
POWER CABLES AND ACCESSORIES

Created by: M. Rideout
Revised by: B. Ropson
Reviewed by: G. Samms
Approved by: G. Samms

MSR016-1: Power Cable and Pothead Grounding

Power cables can be damaged by ground fault currents flowing in their sheaths. To prevent this, it is necessary to have the pothead body and lead sheath solidly grounded at one end only and isolated from ground at the other end. At the grounded end, a separate copper conductor should connect the cable lead sheath to ground.

Our practice is to consider the end that terminates on a wood pole to be the isolated end and to solidly ground the pothead and cable sheath at the other end.

In cases where the mounting structures at both ends of the cable are grounded, the pothead body is isolated from ground at one end. Where the pothead body is isolated from ground, sufficient clearance should be provided with insulating spacers to prevent arcing under fault conditions. At least 6.35mm (1/4 in.) spacing is required for 15kV and 12.7mm (1/2 in.) spacing for 25kV. An alternative method for insulating is to have the pothead body mounted on a fiber board. Care should also be taken to ensure that sufficient outside insulation is left on the cable to prevent the lead sheath from touching ground.

On all PILC cables, an external copper braid strap is connected from the lead sheath of the cable to each of the two pothead bodies. The strap is wiped to the cable sheath with lead and connected to a bolt on the pothead body (e.g. a bolt on the stuffing box). This strap provides an additional and better path for fault currents than the much smaller grounding strap inside the pothead.

Existing incoming (transformer secondary) cables that do not have the external braid strap between the cable sheath and the pothead body may not necessarily be unsatisfactory; such installations should be brought to the attention of the Substation Asset Management Group for consideration. The added security of the strap may or may not warrant the extra work and cost involved in adding to some existing installations. However, the strap should be installed on all new installations and installations that have to be worked on for some reason.

The following table indicates where cables should be grounded and/or ungrounded and where the external strap is required.

	Grounded End			Ungrounded End		
Cable	**Pothead Body**	**Cable Sheath**	**External Strap (Pothead to Sheath)**	**Pothead Body**	**Cable Sheath**	**External Strap (Pothead to Sheath)**
Feeder	Grounded	Grounded	Required	Ungrounded	Ungrounded	Required
Incoming	Grounded	Grounded	Required	Ungrounded	Ungrounded	Required

REFERENCE
POWER CABLES AND ACCESSORIES

MSR016-2: Reservoir Pressures for Oil-Filled Cables

Newfoundland Power has two pressurized oil-filled cable systems in service – one at St. John's Mai Substation and one at Memorial University of Newfoundland Substation.

The pressure gauges on the system at Main Substation are calibrated in pounds per square inch (psi) and should indicate a pressure of somewhere between 35psi and 71psi. The low and high pressure alarms are set at the above mentioned pressures.

The pressure gauges on the system at MUN Substation are calibrated in bars (a gauge on one reservoir indicates pounds per square inch) and should indicate a pressure between 0.5 and 1.2 bars. The low and high pressure alarms are set at the above mentioned pressures. The psi gauge should indicate somewhere between 7.25 psi and 17.4 psi.

Conversion Equivalents:

1 bar = 100 kPa = 14.5 psi

Allowable pressure range at Main Substation:

35 psi (240 kPa) to 71 psi (490 kPa)

Allowable pressure range at MUN Substation:

0.5 bar (7.25 psi or 50 kPa) to 1.2 bar (17.4 psi or 120 kPa)

The pressure readings on these systems should be observed closely. Changes or gradual downward or upward trends in pressure indicate abnormal conditions. Such changes should be brought to the attention of the Substation Asset Management Group.

IEEE Standards

IEEE Std 400.2™-2004

400.2™

IEEE Guide for Field Testing of Shielded Power Cable Systems Using Very Low Frequency (VLF)

IEEE Power Engineering Society

Sponsored by the
Insulated Conductors Committee

IEEE

3 Park Avenue, New York, NY 10016-5997, USA

8 March 2005

Print: SH95288
PDF: SS95288

Authorized licensed use limited to: Michael Comerford. Downloaded on June 21,2012 at 12:32:38 UTC from IEEE Xplore. Restrictions apply.

Recognized as an
American National Standard (ANSI)

IEEE Std 400.2™-2004

IEEE Guide for Field Testing of Shielded Power Cable Systems Using Very Low Frequency (VLF)

Sponsor

Insulated Conductors Committee
of the
IEEE Power Engineering Society

Approved 2 February 2005

American National Standards Institute

Approved 23 September 2004

IEEE-SA Standards Board

Abstract: This guide describes very low frequency (VLF) withstand and diagnostic tests and the measurements that are performed in the field on shielded power cable systems. Whenever possible, cable systems are treated in a similar manner to individual cables. Tables are included as an aid to identifying the effectiveness of the VLF test for various cable system insulation problems.
Keywords: cable fault locating, cable system testing, cable testing, dielectric spectroscopy, grounding, hipot testing, partial discharge testing, proof testing, safey, tan delta testing, very low frequency (VLF) testing

The Institute of Electrical and Electronics Engineers, Inc.
3 Park Avenue, New York, NY 10016-5997, USA

Copyright © 2005 by the Institute of Electrical and Electronics Engineers, Inc.
All rights reserved. Published 8 March 2005. Printed in the United States of America.

IEEE is a registered trademark in the U.S. Patent & Trademark Office, owned by the Institute of Electrical and Electronics Engineers, Incorporated.

National Electrical Safety Code and NESC are both registered trademarks in the U.S. Patent & Trademark Office owned by the Institute of Electrical and Electronics Engineers, Inc.

Print: ISBN 0-7381-4512-2 SH95288
PDF: ISBN 0-7381-4513-0 SS95288

No part of this publication may be reproduced in any form, in an electronic retrieval system or otherwise, without the prior written permission of the publisher.

Authorized licensed use limited to: Michael Comerford. Downloaded on June 21,2012 at 12:32:38 UTC from IEEE Xplore. Restrictions apply.

IEEE Standards documents are developed within the IEEE Societies and the Standards Coordinating Committees of the IEEE Standards Association (IEEE-SA) Standards Board. The IEEE develops its standards through a consensus development process, approved by the American National Standards Institute, which brings together volunteers representing varied viewpoints and interests to achieve the final product. Volunteers are not necessarily members of the Institute and serve without compensation. While the IEEE administers the process and establishes rules to promote fairness in the consensus development process, the IEEE does not independently evaluate, test, or verify the accuracy of any of the information contained in its standards.

Use of an IEEE Standard is wholly voluntary. The IEEE disclaims liability for any personal injury, property or other damage, of any nature whatsoever, whether special, indirect, consequential, or compensatory, directly or indirectly resulting from the publication, use of, or reliance upon this, or any other IEEE Standard document.

The IEEE does not warrant or represent the accuracy or content of the material contained herein, and expressly disclaims any express or implied warranty, including any implied warranty of merchantability or fitness for a specific purpose, or that the use of the material contained herein is free from patent infringement. IEEE Standards documents are supplied "**AS IS**."

The existence of an IEEE Standard does not imply that there are no other ways to produce, test, measure, purchase, market, or provide other goods and services related to the scope of the IEEE Standard. Furthermore, the viewpoint expressed at the time a standard is approved and issued is subject to change brought about through developments in the state of the art and comments received from users of the standard. Every IEEE Standard is subjected to review at least every five years for revision or reaffirmation. When a document is more than five years old and has not been reaffirmed, it is reasonable to conclude that its contents, although still of some value, do not wholly reflect the present state of the art. Users are cautioned to check to determine that they have the latest edition of any IEEE Standard.

In publishing and making this document available, the IEEE is not suggesting or rendering professional or other services for, or on behalf of, any person or entity. Nor is the IEEE undertaking to perform any duty owed by any other person or entity to another. Any person utilizing this, and any other IEEE Standards document, should rely upon the advice of a competent professional in determining the exercise of reasonable care in any given circumstances.

Interpretations: Occasionally questions may arise regarding the meaning of portions of standards as they relate to specific applications. When the need for interpretations is brought to the attention of IEEE, the Institute will initiate action to prepare appropriate responses. Since IEEE Standards represent a consensus of concerned interests, it is important to ensure that any interpretation has also received the concurrence of a balance of interests. For this reason, IEEE and the members of its societies and Standards Coordinating Committees are not able to provide an instant response to interpretation requests except in those cases where the matter has previously received formal consideration. At lectures, symposia, seminars, or educational courses, an individual presenting information on IEEE standards shall make it clear that his or her views should be considered the personal views of that individual rather than the formal position, explanation, or interpretation of the IEEE.

Comments for revision of IEEE Standards are welcome from any interested party, regardless of membership affiliation with IEEE. Suggestions for changes in documents should be in the form of a proposed change of text, together with appropriate supporting comments. Comments on standards and requests for interpretations should be addressed to:

Secretary, IEEE-SA Standards Board

445 Hoes Lane

Piscataway, NJ 08854

USA

NOTE—Attention is called to the possibility that implementation of this standard may require use of subject matter covered by patent rights. By publication of this standard, no position is taken with respect to the existence or validity of any patent rights in connection therewith. The IEEE shall not be responsible for identifying patents for which a license may be required by an IEEE standard or for conducting inquiries into the legal validity or scope of those patents that are brought to its attention.

Authorization to photocopy portions of any individual standard for internal or personal use is granted by the Institute of Electrical and Electronics Engineers, Inc., provided that the appropriate fee is paid to Copyright Clearance Center. To arrange for payment of licensing fee, please contact Copyright Clearance Center, Customer Service, 222 Rosewood Drive, Danvers, MA 01923 USA; +1 978 750 8400. Permission to photocopy portions of any individual standard for educational classroom use can also be obtained through the Copyright Clearance Center.

Authorized licensed use limited to: Michael Comerford. Downloaded on June 21,2012 at 12:32:38 UTC from IEEE Xplore. Restrictions apply.

Introduction

This introduction is not part of IEEE Std 400.2-2004, IEEE Guide for Field Testing of Shielded Power Cable Systems Using Very Low Frequency (VLF).

A significant investment with respect to electric power distribution is in cable systems. A high degree of reliability and reasonable life expectancy of the cable systems are necessary. In order to guarantee optimum performance of the power cable system, standards and guidelines have been developed which address the specific testing requirements for service-aged extruded and laminated dielectric insulation. This Guide is one part of an omnibus Guide that discusses known techniques for performing electrical tests in the field on shielded power cable systems.

Notice to users

Errata

Errata, if any, for this and all other standards can be accessed at the following URL: http://standards.ieee.org/reading/ieee/updates/errata/index.html. Users are encouraged to check this URL for errata periodically.

Interpretations

Current interpretations can be accessed at the following URL: http://standards.ieee.org/reading/ieee/interp/index.html.

Patents

Attention is called to the possibility that implementation of this standard may require use of subject matter covered by patent rights. By publication of this standard, no position is taken with respect to the existence or validity of any patent rights in connection therewith. The IEEE shall not be responsible for identifying patents or patent applications for which a license may be required to implement an IEEE standard or for conducting inquiries into the legal validity or scope of those patents that are brought to its attention.

Copyright © 2005 IEEE. All rights reserved.

Authorized licensed use limited to: Michael Comerford. Downloaded on June 21,2012 at 12:32:38 UTC from IEEE Xplore. Restrictions apply.

Participants

At the time this standard was completed, Working Group C 18 of the IEEE Insulated Conductors Committee had the following membership.

John Densley, *Chair*
Robert Schlesinger, *Vice Chair*

Torben Aabo
Martin Baur
Michael G. Bayer
David T. Bogden
Alain T. Bollinger
Kent Brown
Jack E. Cherry
Robert L. Cunningham
Robert E. Fleming
Hans Gnerlich
John M. Hans
Stanley V. Heyer
John Hinckle
Carlos Katz
Frederick B. Koch
William Larzelere
Allen G. MacPhail
William McDermid
Ted Nishioka
Henning Oetjen
James P. Pachot
Ralph Patterson
Serge Pelissou
Frank Petzold
Alain Pinet
Ronald J. Ponist
John S. Rector
Johannes Rickmann
Ewell T. Robeson
Lawrence W. Salberg
Candelario Saldivar
Nagu N. Srinivas
William A. Thue
Jukka T. Tiainen
Harry T. Vollkommer
Mark Walton

The following members of the individual balloting committee voted on this standard. Balloters may have voted for approval, disapproval, or abstention.

Torben Aabo
Roy Alexander
Earle C. Bascom III
Martin Baur
Thomas Blair
Kenneth Bow
A. James Braun
Jeffrey Britton
Kent Brown
John Cooper
Tommy Cooper
Russ Dantzler
Byron Davenport
Matthew Davis
John R. Densley
Randall Dotson
Donald Dunn
Amir El-Sheikh
Gary Engmann
Marcel Fortin
Richie Harp
Wolfgang B. Haverkamp
Lauri J. Hiivala
Ajit Hiranandani
Edward Horgan Jr.
David W. Jackson
Joseph Jancauskas
Lawrence Kelly
Frederick B. Koch
Robert Konnik
Daniel Kremer
William Larzelere
Maurice Linker
Bill Lockley
Lisardo Lourido
Gregory Luri
Glen Luzzi
John Merando
G. Michel
Art Neubauer
Neal Parker
Thomas Pekarek
Robert A. Resuali
Johannes Rickmann
James Ruggieri
Robert Schlesinger
Mike Smalley
Joseph Snow
Henry Soleski
Michael Walker
Mark Walton
Daniel Ward
William D. Wilkens
James Wilson

Copyright © 2005 IEEE. All rights reserved.

Authorized licensed use limited to: Michael Comerford. Downloaded on June 21,2012 at 12:32:38 UTC from IEEE Xplore. Restrictions apply.

When the IEEE-SA Standards Board approved this standard on 23 September 2004, it had the following membership:

Don Wright, *Chair*
Steve M. Mills, *Vice Chair*
Judith Gorman, *Secretary*

Chuck Adams
Stephen Berger
Mark D. Bowman
Joseph A. Bruder
Bob Davis
Roberto de Marca Boisson
Julian Forster*
Arnold M. Greenspan
Mark S. Halpin
Raymond Hapeman
Richard J. Holleman
Richard H. Hulett
Lowell G. Johnson
Joseph L. Koepfinger*
Hermann Koch
Thomas J. McGean
Daleep C. Mohla
Paul Nikolich
T. W. Olsen
Ronald C. Petersen
Gary S. Robinson
Frank Stone
Malcolm V. Thaden
Doug Topping
Joe D. Watson

*Member Emeritus

Also included are the following nonvoting IEEE-SA Standards Board liaisons:

Satish K. Aggarwal, *NRC Representative*
Richard DeBlasio, *DOE Representative*
Alan Cookson, *NIST Representative*

Michelle Turner
IEEE Standards Project Editor

Copyright © 2005 IEEE. All rights reserved.

Authorized licensed use limited to: Michael Comerford. Downloaded on June 21,2012 at 12:32:38 UTC from IEEE Xplore. Restrictions apply.

CONTENTS

1. Overview 1

1.1 Scope 1
1.2 Purpose 1

2. Normative references 2

3. Definitions and acronyms 2

3.1 Definitions 2
3.2 Acronyms 3

4. Safety 4

4.1 Safety practices 4
4.2 Grounding 4

5. Very low frequency (VLF) testing 5

5.1 General VLF testing 9
5.2 VLF testing with cosine-rectangular/bipolar pulse waveform 11
5.3 VLF testing with sinusoidal waveform 12
5.4 VLF testing with regulated positive and negative DC voltages 13
5.5 Dissipation factor/differential dissipation factor/leakage current/harmonic loss current tests witwith VLF sinusoidal waveform 14
5.6 PD test with VLF sinusoidal waveform 16
5.7 Dielectric spectroscopy with VLF sinusoidal waveform 18

6. Conclusions 19

Annex A (normative) Wave shapes of VLF testing voltages 20

Annex B (informative) Bibliography 21

Authorized licensed use limited to: Michael Comerford. Downloaded on June 21,2012 at 12:32:38 UTC from IEEE Xplore. Restrictions apply.

IEEE Guide for Field Testing of Shielded Power Cable Systems Using Very Low Frequency (VLF)

1. Overview

This guide provides a description of the methods and practices to be used in the application of very low frequency (VLF) high voltage excitation for field testing of shielded power cable systems (Bach [B1][1] and [B2]; Baur, Mohaupt, and Schlick [B5]; Gnerlich [B8]). VLF testing techniques, effective for a broad range of cable types, provide a new method of evaluation, and help to fill the need for more complete information on the cable system condition while minimizing or eliminating some potential adverse charging effects of the direct voltage high-potential test method (commonly known as the DC Hi-Pot test) (Eager [B6]; Groenefeld, von Olshausen, and Selle [B9]; Steennis, Boone, and Montfoort [B19]). This guide addresses VLF testing in the frequency range from 0.01 Hz to 1 Hz.

The information contained in this guide is intended to provide the methodology, voltages, and factors to be considered when utilizing VLF testing, whether as a withstand test or as a diagnostic test. For general information regarding other field testing methods, refer to the omnibus standard, IEEE Std 400™.[2]

1.1 Scope

This guide describes very low frequency withstand and diagnostic tests and measurements that are performed in the field on shielded medium voltage cables with extruded and laminated dielectric insulation. Whenever possible, cable systems are treated in a similar manner to individual cables. Charts are included as an aid in identifying the effectiveness of the VLF test for various cable insulation problems.

1.2 Purpose

This guide is intended to provide troubleshooting and testing personnel with information to test shielded medium voltage cable systems using very low frequency techniques.

[1] The numbers in brackets correspond to those of the bibliography in Annex B.
[2] Information on references can be found in Clause 2.

Copyright © 2005 IEEE. All rights reserved.

Authorized licensed use limited to: Michael Comerford. Downloaded on June 21,2012 at 12:32:38 UTC from IEEE Xplore. Restrictions apply.

2. Normative references

This following referenced documents are indispensable for the application of this document. For dated references, only the edition cited applies. For undated references, the latest edition of the referenced document (including any amendments or corrigenda) applies.

Accredited Standards Committee C2-2002, National Electrical Safety Code® (NESC®).[3]

IEC 60060-1, High-Voltage Test Techniques—Part 1: General Definitions and Test Requirements.[4]

IEC 60060-2, High Voltage Test Techniques—Part 2: Measuring Systems.

IEC 60060-3, High Voltage Test Techniques—Part 3: Definitions and requirements for on-site tests.

IEC 60885-3, Electrical test methods for electric cables. Part 3: Test Methods for Partial Discharge Measurements on Lengths of Extruded Power Cables.

IEC 61230, Live Working—Portable Equipment for Earthing or Earthing and Short-Circuiting.

IEEE Std 4™, IEEE Standard Techniques for High Voltage Testing.[5, 6]

IEEE Std 400, IEEE Guide for Field Testing and Evaluation of the Insulation of Shielded Power Cable Systems.

IEEE Std 433™, IEEE Recommended Practice for Insulation Testing of Large AC Rotating Machinery with High Voltage at Very Low Frequency.

IEEE Std 510™, IEEE Recommended Practices for Safety in High-Voltage and High-Power Testing.

3. Definitions and acronyms

3.1 Definitions

For the purposes of this guide, the following terms and definitions apply. *The Authoritative Dictionary of IEEE Standards,* Seventh Edition [B14], should be referenced for terms not defined in this clause.

3.1.1 acceptance test: A field test made after cable system installation, including terminations and joints, but before the cable system is placed in normal service. The test is intended to detect installation damage and to show any gross defects or errors in installation of other system components.

3.1.2 breakdown: Disruptive discharge through insulation.

3.1.3 cross linked polyethylene (XLPE): A polymer used as electrical insulation in cables.

[3] National Electrical Safety Code and NESC are both registered trademarks owned by the Institute of Electrical and Electronics Engineers, Inc.
[4] IEC publications are available from the Sales Department of the International Electrotechnical Commission, Case Postale 131, 3, rue de Varembé, CH-1211, Genève 20, Switzerland/Suisse (http://www.iec.ch/). IEC publications are also available in the United States from the Sales Department, American National Standards Institute, 11 West 42nd Street, 13th Floor, New York, NY 10036, USA.

[5] The IEEE standards or products referred to in Clause 2 are trademarks owned by the Institute of Electrical and Electronics Engineers, Inc.
[6] IEEE publications are available from the Institute of Electrical and Electronics Engineers, 445 Hoes Lane, P.O. Box 1331, Piscataway, NJ 08855-1331, USA (http://standards.ieee.org/).

Copyright © 2005 IEEE. All rights reserved.

Authorized licensed use limited to: Michael Comerford. Downloaded on June 21,2012 at 12:32:38 UTC from IEEE Xplore. Restrictions apply.

3.1.4 diagnostic test: A field test made during the operating life of a cable system. It is intended to determine and locate degradation that may cause cable and accessory failure.

3.1.5 electrical trees: Tree-like growths, consisting of nonsolid or carbonized microchannels, that can occur at stress enhancements such as protrusions, contaminants, voids, or water trees subjected to electrical stress for extended time periods. At the site of an electrical tree the insulation is damaged irreversibly, partial discharge may be present, and complete insulation breakdown may be only a question of time.

3.1.6 ethylene propylene rubber (EPR): A type of polymer used as electrical insulation in cables and accessories.

3.1.7 extruded dielectrics: Insulation such as polyethylene (PE), cross linked polyethylene (XLPE), tree retardant cross linked polyethylene (TRXLPE), ethylene propylene rubber (EPR), etc. applied using an extrusion process.

3.1.8 installation test: A field test conducted after cable installation but before jointing (splicing) or terminating. The test is intended to detect shipping, storage, or installation damage.

3.1.9 laminated dielectrics: Insulation formed in layers, typically from tapes of either cellulose paper or polypropylene or a combination of the two. An example is the paper insulated lead covered (PILC) cable design.

3.1.10 maintenance test: A field test made during the operating life of a cable system. It is intended to detect deterioration of the system and to check the serviceability so that suitable maintenance procedures can be initiated.

3.1.11 paper insulated lead covered (PILC): A cable design.

3.1.12 polyethylene (PE): A polymer used as electrical insulation in cables.

3.1.13 shielded cable: A cable in which an insulated conductor is enclosed in a conducting envelope.

3.1.14 tree retardant cross linked polyethylene (TRXLPE): A polymer used as electrical insulation in cables.

3.1.15 water trees: Chemically modified, in the presence of moisture, dentritic pattern of electro-oxidation, that can occur at stress enhancements such as protrusions, contaminants, or voids in polymeric materials subjected to electrical stress and moisture. At the site of a water tree, the insulation is degraded, partial discharge is not present, and complete insulation breakdown may subsequently occur when the water tree induces an electrical tree. The water tree growth under service conditions is a very slow process, usually taking many years to completely penetrate the insulation from the inside or outside. While there have been no cases documented of partial discharge detectable in the field from water trees, water trees can convert to electrical trees as a result of a lightning impulse, switching surges, or excessive test voltage levels.

3.2 Acronyms

EPR	ethylene propylene rubber
PE	polyethylene
PILC	paper insulated lead covered
TRXLPE	tree retardant cross linked polyethylene
VLF	very low frequency (for the purpose of this guide 0.01 Hz to 1.0 Hz)
VLF-DF	very low frequency—dissipation factor
VLF-DS	very low frequency—dielectric spectroscopy
VLF-LC	very low frequency—leakage current

Copyright © 2005 IEEE. All rights reserved.

Authorized licensed use limited to: Michael Comerford. Downloaded on June 21,2012 at 12:32:38 UTC from IEEE Xplore. Restrictions apply.

VLF-LCH	very low frequency—loss current harmonics
VLF-PD	very low frequency—partial discharge
VLF-PDEV	very low frequency partial discharge extinction voltage
VLF-PDIV	very low frequency partial discharge inception voltage
VLF-DTD	very low frequency differential dissipation factor (delta tan delta)
VLF-TD	very low frequency dissipation factor (tan delta)
XLPE	cross linked polyethylene

4. Safety

4.1 Safety practices

When testing cables, personnel safety is of utmost importance. All cable and equipment tests shall be performed on isolated and de-energized systems, except where otherwise specifically required and authorized. Some switches may be connected to a cable end and serve to isolate the cable from the rest of the system. The ability of the switch to sustain the VLF test voltage while the other end is under normal operating voltage shall be checked with the manufacturer. The safety practices shall include, but not be limited to, the following requirements:

a) Applicable user safety operating procedures

b) IEEE Std 510

c) NFPA 70E—Standard for Electrical Safety Requirements for Employee Workplaces

d) Applicable state and local safety operating procedures

e) Protection of utility and customer property

While testing, one or more cable ends will be remote from the testing site, therefore, before testing is begun

— Cable ends under test must be cleared and guarded.

— Cables must be de-energized and grounded.

At the conclusion of high-voltage testing, attention should be given to

— Discharging cables and cable systems including test equipment

— Grounding requirements for cables and test equipment to eliminate the aftereffects of recharging the cables due to dielectric absorption and capacitance characteristics

4.2 Grounding

Cable systems can be considered de-energized and grounded when a conductor and metallic shield are connected to system ground at the test site and, if possible, at the far end of the cable.

When testing, a **single system ground at the test site** is recommended (see Figure. 1). The shield or concentric conductor of the cable to be tested is connected to a system ground. If this connection is missing, deteriorated, or has been removed, it must be replaced at this time. **A safety ground cable must connect the instrument case with the system ground**. If the test instrument is a high voltage device, the

Copyright © 2005 IEEE. All rights reserved.

Authorized licensed use limited to: Michael Comerford. Downloaded on June 21,2012 at 12:32:38 UTC from IEEE Xplore. Restrictions apply.

safety ground cable should be at least a braided or stranded #2 AWG (34 mm^2) copper cable capable of carrying available fault current. Only after the safety ground cable is in place, should the test cable be connected to the conductor and metallic shield; the conductor-to-ground connection shall now be removed.

Should a local ground be advisable or required for the test equipment, the case ground must remain connected to the system ground in order to maintain an acceptable single-ground potential.

Care should be taken to ensure that all ground connections could not be disconnected accidentally. Grounding connections that can be securely tightened are recommended. Portable ground clamps and grounding assemblies built and tested per IEC 61230 are recommended.

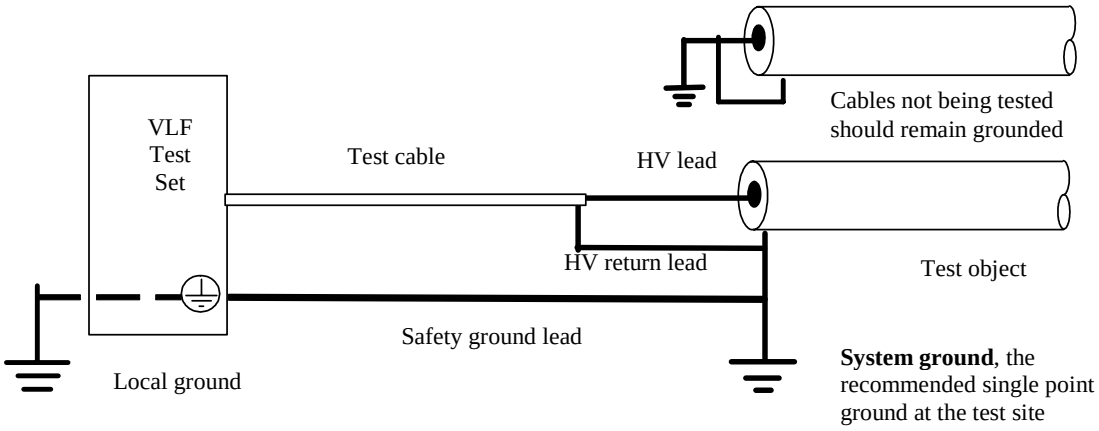

Figure 1— Recommended test hook-up diagram

5. Very low frequency (VLF) testing

VLF testing methods utilize AC signals in the frequency range from 0.01Hz to 1 Hz. VLF testing methods can be categorized as withstand or diagnostic (Gnerlich [B8]). In withstand testing, the test object must withstand a specified voltage applied across the insulation for a specified period of time without breakdown of the insulation. The magnitude of the withstand voltage is usually greater than that of the applied voltage. If the cable insulation is sufficiently degraded a breakdown can occur. The cable system may be repaired and the insulation retested until it passes the withstand test. Diagnostic testing allows the determination of the relative amount of degradation of a cable system section and establishes, by comparison with figures of merit or accumulated data, whether a cable system section is likely to continue to perform properly in service. It should be noted that values of the diagnostic quantity measurements obtained during VLF tests may not correlate with those values obtained during power frequency tests, for example, the dissipation factor is much larger at 0.1 Hz than at power frequency and partial discharge (PD) may differ in terms of magnitude and inception voltage. Diagnostic tests may be nondestructive and are usually performed at lower voltages than withstand tests. However, when the cable system insulation is in an advanced condition of degradation, the diagnostic tests can cause breakdown before the test can be terminated.

Copyright © 2005 IEEE. All rights reserved.

Authorized licensed use limited to: Michael Comerford. Downloaded on June 21,2012 at 12:32:38 UTC from IEEE Xplore. Restrictions apply.

The VLF withstand test methods of cable systems are:

— VLF testing with cosine-rectangular waveform

— VLF testing with sinusoidal waveform

— VLF testing with bipolar rectangular waveform

— VLF testing with alternating regulated positive and negative DC step voltages

Examples of the various waveforms are shown in Annex A.

The VLF diagnostic test methods of cable systems are:

— VLF dissipation factor (tan delta) measurement (VLF-DF)

— VLF differential dissipation factor measurement (VLF-DTD)

— VLF dielectric spectroscopy (VLF-DS)

— VLF loss current harmonics (VLF-LCH)

— VLF leakage current (VLF-LC)

— VLF partial discharge (PD) measurement (VLF-PD)

Field testing techniques frequently employ a combination of diagnostic and withstand test methods. Test methods should be selected based on their ease of operation, operator training requirements, cost/benefit ratio, and the cable system age and condition.

CAUTION

The consequences of a cable system insulation failure during any high-voltage test should be considered prior to undertaking any such test.

The consideration of various VLF testing methods should be based upon the guidelines in Table 1.

Table 1—Criteria considerations for various VLF testing methods

Comparison	Withstand test methods			Diagnostic test methods		
	VLF cosine-rectangular/ bipolar pulse	VLF sinusoidal	VLF DC step pos/neg	VLF-DF/VLF-DTD/VLF-LCH, VLF-LC	VLF PD	VLF DS
Ease of operation	Note 1	Note 1	Note 1	Note 2	Note 2	Note 2

NOTES

Copyright © 2005 IEEE. All rights reserved.

Authorized licensed use limited to: Michael Comerford. Downloaded on June 21,2012 at 12:32:38 UTC from IEEE Xplore. Restrictions apply.

1—Connect HV power supply and apply voltage of specified magnitude for specified time. Straightforward pass/fail criterion.

2—Connect HV power supply and ancillary equipment, if required, to make diagnostic measurements. Care is needed to eliminate unwanted interference or stray signals.

The density and severity of the defects in a cable system influence the effectiveness of any diagnostic method including the VLF test methods (Bach [B1] and [B2]; Baur, Mohaupt, and Schlick, [B5]). As a general rule, the more severe the defects, the lower the AC dielectric strength, and the larger the loss and harmonic loss currents. Severe defects are, for example, large water trees, large contaminants, large voids, or sharp protrusions that can initiate partial discharges and/or electrical trees at test voltages. Less severe defects are small water trees, small contaminants or voids, and less sharp protrusions. These cable conditions can be grouped as shown in Table 2.

Table 2— VLF tests used for different cable conditions

Defect severity/ defect number	Less severe	More severe
Few	• Withstand • Dissipation factor • Differential dissipation factor • Harmonic loss current • Partial discharge • Dielectric spectroscopy (See Note 1)	• Dissipation factor • Differential dissipation factor • harmonic loss current • Partial discharge • Dielectric spectroscopy (See Note 2)
Many	• Dissipation factor • Differential dissipation factor • Harmonic loss current • Partial discharge • Dielectric spectroscopy (See Note 3)	• Withstand • Dissipation factor • Differential dissipation factor • Harmonic loss current • Partial discharge • Dielectric spectroscopy (See Note 4)

NOTES

1—These diagnostic tests may be used to establish baseline values for future test comparisons.

2—In a planned and scheduled outage, withstand tests may be used to “fault” the cable defects without jeopardizing the cable system integrity. These diagnostic tests may be used after the faults are repaired, retested, and returned to service.

3—Repeat tests to establish trends will determine the rate at which such cables are degrading.

4—These cables should be replaced as soon as practicable.

Copyright © 2005 IEEE. All rights reserved.

Authorized licensed use limited to: Michael Comerford. Downloaded on June 21,2012 at 12:32:38 UTC from IEEE Xplore. Restrictions apply.

All types of VLF tests are applicable to jacketed cables with all types of shields. VLF withstand and partial discharge tests can also be applied to extruded cables with bare metallic shields. Other diagnostic tests listed in Table 1 are possible on extruded cables with unjacketed metallic shields if a floating power supply is used (see 5.7.4). The usefulness of various VLF testing methods for selected cable and/or insulation conditions is tabulated in Table 3.

Table 3—Usefulness of VLF testing methods for selected cable and/or insulation conditions

Cable condition	Withstand test methods			Diagnostic test methods		
	VLF cosine-rectangular/ bipolar pulse	VLF sine	VLF DC step pos-neg	VLF-DF VLF-DTD VLF-DS	VLF-PD	VLF-LC VLF=LCH
Cables with metallic-shield corrosion	Acceptable	Acceptable	Acceptable	Poor	Poor	Poor
Extensive water-tree contamination	Not advised; Will likely cause multiple failures	Not Advised; Will likely cause multiple failures	Not Advised; Will likely cause multiple failures	Good	Poor (See Note 1)	Good
Few large defects or few localized electrical trees	Very good	Very good	Very good	Acceptable/ good (see Note 2)	Very good	Acceptable/ good (see Note 2)
Defective splices and terminations	Acceptable/ good (see Note 3)	Acceptable/ good (see Note 3)	Acceptable/ good (see Note 3)	Acceptable (see Note 2)	Good	Acceptable (see Note 2)
Mixed insulation (extruded and/or laminated)	Very good	Very good	Very good	(see Note 4)	Good	(see Note 4)

NOTES

1—PDs are detectable only if one or more electrical trees have initiated from water trees.

2—Supplemental testing is required to distinguish a severe localized defect from general overall deterioration.

3—Laboratory and field tests have shown that damped alternating voltage tests may be more sensitive than VLF tests to detect interface defects, but VLF is more sensitive in detecting cable defects such as water trees (Kobayashi et al. [B15]; Hyvoenon, Oyegoke, and Aro [B13]).

4—As this test technique measures the average of all the insulations under test, supplemental testing is required to measure individual sections of the insulation. If individual sections cannot be measured, the usefulness is poor.

Copyright © 2005 IEEE. All rights reserved.

Authorized licensed use limited to: Michael Comerford. Downloaded on June 21,2012 at 12:32:38 UTC from IEEE Xplore. Restrictions apply.

5.1 General VLF testing

5.1.1 VLF test parameters

During a VLF test an electrical tree at the site of an insulation defect is forced to penetrate the insulation. Inception of an electrical tree and channel growth time are functions of test signal frequency and amplitude. For an electrical tree to completely penetrate the insulation during the test duration, VLF test voltage levels and testing time durations have been established for the two most commonly used test signals, the cosine-rectangular and the sinusoidal wave shapes.

The voltage levels (installation and acceptance) are based on most-used practices world-wide of between 2 Uo and 3 Uo, where Uo is the rated voltage for cables rated between 5 kV and 35 kV. The maintenance test level is about 80% of the Acceptance test level. One can reduce the test voltage another 20% if more test cycles are applied (Bach [B2]; Baur, Mohaupt, and Schlick [B5]; Krefter [B16]).

Table 4 and Table 5 list voltage levels for VLF withstand testing of shielded power cable systems using cosine-rectangular and sinusoidal waveforms (Bach [B2]; Eager et al. [B7]; Krefter [B16]; Moh [B17]. For a sinusoidal waveform the rms is 0.707 of the peak value if the distortion is less than 5%.

Table 4—VLF test voltages for cosine-rectangular waveform (see Note 1)

Cable rating phase to phase	Installation (see Note 2) phase to ground	Acceptance (see Note 2) phase to ground	Maintenance (see Note 3) phase to ground
rms voltage in kV	rms voltage/peak voltage	rms voltage/peak voltage	rms voltage/peak voltage
5	12	14	10
8	16	18	14
15	25	28	22
25	38	44	33
35	55	62	47

NOTES

1—For cosine-rectangular waveform the rms is assumed to be equal to the peak value.

2—The results of field tests on over 15000 XLPE cable circuits tested showed that ~68% of the recorded failures occurred within 12 minutes, ~89% within 30 minutes, ~95% after 45 minutes, and 100% after 60 minutes (Moh [B17]). **The recommended testing time varies between 15 and 60 minutes, although the data in Moh [B17] suggest a testing time of 30 minutes**. The actual testing time and voltage may be defined by the supplier and user and depend on the testing philosophy, cable system, insulation condition, how frequently the test is conducted, and the selected test method. Testing databases or Eager et al. [B7] may be consulted when choosing a preferred testing time. When a VLF test is interrupted, it is recommended that the testing timer be reset to the original time when the VLF test is restarted.

3—For a 0.1 Hz VLF test voltage, the suggested maintenance voltage duration is 15 minutes (Eager et al. [B7]).

Copyright © 2005 IEEE. All rights reserved.

Authorized licensed use limited to: Michael Comerford. Downloaded on June 21,2012 at 12:32:38 UTC from IEEE Xplore. Restrictions apply.

Table 5—VLF test voltage for sinusoidal waveform (see Note 1)

Cable rating phase to phase	Installation (see Note 2) phase to ground	Acceptance (see Note 2) phase to ground	Maintenance (see Note 3) phase to ground
rms voltage in kV	rms or (peak voltage)	rms or (peak voltage)	rms or (peak voltage)
5	9 (13)	10 (14)	7 (10)
8	11 (16)	13 (18)	10 (14)
15	18 (25)	20 (28)	16 (22)
25	27 (38)	31 (44)	23 (33)
35	39 (55)	44 (62)	33 (47)

NOTES

1—For sinusoidal VLF the voltages are given in both rms and peak values. For a sinusoidal waveform the rms is 0.707 of the peak value if the distortion is less than 5%.

2—The results of field tests on over 15000 XLPE cable circuits tested showed that ~68% of the recorded failures occurred within 12 minutes, ~89% within 30 minutes, ~95% after 45 minutes, and 100% after 60 minutes (Moh [B17]). **The recommended testing time varies between 15 and 60 minutes, although the data in Moh** [B17] **suggest a testing time of 30 minutes.** The actual testing time and voltage may be defined by the supplier and user and depend on the testing philosophy, cable system, insulation condition, how frequently the test is conducted, and the selected test method. Testing databases or Eager et al. [B7] may be consulted when choosing a preferred testing time. When a VLF test is interrupted, it is recommended that the testing timer be reset to the original time when the VLF test is restarted.

3—For a 0.1 Hz VLF test voltage, the suggested maintenance voltage duration is 15 minutes (Eager et al. [B7]).

VLF testing methods utilize AC signals at **frequencies in the range of 0.01 Hz to 1 Hz**. The most commonly used, commercially available **VLF test frequency is 0.1 Hz**. Other commercially available frequencies are in the range of 0.0001 Hz to 1 Hz. These frequencies may be useful for diagnosing cable systems where the length of the cable system exceeds the limitations of the test system at 0.1 Hz, although there is evidence that testing below 0.1 Hz may increase the risk of failure in service following the test in Moh [B17]. The internal impedance of the test set can limit the available charging current, preventing the cable under test from reaching the required test voltage. Testing databases; Eager et al. [B7]; or Baur, Mohaupt, and Schlick [B5] may be consulted when selecting an initial test voltage level and testing time duration for a particular cable length.

VLF test voltages with cosine-rectangular and the sinusoidal wave shapes are most commonly used. While other VLF wave shapes are available for testing of cable systems, recommended test voltage levels have not been established.

5.1.2 Testing considerations

— A route map should be available to ensure personnel are familiar with the cables involved, the location of open points, where the cables or joints may be accessible, and the types of cable constructions used.

— The test set used must be sufficiently powerful to supply and dissipate or recover the total cable system charging energy during every cycle.

— In withstand tests, if the cable fails, fault locating may be required.

— In extreme cases in diagnostic testing, when the cable insulation is in an advanced condition of degradation, the diagnostic tests can cause breakdown before the test can be terminated.

— At the conclusion or at an interruption of a VLF test, **the test object should be grounded** immediately.

Copyright © 2005 IEEE. All rights reserved.

Authorized licensed use limited to: Michael Comerford. Downloaded on June 21,2012 at 12:32:38 UTC from IEEE Xplore. Restrictions apply.

5.2 VLF testing with cosine-rectangular/bipolar pulse waveform

5.2.1 Measurement and equipment

In cosine-rectangular and bipolar pulse waveform VLF test sets, a DC test set forms the high voltage source. A DC-to-AC converter changes the DC voltage to the very low frequency AC test signal. The converter consists of a high voltage inductor and a rectifier. Changing the polarity of the cable system being tested every 5 seconds generates a 0.1 Hz bipolar pulse waveform (see Figure A.1). Cables may be tested in preventive maintenance programs or after outages. Identified faults may be repaired or faulted cable sections replaced.

The measurement of the test voltage should be made with an approved measuring system as described in IEC 60060-3. The peak value of the test voltage should be measured with an overall uncertainty of ± 5% and the response time of the measuring system should not be greater than 0.5 second.

5.2.2 Method

The cable or cable system to be tested is connected to the VLF test set and the cosine-rectangular test voltage raised to a value up to that specified in Table 4. To cause a failure, sinusoidal transitions that are in the power frequency range for the 0.1 Hz cosine-rectangular waveform initiate partial discharges at an insulation defect. These partial discharges may develop the defect into a breakdown channel within minutes. When testing with a bipolar pulse waveform similar to that shown in Figure A.4, the test voltages should be the peak voltages in Table 4. The root-mean-square (rms) value of the bipolar waveform will depend on the wave shape and may not be 0.707 of the peak value.

When the cable or cable system passes the VLF voltage test, the test voltage is regulated to zero and cable and test set are discharged and grounded. The cable or cable system can be returned to service. If a cable or cable system fails the test, the test voltage collapses, as is known from DC high potential testing. The VLF test set is turned off to discharge the cable and test set; the cable is then grounded. The cable fault may be located with standard cable fault locating equipment.

5.2.3 Advantages

— The 0.1 Hz cosine-rectangular waveform has polarity changes similar to those at power frequency. Because of the sinusoidal transitions between the positive and negative polarities, traveling waves are not generated, and because of continuous polarity changes, dangerous space charges are less likely to be developed in the insulation.

— Leakage current can be measured.

— Cables may be tested with an AC voltage approximately three times the rated conductor-to-ground voltage with a device comparable in size, weight, and power requirements to a DC test set.

— The VLF test can be used to test cable systems with extruded and laminated dielectric insulation.

— The VLF test with cosine-rectangular/bipolar pulse waveform works best when eliminating a few defects from otherwise good cable insulation.

Copyright © 2005 IEEE. All rights reserved.

Authorized licensed use limited to: Michael Comerford. Downloaded on June 21,2012 at 12:32:38 UTC from IEEE Xplore. Restrictions apply.

5.2.4 Disadvantages

— When testing cables with extensive water tree degradation or partial discharges in the insulation, VLF withstand testing alone may not be conclusive. Additional diagnostic tests that measure the extent of insulation losses will be necessary.

— Cables must be taken out of service for testing.

5.3 VLF testing with sinusoidal waveform

5.3.1 Measurement and equipment

The VLF cable test sets provide true sine wave AC output voltages for testing of cables and capacitive loads (see Figure A.2).

The measurement of the test voltage should be made with an approved measuring system as described in IEC 60060-3. The peak value of the test voltage should be measured with an overall uncertainty of ± 5% and the response time of the measuring system should not be greater than 0.5 second.

5.3.2 Method

The VLF test set is connected to the cable or cable system to be tested and the test voltage raised to a value up to that specified in Table 5. When the cable or cable system passes the VLF voltage test, the test voltage is regulated to zero, the cable or cable system and test set are discharged, and the cable or cable system is grounded.

If a failure occurs during the test, the test voltage collapses, as is known from DC high potential testing. The VLF test set is turned off to discharge the cable and test set. The cable is then grounded. To cause a failure, the local field strength at a defect exceeds the dielectric strength of the insulation, and partial discharges start. The local field strength is a function of the applied test voltage, defect geometry, and space charge. After initiation of partial discharges, the partial discharge channel develops into a breakdown channel within the recommended testing time to cause failure. When a defect has caused breakdown, the latter can then be located with standard fault locating equipment. Cables can be tested in preventive maintenance programs or after outages. Identified faults can be repaired or faulted cable sections replaced. Once a cable passes the VLF withstand test, it may be returned to service.

5.3.3 Advantages

— Because of continuous polarity changes, dangerous space charges are less likely to form in the cable insulation.

— Cables may be tested with an AC voltage approximately three times the conductor-to-ground voltage with a device comparable in size, weight, and power requirements to a DC test set.

— The VLF test can be used to test extruded, laminated, and mixed dielectrics.

— The VLF test with sinusoidal waveform works best when eliminating a few defects from otherwise good cable insulation.

Copyright © 2005 IEEE. All rights reserved.

Authorized licensed use limited to: Michael Comerford. Downloaded on June 21,2012 at 12:32:38 UTC from IEEE Xplore. Restrictions apply.

— VLF test sets with 0.1 Hz dissipation factor, leakage current, loss harmonic current, or dielectric spectroscopy measurement capability for diagnostically identifying cables with low, medium, or highly degraded cable insulation are available.

— Partial discharge-free VLF high voltage generators for diagnostic testing of cables are also available. These tests are described in 5.5 to 5.7.

— Combined VLF withstand, with dissipation factor and partial discharge measurement capabilities, may be used to monitor the dissipation factor and/or partial discharge activity during a 15 to 60 minute withstand test procedure.

5.3.4 Disadvantages

— When testing cables with extensive water tree damage or partial discharges in the insulation, VLF withstand testing may not be conclusive. Additional diagnostic tests that measure the extent of insulation losses will be necessary (see 5.5 and 5.7).

— Partial discharge test data may not be directly comparable with power frequency data.

— Some data from diagnostic tests may not be comparable with power frequency data.

— At very high test voltage levels and frequencies below 0.01 Hz, space charges might be produced in extruded cable insulation.

— Cables must be taken out of service for testing.

5.4 VLF testing with regulated positive and negative DC voltages

5.4.1 Measurement and equipment

In addition to standard 0.1 Hz sinusoidal very low-frequency test sets, which have been in use for quite some time for VLF testing of electrical machines (IEEE 433), several other test set variations are available to meet specific cable system testing requirements and give specific waveforms (see Figure A.3 and Figure A.4).

For cable systems with mixed extruded and laminated dielectric insulation, high-voltage generators with programmable test voltage waveforms are available:

— 0.1 Hz bipolar waves with defined slew rate

— Regulated DC test voltage with positive and negative polarity of varying time duration

— Programmable step voltage tests with positive and negative voltages

— Positive and negative DC test voltage with superimposed AC signals

In order to evaluate the laminated dielectric insulation portion of the system, leakage current measurements are recorded and compared with historic data or figures of merit. Leakage currents of the extruded dielectric insulation portion are assumed to be negligible.

Copyright © 2005 IEEE. All rights reserved.

Authorized licensed use limited to: Michael Comerford. Downloaded on June 21,2012 at 12:32:38 UTC from IEEE Xplore. Restrictions apply.

The measurement of the test voltage should be made with an approved measuring system as described in IEC 60060-3. The peak value of the test voltage should be measured with an overall uncertainty of ± 5% and the response time of the measuring system should not be greater than 0.5 second.

5.4.2 Method

The mixed insulation cable system to be tested is connected to the HV terminal of the VLF test set and voltage is then applied to the insulation. The test voltage is regulated to the test voltage level of 3 U_0 maximum and leakage current measurements are recorded (see also IEEE Std 400). When the cable system passes the leakage current test/withstand test, the test voltage is regulated to zero and the cable system and test set are discharged and grounded.

The AC portion of the VLF test set is now connected to the cable or cable system to be tested. The test voltage is regulated to the test voltage level of 3 U_0 maximum. The recommended testing time is 30 to 60 minutes. When the cable passes the VLF voltage test, the test voltage is regulated to zero and the cable and test set are discharged and grounded.

If a cable system fails the DC or AC test, the test voltage collapses. The test set is turned off to discharge the cable system and test set; the cable fault may then be located with standard cable fault locating equipment. To cause a failure, the local field strength at a cable defect exceeds the dielectric strength of the insulation, and partial discharges start. The local field strength is a function of the applied test voltage, defect geometry, and space charge. After the initiation of partial discharges, an electrical tree may form that can develop into a breakdown channel within minutes. Cable systems can be tested in preventive maintenance programs or after outages. Identified faults may be repaired or faulted cable sections replaced. When a cable system passes the VLF withstand test, it may be returned to service.

5.4.3 Advantages

— This test has merit when new cables with extruded dielectric insulation are spliced into cable systems with mostly laminated insulation.

— Test sets are transportable and power requirements are comparable to standard cable fault locating equipment.

5.4.4 Disadvantages

— In mixed insulation cable systems where service-aged extruded dielectric insulation exposed to moisture is present, the DC portion of the test may shorten the life expectancy of the extruded dielectric.

— Cables must be taken out of service for testing.

5.5 Dissipation factor/differential dissipation factor/leakage current/harmonic loss current tests with VLF sinusoidal waveform

5.5.1 Measurement and equipment

Dissipation factor leakage current and loss current harmonics measurements may be used to monitor aging and deterioration of extruded dielectric cable. A correlation between an increasing 0.1 Hz dissipation factor and a decreasing insulation breakdown voltage level at power frequency has been reported (Bach, Kalkner, Oldehoff [B3]; Hvidsten et al. [B11]). The 0.1 Hz dissipation factor and harmonic loss current are mainly

Copyright © 2005 IEEE. All rights reserved.

Authorized licensed use limited to: Michael Comerford. Downloaded on June 21,2012 at 12:32:38 UTC from IEEE Xplore. Restrictions apply.

determined by degradation due to water trees of the cable insulation and not by water along conducting surfaces. The measurement of the dissipation factor and harmonic loss current with a 0.1 Hz sinusoidal waveform offer comparative assessment of the aging of PE, XLPE, TRXLPE, and EPR type insulation. The test results permit differentiating between new, defective, and highly degraded cable insulation (Baur, Mohaupt, and Schlick [B5]).

The dissipation factor and harmonic loss current with a 0.1 Hz sinusoidal waveform can be used as a diagnostic test. Cables can be tested in preventive maintenance programs and returned to service after testing. The measurements at VLF can be used to justify cable replacement or cable rejuvenation expenditures.

Commercially available test equipment may combine a programmable high-voltage VLF test generator with a computer-aided dissipation factor test set.

When making tan delta/leakage current/harmonic loss current measurements on cable circuits containing accessories, users should be aware that the presence of certain types of accessories could dominate the results obtained. In particular, accessories that utilize stress grading materials with nonlinear voltage characteristics (i.e., high dielectric constant materials) may result in high values of loss current at elevated voltages. Plots of tan delta versus voltage for circuits containing such accessories will be indistinguishable from plots of highly degraded cable. Accessories that geometrically grade the stress will not display this effect.

Users should consult with accessory vendors to obtain tan delta versus voltage characteristic curves or conduct tests on circuits having known quality containing the accessories of interest in order to determine their potential impact.

The measurement of the test voltage should be made with an approved measuring system, as described in IEC 60060-3. The peak value of the test voltage should be measured with an overall uncertainty of ± 5% and the response time of the measuring system should not be greater than 0.5 second.

5.5.2 Method

A VLF generator with dissipation factor/and harmonic loss current measurement capability is connected to the cable under test. Both cable ends must be accessible for the measurement to ensure that surface leakage currents are kept to a minimum or do not flow through the measurement circuit. The dissipation factors (DF) at U_0 and at $2U_0$ are measured and the differential dissipation factor $\Delta DF = DF(2U_0) - DF(U_0)$ is calculated. The absolute VLF-DF and the VLF-DTD values are used as figures of merit or compared to historical data to grade the condition of the cable insulation as good, defective, or highly deteriorated. If there is a significant increase in DF with increasing voltage, there is no need to raise the voltage to $2U_0$, as there is a danger of initiating electrical trees in severely damaged insulation.

It must be understood that, for different insulation, installations, and cable types, DF figures of merit can vary significantly from each other. The test works best when comparing present measurements against established historical figures of merit for a particular cable.

5.5.3 Advantages

— The test is a nondestructive diagnostic test using voltage levels up to two times the conductor-to-ground voltage.

— Cable system insulation condition can be graded as good, defective, and highly deteriorated.

— Cable system insulation can be monitored over time and a cable system history developed.

— Cable replacement and cable rejuvenation priorities and expenditures can be planned.

Copyright © 2005 IEEE. All rights reserved.

Authorized licensed use limited to: Michael Comerford. Downloaded on June 21,2012 at 12:32:38 UTC from IEEE Xplore. Restrictions apply.

— Test sets are transportable and power requirements are comparable to standard cable fault locating equipment.

— Combined VLF withstand, with dissipation factor and partial discharge measurement capabilities, may be used to monitor the dissipation factor and/or partial discharge activity during 15 minute to 60 minute withstand test procedures.

5.5.4 Disadvantages

— Historical comparative cable system data should be available for comparison for the test to be most useful.

— The test cannot be used on cable with bare neutrals or cables with semiconducting jackets unless the power supply is allowed to float and is connected to ground through diodes.

— Periodic measurements and a database are required to accurately assess the condition of cable systems.

— The technique measures the average condition of the insulation.

— Cable circuits with healthy cables that have accessories that utilize stress grading materials with nonlinear voltage characteristics may exhibit characteristics of highly degraded cables.

— Some data from diagnostic tests may not be comparable with power frequency data.

— Cables must be taken out of service for testing.

5.6 PD test with VLF sinusoidal waveform

NOTE—This section describes the PD test with VLF sinusoidal waveform only. PD testing is covered in detail in IEEE P400.3 draft 8. VLF-PD tests should be performed according to IEEE P400.3 draft 8.

5.6.1 Measurement and equipment

PD measurements to monitor aging and degradation of paper-insulated cables have been reported (Baur, Mohaupt and Schlick [B5]; Hetzel and MacKinlay [B10]). The described method is based on the application of a pure, partial discharge free, sinusoidal 0.1 Hz wave to the cable system. The applied voltage of up to two times the rms system line-to-ground voltage may generate partial discharges at insulation defect sites. A traveling wave method may be used to measure the magnitude of PD, locate, and record the partial discharges from the various defect locations in the cable, splices, or terminations. VLF-PD measurements are a diagnostic tool used to detect, in a nondestructive manner, the location and severity of an insulation defect. There may be differences in the PD characteristics measured at VLF and power frequency.

The measurement of the test voltage should be made with an approved measuring system, as described in IEC 60060-3. The peak value of the test voltage should be measured with an overall uncertainty of ± 5% and the response time of the measuring system should not be greater than 0.5 second.

It is recommended that test procedures be followed according to IEC 60885-3 where possible, to aid in consistency of results.

Copyright © 2005 IEEE. All rights reserved.

Authorized licensed use limited to: Michael Comerford. Downloaded on June 21,2012 at 12:32:38 UTC from IEEE Xplore. Restrictions apply.

5.6.2 Method

A transportable, partial discharge free VLF sine wave generator is connected to an isolated cable system. Usually the VLF-PD is used as a monitoring tool during a withstand test. A more nondestructive test voltage level, typically of one to two U_0, is applied to the test object for less than 10 minutes. After the initiation of partial discharges (partial discharge inception voltage PDIV), an electrical tree may form that can develop into a breakdown channel within minutes. Every partial discharge generated during the testing time is recorded in a computer-based system by magnitude and location of its origin. The information of all recorded discharges is presented in a "PD Map." The total number, the phase, and the magnitude of the partial discharges displayed along the cable system route diagram may provide information as to the severity and location of the various defects. Recommendations about repair or replacement of cable system sites, cable sections, or complete cable systems can be made. However, as with all PD diagnostic test methods, it should be noted that there is insufficient data to allow an accurate interpretation of PD results from either extruded or PILC cables. For example, some sites with high PD activity have not failed and there have been some failures at sites with little or no PD activity. Caution is advised in the interpretation of PD data. The test is diagnostic; after the test the cable system can be returned to service until such time when repairs or replacements will be made.

5.6.3 Advantages

— Cables are tested with an AC VLF voltage up to the partial discharge inception voltage, VLF-PDIV, or during a withstand test.

— The location of PD activity can be detected and measured.

— Cable system insulation condition can be graded as good, defective, or highly deteriorated when the measurement data are compared against historically established cable system PD data.

— Cable system repairs and/or replacements can be made when schedules permit.

— Test sets are transportable and power requirements are comparable to standard cable fault locating equipment.

— Combined VLF withstand and partial discharge test systems may be used to monitor the dissipation factor and/or partial discharge activity during a 15 to 60 minute withstand test procedure.

5.6.4 Disadvantages

— The test becomes more useful after historical comparative cable system data have been accumulated.

— The PD detection test with VLF (0.1 Hz) sinusoidal waveform may be of limited use when evaluating water tree contaminated insulation.

— PD data may not be comparable with power frequency data.

— Cables must be taken out of service for testing.

Copyright © 2005 IEEE. All rights reserved.

Authorized licensed use limited to: Michael Comerford. Downloaded on June 21,2012 at 12:32:38 UTC from IEEE Xplore. Restrictions apply.

5.7 Dielectric spectroscopy with VLF sinusoidal waveform

5.7.1 Measurement and equipment

Measurements over a range of frequencies and voltages, i.e., dielectric spectroscopy, provide much information about the status of the insulation. A programmable high-voltage VLF generator and an active bridge have been used to measure loss currents in medium-voltage cables at high voltages and frequencies from 0.1 mHz to 1 kHz (Hvidsten et al. [B12]).

The loss currents at frequencies below 1 Hz are sensitive to degradation due to water trees in extruded XLPE cables. The loss currents also offer a comparative assessment of the aging of paper/oil cables (Werelius [B20]). No work has been reported on EPR cables.

The test is a diagnostic test that uses rms voltages up to 14 kV and can be used as a preventive maintenance test where cables can be returned to service after testing.

When making dielectric spectroscopy measurements on cable circuits containing accessories, users should be aware that the presence of certain types of accessories could dominate the results obtained. In particular, accessories that utilize stress grading materials with nonlinear voltage characteristics (i.e., high dielectric constant materials) may result in high values of loss current at elevated voltages. Plots of tan delta versus voltage for circuits containing such accessories will be indistinguishable from plots of highly degraded cable. Accessories that geometrically grade the stress will not display this effect.

Users should consult with accessory vendors to obtain tan delta versus voltage characteristic curves or conduct tests on circuits having known quality containing the accessories of interest in order to determine their potential impact.

The measurement of the test voltage should be made with an approved measuring system, as described in IEC 60060-3. The peak value of the test voltage should be measured with an overall uncertainty of ± 5% and the response time of the measuring system should not be greater than 0.5 second.

5.7.2 Method

A programmable high-voltage generator with a variable frequency between 0.0001 Hz and 1 Hz is connected to the cable system to be tested. Once the test ranges of frequencies and voltages, usually up to 2 U_0, have been defined, the active bridge automatically measures the complex dielectric constant at each voltage and frequency. Typical measurement times take less than 15 minutes.

The voltage across and the loss and capacitive current through the cable under test are measured accurately with a voltage divider and an electrometer. The capacitive current can be balanced out using the active arm of the bridge. This allows small changes in cable characteristics to be measured. The increased sensitivity enables degradation to be detected at operating conductor-to-ground voltage.

5.7.3 Advantages

— The test is a diagnostic test using voltage levels up to the conductor-to-ground operating voltage.

— When loss and capacitive currents increase together, the dissipation factor, which is the ratio of these currents, may be less sensitive in detecting cable degradation. Therefore, both the loss and capacitive currents can be plotted separately as a function of voltage and frequency.

— Periodic measurements allow the condition of the cable system to be monitored with time and a cable history to be developed.

Copyright © 2005 IEEE. All rights reserved.

Authorized licensed use limited to: Michael Comerford. Downloaded on June 21,2012 at 12:32:38 UTC from IEEE Xplore. Restrictions apply.

— Cable system insulation condition can be graded as good, defective, or highly deteriorated when the measurement data are compared against historically established cable system VLF-DS data.

— Cable replacement and cable rejuvenation priorities and expenditures can be planned.

— Test sets are transportable and power requirements are comparable to standard cable fault locating equipment.

5.7.4 Disadvantages

— At present, the maximum commercially available test voltages at a particular VLF frequency and the maximum cable capacitance that can be tested limits the application of dielectric spectroscopy to the testing of medium-voltage cable systems.

— The test becomes useful after historical comparative cable system data have been accumulated.

— Periodic measurements and a database are required to accurately assess the condition of cable systems.

— The technique measures the average condition of the insulation.

— Cable circuits with healthy cables that have accessories that utilize stress grading materials with nonlinear voltage characteristics, may exhibit characteristics of highly degraded cables.

— The test cannot be used on cable systems with bare neutrals or cables with semiconducting jackets unless the power supply is allowed to float and is connected to ground through diodes.

— At very high test voltage levels and frequencies below 0.01 Hz, space charges might be produced in extruded cable insulation.

— Cables must be taken out of service for testing.

6. Conclusions

VLF testing uses frequencies of the applied voltage in the range of 0.01 Hz to 1 Hz. This guide addresses the use of VLF withstand and diagnostic field testing of installed shielded power cable systems.

The suitability, practicality, and effectiveness of a withstand or diagnostic testing method for shielded power cable systems with extruded dielectric insulation will develop over time and is based on several criteria:

a) What voltage level is required to detect a defect?

b) Is it possible to miss a defect that may fault when the cable is returned to service?

c) Does the test aggravate the defect so that cable life is shortened when the cable is returned to service after testing?

d) What is the cost of testing compared with the quantitative benefits?

VLF testing techniques, along with other test techniques, are continuing to improve and develop. Meaningful interpretation of the test results will require development of a database to better define acceptance criteria.

Copyright © 2005 IEEE. All rights reserved.

Authorized licensed use limited to: Michael Comerford. Downloaded on June 21,2012 at 12:32:38 UTC from IEEE Xplore. Restrictions apply.

Annex A

(normative)

Wave shapes of VLF testing voltages

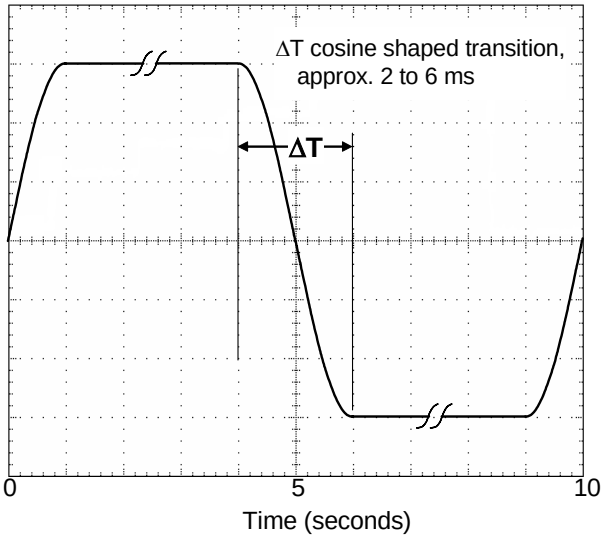

Figure A.1—Nominal cosine-rectangular waveform. A feature of the waveform is the emulation of the change in polarity with time as found from power frequency up to 250 Hz

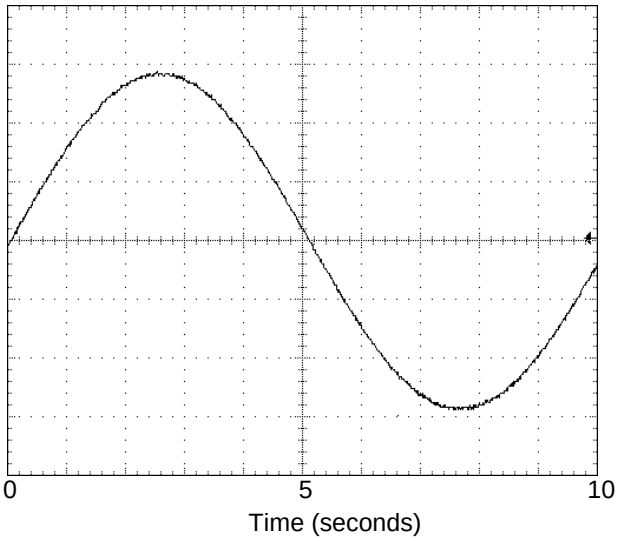

Figure A.2—VLF sinusoidal waveform f = 0.1 Hz

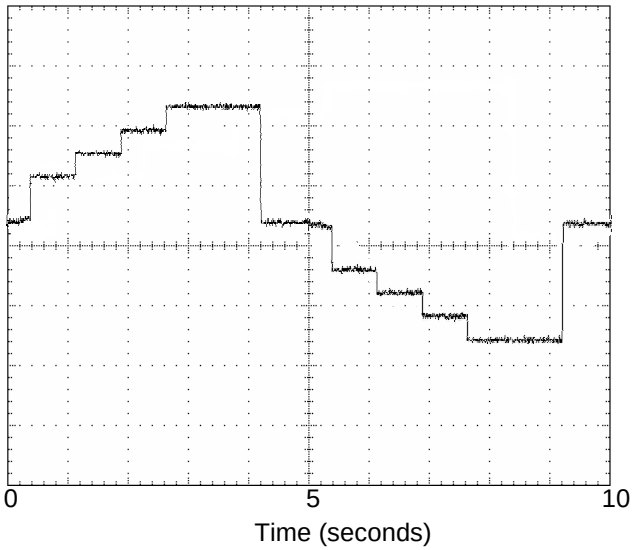

Figure A.3—DC step VLF waveform, programmable in both polarities

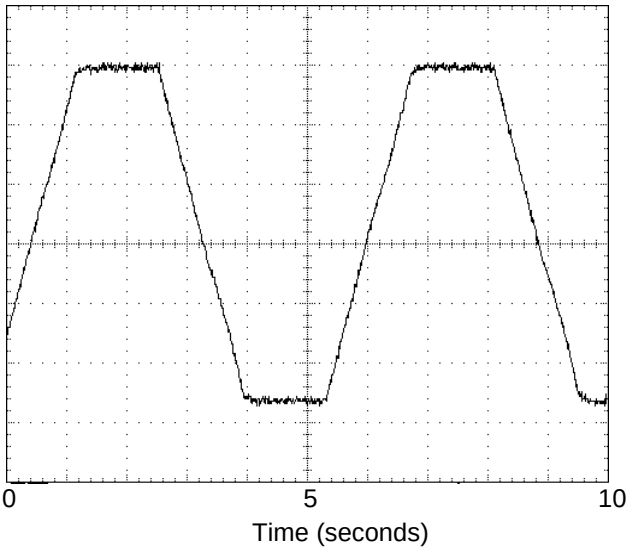

Figure A.4—Bipolar rectangular VLF waveform, f = 0.1 Hz

Copyright © 2005 IEEE. All rights reserved.

Authorized licensed use limited to: Michael Comerford. Downloaded on June 21,2012 at 12:32:38 UTC from IEEE Xplore. Restrictions apply.

Annex B

(informative)

Bibliography

[B1] Bach, R., "Quervergleich Verschiedener Spannungsarten zur Pruefung von Mittelspannungs-kabelanlagen," Technical University of Berlin, *Annual Report of Research Activities*, 1989.

[B2] Bach, R., "Testing and Diagnostic Techniques for Assessing Medium Voltage Service-aged Cables and New Cable Techniques for Avoiding Cable Faults in Future," CIRED Conference, Brussels, 1995, Paper No. 3.05.1.

[B3] Bach, R., Kalkner, W., Oldehoff, D., "Verlustfaktormessung bei 0.1 Hz an betriebsgealterten PE/VPE Kabelanlagen," Elektrizitäswirtschaft, Jg. 92, Heft 17/18, pp. 1076–1080, 1993.

[B4] Bahder, G., Katz, C., Eager, G. S., Leber, E., Chalmers, S. M., Jones, W. H., and Mangrum, W. H., "Life Expectancy of Crosslinked Polyethylene Insulated Cables Rated 15 to 35 kV," *IEEE Transactions PES*, vol. 100, pp. 1581–1590, April 1981.

[B5] Baur, M., Mohaupt, P., and Schlick, T., "New Results in Medium Voltage Cable Assessment Using Very Low Frequency with Partial Discharge and Dissipation Factor Measurement," CIRED 17th International Conference on Electricity Distribution, Barcelona, May 12–15, 2003.

[B6] Eager, G. S., Jr., Fryszczyn, B., Katz, C., ElBadaly, H. A., and Jean, A. R., "Effect of D.C. Testing Water Tree Deteriorated Cable and a Preliminary Evaluation of V.L.F. as Alternative," *IEEE Transactions on Power Delivery*, vol. 7, no. 3, pp. 1582–1591, July 1992.

[B7] Eager, G. S., Katz, C., Fryszczyn, B., Densley, J., and Bernstein, B. S., "High Voltage VLF Testing of Power Cables," *IEEE Transactions on Power Delivery*, vol. 12 no. 2, pp. 565–670, 1997.

[B8] Gnerlich, H. R., "Field Testing of HV Power Cables: Understanding VLF Testing," *IEEE Electrical Insulation Magazine*, vol. 11, no. 5, pp. 13–16, Sep./Oct. 1995.

[B9] Groenefeld, P., von Olshausen, R., and Selle, F., "Fehlererkennung und Isolationsgefaehrdung bei der Pruefung Water-tree haltiger VPE-Kabel mit Spannungen unterschiedlicher Form," Elektrizitaetswirtschaft, Jg. 84, H. 13, pp. 501–505, 1985.

[B10] Hetzel, E., MacKinlay, R. R., "Diagnostic Field Testing of Paper Insulated Lead Covered MV Cables," JICABLE, 4th International Conference on Insulated Power Cables, Versailles, 1995.

[B11] Hvidsten, S., Faremo, H., Benjaminsen, J. T., and Ildstad, E., "Condition Assessment of Water Treed Service Aged XLPE Cables by Dielectric Response Measurements," Paper 21–201 presented at CIGRE 8 pp., 2000.

Copyright © 2005 IEEE. All rights reserved.

Authorized licensed use limited to: Michael Comerford. Downloaded on June 21,2012 at 12:32:38 UTC from IEEE Xplore. Restrictions apply.

[B12] Hvidsten, S., Ildstad, E., Holmgren, B., and Werelius, P., "Correlation between AC Breakdown Strength and Low Frequency Dielectric Loss of Water Tree Aged XLPE Cables," *IEEE Transactions on Power Delivery*, vol. 13, no. 1, pp. 40–45, 1998.

[B13] Hyvoenon, P., Oyegoke, B., and Aro, M., "Diagnostics and testing of high voltage cable systems," Technical report TKK-SJT- 63, High Voltage Institute, Helsinki University of Technology, 19 pp. (available at http://www.hut.fi/Units/HVI/).

[B14] IEEE 100, *The Authoritative Dictionary of IEEE Standards Terms*, Seventh Edition, New York, Institute of Electrical and Electronic Engineers, Inc.

[B15] Kobayashi, S., Uchida, K., Kawashima, T., Hirotsu, K., Inoue, H., Tanaka, H., and Sakuma, S., "Study on detection for the defects of XLPE cable links," Proceedings of 1995 Jicable Conference, Paper A.6.3, pp. 151–157.

[B16] Krefter, K-H, "Prüfung zur Beurteilung von Kabelanlagen in Mittelspannungsnetzen," page 127 cont., VWEW-Verlag, Frankfurt am Main, 1991.

[B17] Moh, S. C., "Very low frequency testing—Its effectiveness in detecting hidden defects in cables," 2003 CIRED (17th International Conference on Electricity Distribution), Barcelona, Paper 84, May 12–15, 2003.

[B18] Srinivas, N. H. and Bernstein, B. S., "Effect of D.C. Testing on Aged XLPE Insulated Cables with Splices," JICABLE 91, Paris, France, Paper B.3.1, June 1991.

[B19] Steennis, E. F., Boone, W., and Montfoort, A., "Water Treeing in Service-aged Cables, Experience and Evaluation Procedure," *IEEE Transactions*, PES-5, no. 1, pp. 40–46, Jan. 1990.

[B20] Werelius, P., "Power Cable Diagnostics by Dielectric Spectroscopy," Paper presented at Panel on Diagnostic Measurement Techniques for Power Cables at the 1999 IEEE/PES Transmission and Distribution Conference, New Orleans, April 11–16, 1999.

Copyright © 2005 IEEE. All rights reserved.

Authorized licensed use limited to: Michael Comerford. Downloaded on June 21,2012 at 12:32:38 UTC from IEEE Xplore. Restrictions apply.

REFERENCE
INTERNAL INSPECTION

Created by: M. Rideout
Revised by: B. Chubbs
Reviewed by: G. Samms
Approved by: G. Samms

MSR017-1: Internal Inspection

When inspecting and maintaining power transformers, personnel should be constantly aware of what should and should not be done to protect the quality and reliability of the transformer.

New transformers are thoroughly dried and impregnated during manufacture and units that have been in satisfactory service are also dry. Extreme care must be taken to avoid the entry of moisture or dampness into the tank. Even a very minute amount of moisture in the insulation may cause an insulation breakdown. A careful record should be kept of the duration and time of exposure of the windings to the atmosphere.

All new transformers will have an internal inspection at the time of installation. After a transformer has been in service for some time, usually an internal inspection will be made only when there is suspicion of interior trouble or in the event that oil would have to be removed for moving the transformer or changing voltages. In the event that a transformer is opened for inspection, the same procedures and precautions are to be followed as for the initial installation.

The following guidelines should be followed in making the internal inspection:

A. **Precautions**

1. Normal good safety practices, including procedures for confined spaces, must be followed during the inspection and installation. In addition, there are procedures that are peculiar to transformers that should be followed for the protection of workmen and of the transformer.

2. Care should be taken to avoid slipping or falling off while working on top of the transformer.

3. Ensure that the transformer tank is grounded. All oil handling equipment and the vacuum pump must also be grounded. This will reduce the possibility of static discharge.

4. Personnel should not enter the transformer tank unless the air in the tank has been checked with the oxygen tester and found to be safe for breathing. Whenever anyone is inside the tank, a man should be stationed at the manhole outside the tank.

5. Lights, if used, must be explosion proof or our standard handheld battery lamp.

6. **Caution:** Never apply voltage (e.g. megger tests, etc.) to a transformer when it is under vacuum. The reason for this is that the spark-over level is very low under vacuum conditions and, at the vacuum levels normally reached in the field, it is very likely the megger readings will be zero; in other words, creeping or flashing to ground will occur.

B. **Avoiding Transformer Damage**

1. Extreme care must be taken to protect the transformer insulation from damage and to prevent materials from being introduced into the tank during inspection and assembly. The transformer should be opened only in dry weather. In the event of sudden weather changes such as threatening rain, provision must be made for closing the tank quickly.

REFERENCE
POWER TRANSFORMERS

2. While the transformer is open, all personnel who are to work in or on top of the transformer must empty all their pockets, remove watches, jewelry, and any other possible loose objects.

3. Persons entering the tank must not have loose dirt particles on their clothing. Special shoe covers or rags wrapped around shoes must be worn by anyone entering the tank.

4. All tools must be accounted for. Tools should have lines attached and be tied to a stationary location outside the tank. Socket wrenches or adjustable wrenches should not be used inside the tank because of the possibility of parts becoming separated from the wrenches and falling into the windings.

C. **Preparation for Internal Inspection**

1. Look at the internal parts and see if there are any loose or damaged parts.

2. Check for debris. Tools, rags, matches, etc., have been found in new transformers during the first inspection upon arrival from the factory. Such things may be found by making a through inspection down under the coils, underneath ledges and in out-of-the-way places. Pieces of porcelain have also been found. These pieces were not all removed after a bushing had been broken at the factory.

3. Make a core ground test if the lead is available at the top of the manhole. A 500-volt megger should be used and it should read greater than 100 mega-ohms. Values less than this should be reported to the Substation Asset Management Group immediately.

4. Enter the tank. Caution must be taken not to disturb cables or step on tapchanger drive shafts or any other parts that may be easily damaged. If cables are disturbed, a failure could result from reduced clearances or damaged crepe paper connections.

   While inside the tank, examine as follows:

   a) **General Condition** – Take a good look around and assess the condition of the core and coils and all components. Check that the lower diaphragm, if one exists, at the bottom of the explosion vent is intact. If there is an oil level gauge on the side of the main tank, operate the float while someone outside observes that the indicator on the gauge is moving as it should. Check for spray nozzles where they are required.

   b) **Leads** – Check for broken lead supports. Make sure that leads wee anchored properly for shipment. Leads that are improperly anchored can do significant damage to other parts. Check for frayed cable insulation. Check that CT leads and any control wiring is properly in place and in good condition. Check tapchanger leads thoroughly.

   c) **Bolted Electrical and Mechanical Joints** – Check all bolted connections to make certain they are tight and that there are no missing nuts and washers.

   d) **Core** – Check if any core members have shifted. This includes core supports, as well as laminations. Pay particular attention to the corners of the core.

   e) **Off-Load Tapchanger** – Check that the tapchanger mounts have not been damaged. Inspect the operating mechanism to see that it is in good condition. Check contact alignment. Check for broken fiber rods, bolts and nuts.

   f) **Terminal Board Structure** – Check for any sign of carbon or tracking. Check hardware for tightness. If dual voltage, check that it is on the correct setting.

REFERENCE
POWER TRANSFORMERS

g) **Temporary Shipping Braces** – These parts, when used, are usually brightly colored to indicate removal before final installation. Check for shifting of these parts.

h) **Internal CTs and PTs or Auxiliary Transformers** – Check for tightness of mounting bolts and internal control wiring.

i) **Coils and Insulation** – Check for any misalignment of spacers, indicating coil movement. Inspect the leads where they come out of the coils, if they can be seen. Check blocking to see if there are any loose parts. Look for any looseness of coils. Check for any extraneous parts that do not belong to the coils.

j) **Bottom of Tank** – Check for loose parts and debris.

k) **Tank Cracks** – Check all welded areas, especially the inside corners of the tank, for possible cracks.

l) **Moisture** – Look for signs of moisture such as free water or rust. If moisture enters the transformer on transit, it can sometimes be detected by condensation on the inside of the cover or in radiator wells.

While the above guidelines may not cover all details for all types of power transformers, they are intended to assist maintenance personnel in doing a good internal inspection.

If any abnormal conditions are found during the internal inspection, the Substation Asset Management Group should be informed immediately. If everything is found to be in good order, the transformer should be sealed after a check has been made to ensure that all tools or foreign material are removed from the tank.

Operations Manual
Subject: POWER TRANSFORMER LOADING GUIDELINE

NEWFOUNDLAND POWER

Bulletin Number	OPR190.07
Date Issued	1992 06 24
Revision Date	1992 06 24
Page 1 of 6	

Prepared by	Approved by	Distribution
B. P. VINCENT		

POWER TRANSFORMER LOADING GUIDELINE

This guideline is based on Ansi Loading Guide C57.92-1981, for transformers built in accordance with ANSI standards C57.12.10-1976 and C57.12.30-1977, which form part of Newfoundland Power's Transformer Specification.

LOADING PHILOSOPHY

The load which a transformer can carry is a function of several limitations, among these are: oil expansion, pressure in sealed units, ambient temperature, and annealing properties of transformer leads. However, the primary factor which limits the loading most severely is the loss of insulation life as a result of high winding temperatures.

During the life of a transformer a certain percentage of insulation life is normally lost on a daily basis. However operating the same transformer at temperatures in excess of the design limits will result in accelerated aging of the insulation and may result in immediate failure of the transformer for extremely high operating temperatures.

Transformers built for Newfoundland Power are designed to supply rated output in an average ambient temperature of 30 C, which corresponds to a maximum hot spot winding temperature of 110 C, for a 65 C rise transformer. The winding temperature is defined as the sum of the ambient temperature, average winding temperature rise over ambient and the maximum hot spot rise over winding temperature (typically 15 C). This translates to a transformer life of approximately 7.4 or 22.5 years for continuous operation at maximum hot spot winding temperatures of 110 C and 100 C respectively.In reality the transformer may last longer then this due to daily and seasonal load fluctuations which result in average loads below the transformer's nameplate rating.

Bulletin Number	OPR190.07
Revision Date	1992 06 24
Page 2 of 6	

Subject: POWER TRANSFORMER LOADING GUIDELINE

We can take advantage of the fact that thermal aging is a cumulative effect of temperature and time. We can operate the transformer at loads above it's nameplate rating which results in temperatures in excess of its design limits as long as the average load during a twenty four (24) hour period does not exceed the transformer's rating. We can also take advantage of the thermal lag properties of the transformer. We can overload the transformer for periods of time until the transformer warms up to the maximum hot spot temperature after which the transformer must be returned to its nameplate rating to reduce it's operating temperature and to avoid accelerated ageing.

Transformer overload and cold load pickup practices are outlined below. These practises are based on the standards and the philosophy outlined above. Allowable overloads given are based on the maximum nameplate rating of the transformer.

DESIGN SPECIFICATION

Overload protection schemes shall be designed to allow for a setting between 125% and 130% of the transformer nameplate rating. Existing protection schemes with settings below 118% shall be changed out to allow for increased overload where the projected load approaches 80% of the maximum nameplate rating of the transformer. These relays will normally be changed out as part of future work at the station. If deemed necessary these relays may be changed out earlier.

NORMAL OVERLOAD SETTINGS

Transformer overload relays shall normally be set to allow for loading of the transformer to 130% of its maximum nameplate rating. Loading of the transformer during the summer months shall be limited to 105% of the transformers maximum nameplate rating. Tap settings shall be selected as close as possible to the 130% setting without exceeding it.

SHORT TERM OVERLOADS AT AMBIENT BELOW 0 C

During cold load pickup or during emergency conditions a transformer may be loaded in excess of its nameplate rating to such an extent that a portion of its life is sacrificed in return for increased capacity to pick up the additional load. This loss of life is shown in Fig 1 and Fig 2. Fig 2 shows in more detail the initial 6 hours after energization.

Bulletin Number	OPR190.07
Revision Date	1992 06 24
Page 3 of 6	

Subject: POWER TRANSFORMER LOADING GUIDELINE

ALLOWABLE SETTINGS FOR SHORT TERM OVERLOADS

Load Readings + Temperature Readings

In all instances where the overload is greater then 130% of the maximum nameplate rating, the load on the transformer shall be recorded at 15 minute intervals, until the load relay settings can be returned to normal. All load readings shall be taken with clip on ammeters [1].This information should then be forwarded to Power Systems to assess possible transformer damage.

Settings Below 160 % of Maximum Nameplate Rating

The Regional Manager in conjunction with his staff shall determine the allowable overload for each occurrence of temporary overload taking into consideration the anticipated duration of the temporary overload, the percentage overload and resultant loss of life. The protection group shall distribute a list of maximum relay settings to be used above the normal settings but below the 160% limit.

Settings Above 160% of Maximum Nameplate Rating

For settings above 160 % approval from Head Office On-Call personnel must be received.

Maximum Transformer Loading

Under no circumstances shall the transformer load result in an absolute winding temperature in excess of 180 C. The 180 C absolute winding temperature limit is a function of load and its duration and is indicated on the attached graphs as the failure zone. Operation of the transformer in the failure zone will most likely result in immediate failure of the transformer.

---

[1] The scada system and thermal demand meters saturate at loads above 125% of the transformer's rating.

Bulletin Number	OPR190.07
Revision Date	1992 06 24
Page 4 of 6	

Subject: POWER TRANSFORMER LOADING GUIDELINE

The transformer load and its duration only shall be used as an indication of absolute winding temperature. The winding temperature gauge shall not be used as an accurate measure of the winding temperature. The winding temperature gauge only measures the average winding temperature rise over ambient and not the absolute winding temperature.

INTERPRETATION OF LOSS OF LIFE CURVES

Several points must be taken into consideration when interpreting the cold load pickup curves.

(1) The values given regarding loss of transformer life are based on controlled conditions at 0 C. Operation of the transformer below this temperature does not significantly increase the loading capability of the transformer. At temperatures below 0 C the cooling oil becomes viscous which reduces its cooling ability.

(2) The Loss of Life Curves assume that the transformer was loaded to peak prior to the short term overload.

(3) The Loss Of Life Curves are based on an averaging of characteristics of transformers presently in service. The following characteristics were used in developing the Loss Of Life Curves:

   (a) Ratio Of Load Losses To No-Load Losses 9.5

   (b) Average Oil Temperature Rise At Full Load 45 C

   (c) Average Winding Temperature Rise At Full Load 65 C

   (d) Thermal Capacity Of Transformer 5000 Wh/ C

(4) ANSI's loading guide suggests limiting transformer overloads to 200% of nameplate rating. Operation above this limit will result in severe stresses on the transformer and may result in annealing of the copper winding.

(5) Under no circumstances shall the transformer load and duration of the load result in operation of the transformer in the failure zone. Operation of the transformer in the failure zone will most likely result in immediate failure of the transformer.

Bulletin Number	OPR190.07
Revision Date	1992 06 24
Page 5 of 6	

Subject: POWER TRANSFORMER LOADING GUIDELINE

Loss Of Xfmr Life For Short Term Overloads At Ambients Below 0°C

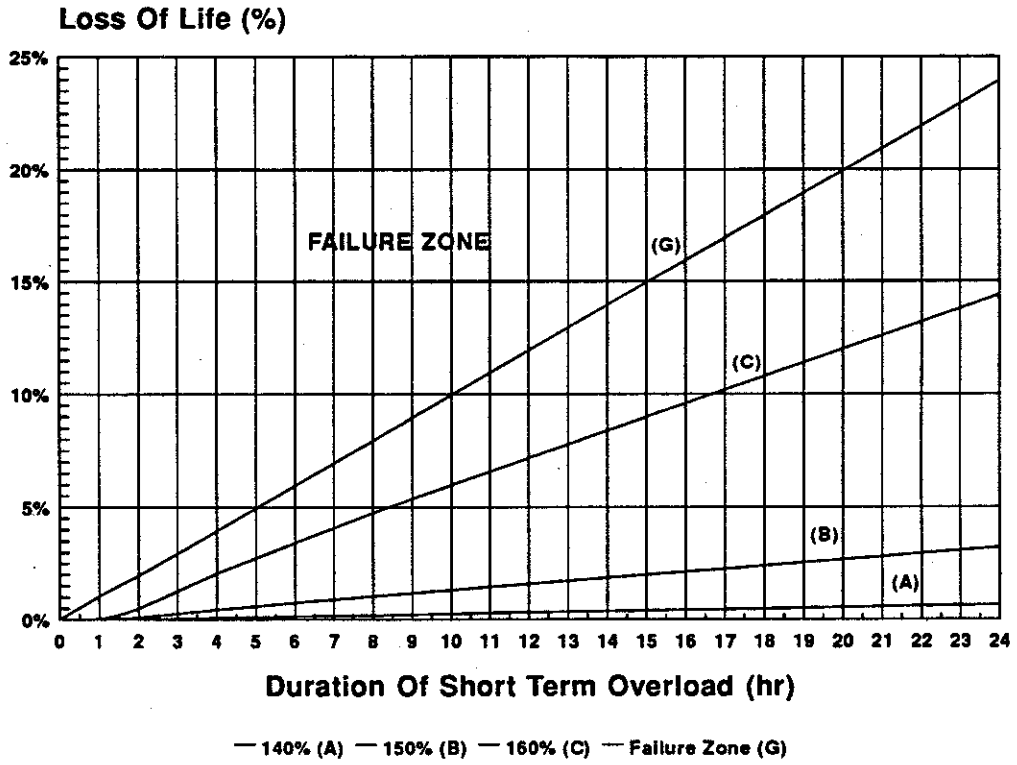

FIG 1

Bulletin Number	OPR190.07
Revision Date	1992 06 24
Page 6 of 6	

Subject: POWER TRANSFORMER LOADING GUIDELINE

Loss Of Xfmr Life For Short Term Overloads at Ambients Below 0°C

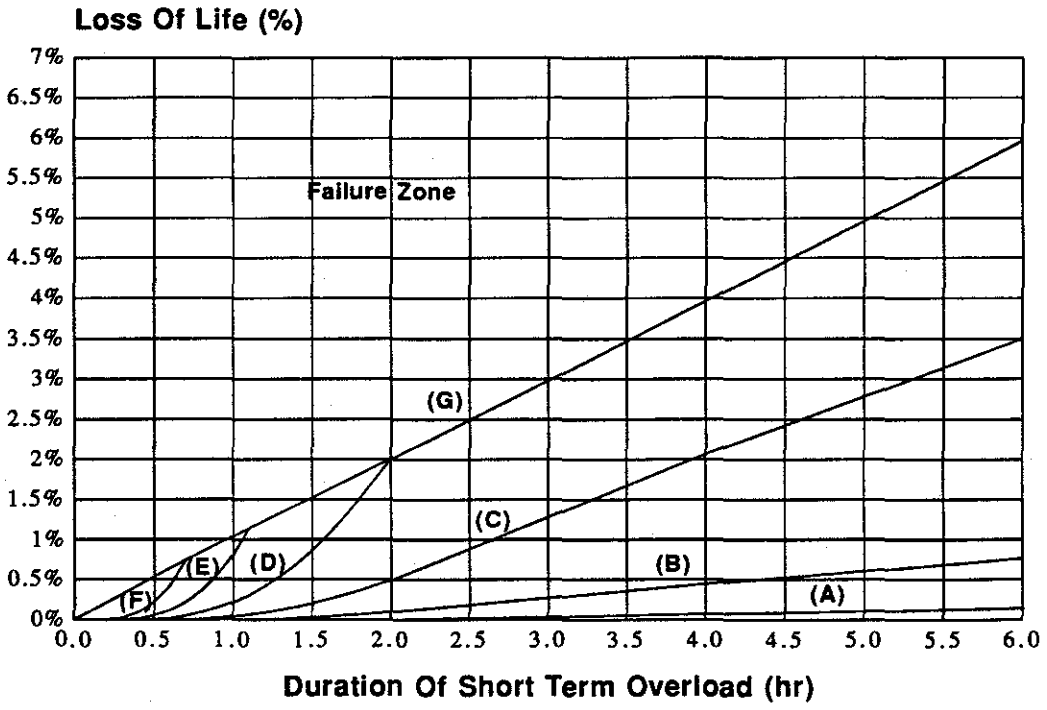

— 140% (A) — 150% (B) — 160% (C) — 170% (D) — 180% (E) — 190% (F) — Failure Zone (G)

FIG 2

NEWFOUNDLAND POWER
A FORTIS COMPANY

Maintenance Standard Number: MSR018-1
Effective Date: 2009-07-17
Superseding Date: 1982-11-15
Page 1 of 1

REFERENCE
WESTINGHOUSE ES-105 RECLOSER TRIP LATCH ADJUSTING INSTRUCTIONS

Created by: M. Rideout
Revised by: B. Chubbs
Reviewed by: G. Samms
Approved by: G. Samms

MSR018-1: Westinghouse ES-105 Recloser Trip Latch Adjusting Instructions

A problem with Westinghouse ES-105 reclosers, resulting in failure to trip when AC was removed from the PT during a line fault, was traced to trip latch adjustment.

The trip latch wipe should be adjusted as per the following instructions. Refer to the drawing for assistance.

1. With mechanism open and closing springs charged, apply downward pressure on the screw end of the trip latch until the trip latch just releases. Then measure the distance "A" between the body of the trip latch and the smooth body part of the trip stop bolt. This should be 7.9375mm (5/16 in.).

   Next, unscrew the latch, check switch adjusting screw until the bottom of the screw is flush with the top of its nut, being careful to leave the slot in the screw aligned as shown in the drawing. Distance "A" should be re-measured with the mechanism open and the closing springs charged and should be 14.2875mm (9/16 in.).

2. Distance "B" should be 3.1750mm (1/8 in.) when the trip lever is in its reset position. Move the mounting position of the trip coil if necessary to obtain the clearances as indicated in the drawing.

3. Close the recloser and then remove the 240 volt supply to the capacitor trip device by turning off the main breaker. Measure the maximum time that the recloser can be tripped on an overcurrent relay time dial after AC is removed. This tripping time should be in excess of 30 seconds.

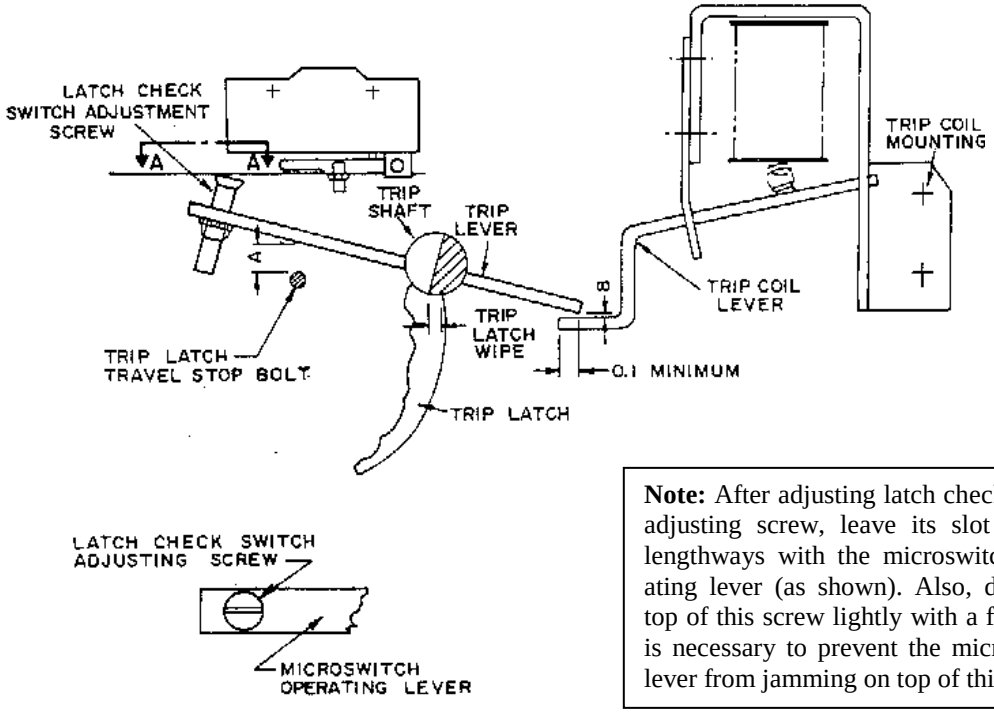

Note: After adjusting latch check switch adjusting screw, leave its slot aligned lengthways with the microswitch operating lever (as shown). Also, dress the top of this screw lightly with a file. This is necessary to prevent the microswitch lever from jamming on top of this screw.

REFERENCE
NU-LEC RECLOSER BATTERY CARE

Created by: M. Rideout
Revised by: B. Chubbs
Reviewed by: G. Samms
Approved by: G. Samms

MSR018-2: Nu-Lec Recloser Battery Care

The battery is predicted to provide good performance for the recommended five-year service period, based on the manufacturer's data. In some environments, an exceptionally high control cubicle temperature can mean a shorter battery replacement period.

Once in service, batteries need little care. Procedures for storage and other contingencies are as follows:

1. Batteries should be stored at a temperature between –10°C and 30°C and cycled every six months. Batteries should be stored for a maximum of one year.

2. Batteries should be cycled prior to putting into service if they have not been cycled within three months. When shipped by Nu-Lec the batteries will have been cycled within the previous 30 days.

3. If batteries are exhausted or are left for more than two weeks without auxiliary supply to the control cubicle, they should be taken out of service, cycled and have their capacity checked before being returned to service.

Caution: These batteries are capable of supplying very high currents. Always turn off the battery circuit breaker prior to connecting or disconnecting the batteries in the cubicle. Never leave flying leads connected to the battery.

REFERENCE
NU-LEC RECLOSER BATTERY REPLACEMENT

Created by: M. Rideout
Revised by: B. Chubbs
Reviewed by: G. Samms
Approved by: G. Samms

MSR018-3: Nu-Lec Recloser Battery Replacement

Battery replacement is recommended after a period of five years. The replacement procedure is as follows:

1. Turn off the battery circuit breaker.

2. Unplug batteries and replace with new batteries. Ensure that polarity is correct.

3. Turn on the battery circuit breaker and ensure that “Battery Normal Status” is restored on the {SYSTEM STATUS – SWITCHGEAR STATUS} display page.

REFERENCE
NU-LEC RELCOSER ABNORMAL OPERATING CONDITIONS

Created by: M. Rideout
Revised by: B. Chubbs
Reviewed by: G. Samms
Approved by: G. Samms

MSR018-4: Nu-Lec Recloser Abnormal Operating Conditions

The operation of the capacitor charging inverter can be affected under abnormal conditions such as when the battery capacity is very low. The following features are used to protect the controller in this situation while still allowing the circuit breaker to keep operating.

1. **Low Power Mode**

   When the batteries are nearly exhausted, the controller will change its capacitor charging mode from normal to low power. In low power mode the controller takes longer to charge the capacitors and the radio supply is shut down. A ‘Low Power Mode’ event is logged whenever this happens.

   When a trip occurs in low power mode, the recloser will go to lockout if the capacitors cannot be recharged quickly enough. Operator close and trip operations can be performed but at a longer time interval than normal. If an operator trip or close request is denied a ‘Cap Chrg’ event will be logged.

   To return to normal power mode, either replace the batteries or re-establish the auxiliary supply for a minimum of 15 minutes.

2. **Excess Close Operations**

   During testing it is possible to carry out so many trip/close operations that the capacitor charging inverter shuts itself down before it overheats. It takes more than 20 operations within a minute to do this and is not going to happen while in service (it only happens during excessive testing.

   When this happens the inverter shuts down for 5 minutes and a ‘Cap Excess Closes’ event is logged. During this time all trip/reclose requests are denied.

REFERENCE
NU-LEC RECLOSER FAULT FINDING

Created by: M. Rideout
Revised by: B. Chubbs
Reviewed by: G. Samms
Approved by: G. Samms

MSR018-5: Nu-Lec Recloser Fault Finding

Faults can only arise in one of the following:

- Circuit breaker
- Control Cable
- Control Cubicle

The best way to determine which is faulty is to use a Test and Training Set to isolate the faulty part. If a Test and Training Set is not available, use the circuit breaker check suggested below and employ substitution techniques to determine where the fault lies:

- Faulty circuit breaker units may be returned to the factory for repair.
- Faulty control cables should be replaced.
- Faulty control cubicles can be checked and repaired as indicated below.

Control Cable Check

The control cable is a "1 to 1" cable. Perform a direct end-to-end test of all the connections in the control cable with an ohmmeter. All pins should show a 1-1 connection less than 0.2 ohms with no shorts between pins.

Circuit Breaker Check

Pins	Test	Use	Expected Result
1 to 5	Resistance	Trip solenoid.	1 Ohm +/- 0.5 Ohm
2 to 5	DC Voltage	Auxiliary supply transformer (if fitted). This has been rectified internally so a DC full wave rectified signal is present.	25-45 volts DC measured with a true RMS meter with the XFMR primary energized.
3 to 5	Resistance	Close solenoid.	2 Ohm +/- 0.5 Ohm
4 to 8	Resistance	W phase CT	13 Ohm +/- 3 Ohm
12 to 16	Resistance	V phase CT	13 Ohm +/- 3 Ohm
20 to 24	Resistance	U phase CT	13 Ohm +/- 3 Ohm
21 to 11	Resistance	Auxiliary travel switch. Closed indicates the circuit breaker is tripped	< 5 Ohm when circuit breaker is tripped. >100kOhm when circuit breaker is closed.
22 to 11	Resistance	Auxiliary travel switch. Closed indicates the circuit breaker is tripped	< 5 Ohm when circuit breaker is tripped. >100kOhm when circuit breaker is closed.

Connections to the circuit breaker are available on the underside of the circuit breaker and/or on the control cable connector where it plugs into P1 on the Control Cable Entry Module (CCEM) at the bottom of the control cubicle. Some (but not all) of these connections can be simple tested with an ohmmeter. This can show up some circuit breaker faults with a simple test.

The procedure is to test the resistance between the pins as shown in the table above. **Do not apply any other tests than those shown in the table to the circuit breaker.**

Control Cubicle Check

REFERENCE
RECLOSERS

Fault finding within the control cubicle involves determining whether the fault lies in the electronic modules, the wiring or elsewhere. The electronic modules are user-replaceable items. Other faults require the equipment panel or the control cubicle to be returned to the factory. Refer to the manufacturer's literature for control cubicle wiring schematics.

A suggested fault-finding approach is as follows:

1. If the "Microprocessor Running" LED on the operator panel is blinking then the CAPM micro and the Operator Panel Subsystem (OPS) microprocessors are running. If the operator display does not operate there is a problem with the display itself and the OPS should be replaced.

2. If the display is operating, check the {SYSTEM STATUS – SWITCHGEAR STATUS} page for an indication of any power supply problems (Aux Supply Fail and/or Battery OFF) which can be traced and rectified.

3. If the display indicates switchgear disconnected or of there are operating problems then the control cable and the CCEM should be inspected and replaced as required.

4. If the "Microprocessor Running" LED is not blinking, the most likely problem is loss of power. Check for the presence of battery voltage on the battery circuit breaker and the presence of aux supply on the aux supply circuit breaker and rectify as required.

5. If the power supply is present then attempt to go online with WSOS to determine whether the CAPM is functioning correctly. Replace the CAPM or Operator Panel Subsystem as required.

6. If this does not rectify the problem then the equipment panel should be returned for factory repair.

REFERENCE
REPLACEMENT OF ELECTRONIC MODULES IN NU-LEC RECLOSERS

Created by: M. Rideout
Revised by: B. Chubbs
Reviewed by: G. Samms
Approved by: G. Samms

MSR018-6: Replacement of Electronic Modules in Nu-Lec Reclosers

Electronic modules are user replaceable as detailed below. These modules can be damaged by static electricity, water, dirt and mishandling. Therefore, replacement should only be carried out in a suitable place, such as in a workshop, and be carried out by qualified personnel.

Access to the Control Cable Entry Module (CCEM) is obtained by removing its cover plate, which is held in place by fixing screws. To remove the CCEM, hold the ¼" spacer underneath the board with a spanner and remove the four M4 screws.

The electronics compartment houses the Control and Protection Module (CAPM) and the trip and close capacitors. The compartment cover itself forms part of the Operator Panel Subsystem (OPS). Foe access to these parts refer to the CAPM Replacement Procedure in the service manual. Refer to the manufacturer's instructions for control cubicle wiring schematics.

REFERENCE
REPLACEMENT OF CABLES IN NU-LEC RECLOSERS

Created by: M. Rideout
Revised by: B. Chubbs
Reviewed by: G. Samms
Approved by: G. Samms

MSR018-7: Replacement of Cables in Nu-Lec Reclosers

It is easier to remove cables from the cable duct if they are lightly greased with silicone grease.

REFERENCE
FITTING OR REPLACING HEATER IN NU-LEC RECLOSERS

Created by: M. Rideout
Revised by: B. Chubbs
Reviewed by: G. Samms
Approved by: G. Samms

MSR018-8: Fitting or Replacing Heater in Nu-Lec Reclosers

For models fitted with a control cubicle heater, see the manufacturer's technical manual for the associated wiring schematic. The thermostat is located inside the electronics compartment and set to +15°C for proper operation.

N-Series
Automatic Circuit Recloser

Technical Manual

Version 28

Notices

Scope of this Manual

This document describes the features and operation of the N Series Automatic Circuit Recloser (ACR), including the installation and maintenance procedures.

Limitations

This document is copyright and is provided solely for the use of the purchaser. It is not to be copied in any way, nor its contents divulged to any third party, nor to be used as the basis of a tender or specification without the express written permission of the manufacturer.

Disclaimer

The advisory procedures and information contained within this Technical Manual have been compiled as a guide to the safe and effective operation of products supplied by Nu-Lec Industries Pty Ltd.

It has been prepared in conjunction with references from sub-assembly suppliers and the collective experience of the manufacturer.

In-service conditions for use of the products may vary between customers and end-users.

Consequently, this Technical Manual is offered as a guide only. It should be used in conjunction with the customers own safety procedures, maintenance program, engineering judgement and training qualifications.

No responsibility, either direct or consequential, for injury or equipment failure can be accepted by Nu-Lec Industries Pty Ltd resulting from the use of this Technical Manual.

Copyright

© 2003 by Nu-Lec Industries Pty Ltd.

All rights reserved. No part of the contents of these documents may be reproduced or transmitted in any form or by any means without the written permission of the manufacturer.

CONTENTS

1 Introduction 1
Version 28 Features 1
2 Scope of this Technical Manual 3
General 3
Equipment Versions Covered by this Manual 3
Controller Version Covered by this Manual 3
Software Identification System 3
Software Version Covered by this Manual 4
Related Documents 4
Safety Advice Concerning Isolation 4
3 Technical Data 5
Circuit Breaker 5
Basic Timings 5
Fast Trip Input Module Timings 5
Ratings 5
Breaking Duty 7
Duty Cycle ..... $pagenum>
Bushing Boots 7
HV Cables 7
Current Transformers 8
Environmental 8
Control Cubicle 8
General Specifications 8
Protection and Auto Reclose functions 9
Inverse Time Protection 9
Definite Time Protection 10
Instantaneous Protection 10
Sensitive Earth Fault Protection (SEF) 10
Cold Load Pickup 11
Inrush Restraint 11
Loss of Phase Protection 11
Under and Over Frequency Protection (CAPM 5 only) 11
Live Load Blocking 12
High Current Lockout 12
Automatic Protection Group selection 12
Auto - Reclose 12
Directional Blocking 12
Loss of Supply Detection 13
Other Protection Features 13
Power System measurements 13
Demand History 14
SF_6 Gas Pressure Measurement 14
Equipment and Crating Dimensions 15
4 Construction and Operation 17
Circuit Breaker Overview 17
Safety 17
SF6 Pressure Sensing 17
Circuit Breaker Memory 17
Contact Life 18
5 Control Cubicle 21
Connection between Cubicle and Circuit Breaker 21
Tropical, Moderate and Temperate Versions 21
Equipment Panel 21
Sealing & Condensation 21
Mounting & Earthing 22
Radio Mounting Tray Space 22
Auxiliary Power Source 22
Auxiliary Supply Control Cubicle Options 22
Cable Entry 22
Current Injection Point 23
Computer Port 23
6 Control Electronics Operation 25
Control & Protection 25
Operator Panel Subsystem (OPS) 25
Control Cable Entry Module (CCEM) 25
CAPM Operation 25
General Overview 25
Normal Operations 26
7 Operator Control Panel 29
Description 29
Organisation of Liquid Crystal Display 30
Turning on the Control Panel 30
Selecting Displays 30
Using the MENU, SELECT and ARROW Keys 31
Display Groups 31
System Status 31
Event Log 31
Measurement 31
Protection 31
Configurable Quick Keys 31
Quick Key Selection 32
Operation of the Quick Key 32
Password Protection 32
Languages 32
Main Display Groups 33
Measurement Group 33
Protection Group 34
System Status Group 34
8 Work Tags and Controller Mode 35
Definition of Local or Remote User 35
Local/Remote/Hit and Run Mode 35
Local Mode 35
Remote Mode 35
Hit and Run 35
Work Tagging 36
Work Tag Mode Protection Settings 37
9 Protection 39
Overview 39
Trip Flags 39
Trip Flag Display Page 39
Resetting theTrip Flags 40
Operator Settings 40
Protection OFF and Pickup Flags 40
Sensitive Earth Fault Control 41
Negative Phase Sequence Protection 41
NPS Protection Operation 42
Earth Fault Control 42
Protection Settings and Protection Groups 42
Changing Protection Settings 42
Group Copy 43
Inverse Time Protection 44
Protection Curves 46
User Defined Curves 46
Interactions between curve parameters 47
Definite Time Protection 49
Sensitive Earth Fault (SEF) 49
Loss Of Phase Protection 49

Under/Over Frequency Protection (CAPM 5 only) 49
Frequency Measurement 49
Under/Over Frequency Tripping 50
Normal Frequency Close 50
Configuration 51
Live Load Blocking 52
Auto-Reclose 52
Sequence Reset 53
Lockout Conditions 53
High Current Lockout 53
Low Gas Lockout 53
Dead Lockout 54
Single Shot Mode 54
Single Shot Timer 54
Inrush Restraint 54
Cold Load Pickup (CLP) 55
Cold Load Pickup Example 56
Cold Load Pickup Status Display 56
Operator Control of Cold Load Pickup 57
Sequence Control 57
Automatic Protection Group Selection 57
Enabling Automatic Selection 57
Disabling Automatic Selection 57
Selection Rules 58
Fail to Operate Under Protection 58
10 Directional Blocking 59
Characteristic Angle and Fault Regions 59
Phase Directional Blocking 59
Earth/SEF Directional Blocking 60
Earth Residual Voltage Balancing 61
SEF Residual Voltage Alarm 61
Event Record 62
Configuration pages 62
Directional Blocking page 1A 63
Directional blocking page 2A 64
Directional blocking page 3A 64
Parameters to be Configured 65
11 Event Log 67
Display Updating 67
Protection Generated Events 67
Loss of Supply Events 67
Typical Event Log Displays 68
12 Power System Measurements 69
Power System Frequency 69
Switchgear Terminal Designation 69
Power Flow Direction 69
Real Time Displays 70
Maximum Demand Data Displays 70
Monthly Maximum 70
Weekly Maximum 71
Average Demand Data Displays - Default 71
Average Demand - Default 71
Average Demand - Configurable 71
13 Supply Outage Measurement 73
Determination of Supply Outage 73
Configuration and Display 73
Resetting the Counters and Timers 74
Event Record 74
14 Loop Automation 77
15 Generator Control 79
Operation 79
Configuration and Display 79
16 Communications Interfaces 81
V23 Interface 81
RS232 Interface 82
P9 Configurable Baud Rate 82
Operation 82
Radio/Modem Power 83
Connections Into Electronics Compartment 83
17 Input Output Expander Card 85
Field Excitation 85
IOEX as Local/Remote User 85
IOEX Status Page 85
Inputs - Standard Mapping 86
Outputs - Standard Mapping 87
System Healthy Indicator 87
Power Consumption 87
Configurable IOEX 87
Scope 88
Overview 88
18 Accessories 89
Test and Training Set (TTS) 89
Windows Switchgear Operating System (WSOS) 89
Electronics Compartment Computer Port (P9) 89
Telemetry Port (P8) 89
Outline of Operation 90
Manual Operation Set 90
Remote Control Panel 90
Secondary Voltage Injection Interface Set 90
Fast Trip Input Module 90
19 Installation 91
Unpacking & Checking 91
Contents of Crate 91
Unpacking Procedure 91
Control Cable Connection 91
Testing & Configuring 92
Transport to Site 92
Site Installation 93
Tools Required 93
Parts Required (Not supplied by the manufacturer) 93
Site Procedure 93
Cable Tail Connections 94
Surge Arrester Mounting and Terminating 94
Protection of Radio Equipment 95
IOEX Cabling 95
Recloser Earthing 96
LV Auxiliary Power from Mains 96
LV Auxiliary Power from Dedicated Utility Transformer 96
Auxiliary Power from Integrated Transformer 96
Transformer Switching 97
20 Maintenance 103
Circuit Breaker Maintenance 103
Circuit Breaker SF6 Recharging 103
Control Cubicle Maintenance 103
Control Cubicle Cleaning 103
Battery Replacement 104
Protection and Operation Check 104
Door Seal 104
Battery Care 104
Fault Finding 104
Control Cable Check 105
Circuit Breaker Check 105
Control Cubicle Check 105
Replacement of Electronic Modules 106
Replacement of Cables 106

CONTENTS

Fitting or Replacing Heater 106
Abnormal Operating Conditions 106
Low Power Mode 106
Excess Close Operations 106
Appendix A IEC255 Inv. Time Prot. Tables . 107
Appendix B IEEE Inv. Time Prot. Tables 109
Appendix C Non-Std Inv. Time Prot. Curves 111
Appendix D System Status Pages 121
Fault Flags 121
Trip Flags 121
Pickup Flags 121
Operator Settings 1 122
Operator settings 2 122
Switchgear Status 122
Live/Dead Indication 123
Phase Voltage and Power Flow 123
Switchgear Terminal Designation 123
Radio and Time Set 123
Switchgear Type and Ratings 123
Switchgear Wear/General Details 124
Capability 124
Options 1 124
Options 2 124
Options 3 124
Quick Key selection 125
WSOS Port P8 Comms 125
WSOS Port P9 Comms 125
IOEX Status 125
Hit and Run 125
Appendix E Protection Pages 127
Protection Setting 1 (A-J) 127
Protection Setting 2 (A-J) 127
Protection Setting 3 (A-J) 127
Protection Setting 4 (A-J) 128
Protection Setting 5 (A-J) 128
Directional Blocking 1 128
Directional Blocking 2 128
Directional Blocking 3 128
Under/Over Frequency Protection 1 129
Under/Over Frequency Protection 2 129
Phase Protection Trip 129
Phase Single Shot Protection Trip 129
Phase Work Tag Protection Trip 130
Earth Protection Trip 130
Earth Single Shot Protection Trip 130
Earth Work Tag Protection Trip 130
NPS Protection Trip 131
NPS Single Shot Protection Trip 131
NPS Work Tag Protection Trip 131
Appendix F Measurement Pages 133
Instantaneous Demand 133
System Measurements 133
Source Side Voltages 133
Load Side Voltages 133
Supply Outages 134
Monthly Maximum Demand 134
Weekly Maximum Demand 134
Average Demand 134
Appendix G List of Events 135
Appendix H Replaceable Parts & Tools 139
Appendix I Control Cubicle Schematics 141
Appendix J Dimensions 151
Circuit Breaker 151
N15/N27 Pole Mounting Bracket 151
N38 Pole Mounting Bracket 152
Adjustable Substation Mounting Bracket 152
Radio Tray Mounting Space 153
PTCC 153
Appendix K Silicone Grease Hazard Data .. 155

LIST OF FIGURES

Circuit breaker features 19
Equipment panel 24
Control System Block Diagram 27
Operator Control Panel 29
Available Quick Key functions 31
Four main display groups 33
Measurement Group pages 33
Protection Group pages 34
System Status Group pages 34
Time multiplier, effects on the inverse curve 44
Additional time, effects on the inverse curve 44
Instantaneous, effects on the Inverse curve. 45
Maximum time, effects on the inverse curve. 45
Minimum time, effects on the inverse curve. 45
Threshold element, effects on the inverse curve. 46
Protection curve modified by minimum, maximum times and instantaneous element. 47
Interaction between Instantaneous threshold current and maximum time. 47
Co-ordination between fuse and IEC 255 inverse curve using the threshold current multiplier. 48
Composite curve changes due to different settings of threshold current multiplier. 48
Over Frequency Detection 50
Effect of inrush current settings on a protection curve . 55
Cold Load multiplier (CLM) settings applied to protection curves 56
Characteristic angle and fault regions 59
Earth/SEF directional protection 60
Event Log example-Phase to Phase fault 68
Sequence Reset Example 68
Connecting the control cable (1) 91
Connecting the control cable (2) 92
Disconnecting the control cable 92
Cable Tail Installation 95
LV Auxiliary Supply Connection 96
HV Termination 98
Common earthing and LV supply 99
Circuit breaker mounting and dimensions 100
Utility aux transformer and integrated external transformer 101
Control cubicle - general arrangement 141
Control cubicle - battery loom 142
Control cubicle - main loom connection 143
Control cubicle - Single integrated aux power supply .. 144
Control cubicle - Single LV aux power supply 145
Control cubicle - Integrated plus LV aux power supply 146
Control cubicle - Dual low voltage auxiliary supply -110/ 240 Volts 147
Control cubicle - Dual LV aux power supply 148
Control cubicle - Heater/thermostat connection 149
Control cubicle - Control cable service drawing 150
Circuit Breaker Dimensions 151
N15/24 Pole Mount Bracket 151
N38 Pole Mount Bracket 152
Adjustable Substation mounting bracket 152
Radio mounting space 153
PTCC 153
PTCC bottom view 154

1 Introduction

The N-Series Automatic Circuit Recloser (ACR) is a state-of-the-art electronically controlled outdoor, pole mounted, three phase recloser.

The pole top circuit breaker is one of the manufacturer's family of outdoor circuit breakers optimised for remote control and automation schemes.

Vacuum interrupters, insulated by SF_6 gas enclosed in a sealed-for-life stainless steel tank, provide for a long low-maintenance service life. A fully insulated cabling system, integral surge arrester mounting brackets and a versatile pole hanging arrangement all contribute to quick, low cost installation. Operation is by solenoids that do not rely on the presence of High Voltage Supply.

Control electronics are housed in a stainless steel control cubicle designed for harsh environmental conditions. An all-weather user-friendly control panel is provided for a local operator.

Remote monitoring and control can also be provided without the addition of a Remote Terminal Unit (RTU).

In this manual, controller events are identified in the text by using 'single quotes'.
Contents of the Operator Control Panel display pages are shown as:

Display Group - Page Title:Text

The control panel is illustrated in Figure 4 (page 29).

Version 28 Features

Version 28 software provides the following new features for the N-Series ACR:

- Operator configurable Quick Keys. See Section 7 (page 29)
- *Hit and Run* - provides a time delay between a local operator control Trip or Close, and when the recloser operates. See Section 8 (page 35)
- Negative Phase Sequence (NPS) Protection which allows:
  - ❏ Reliable detection of low level phase to phase faults in the presence of load current.
  - ❏ Detection of downed conductors in areas of high ground resistivity.
  - ❏ Detection of open circuit conductors.

See Section 9 (page 39)

- Alarm and trip options for Loss of Phase Protection. See Section 9 (page 39)
- 600 baud option for communications port P8.
- User - configurable DNP mapping.
- External Trip Flags - indicates external trips caused by the activation of the Fast Trip Input Module (FTIM) or an IOEX input. See Section 9 (page 39)
- Port P9 Configurable Baud Rate - provides the ability to manually configure the baud rate of the CAPM serial port designated as P9. See Section 16 (page 81)

2 Scope of this Technical Manual

General

This Technical Manual details the specification of the N-Series Circuit Breaker (Recloser), its operation, installation and maintenance.

Whilst every care has been taken in preparation of this manual, no responsibility is taken for loss or damage incurred by the purchaser or user due to any error or omission in the document.

Inevitably, not all details of equipment are provided nor are instructions for every variation or contingency during installation, operation or maintenance. For additional information on specific problems or requirements, please contact the manufacturer or your distributor.

Equipment Versions Covered by this Manual

This manual applies to the following equipment:

Pole Top Circuit Breaker - Models:	N15-12	N15-15	N27-125
	N27-150	N38-27	N38-12.5
	N38-170	N38-16	
Pole Top Control Cubicle - Models:	PTCC-TEM	PTCC-MOD	PTCC-TRO

If the recloser is supplied with a 1 Amp SEF option, the suffix “S” will be added to the model code, e.g. N15-12S.

The model numbers are shown on the equipment rating plates.

If your equipment does not correspond to these numbers then this manual is not applicable. Please contact the manufacturer or your local distributor.

Controller Version Covered by this Manual

The Control and Protection Module (CAPM) is explained in Section 6 (page 25)

This manual applies to both the CAPM 4 and CAPM 5 based controllers.

When the Operator Control Panel is turned on the display will show the controller type. See Section 7 (page 29). If it does not show either “CAPM 4” or “CAPM 5” then this manual does not apply and you should contact the manufacturer or your local distributor for advice on obtaining the correct manual required.

Software Identification System

The software loaded into the controller has two important identifiers:

- The Software Version which has the form **XXX-XX.XX**. This identifies the exact software loaded into the program memory on the controller.
- The Configuration Number which has the form **2XXXX**. This identifies the configuration loaded into the database which then controls what the software will do. For example, whether the operator text displays are to be in English or another language.[1]

In order to obtain effective technical support from the manufacturer or your distributor it is vital to note down the software version and the configuration number of your equipment and to quote these when making your inquiry. Without this information it is impossible for our customer service department to identify the software and provide correct support.

The software version and the configuration number are both shown on the Operator Control Panel page:

SYSTEM STATUS-SWITCHGEAR WEAR/GENERAL DETAILS

See Section 7 (page 29) to find out how to use the Operator Control Panel.

A typical example of software version and configuration would be:

Software	**S28-01.00**
Configuration	**21186**

1. In order to change functionality of the equipment it is sometimes necessary to change the software, sometimes the configuration and sometimes both.

Software Version Covered by this Manual

The electronic controller incorporates a microprocessor. The microprocessor software can be configured for different capabilities such as Loop Automation, a variety of protocols, etc. This is called its “Software Capability”.

The software version and configuration determine the functionality of the controller. See Section 3 (page 5).

To find out if this manual applies to the software/ configuration loaded in the controller it is necessary to display the Software Capability list on the Operator Control Panel found on:

SYSTEM STATUS-CAPABILITY

See Section 7 (page 29) for instructions on using the Operator Control Panel.

Having found this page press SELECT and use the ⮜ ⮞arrow keys to view the capability list.

This manual applies if the capability declarations in the screen below are shown.

```
 - - - - - - - CAPABILITY - - - - - - - S
N Recloser(Intl)          ManualNSR01-10**
WSOS P9 Local             ManualN00-218R05+
WSOS P8 Remote            ManualN00-218R05+
```

If the screen does not appear as the above contact the manufacturer or your distributor.

The manual revision is usually stated e.g. R02+ which means revision number 2 or later of the manual. Check Manual part number on the back cover of the publication.

Related Documents

Technical Manuals for the following products are also available:

- Windows Switchgear Operating System (WSOS) – Used to configure the switchgear from a Personal Computer.
- Test and Training Set (TTS) – Used to test control cubicles.
- Specific Telemetry Protocol Implementations - For communications to remote control systems.
- Workshop & Field Test Procedures – A set of instructions on how to test the circuit breaker, Manual Nos N00-509 and N00-548.
- Service Procedures – A set of instructions on how to remove and replace the controller electronics.

For further information on these products and manuals refer to the manufacturer or your local distributor.

Safety Advice Concerning Isolation

The N-Series product is a reclosing circuit-breaker, not an isolator. Because it uses vacuum interrupters the product does not have isolating properties when in the open position.

Consequently a user must use conventional means to prove the load side of the product is dead before coming within the safe operating distance from the product.

3 Technical Data

This section is the specification of the Recloser. For a complete understanding it is essential to also read the other sections of the manual describing the equipment operation.

Note that where timing, current, voltage or other measurement accuracy is given it is as a percentage of value unless otherwise stated.

Circuit Breaker

Basic Timings

Contact Close from energisation of close coil[a]	< 100ms
Opening Time[a.]	< 50ms
Interrupting Time[a.]	< 60ms
Fault Clearing Time on Instantaneous protection for fault > 4 x Setting Current[a.]	< 80ms
Time to contact part from receipt of trip command by operator, telemetry protocol or IOEX	<150ms
Time to contact touch from receipt of close command by operator, telemetry protocol or IOEX	<150ms

a. The precise definition of these times is given in ANSI C37.60.

Fast Trip Input Module Timings

Time until energisation of trip coil from receiving stable signal on input	≤16ms
On state voltage	18-150V AC/DC
On state current	≤10mA
Off state voltage	<3V AC/DC

Ratings

Rated Voltage	
N15	15.5kV
N27	27kV
N38	38kV
Rated Continuous Current[a]	630 Amp
Emergency Load Current - carrying capability (8 Hours)	
N15	850 Amp
N27	850 Amp
N38 - 630 Amp	850 Amp
N38 - 800 amp	850 Amp
Rated Frequency	50/60 Hz
Rated Load Breaking Current[a.]	630 Amp
Rated Cable Charging Breaking Current (N15 and N27)	25 Amp
Rated Cable Charging Breaking Current (N38)	40 Amp
Rated Single Capacitor Bank Breaking Current	250 Amp
Rated No-Load Transformer Breaking Current	22 Amp

Rated Symmetrical Interrupting Current	12.5 kA
Rated Asymmetrical Short-circuit Making Current (peak)	31.5kA
Rated Symmetrical Making Current (rms)	12.5kA
Rated Short-time Withstand Current (rms)	12.5kA
Rated Duration of Short-circuit	3 sec
Rated Peak Withstand Current (peak)	31.5kA
Short Time Current Recovery Time	180 sec
Impulse Withstand Phase/Phase, Phase/Earth, Across Interrupter	
N15	110kV
N27 - 125kV option	125kV
N27 - 150kV option	150kV
N38 - 150kV option	150kV
N38 - 170kV option	170kV
Impulse Withstand Phase/Phase, Phase/Earth, Across Interrupter when SF_6 replaced by dry air	70kV
Power Freq Withstand Phase/Phase, Phase/Earth, Across Interrupter	
N15	50kV
N27	60kV
N38	70kV
Closing Mechanism	Solenoid
Opening Mechanism[b]	Spring
D.C. Resistance Bushing/Bushing N15/N27	<100 micro Ohm
D.C. Resistance Bushing/Bushing N38	<140 micro Ohm
Tank Construction	Welded Stainless Steel
Insulating Medium	SF_6 Gas
SF_6 Operating Gas Pressure at 20°C at sea level	10 to 35kPa Gauge
Maintenance Interval[c]	5 Years
Earthing[d]	12mm stud provided
Applicable Standards	
N15 and N27	IEC 62271-100 ANSI C37.60
N38	IEC 60694 ANSI C37.60

a. An 800 Amp, 16kA for 3 secs, 40kA peak rated device is also available.
b. The opening mechanism is operated either by solenoid or manual lever.
c. In heavily polluted environments regular checking/cleaning of insulators should be carried out as required.
d. Earthing details in "Recloser Earthing" (page 96) must be strictly adhered to.

Breaking Duty

The duty limits of the circuit breaker are shown in the table below.

Circuit Breaker is rated for ANSI C37.60 duty cycle.Contact wear is automatically calculated for each interrupter by the control cubicle on the basis of fault current and mechanical operations.

The remaining contact life is shown on the operator control panel. See "Contact Life" (page 18) for more detail.

Circuit Breaker Model	Mechanical Operations[a]	Contact Wear			
		Rated Load[a.]	6 kA Fault	12.5 kA Fault	16 kA Fault
N15	10,000	10,000	1,000	100	N/A
N27	10,000	10,000	1,000	50	N/A
N38	10,000	10,000	1,000	520	500

a. Equipment manufactured before 01 November 1999 is rated for 3 000 operations.

Duty Cycle

Maximum allowable duty cycle at full short current rating:

- Open-0.5s-Close.
- Open-2s-Close.
- Open-2s-Close.
- Open followed by 300 second recovery time.

Bushing Boots

The circuit breaker is normally supplied with outdoor elastomeric bushing boots. The boots suit insulated cable sized 16-32 mm diameter and comprise an unscreened insulated system.The characteristics of the boot alone (disregarding the cable insulation) are detailed in the following table.

N15/N27-Boot Part No: INS020F - Silicone	
Taut string phase to earth clearance	400mm
Creepage	777mm
N15/N27-Boot Part No: R01-318 - Silicone	
Taut string phase to earth clearance	465mm
Creepage	1100mm

HV Cables

Cable is usually provided by the manufacturer pre-cut and terminated to fit the circuit breaker bushings and rated to suit the requirements of the utility.

Alternatively cable can be supplied by the utility if appropriate (e.g. to terminate HV Aerial Bundled Cable). The manufacturer warrants the equipment only if suitably insulated and watertight cable and terminations are used. Contact the manufacturer or your local or distributor to check cable type for suitability.

Standard cable supplied by the manufacturer is detailed in the following table.

Lug Size - mm^2	Stranding	Material	Rating (Amps)
300	61/2.52	Copper	800
240	19/4.01	Aluminium	630
185	19/3.5	Aluminium	400
80	7/3.75	Aluminium	250

Current Transformers

There is no access to current transformer connections on the equipment. This data is supplied for information only.

Ratio	2000:1
Accuracy 10 Amp - 800 Amp	±0.5%
Accuracy 800 Amp - 12500 Amp	±2.5%

Environmental

Operating Temperature[a]	-30°C to +50°C
Operating Humidity	0 to 100%
Operating Solar Radiation	1.1kW/m² max
Operating Altitude[b]	3000m max

a. Temperature range depends on control cubicle versions.
b. Altitudes above 1000 meters must be de-rated per ANSI C37.60.

Control Cubicle

General Specifications

Standard control cable length[a]	7m
Maximum vertical separation from circuit breaker with standard control cable.	5m
Maintenance interval[b]	5 years
Auxiliary supply voltage (LV AC mains supply)	As Ordered +10 -20%
Required auxiliary supply rating	50 VA
Battery	2 x 12V 7.2Ah
Battery hold up time from fully charged[c]	5 days
Battery recharge time (new battery to 80% nominal capacity)	10 hours
Battery replacement interval[b.]	5 years
Battery Low Voltage[d]	23V
Battery High Voltage[d.]	32V
Earthing[e]	10mm earth stud
Heater power (where fitted)	120W
Radio/Modem A radio or modem may be fitted by the manufacturer or by the utility, for remote communications. Space, power and data interfaces are provided within the control cubicle.	
Radio/Modem Power Supply Voltage (set by user)	5 - 15V DC
Radio/Modem Power Supply Continuous Current	3A
Radio/Modem Power Supply Max Current	5A for 30 sec with 20% duty cycle
Radio/Modem Space on Radio Panel	See Figure 50 (page 153)
Radio/Modem Interface[f]	V23 or RS232

Radio/Modem Power Shutdown Time	1 - 1440 mins
Timing Accuracy	±10 secs
Control Electronics Thermal Restraints	
Continuous Primary current	800A
Short time primary current	16kA for 3secs
Short time current recovery time	60 sec
Recloser Operations[g]	20 in 1 minute, 1 per minute thereafter
Local Operator Controls Local Operator Control is through the Operator Control Panel, refer to later sections.	

a. Other control cable lengths available-4and 11meters.
b. Battery replacement interval is influenced by location.
c. Assumes no radio/modem power drain or IOEX card connected. At the end of the holdup period, power is available for a minimum of 10 recloser operations. When exhausted the battery is disconnected.
d. Temperature compensated at 48mV/°C.
e. Earthing details in "Recloser Earthing" (page 96) must be strictly adhered to.
f. See Section 16 (page 81)
g. See "Abnormal Operating Conditions" (page 106)

Protection and Auto Reclose functions

The control electronics have in-built protection and auto-reclose relay functions as below.

Separate setting currents are available for phase, NPS, earth fault and sensitive earth fault (SEF). The setting currents apply to all trips in a sequence. However curves, multipliers and other parameters may be set separately for each trip in a sequence.

Multiple sets of protection settings are available. See Section 9 (page 39) for a full description of protection functions.

Inverse Time Protection

Inverse Time Curves available	Refer Appendix A. B and C.
Phase Setting Current Range	10 to 1260 Amps
Earth Setting Current Range	10 to 1260 Amps
Setting Current Resolution	1 Amp
Setting Current Accuracy[a]	5%
Maximum Current for which curve applies	12.5 kA
Maximum Setting Current Multiple for which curve applies	x30
Time Multiplier	0.05 - 2
Time Multiplier Resolution	0.01
Maximum Time to Trip[b]	2 - 180 secs
Maximum Time to Trip Setting Resolution	0.1 sec
Minimum Time to Trip[b.]	0 - 2 sec
Minimum Time to Trip Setting Resolution	0.01 secs
Additional Time to Trip[c]	0 - 2 secs
Additional Time to Trip Setting Resolution	0.01 secs
Phase Threshold Multiplier[db.]	1 - 10
Resolution of Multiplier Setting	0.1
Earth Threshold Multiplier[b.d.]	1 - 10

Resolution of Multiplier Setting	0.1
Timing Accuracy[e]	5%,±20 ms
NPS Trip Current Setting Range	10 - 1260 Amps
NPS Trip Current Setting Resolution	1 Amp
NPS Trip Current Setting Accuracy	±10%
NPS Trips in sequence to Lockout	1 - 4

a. Current accuracy applies to protection relay function only and excludes accuracy of current transformers.
b. Applies to inverse time and instantaneous protection only.
c. Applies to inverse time protection only.
d. A trip is inhibited when the line current < “setting current” x threshold multiplier
e. Timing refers to time to initiate operation of circuit breaker (opening and closing times are in addition). See "Inverse Time Protection" (page 9)

Definite Time Protection

Available as an alternative to inverse time on phase, NPS and earth. Setting Current parameters are as for inverse time protection.

Definite Time range	0.05 - 100 sec
Definite Time resolution	0.01 sec
Timing Accuracy[a]	±50 ms

a. Timing refers to time to initiate operation of circuit breaker (opening and closing times are in addition). See "Inverse Time Protection" (page 9)

Instantaneous Protection

Available as an additional element on inverse time or definite time protection or as an alternative without inverse time or definite time. Instantaneous protection can be applied to phase, NPS and earth protection.

Multiplier of Trip Current Setting (applies to both phase and earth)	1 - 30
Resolution of Multiplier Setting	0.1
Maximum Effective Setting	12.5 kA
Trip Current Setting Accuracy[a]	±10%
Transient Overreach for X/R < 10	<5%
Transient Overreach for X/R > 10	<10%

a. Current accuracy applies to protection relay function only and excludes accuracy of current transformers.

Sensitive Earth Fault Protection (SEF)

Available as an additional protection element. Operates as definite time. The number of SEF trips which can occur in a reclose sequence before lockout occurs is user set.

SEF Trip Current Setting Range	4 - 20 Amp[a]
SEF Trip Current Setting Resolution	1A
SEF Trip Current Setting Accuracy[b]	±5%, ±0.5A
SEF Operating Time	0.1 - 100 secs
SEF Operating Time Resolution	0.1 secs
SEF Operating Time Accuracy[c]	±50ms
SEF Filter Attenuation at 150Hz	>28dB
SEF Trips in sequence to lockout	1 - 4

a. 1A SEF option available.

b. Current accuracy applies to protection relay function only and excludes accuracy of current transformers
c. Timing refers to time to initiate operation of circuit breaker (opening and closing times are in addition). See "Inverse Time Protection" (page 9)

Cold Load Pickup

This is an additional protection feature, which operates with inverse time and instantaneous protection.

Cold Load Multiplier Range	1 - 5
Cold Load Multiplier Resolution	0.1
Cold Load Time Constant Range	1 - 480 mins
Cold Load Time Constant Resolution	1 min
Timing Accuracy	±1 min

Inrush Restraint

This is an additional protection feature, which operates with inverse time and instantaneous protection.

Inrush Restraint Multiplier Range	1 - 30
Inrush Restraint Multiplier Resolution	0.1
Inrush Restraint Time Range	0.05 - 30 sec
Inrush Restraint Time Resolution	0.05
Timing Accuracy	±20ms

Loss of Phase Protection

This is an additional protection feature, which operates independently of the protection elements.

Loss of Phase Threshold Voltage range	2 - 15 kV
Loss of Phase Threshold Voltage setting resolution	1V
Loss of Phase Threshold Voltage accuracy[a]	5%,±250V
Loss of Phase Time range	0.1 - 100 sec
Loss of Phase Time resolution	0.1 sec
Loss of Phase Time accuracy	±50ms

a. Includes accuracy of voltage transformers in circuit breaker.

Under and Over Frequency Protection (CAPM 5 only)

This is an additional protection feature and is only available if the CAPM 5 module is used.

Frequency setting range[a]	45 - 65 Hz
Frequency setting resolution	0.1 Hz
Accuracy (for sinusoidal input)	± 0.05 Hz
Frequency Dead Band (hysteresis)	0.2 Hz
Number of under or over frequency cycles before tripping	2 to 1000
Frequency calculation	Once per cycle averaged over 2 cycles
Low Voltage Inhibit range	4 to 23 kV
Low Voltage Inhibit setting resolution	1V

Normal Frequency Close Time	1 to 1000 secs

a. Under/Over tripping frequencies and normal frequencies are interlocked by software so that only viable settings are possible.

Live Load Blocking

This is an additional protection feature, which operates independently of the protection elements.

Live Load Threshold Voltage	2000V - 15000V

High Current Lockout

This is an additional protection feature, which operates in conjunction with the protection elements.

Maximum Effective Setting	12.5kA
Minimum Effective Setting	10 A
Current Setting Resolution	1 A
Accuracy	±15%

Automatic Protection Group selection

This is an additional protection feature.

Auto Change Time	10 - 180 sec
Auto Change Time Resolution	±1 sec

Auto - Reclose

Trips in Sequence to Lockout	1 - 4
Reclose Time After First Trip in Sequence	0.5 - 180 sec
Reclose Time After Second and Third Trips in Sequence	2 - 180 sec
Reclose Time, Timing Resolution	0.1 sec
Reclose Time, Timing Accuracy[a]	±0.1 sec
Single Shot Reset Time	0 - 180 sec
Single Shot Reset, Timing Resolution	1 sec
Single Shot Reset, Timing Accuracy	±1 sec
Sequence Reset Time	3 - 180 sec
Sequence Reset, Timing Resolution	1 sec
Sequence Reset, Timing Accuracy	±1 sec

a. Timing refers to time to initiate operation of circuit breaker (opening and closing times are in addition). See "Basic Timings" (page 5)

Directional Blocking

System Phase/Earth Nominal Voltage for correct operation	2 - 25kV
Phase Protection Blocking:	
Characteristic Angle setting range	±180 deg
Characteristic Angle setting resolution	1 deg
Characteristic Angle accuracy	±10 deg

Time to Determine fault direction	30 ms
Earth/SEF Protection Blocking:	
Characteristic Angle setting range	±180 deg
Characteristic Angle setting resolution	1 deg
Characteristic Angle accuracy from 2 – 5A earth current	±30 deg
Characteristic Angle accuracy from 5 – 20A earth current	±20 deg
Characteristic Angle accuracy above 20A earth current	±20 deg
Earth Protection Blocking Time to determine fault direction	30 ms
SEF Protection Blocking Time to determine fault direction	500 ms
Minimum Line/Earth Polarising Voltage for Phase Blocking to Operate	500 V
Minimum Residual Earth Polarising Voltage for Earth blocking to Operate	20 - 100%
Minimum Residual Earth Polarising Voltage for SEF blocking to Operate	5 - 100%
Residual Earth Voltage dynamic balance limit	20%
Residual Earth Voltage dynamic balance rate	0.6% per sec
Minimum SEF Definite time when Directional Blocking is ON	0.5 secs

Loss of Supply Detection

Live Terminal Threshold Voltage	See "Power System measurements" (page 13)
Loss/Restoration of Supply Timeout	0.1 - 100 sec
Loss/Restoration of Supply Timing Accuracy	-0ms, +150ms/

Other Protection Features

Fault Reset Time[a]	50 - 800ms
Fault Reset Time Accuracy	±20 ms
Sequence Control	Available

a. Applies to all protection elements.

Power System measurements

HV line measurements on all three phases are made as follows

Voltage Range (RMS Phase/Earth) N15/N27	2 - 15kV
Voltage Range (RMS Phase/Earth) N38	2 - 25kV
Voltage Resolution	1V
Voltage Accuracy[a]	2.5% ±25V
Live Terminal Threshold Voltage range[b]	2 - 15kV
Live Terminal Threshold Voltage setting resolution[b.]	1V
Live Terminal Threshold Voltage accuracy[a.b.]	5% ±250V
Live Terminal Threshold Hysteresis	-20%

Phase Current Range (True RMS)[c]	2.5 - 800 Amp
Earth Current Range (True RMS)[c.]	1 - 800 Amp
Current Resolution	1 Amp
Phase Current Accuracy[a.]	2.5% ±2 Amp over range 10 - 800 Amp
Earth Current Accuracy[a.]	2.5% ±2 Amp over range 1 - 800 Amp
Apparent Power Range	0 - 54 MVA
Apparent Power Resolution	1 kVA
Apparent Power Accuracy[a.]	±5% over range 20 - 800 Amp
Real Power Range[d e]	-54 - 54 MW
Real Power Accuracy[a.d.e.]	±5% of apparent power
Real Power Resolution	1 kW
Reactive Power Range[d.]	0 - 54 MVAR
Reactive Power Resolution	1 kVAR
Reactive Power Accuracy[a.]	±5% of apparent power
Unsigned Power Factor	0.5 - 1.0
Power Factor Resolution	0.01
Power Factor Accuracy	±0.05
Measurement Filter Time Constant (Step Response)	2 sec
Measurement Update Rate	0.5 sec

a. Includes accuracy of switchgear current and voltage transformers.
b. Used for Live/Dead display, Live Load Blocking and Loss Of Supply detection.
c. Measurements are zeroed for currents less than lower value in range.
d. In database for transmission by a protocol.
e. Used to accumulate kWh reading for weekly maximum demand data.

Demand History

Average Demand Sample Times[a]			5, 15, 30 and 60 minutes	
Storage times for the average/weekly demand default data set				
Sample period (minutes)	5	15	30	60
CAPM 4 - Minimum storage time (days)	26	78	156	312
CAPM 5 - Minimum storage time (days)	78	234	468	936
Event History				
Minimum number of typical events stored in the event history			3,000 events	

a. Configurable history can be accessed via WSOS, thus allowing the operator to select sample period and items stored. This will affect the specified storage times.

SF_6 Gas Pressure Measurement

Nominal Pressure at 20deg C	35 kPa Gauge
Gas Pressure Display Resolution	1 kPa
Gas Pressure Display Accuracy	±5 kPa

Gas Low Alarm Setting	15 kPa Gauge @ 20° C
Gas Low Alarm Accuracy	±5 kPa

Equipment and Crating Dimensions

Equipment Weights	
Part	**Weight (kg)**
Control cable	6
Control cubicle	35
HV cables (3m long, 180mm^2 Al cables, qty 6) complete with bushing boots.	26
Internal Voltage Transformer	21
Pole Mounted Circuit Breaker	225
Pole mounting bracket	24
Sundry Mounting items	8
Gross weight of crate	404
Dimensions	
Control Cubicle	See Figure 51 (page 153)
Pole Mounted Circuit Breaker	See Figure 46 (page 151)
Crate Dimensions (mm)	
Width	1160mm
Depth	730mm
Height	1640mm

4 Construction and Operation

This section describes the construction and operation of the circuit breaker. For a full understanding it should be read in conjunction with the specification in Section 3 (page 5).

Circuit Breaker Overview

The circuit breaker uses ganged vacuum interrupters inside a fully welded stainless steel tank filled with SF_6 gas. See Figure 1 (page 19) for identification of major features.

The circuit breaker is closed by an internal solenoid which is energised by a capacitor in the control cubicle. The close operation closes the vacuum interrupters, charges the opening spring and latches the mechanism in the closed position. This is indicated by the pointer on the side of the circuit breaker.

The circuit breaker is opened by pulling down on the trip lever or by energising the internal trip solenoid. This unlatches the mechanism which is then opened by the opening spring. The open position is indicated by the pointer on the side. The trip solenoid is also energised by a capacitor in the control cubicle.

The position of the circuit breaker is measured by two internal travel limit switches (one indicating close, the other open). These are monitored by the control electronics.

High voltage connections are made with insulated cable terminated on epoxy bushings. Cable and bushings are covered by silicone grease filled elastomeric boots. Surge arrester brackets are provided on the front and rear of the circuit breaker which will accommodate most common surge arrester types. These brackets also provide lift points.

Connection to the control cubicle is by a control cable which plugs into the Switch Cable Entry Module (SCEM) located in a compartment on the underside of the circuit breaker.

The standard mounting bracket can be fitted to most types of power poles. See Figure 34 (page 100). Mounting brackets with increased or reduced pole clearance are also available. The manufacturer can supply clamping rings that secure the bracket to a circular pole without using bolts through the pole.

In the case of internal arc fault, a panel on the rear (pole) side of the circuit breaker ruptures to vent the over-pressure. This reduces the risk of explosion or detachment from the power pole. Since the circuit breaker is not oil filled a major fire hazard is eliminated.

Current transformers and voltage screens embedded in the bushings, send signals to the control electronics which monitors phase current, earth current and phase/earth voltage. If the control cable is disconnected (at either end) the CTs are automatically shorted by circuitry in the SCEM card.

Safety

Always follow proper safety procedures. This Recloser is not suitable for use as a point of isolation. If work on the electrical system is to be carried out, de-energise the recloser and confirm electrical and mechanical indications.

Any conductors that should be de-energised by the opening of the recloser should be tested and proved dead prior to opening non rated switchgear, or applying earths to the system.

SF_6 Pressure Sensing

The circuit breaker incorporates a pressure sensor which measures the SF_6 gas pressure. Pressure is monitored by the control electronics and displayed on the operator control panel.

Topping up of the SF_6, if required, is carried out through the gas fill valve on the lower back of the circuit breaker.

Circuit Breaker Memory

The circuit breaker incorporates an electronic memory that is used to record information pertinent to the unit. The following is available on the operator display:

- Serial Number.
- Breaking Rating.
- Continuous Current Rating.
- Number of Mechanical Operations (incremented on close).
- Rated Voltage.
- Contact Life Remaining (by phase).

Contact Life

The vacuum interrupters in the circuit breaker have the duty rating given in Section 3 (page 5).

The control electronics measures the interrupted current every time the contacts open. This measured current is used to calculate the amount of contact wear that each interrupter has suffered and the contact life remaining is reduced accordingly.

The remaining contact life is held in the circuit breaker memory and can be displayed on the Operator Control Panel.

If remaining life reaches zero on any phase the circuit breaker should be returned to the manufacturer for refurbishment.[1]

1. Since the actual breaking current is measured and since most faults are considerably lower than the maximum line fault current, a much longer service life is to be expected from this method of monitoring wear compared to a simple operations count method.

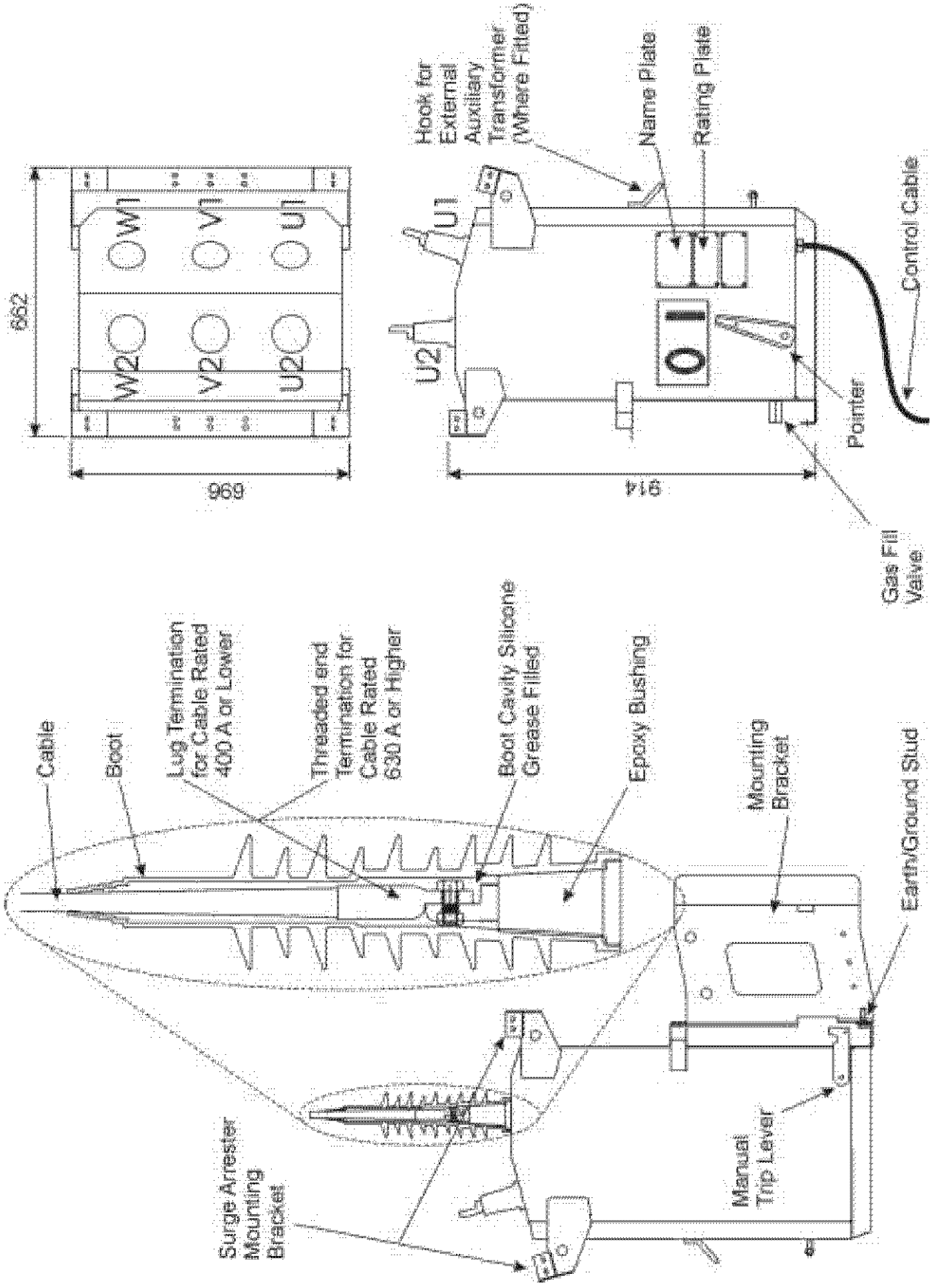

Figure 1: Circuit breaker features

5 Control Cubicle

The control cubicle is purposely designed for outdoor pole mounted operation.

It features a hinged hatch for all weather access by operations staff and a door for access by maintenance staff. Both the door and the hatch can be padlocked for security.

Figure 51 (page 153) shows the cubicle's dimensions.

Connection between Cubicle and Circuit Breaker

The circuit breaker is connected to the control cubicle by the control cable. The cable plugs into compatible ports at both the cubicle and the underside of the circuit breaker.

Tropical, Moderate and Temperate Versions

Tropical, moderate and temperate climate versions of the control cubicle are available:

- The tropical version is well ventilated and is suitable for climates where the ambient temperature can reach 50°C and only occasionally goes below 0°C, with a lower limit of -10°C.
- The moderate version has reduced ventilation and is used in environments where the temperature rarely goes above 40°C and occasionally goes below -5°C with a lower limit of -15°C.
- The temperate version has reduced ventilation and a heater fitted to the equipment panel. It is suitable for climates where the ambient temperature rarely goes above 40°C but can fall as low as -30°C.

Equipment Panel

Inside the cubicle is an equipment panel with the following key features. See Figure 2 (page 24) and Figure 34 (page 100).

- The **Mains Compartment** houses LV mains transformers (where fitted) and miniature circuit breakers for batteries and auxiliary supply.
- The **Electronics Compartment** houses the Control and Protection Module (CAPM) and the Operator Panel Sub-System (OPS). This compartment is sealed to protect the electronics from airborne pollution.
- The **Battery Compartment** houses two 12Volt batteries.
- The **Radio Mounting Tray** is used to mount the communications radio, modem or IOEX (where fitted), see Section 17 (page 85). This hinges down to expose the radio/modem and can be detached to allow workshop fitting of the radio/modem.
- The **Control Cable Entry Module** provides termination and filtering for the control cable, this is housed behind a removable panel. The incoming control cable connects to P1 of the CCEM, the internal wiring loom N03-505 connects to P2 of the CCEM.
- A **Heater** for the control cubicle can be fitted.

Running up the centre of the equipment panel is a cable duct used to carry the internal wiring. The equipment panel can be removed by disconnecting external connections and unbolting.

The equipment panel is arranged so the most heat sensitive components, the batteries, are located low down close to the point of air entry. In tropical situations this ensures the batteries stay within a few degrees of ambient at all times thus maximising their life.

Additionally the part which generates the most heat, the mains power supply (where fitted), is located at the top of the cubicle where its heating effect on other parts is minimised.

Sealing & Condensation

All vents are screened against vermin entry and the door is sealed with replaceable foam tape. Complete sealing against water entry under all conditions is not expected e.g. during operation in the rain with the hatch open. Instead, the design is such that if any water does enter, it will run out of the bottom without affecting the electrical or electronic parts. The well-vented and self-heating nature of the cubicle ensures moisture will dry out rapidly. The extensive use of stainless steel and other corrosion proof materials ensures the presence of moisture has no detrimental effects.

Condensation can be expected to form under some atmospheric conditions such as tropical storms. However, due to the insulated and well-vented design, any condensation will be on metal surfaces where it is of no consequence. The water runs out in the same way as any other water entering the cubicle. Condensation will run out of the bottom and be dried by ventilation and self heating.

The Electronics Compartment, which houses the main electronic modules, is well sealed and is only opened for electronic module replacement.

Mounting & Earthing

The control cubicle is mounted on the pole using either bolts through the pole or strapping around the pole. It is connected to the circuit breaker by the detachable control cable.

WARNING
The control cubicle must be earthed to the circuit breaker to complete the recloser earthing scheme as detailed in Section 19 (page 91).

Radio Mounting Tray Space

The space available on the radio tray to install customer equipment is shown in Figure 50 (page 153).

Auxiliary Power Source

The auxiliary supply is used to maintain charge on the sealed lead-acid batteries that provide standby power when auxiliary power is lost. The controller monitors the status of both the auxiliary and battery supplies.

A low power mode is activated when the batteries are nearly exhausted due to loss of the auxiliary supply. This mode minimises power consumption while still maintaining basic functionality. See Section 20 (page 103) for more information.

Auxiliary power comes from one of three sources:

- LV supplies provided by the utility. This connects into the control cubicle and is called an *LV Supply.* In this case the control cubicle is fitted with a suitable transformer and its nameplate indicates the required auxiliary supply voltage.
- HV line supply to a Voltage Transformer (VT)[1] fitted inside the circuit breaker tank. This is called an *Integrated HV Supply*. In this case the circuit breaker rating plates indicate the transformer voltage rating.
- HV line supply to a Voltage Transformer (VT) fitted outside the circuit breaker tank. This external VT is connected into the circuit breaker and is called *an Integrated HV Supply*. In this case the rating plate on the transformer indicates its voltage rating.

"Site Procedure" (page 93) gives details of auxiliary supply connection and earthing.

Auxiliary Supply Control Cubicle Options

The control cubicle can be manufactured in a number of different auxiliary supply configurations such as:

- Supply from an external 110V or 240V AC source.
- Supply from an external voltage transformer supplied by the manufacturer.
- Dual 110/240V AC supply from an external source.
- Dual supply from an external 110/240V AC source and external voltage transformer supplied by the manufacturer.

Appendix I (page 141) includes the wiring diagrams detailing the connection of auxiliary power supplies. The configuration is indicated on the control cubicle name plate as:

- AUX SUPPLY 240VAC (or other voltage) for LV supply, or
- AUX SUPPLY INTEGRATED for integrated HV supply, with external VT supplied by the manufacturer.

The Miniature Circuit Breakers (MCB) at the top of the control cubicle in the mains compartment protect the battery (centre MCB) and the auxiliary supplies.

When equipped for *Integrated HV Supply* the Aux MCB should always be closed during operation or testing even if the auxiliary supply transformer is not energised. This ensures correct operation of the memory in the circuit breaker.

For a *single LV supply* an AUX OUT socket can be factory fitted as an option to provide a power outlet in the control cubicle. This is shown in Figure 2 (page 24). For dual supplies two AUX supply MCB's are fitted, one for each supply.

Cable Entry

All cables enter the control cubicle from the underside as shown in Figure 2 (page 24). Cable entries are provided for:

- The control cable from the recloser that plugs into connector P1 at the bottom of the battery compartment.
- One or two LV mains supplies (where fitted) which run behind the equipment panel. The two 20mm holes provided for cable entry can also be used for external I/O entry if required.
- Communication Cable/Radio Antenna (where fitted), a 16mm hole is provided for cable entry.

1. The VT is designed only for the manufacturer's control cubicle and cannot provide power for any other purpose.

Current Injection Point

A six way connector called the “Current Injection Point” is located on the mains compartment. This is used with the Test and Training Set (TTS) to perform secondary injection while the circuit breaker is connected. This allows injection of equipment in service without disconnection.

Computer Port

A 25 way female D-type connector is located on the electronics compartment cover above the Operator Control Panel. It connects to an RS232 port on the electronic controller for use with WSOS on a portable computer. This port is also used to upgrade electronic controller operating software, including installation of new telemetry protocols.

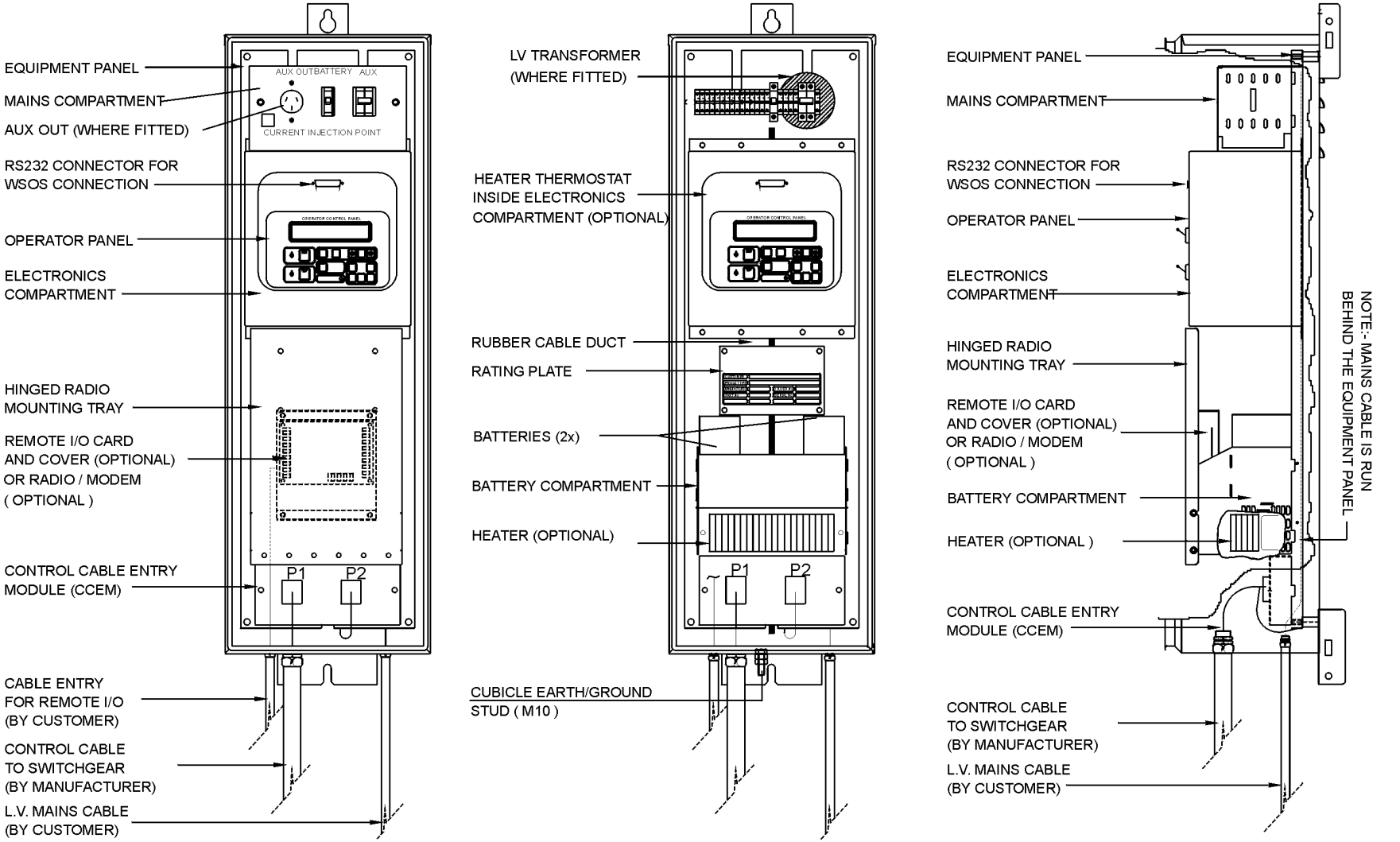

Figure 2: Equipment panel

6 Control Electronics Operation

❏ The control system block diagram is shown in Figure 3 (page 27). The main features are explained below.

Control & Protection

The main module of control electronics is the Control and Protection Module (CAPM).

The circuit breaker accompanying this manual uses either module version 4 (CAPM 4) or module version 5 (CAPM 5). It is centred around a microprocessor and carries out the following functions:

- High speed sampling of the line Current Transformers (CTs), calculation of RMS phase current and earth spill current.
- High speed sampling of the line Capacitive Voltage Transformers (CVTs), calculation of RMS phase/earth voltages.
- Calculation of apparent, real and reactive power flows from the above.
- Protection relay functions.
- Auto-reclose relay functions.
- Monitoring of circuit breaker auxiliary switches.
- Monitoring of circuit breaker gas pressure.
- Charging of the close and trip capacitors.
- Discharging the close and trip capacitors into solenoids to operate the circuit breaker, either automatically or by local or remote operator command.
- Charging of the battery from the auxiliary supply, changeover to battery on loss of auxiliary supply and disconnection when the battery is exhausted.
- Driving the Operator Panel Sub-system (OPS).
- Driving the external communications interface to allow monitoring and control from a remote computer or operator over a communications link.
- Driving the WSOS over an RS232 link. The connector for this link is located on the electronics compartment above the operator control panel.

The CAPM is a replaceable unit.

Operator Panel Subsystem (OPS)

This comprises the electronics compartment cover, an operator control panel with LCD display, a membrane keyboard and its controlling microcomputer.

The Operator Panel Subsystem is a replaceable unit.

Control Cable Entry Module (CCEM)

This is located at the bottom of the battery compartment and provides termination and filtering for the signals from the circuit breaker.

The CCEM is a replaceable unit.

CAPM Operation

General Overview

The CAPM utilises a Motorola 68332 microprocessor, with non-volatile “Flash” EEPROM and 1Mbyte of volatile read/write static memory.

- Non-volatile memory is used to hold programs, configuration parameters and historical data.
  - ❏ CAPM 4 has 2 Mbytes of memory.
  - ❏ CAPM 5 has 4 Mbytes of memory.
- Volatile memory is used as run time workspace.

There are no user-adjustable hardware features on the CAPM, no links, no DIL switches and no variable resistors. Re-programming of the microprocessor can be carried out using a built-in loader from a portable computer.

On power-up, or when the circuit breaker is connected, the CAPM reads the data from the memory inside the circuit breaker. The memory data in the circuit breaker includes error check codes enabling the CAPM to validate the data. The status of the data is displayed on the operator panel.

When a local operator presses buttons on the control panel a character is sent from the Operator Panel Subsystem to the CAPM, which then carries out the required command.

The Recloser operates when the CAPM discharges its trip or close capacitors into the circuit breaker solenoids. The CAPM continually monitors the capacitors and will only discharge them into the circuit breaker solenoids if the charge is sufficient for correct recloser operation. In addition, the CAPM will only close the circuit breaker if there is sufficient charge in the trip capacitor to trip the circuit breaker. This ensures the circuit breaker will always be ready to trip if closed onto a fault.

- If a trip or close request occurs when there is insufficient charge in the capacitors it is discarded (this never happens in normal operation).

The CAPM will not attempt to operate the Recloser and any control requests will be discarded if any of the following conditions exist. Also see Section 7 (page 29).

- The isolate switches on the operator panel are in the isolate position.
- The circuit breaker is disconnected.
- The circuit breaker memory data cannot be read or is invalid.

The SF_6 gas pressure inside the circuit breaker is monitored by the CAPM using the built-in pressure transducer that detects a gas low alarm condition if present. The gas low alarm and the actual pressure is displayed on the operator control panel page.

SYSTEM STATUS-SWITCHGEAR STATUS: SF6 Pressure Normal 35kPag

Current transformers and voltage screens in the circuit breaker are monitored to provide the protection and measurement functions.

Normal Operations

The circuit breaker, control electronics and power supplies are monitored for correct operation. This data is used to generate a “system healthy” signal which is available either for transmission by a telemetry protocol or as an output on the optional IOEX (Input/Output Expander) module. This can be used for remotely monitoring the health of the circuit breaker.

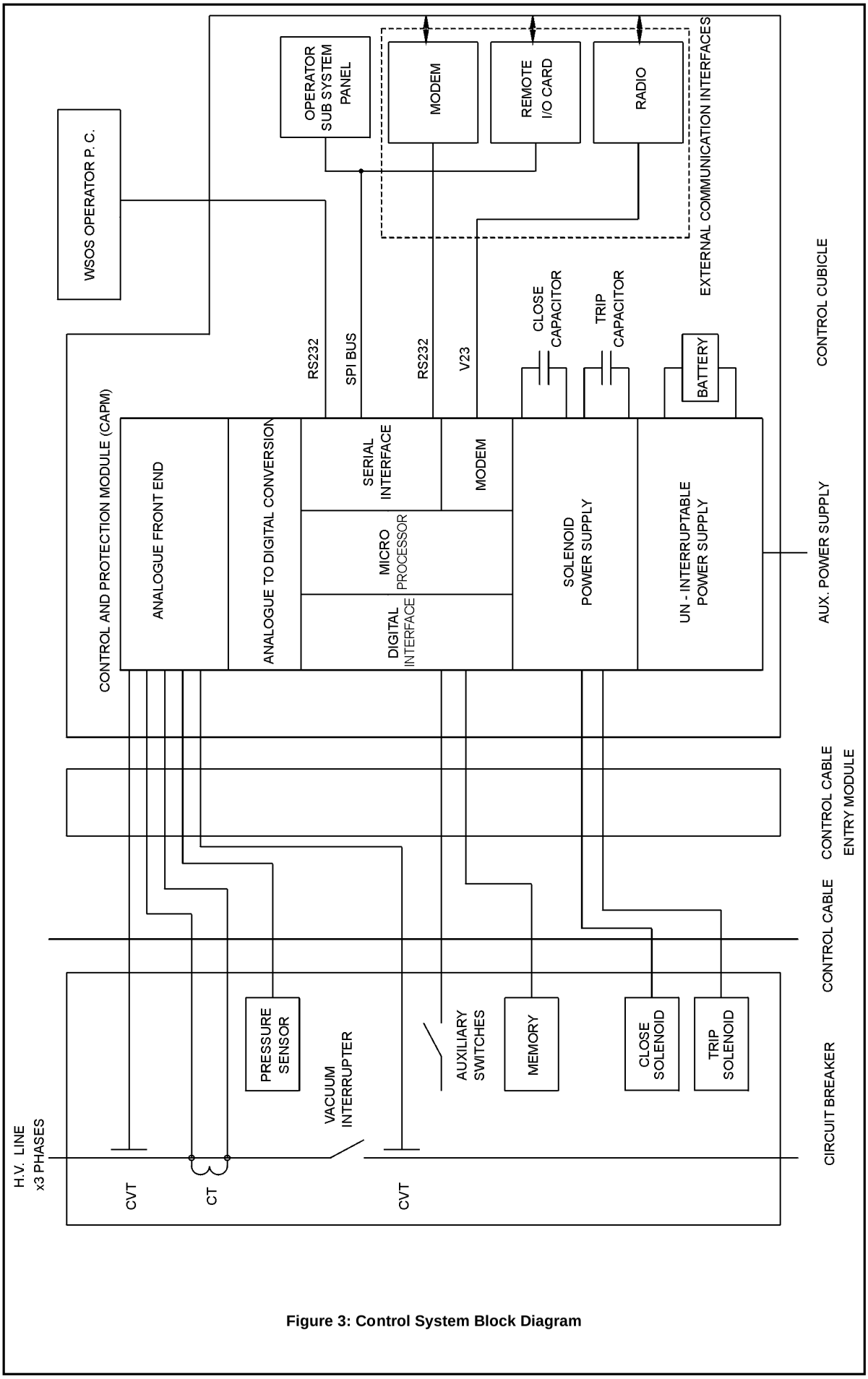

Figure 3: Control System Block Diagram

7 Operator Control Panel

Description

The Operator Control Panel (OCP) is mounted inside the control cubicle on the equipment panel.The OCP consists of a four-line Liquid Crystal Display (LCD) and keypad with switches and Light Emitting Diodes (LEDs), which are used to select and monitor the functionality of the recloser.

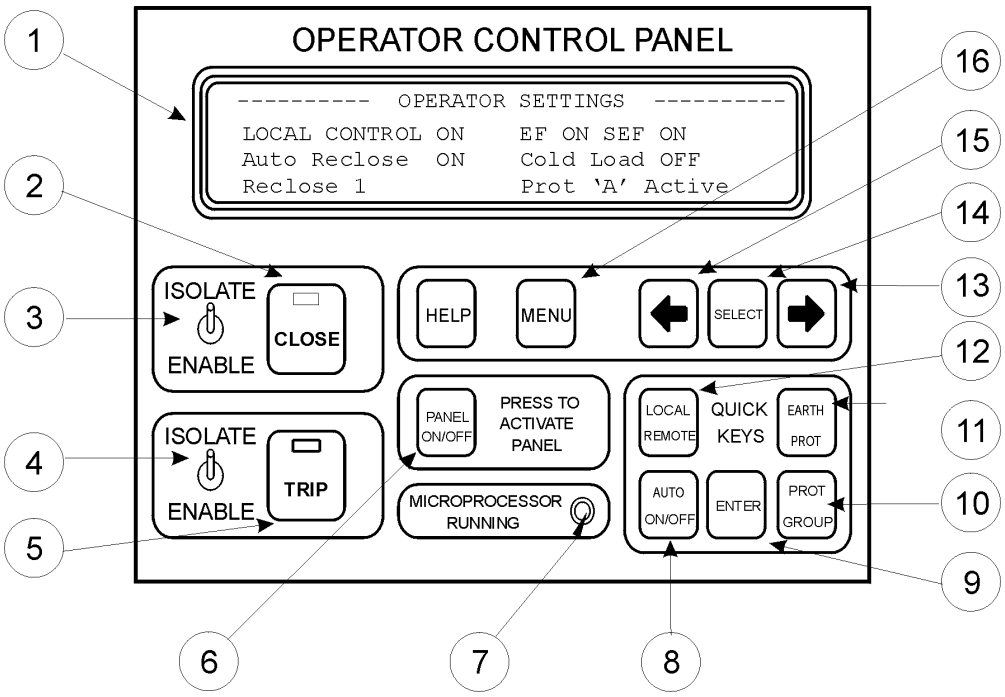

Figure 4: Operator Control Panel

Number	Item	Description
1	Display	Back-lit LCD, 4 line with 40 characters per line.
2	Close key	Generates a Close request to the CAPM when the panel is active. A green LED is embedded in the key. The LED is lit when the recloser is closed.
3	Isolate/Enable Close switch	Isolates the Close key. When the switch is in the Isolate position the close coils in the magnetic actuator are disconnected from the control electronics. Thus the switch provides a physical isolation point for the control circuitry. The recloser cannot be closed and an audible alarm in the panel will sound. The Close key operates normally when the switch is in the Enable position.
4	Isolate/Enable Trip switch	Isolates the Trip key. When the switch is in the Isolate position the trip coils in the magnetic actuator are disconnected from the control electronics. Thus the switch provides a physical isolation point for the control circuitry. The recloser cannot be opened and an audible alarm in the panel will sound. The Trip key operates normally when the switch is in the Enable position.
5	Trip key	Generates a Trip request to the CAPM when the panel is active. A red LED is embedded in the key. The LED is lit when the recloser is open.
6	Panel ON/OFF key	The PANEL ON/OFF key turns the panel on and off.

Operator Control Panel description

Number	Item	Description
7	Microprocessor Running LED	The green MICROPROCESSOR RUNNING LED flashes at 2 second intervals to indicate the control electronics are running normally. If the flashing stops or becomes intermittent it indicates a fault condition (e.g. loss of power). The LED flashes at all times, even when the panel is turned off.
8	Quick key[a]	AUTO ON/OFF
9	Enter key	Activates selected Quick key setting, and restores original display.
10	Quick key	PROTECTION GROUP
11	Quick key	EARTH PROTECTION
12	Quick key	LOCAL/REMOTE
13	RIGHT scroll key	➢ - select pages within a group.
14	SELECT key	Press to SELECT Menu item.
15	LEFT scroll key	➢ - select pages within a group.
16	MENU scroll key	Selects the group required.

Operator Control Panel description

a. Default Quick Keys shown.

Organisation of Liquid Crystal Display

The four-line LCD display is structured as shown below.

```
- - - - - -  PAGE TITLE - - - - - -
Data Field 1           Data Field 2
Data Field 3           Data Field 4
Data Field 5           Data Field 6
```

The data fields are used differently on each display page. Display pages with this format are shown in Figure 6 (page 33).

Some special display pages are different, these are shown in the relevant sections in this manual. See Appendix D (page 121) and Appendix E (page 127).

Turning on the Control Panel

The **PANEL ON/OFF** key turns the panel on and off. When off, the display is blank and none of the keys work. The panel will turn itself off if no keys are pressed for ten minutes.

When activated the control panel shows a start-up message for 5 seconds then shows the display page.

```
SYSTEM STATUS - TRIP FLAGS
```

If the time and date has not been set since the last restart then the operator must set it, by using the **SELECT,** ➢ and pressing the **MENU** key twice before other displays can be selected.

Selecting Displays

The **MENU** key selects the display group. The ➢ keys select pages within the group, this is shown in Figure 6 (page 33).

Therefore to select a particular display page:

1. Press the MENU key to get the desired group on display.
2. Press ➢ to get the page or sub-group required.
3. Press SELECT to get to the sub-page required, where necessary

Changes can be made to existing program settings using either of two operator controlled methods at the control panel.

The **MENU**, **SELECT**, ➢ **"LEFT ARROW"** and ➢ **"RIGHT ARROW"** keys facilitate manual navigation within the operator panel display pages.

The **QUICK KEYS** are interface keys that facilitate the rapid changing of operator settings.

Using the MENU, SELECT and ARROW Keys

All settings can be changed by the following procedure:

1. Find the page on which the setting is shown as described in "Selecting Displays" (page 30).
2. Press **SELECT** until the required setting starts to flash.
3. Press ⮜ ⮞ keys to change the setting to the new value required. Press **MENU** or **ENTER** to put the new setting into service.

Display Groups

Many different displays are available and are divided into four main groups described below. See Figure 6 (page 33)

System Status

Contains all status information about the recloser and control electronics e.g. battery low, operations count, SEF enabled/disabled.

Information on this display group is given in Appendix D (page 121).

All System Status displays have the capital letter **'S'** in the top right corner. See Figure 9 (page 34)

Event Log

Shows the event record for the recloser.

More information is given in Section 11 (page 67) and in Appendix G (page 135).

See Figure 6 (page 33).

Measurement

Contains all information about the HV line measurements made e.g. line current, line voltages, maximum demand data.

See Section 12 (page 69) and Appendix C (page 111). All Measurement displays have the capital letter '**M**' in the top right corner. See Figure 7 (page 33)

Protection

Contains all the protection settings currently in use e.g. Trip Current Settings, curves, reclose times.

More information is given in Section 9 (page 39) and Appendix E (page 127).

All Protection displays have the capital letter **'P'** in the top right corner. See Figure 8 (page 34)

Configurable Quick Keys (Version 28)

Quick Keys provide the capability for the operator to quickly access commonly used programme settings from any screen.

Quick Keys are configurable and can be selected by the operator using the OCPM or WSOS

Listed in the following table are the operator functions that can be programmed to individual Quick Keys.

A set of stickers is available from the manufacturer that includes the wording for each of the available functions.

The operator can apply the sticker as required to match the selected functionality of the Quick Key. See Appendix H (page 139) for the sticker part numbers

ACO On/Off
Auto Reclose On / Auto Reclose Off Protection Off
Cold Load On/Off
Earth/Ground Protection
Live Load Blocking
Local/Remote/Hit and Run Selection
Loop Automation On/Off
Negative Phase Sequence Protection On/Off/Alarm
Protection Group Selection

Figure 5: Available Quick Key functions

Reset Flags
Work Tag On/Off

Figure 5: Available Quick Key functions

Quick Key Selection

The Quick Keys can be configured at

SYSTEM STATUS - Quick Key Selection

The following screen is displayed:

```
 - - - -  QUICK KEY SELECTION- - - - S

Local/Remote                Earth Prot
Auto ON/OFF     Enter       Prot Group
```

To configure a Quick Key press **SELECT** or **ENTER** and the following screen is displayed with the first field flashing.

```
 - -  CHANGE QUICK KEY SELECTION - - S

Local/Remote                Earth Prot
Auto ON/OFF     Enter       Prot Group
```

Pressing the **ARROW** keys will scroll the operator through the available functions. See Figure 5 (page 31)

Press **MENU** or **ENTER** when the required function is displayed.

To configure another Quick Key press **SELECT** and repeat the above procedure.

Only one function can be assigned to each Quick Key.

If the operator selects a function that has been assigned to another Quick Key the selection will revert to a blank setting.

When a Quick key is changed an event is generated in the Event Log.

Operation of the Quick Key

A Quick Key may be pressed at any time and will display the relevant page, with the selected field flashing:

- Pressing the Quick Key will continue to cycle the flashing field through the options available.
- Pressing the **ENTER** key activates the newly selected setting and immediately restores the original display.[1]

Whenever a quick key is in use the ⮜ ⮞ and **SELECT** keys are disabled and pressing the **HELP** key displays a special message which details Quick Key operation.

Password Protection

Some settings require passwords to be entered before they can be changed. If a password protected field is selected for change the user is prompted for the password. A password (which can be up to five characters in length) is entered in the following way:

1. The⮜ ⮞ keys are pressed until the first character of the password is displayed.
2. SELECT key is then pressed.
3. This sequence is repeated until the required number of characters has been entered.

Once this is done the password does not need to be entered again while the operator panel is on. However, when the operator panel turns OFF the password will need to be re-entered for further setting changes.

The default factory password is **<CAPM>** but it can be changed by the user with WSOS. The factory password does not have to be remembered - the controller prompts the operator for it automatically.

Languages

The OCP language can be changed by selecting[2]

SYSTEM STATUS - OPTIONS 1: Language

The following languages are available:

- English (International and USA).
- Spanish.
- Portuguese.

1. A particular option may not be available to the operator if it has been disabled on the “SYSTEM STATUS-OPTIONS” page
2. The changing of the language does not generate an event in the Event Log.

Main Display Groups

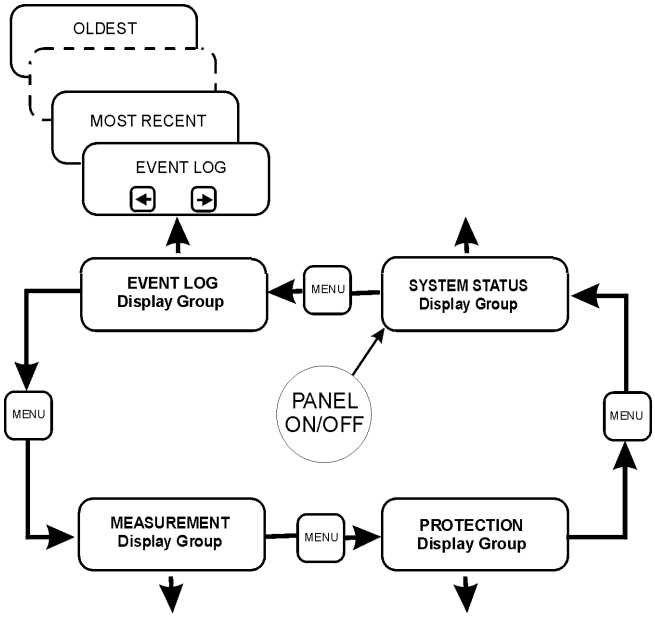

Figure 6: Four main display groups

Measurement Group

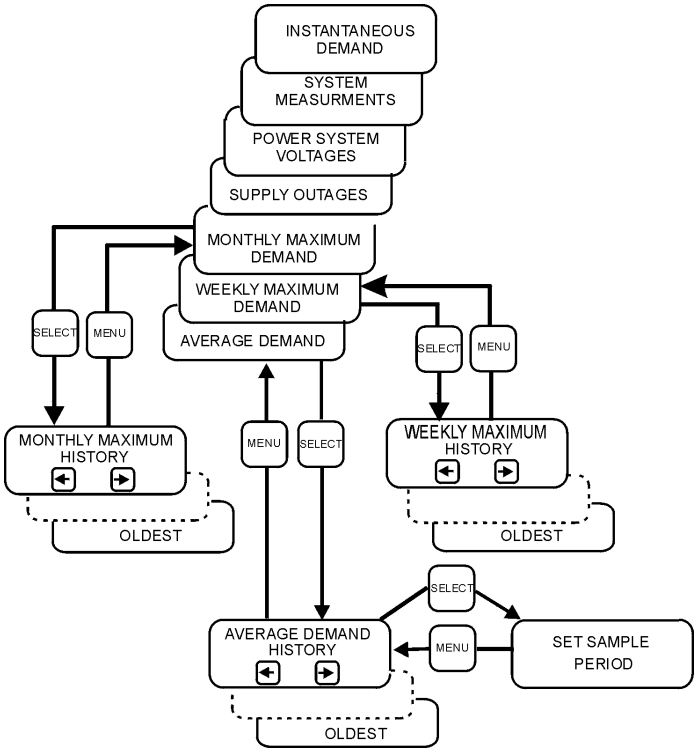

Figure 7: Measurement Group pages

Protection Group

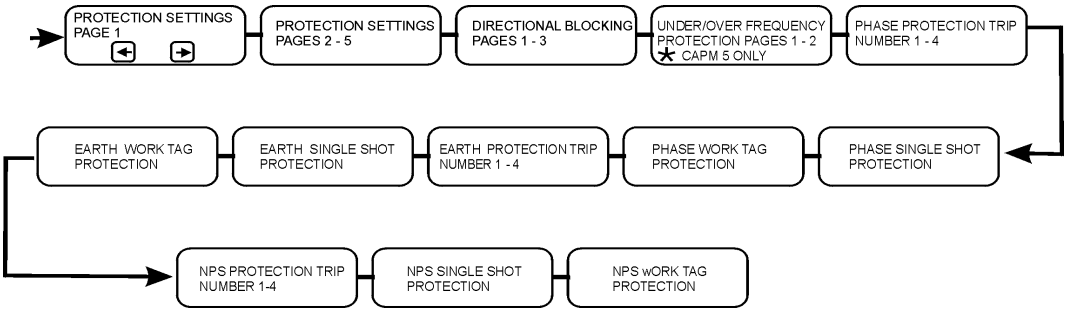

Figure 8: Protection Group pages

System Status Group

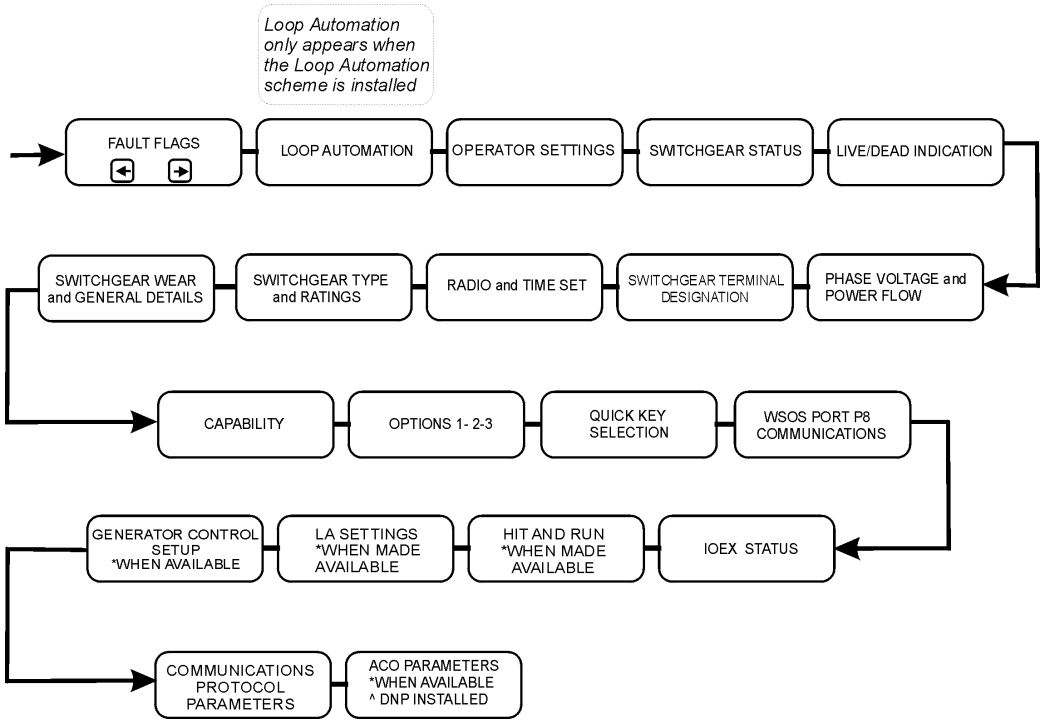

Figure 9: System Status Group pages

8 Work Tags and Controller Mode

An important feature of the controller is that it is always in one of two modes, either Local or Remote, and can have a Work Tag applied by Local or Remote operators.

The mode and the tag specify the circumstances under which the circuit breaker can be closed to ensure operational safety.

Definition of Local or Remote User

There are three kinds of local user:

- The Operator Control Panel.
- An IOEX card designated as “Local”. This might apply, for example, to an IOEX card used in a substation to provide control from a panel inside a building.
- A Windows SOS (WSOS) computer plugged into the computer port on the front of the user control panel. See Section 18 (page 89).

There are three kinds of remote user:

- An IOEX card designated as “Remote”. This might apply, for example to an IOEX card used to interface to a SCADA system remote terminal unit. See Section 17 (page 85).
- A remote control protocol. These are almost always designated as remote users. Full information is given in the relevant protocol manual.
- Remote Panel - this panel provides the capability to access a maximum of five reclosers from one location.

An IOEX is designated Local or Remote from the Operator Control Panel page.

SYSTEM STATUS - IOEX Status

Local/Remote/ Hit and Run Mode

The Local/Remote/Hit and Run selection is carried out on

SYSTEM STATUS - OPERATOR SETTINGS 1

There is a quick key on the panel to make this fast and easy. Setting this mode ensures closing and tagging can only be carried out by the designated local or remote users. It is the equivalent of a Local/Remote/Hit and Run switch on the front panel.

- Local/Remote/Hit and Run does not affect automatic closing.

Most importantly the Local/Remote mode can only be set from the Operator Control Panel.

Local Mode

In this mode only a local user can manually close the circuit breaker (it can still close automatically with the auto-reclose function).

This means a user can go to the control cubicle, set local control mode and know that remote closing is disabled.

Only a local operator can apply/remove the Work Tag when the controller is in Local Mode.

Remote Mode

In this mode only a remote user can manually close the circuit breaker (the circuit breaker can still close automatically with the Auto-Reclose function).

Only a remote operator can apply/remove the Work Tag when the controller is in Remote Mode.

If the local operator is denied a close operation or a Work Tag due to being in Remote Mode then the operator panel will flash the message.

Not Allowed – Change to Local Control and/or remove Work Tag

Hit and Run

The *Hit and Run* feature provides a time delay between a local operator control **TRIP** or **CLOSE** request and when the ACR operates.

This feature is particularly useful in a Substation because it allows the operator to avoid potential hazards when the recloser operates.

There is no change to the operation of the ACR when *Hit and Run* is turned **OFF**.

Hit and Run is made available via WSOS only. When Hit and Run is Available it is configured at

SYSTEM STATUS - Hit and Run

When Hit and Run has been configured it can be turned on at the LOCAL/Remote field at

SYSTEM STATUS - OPERATOR SETTINGS 1:Hit and Run ON

The following tables show the Hit and Run screen and the field descriptions.

Hit and Run					S
Hit/Run Close Hit/Run Close	OFF 120s	P	Hit/Run Trip Hit/Run Trip	OFF 120s	P

Hit and Run screen

Field	Description
Hit/Run Close OFF Hit/Run Close 10s	Hit and Run Close Time This field is used to delay a local operator panel close request. Range: OFF, 10 to 120 sec (increments of 5 secs). *Factory default is OFF*
Hit/Run Trip OFF Hit/Run Trip 10s	Hit and Run Trip Time This field is used to delay a local operator panel trip request. Range: OFF, 10 to 120 sec (increments of 5 secs). *Factory default is OFF*

Hit and Run field descriptions

When Hit and Run is turned ON the operator has 30 seconds to press either TRIP or CLOSE, otherwise the setting will revert to the setting prior to turning Hit and Run ON.

This will also occur when:

- The panel is turned OFF.
- The countdown period is complete.
- The Hit and Run request is aborted by using the SELECT key.

When Hit and Run is turned ON the following screen is displayed

```
- - - - - Hit and Run Countdown - -  S
   Press TRIP or CLOSE within 30 sec

      Press the SELECT key to abort
```

When the operator presses TRIP or CLOSE the following screen will be displayed and the countdown will begin:

```
- - - - - Hit and Run Countdown - -  S
      TRIP will occur in 120 sec

     Press the SELECT key to abort
```

The panel will “beep” every two seconds Hit and Run is on. The beeping will become more rapid during the final ten seconds to action.

An event will be recorded in the Event Log at the start of the Hit and Run period and the end of a Hit and Run countdown or timeout.

Work Tagging

Applying the Work Tag ensures that closing ***cannot*** take place at all, either by a local operator, a remote operator or automatically. Once applied, neither a local user, remote user or the Auto-Reclose function can close the recloser.

Work Tag mode is activated when Work Tag is applied irrespective of Auto Reclose mode status, and is deactivated when the Work Tag is removed.

It is not possible for the operator to close the circuit breaker whilst in Work Tag mode.

If the Work Tag is deactivated whilst Auto Reclose is ON then the Auto Reclose mode will be entered immediately.

The Single Shot timer does not apply to Work Tag mode.

If a trip occurs whilst the Work Tag is applied then an event is logged to identify the Work Tag mode. See Appendix G (page 135)

Work Tags are applied and removed from

SYSTEM STATUS - SWITCHGEAR STATUS: Work Tag OFF

When applied the operator panel flashes the message

Warning – Work Tag Applied

Only a local user can apply/remove the tag when the controller is in Local Mode and only a remote user can apply/remove the tag when the controller is in Remote Mode. This means that a local user *can* remove the Work Tag applied by a remote user but they must first put the controller into Local Mode. If the local operator is denied a close

operation due to the Work Tag being applied the operator panel will flash the message

```
Not Allowed – Change to Local Control and/or remove Work Tag
```

Work Tag Mode Protection Settings

Work Tag Protection settings are used to provide an appropriate protection curve when the Work Tag has been applied.

There are separate protection pages for Phase Work Tag Protection, Earth Work Tag Protection and NPS Work Tag Protection. Each page is similar to the normal protection trip pages.

```
 - NPS WORK TAG PROTECTION TRIP A-P -
Inv IEC255         Time Multiplier 1.00
No Instantaneous
Minimum 0.00s      Additional 0.00s
```

```
 - PHASE WORK TAG PROTECTION TRIP A-P -
Inv IEC255         Time Multiplier 1.00
No Instantaneous
Minimum 0.00s      Additional 0.00s
```

```
 -  EARTH WORK TAG PROTECTION TRIP A-P -
Inv IEC255         Time Multiplier 1.00
No Instantaneous   SEF Definite 5.0s
Minimum 0.00s      Additional 0.00s
```

Appendix E- Protection Pages (page 127) details all the fields for the Work Tag Phase, NPS and Earth protection settings.

9 Protection

Overview

The controller has many different protection features described in this section. In summary it operates as follows:

When there is a line fault the circuit breaker is tripped. The Protection Elements that may activate are:

- Earth Fault (E/F)
- Sensitive Earth Fault (SEF)
- Overcurrent Protection
- Loss of Phase (LOP) Protection
- Under and Over Frequency Protection
- Negative Phase Sequence Protection (NPS)

Each individual element can be programmed to cause the trip depending on the relevant setting. After a protection trip there will be a delay and then a reclose.

This trip/close sequence can be repeated a number of times with protection elements programmed to change between each trip in the sequence.

If the fault cannot be cleared the controller goes to lockout and waits for an operator to initiate the next close. There are a variety of ways the controller can be made to go to lockout without completing the whole reclose sequence.

The controller can store up to ten groups of operator selected protection settings. These are Protection Groups A to J. Once programmed the protection settings rarely change.

In addition to the protection settings there are Operator Settings. This group of settings is independent of the protection settings and it changes the main functionality of the recloser.

Trip Flags

Trip Flag Display Page

This is the first System Status page to appear when the panel is turned on.

The display identifies each protection element that may cause a trip and next to it a ☐ box.

If that particular element caused the most recent protection trip then it will be filled in like this ■.

The following display is a typical example of this page which indicates the most recent trip was

```
 - - - - - - -  TRIP FLAGS - - - - - - - - S
O/C   ■ 03  AB I   LOP ☐  00    Ext ☐  00
E/F   ☐ 01         FRQ ☐  00
SEF   ☐ 00         NPS ☐  00     OPS 0001
```

caused by an Instantaneous Overcurrent (O/C) fault between phases A and B. There has been a total of three such events.

The counter beside the Earth Fault (E/F) element shows that at some time previously there has been a single occurrence of an E/F trip. In this case any instantaneous indication for E/F would have reset when the circuit breaker tripped on O/C protection.

The counter next to the status indicator shows the number of times each protection element has caused a trip. Each counter has a range of 01 to 99 (cannot count past 99).

- Some elements display the letters A, B, C to identify the phase.
- Some elements also display the letter “I” to identify instantaneous trips.

The possible field values are shown below. [1]

TRIP FLAGS											S
O/C	☐■	00-99	ABC	I	LOP	☐■	00-99	ABC	Ext	☐■	00-99
E/F	☐■	00-99		I	FRQ	☐■	00-99[a]				
SEF	☐■	00-99			NPS	☐■	00-99	I	OPS		0000

Trip Flags screen

a. This is a CAPM 5 feature only.

Field		Description
O/C	Phase Overcurrent	The letters to the right of the O/C field identifies the phase or phases faulted The letter “I” will also be displayed for instantaneous trip.
E/F	Earth Fault	The letter “I” will also be displayed for instantaneous trip.

Trip Flags - field descriptions

1. An Operator Trip does not alter the flags.

Field		Description
SEF	Sensitive Earth Fault	This field is still displayed when SEF is unavailable.
LOP	Loss of Phase	The phase or phases lost are indicated by the letter/s to the right of the field.
FRQ	Frequency Fault[a]	Indicates both under and over frequency conditions.
NPS	Negative Phase Sequence Overcurrent	The letter “I” will also be displayed for instantaneous trip.
Ext	External Trip	External trip sources. A trip caused by the activation of a FTIM or an IOEX protection trip input.
OPS	Operations Counter	The “OPS” field indicates the total number of close operations performed by the switchgear.

Trip Flags - field descriptions

a. This is a CAPM 5 feature only.

The setting of

SYSTEM STATUS-OPERATOR SETTINGS 1: Protection OFF

displays Pickup Flags instead of Trip Flags and more than one element may be set at a time.

Resetting theTrip Flags

The Trip Flags will be reset by:

- Any operator close, including remote control commands.
- Start of a new sequence.

The Trip Flags *and* counters will be reset by:

- Pressing a Quick Key configured as “Reset Flags” twice within a ten second period.
- Turning Protection OFF, however the flags and counters will not appear until Protection is turned ON.
- Pressing the SELECT key twice consecutively within a ten second period whilst the Trip Flags screen is displayed.

On the first press of the SELECT key the following display advises the operator what to do next.

RESET TRIP FLAGSS
Press the key again to reset the
flags. Press the menu key to cancel.

Operator Settings

Operator Settings are different from Protection Settings.

They are used by an operator or linesperson on an everyday basis to set the controller into the required mode. For example a linesperson may want to disable Auto-Reclose and Sensitive Earth Fault prior to commencing live line work.

The Operator Settings are all found at

SYSTEM STATUS - OPERATOR SETTINGS 1

and

SYSTEM STATUS - OPERATOR SETTINGS 2

These are:

- NPS Protection On/Off/Alarm
- Local/Remote/Hit and Run selection.
- Earth Fault and Sensitive Earth Fault ON/OFF selection.[1]
- Auto-Reclose ON/OFF, Protection OFF.
- Operational Cold Load Time and Multiplier. See "Cold Load Pickup (CLP)" (page 55).
- Selection of the Active Protection Group.[2]

Protection OFF and Pickup Flags

This command turns all the Protection Features OFF and the circuit breaker will only trip or close in response to a manual operation.[3]

Protection OFF must be Allowed at

SYSTEM STATUS-OPTIONS 1: Prot OFF Allowed/Not Allowed

before Protection can be turned OFF.

A ‘Protection OFF’ event is generated and logged whenever the protection is turned off.

When configured as:

SYSTEM STATUS - OPERATOR SETTINGS 1:Protection OFF

- The controller still logs all pickups and maximum currents and sets the Pickup Flags[4].

1. The Earth Fault, Sensitive Earth Fault and Protection OFF settings may be unavailable to the operator if they have been made unavailable at {SYSTEM STATUS -Options 1}.
2. Operator settings are not affected by changing the Active Protection Group. For example: if Auto Reclose is in force before the Active Group is changed from A to B then Auto Reclose will also be in force after the change.
3. The Protection OFF command resides in the same field as the Auto Reclose ON or Auto Reclose OFF.
4. External Trips are not shown on the Pickup Flag display.

- The circuit breaker will not automatically trip on protection and trip events are not logged.
- If a Loss of Phase (LOP) event occurs, the circuit breaker will not trip but the LOP, A, B or C Pickup Flags are set.
- If either an Under/Over Frequency condition is detected, the circuit breaker will not trip but the Frequency Pickup Flag is set.
- If a NPS event occurs, the circuit breaker will not trip but the Pickup Flag will register.

The Pickup Flags *and* counters will be reset by:

- Pressing a Quick Key configured as “Reset Flags” twice within a ten second period.
- Turning Protection OFF.
- Pressing the SELECT key twice within a ten second period whilst the Pickup screen is displayed.

The following display is an example of the Pickup Flag screen indicating an Under Frequency condition with “Protection OFF”.

On the first press of the SELECT key the following display advises the operator what to do next.

```
- - - - - - - -  PICKUP FLAGS - - - - - - - - s
O/C    ☐ 03  AB I    LOP ☐  00
E/F    ☐ 01          FRQ ■  01
SEF    ☐ 00          NPS ☐ 00        OPS 0001
```

RESET PICKUP FLAGS

Press the key again to reset the

flags. Press the menu key to cancel.

It is possible to configure the controller so the “Protection Off” state cannot be reached. This is set using the

SYSTEM STATUS - OPTIONS 1:Prot OFF Not Allowed

setting. In this case the operator cannot select the “Protection OFF” state, only the active protection groups. Selecting

SYSTEM STATUS - OPTIONS 1:Prot OFF Not Allowed

also has the effect of turning the protection ON if it is not already ON. Protection is normally switched from OFF to ON by selecting either Auto Reclose ON or Auto Reclose OFF.

Sensitive Earth Fault Control

Sensitive Earth Fault (SEF) protection can be made either available or not available with the

SYSTEM STATUS - OPTIONS 1:SEF Available/Not Available

setting. When not available SEF is turned off and there are no facilities for the operator to turn it on.

Negative Phase Sequence Protection

Negative Phase Sequence (NPS) Protection is a protection feature that allows the detection of:

- Low-level phase-phase faults in the presence of load current.
- Downed conductors in areas of high ground resistivity.
- Open-circuited conductors.

NPS Protection can be configured to trip the recloser, or operate a local alarm via IOEX or transmitted to a SCADA system via a communications protocol.

NPS Protection operates as an overcurrent element in addition to the phase, earth and SEF overcurrent protection elements.

NPS Protection shares some common settings with phase, earth and SEF overcurrent protection elements.

NPS Protection Operation

NPS current is a derived current calculated mathematically from the three line currents. NPS currents are zero when line currents are balanced. When line currents are not balanced (because of load imbalances, or an open-circuit conductor, or a phase-phase fault) NPS current is non-zero.

In practice there is usually some amount of NPS current on a healthy network because of imperfect load balance. NPS Protection distinguishes between normal NPS current and NPS currents due to faults by considering NPS current magnitude and duration. Consequently NPS Protection has pickup and time settings in the same fashion as those provided for phase and earth overcurrent protection.

The NPS current is calculated in real time using the formula:

i2 =(ia + ib phase shifted 120 ° + ic phase shifted by 240 °) / 3

The calculated NPS current is fed to the protection algorithms in the same manner as the phase, earth and SEF currents.

The NPS algorithms assume anticlockwise phase rotation.If the network has clockwise phase rotation it is necessary to change the Switchgear Terminal Designation to match the network phase rotation.

For example, if the Switchgear Terminal Designation is A-B-C with clockwise phase rotation, it should be changed to A-C-B. This can be done using the OCP or the Phase Configuration selector on the WSOS Status page.

NPS OFF can be set to either Allowed or Not Allowed and is a password protected feature at

SYSTEM STATUS - OPTIONS 1:NPS OFF Allowed/Not Allowed

NPS protection can be turned ON or OFF at

SYSTEM STATUS - OPERATOR SETTINGS 1:NPS OFF/ ON/NPS Prot Alarm

NPS Protection can be configured from the Operator Panel at

PROTECTION SETTING 2 A-J

or using WSOS.

When NPS protection trips the ACR, the trip and the maximum NPS currents are recorded in the Event Log.

When NPS Prot Alarm is set the recloser will not trip when NPS current is exceeded, a local alarm is activated. This may be seen via the Event log, WSOS, or via a suitably configured IOEX output.

Earth Fault Control

It is also possible to disable control over Earth Fault protection with the

SYSTEM STATUS - OPTIONS 1:EF OFF Allowed/Not Allowed

setting. When Earth Fault OFF is set to Not Allowed, operator control of Earth Fault protection is disabled (and Earth Fault protection is permanently ON). This can be used in conjunction with the SEF Available setting to restrict operator control to SEF only.

Protection Settings and Protection Groups

Protection settings are usually set once by the protection engineer and are not altered unless system conditions change.

A Protection Group is a group of protection settings that defines the protection functionality of the circuit breaker.

The CAPM 4 and CAPM 5 controllers support up to ten completely independent Protection Groups. These groups are referred to as Protection Groups A to J.

At the Operator Control Panel, the operator selects either Group A, B, C, **...** or J to be Active from

SYSTEM STATUS - OPERATOR SETTINGS 1:Prot 'A'...'J' Active

The number of protection sets (A-J) available to the operator may also be configured using WSOS.

Whenever a new Protection Group is activated or a protection trip occurs, an event is written to the Event Log indicating which Protection Group is now in operation. The event logged is for example 'Prot Group A Active'; 'Prot Group F Active'; etc.

All the protection parameters are programmed and stored independently for each of the groups. For example, if the Sequence Reset Time is required to be 20 seconds in both A and B groups, then it must be explicitly set to 20 seconds in both groups of protection settings.

Changing Protection Settings

All protection parameters and operator settings are held in non-volatile memory on the CAPM. This ensures they are retained through power interruptions. However, if a different CAPM is installed in a control cubicle, or if the control cubicle is replaced, then the protection parameters need to be re-programmed into the CAPM. This is carried out either through the operator panel or via WSOS.

The ten groups of protection settings are programmed on the protection pages. Passwords are required to make changes.

Protection Groups should not be changed whilst a protection sequence is in progress.

When programming protection settings, the technician first selects which protection group of parameters to display on

PROTECTION SETTING 1 (A.....J): Group 'A....J Displayed

This group can then be changed. Selecting a protection group to be displayed ***does not make it active***, that is done by the operator in

SYSTEM STATUS-OPERATOR SETTINGS 1;Prot 'A...J' Active

Because one protection group can be active and another protection group can be displayed (in the protection pages), care must be taken or confusion will result. However, the title line of the display always shows which protection group is currently being displayed by showing an "**A**", "**B**" or **…** "**J**" suffix, such as

PROTECTION SETTING 3 E

The operator can change either the active group or the inactive group. When changes are made to the active group they do not go into service immediately. Instead the changes are saved into the internal database in the controller and go into service when:

- The operator moves off the protection group of pages.
- The operator turns off the control panel.
- The control panel turns itself off after the timeout period.
- The controller is powered off and on again.

This allows the operator to edit the active group and then put the new settings into service as a whole. The operator is informed when the changes are going into service.

When the active group is being edited, the page title flashes to indicate the settings being worked on are different to the ones in service.

Changes can also be made by remote operators using WSOS. If a WSOS operator changes settings, the local operator will see the page title flash to indicate changes are pending. When any user puts their changes into service all pending changes, including those made by other users, go into service.

Group Copy

Group Copy is available to facilitate the setting of several protection groups which all have the same or similar settings. It is possible to copy from the displayed protection group to any of the groups available on the CAPM including the active group[1].

This feature is accessed through the protection group at

PROTECTION SETTING 1 (Copy OFF)

Selecting the field allows the operator to scroll through the available copy options as shown at Appendix E (page 127).

Changes to protection groups are put into service as for any other changes to the active protection group.Overcurrent Protection

The CAPM continually samples the current flowing in the secondaries of the current transformers. These samples are digitally processed by the CAPM to monitor line current for the purposes of overcurrent protection. The phase currents are summed digitally to give the earth current for the purpose of earth fault protection, and NPS current for NPS protection. Digital filtering algorithms are applied to line currents to minimise transient over-reach.

The three current transformer currents are also summed as analogue signals to give the earth (or spill) current. These are sampled and digitally processed for the purposes of Sensitive Earth Fault (SEF) protection. A low pass filter on the spill current reduces sensitivity to harmonics above 60 Hz, reducing SEF sensitivity to transformer in-rush and other harmonic interference.

If any of these signals (Phase, Earth, NPS or SEF) exceed the relevant Setting Current (Phase, Earth, NPS or SEF) then the relay Picks Up. Definite Time, Inverse Time and Instantaneous Protection are used to trip the circuit breaker after pickup:

- Definite Time is a protection function that can be set by the user and it causes a trip at a fixed time after pickup. In the case of Definite Time the timing sequence starts immediately after pickup.
- Inverse time is a protection function in which the curve has an inverse time characteristic. See "Inverse Time Protection" (page 44)
- Instantaneous Protection is an additional trip element that will trip the recloser if the line current exceeds the Instantaneous Multiplier multiplied by the setting current.

In the case of Inverse Time and Instantaneous Protection the timing sequence initiates when the signal exceeds the Threshold Current. The Threshold Current is calculated from the setting current and Threshold Multiplier. See "Interactions between curve parameters" (page 47). If the current falls below the threshold current, the time to trip freezes and will recommence if the current rises back above the threshold current. If the current falls to below 90% of the setting current for longer than the Fault Reset Time, the protection will reset. .

1. It is not possible to replicate an existing group to itself i.e.; Protection Group "B" cannot be copied and saved as Protection Group "B".

The setting currents are set once for all trips in a sequence but other protection parameters (e.g. inverse curve type, multipliers and Reclose times) are set separately for each trip in a reclose sequence. This allows, for example, Instantaneous Protection on the first trip in a sequence and inverse time protection on subsequent trips in the sequence.

To do this, three separate protection setting pages for each trip in a sequence are provided. Phase, Earth and NPS Protection each have a dedicated page. These pages are shown in Appendix E (page 127). The operation of the different protection types is detailed below.

Inverse Time Protection

A variety of inverse time curves are available which cause the circuit breaker to trip faster as the current rises higher. They are available on phase, NPS and earth with separate setting currents.

Inverse time curves are implemented in software in the following way:

- The current is always monitored.
- When it rises above the Threshold Current, the Time To Trip is calculated and the timing starts. This calculation is repeated every few milliseconds in response to changing line currents.
- When the remaining Time To Trip reaches zero, the trip request is issued. If the current falls below the Threshold Current the timing stops but the protection does not reset immediately. This means the relay will never trip at currents below the Threshold Current under inverse time protection.

The parameters that control inverse time protection are:

- Inverse Curve Type.
- Setting Current.
- Time Multiplier.
- Additional Time.
- Instantaneous Trip Element.
- Minimum Time.
- Maximum Time.
- Threshold Multiplier.

The Inverse Curve type is set independently for each trip, Work Tag and Single Shot. See "Protection Curves" (page 46).

The Setting Current is set for phase, NPS, earth or SEF. See "Changes to protection groups are put into service as for any other changes to the active protection group.Overcurrent Protection" (page 43).

.

Time Multiplier: Set independently for each trip. Multiplies the time to trip.	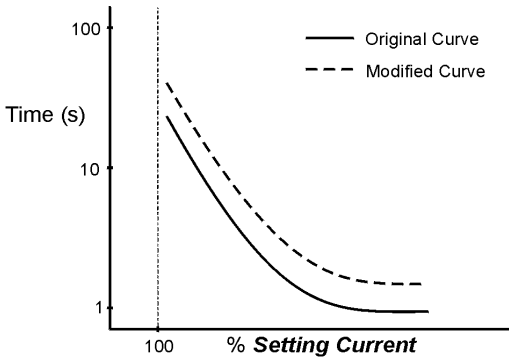 **Figure 10: Time multiplier, effects on the inverse curve**
Time Multiplier: Set independently for each trip, sets an Additional Time To Trip which is added to the inverse curve tripping time.	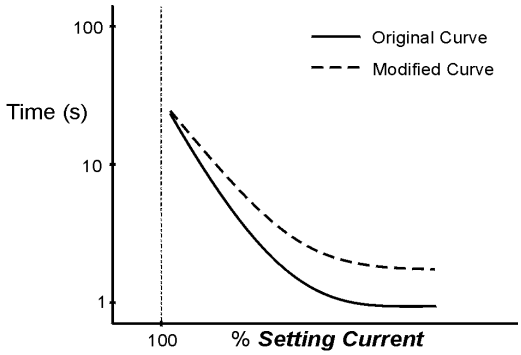 **Figure 11: Additional time, effects on the inverse curve**

An Instantaneous Trip element can be applied which will trip the circuit breaker if the current rises above a user set multiple of setting current.

If the Instantaneous Multiplier is set below the Threshold Current Multiplier then an Instantaneous Trip will only occur after the line current exceeds the Threshold Current. See figure opposite

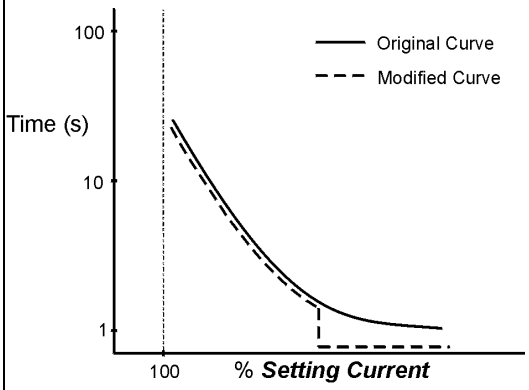

Figure 12: Instantaneous, effects on the Inverse curve.

Minimum Time: Set independently for each trip, sets the Minimum Time To Trip.

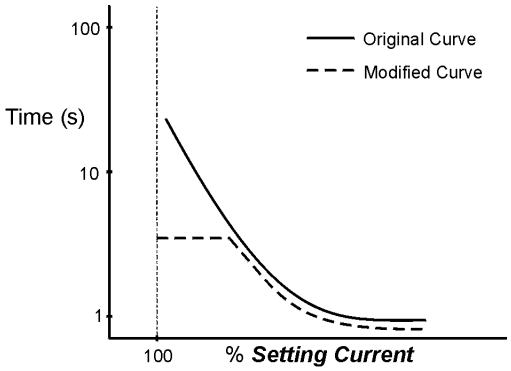

Figure 13: Maximum time, effects on the inverse curve.

Maximum Time: Sets the Maximum Time To Trip if the time exceeds the preset limit.

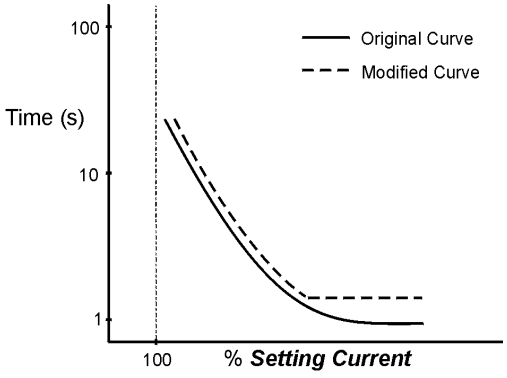

Figure 14: Minimum time, effects on the inverse curve.

Threshold Multiplier: The Threshold Multiplier is used to prevent tripping if the current is below the Threshold Current.

The Threshold Current is the setting current multiplied by the Threshold Multiplier. See figure opposite

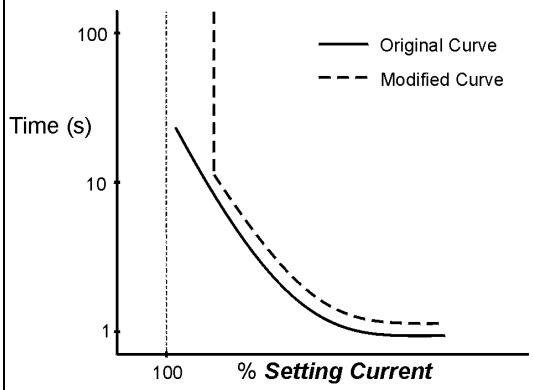

Figure 15: Threshold element, effects on the inverse curve.

Protection Curves

In total there are 48 inverse protection curves stored in the controller's non-volatile memory.

The available curves are defined in the following Appendices:

- 3 Standard IEC255 curves are defined in Appendix A (page 107).
- 3 Standard IEEE Std C37.112 curves are defined in Appendix B (page 109).
- 42 non-standard Curves are defined in Appendix C (page 111).

Any one of the 48 curves can be selected for the phase, NPS and earth protection trips 1 to 4, Single Shot and Work Tag trips.

User Defined Curves

Up to five User Defined Curves may also be selected in the same way as a Protection Curve.

- User Defined Curves are configured using WSOS.
- If no User Defined Curves have been defined, or previously defined curves have been deleted, then the text display will show

PHASE PROTECTION TRIP NUMBER 1 A:User Curves Not Set

This is simply to indicate to the user that the User Defined Curves are available but have not been defined or down loaded [1].

1. Only one instance of this text will be displayed even though there are potentially five curves available.

Interactions between curve parameters

This section describes some of the interactions that can occur between the user selectable inverse curve parameters. In order to understand the interactions between the curve settings it is important to know the way the curves are constructed. The curve settings are applied in the following order:

- Curve Selected.
- Time Multiplier.
- Additional Time.
- Instantaneous Element.
- Maximum Time.
- Threshold Current.
- Minimum Time

.

The figure opposite is an example of a protection curve modified by the instantaneous element and maximum, minimum times.[a]

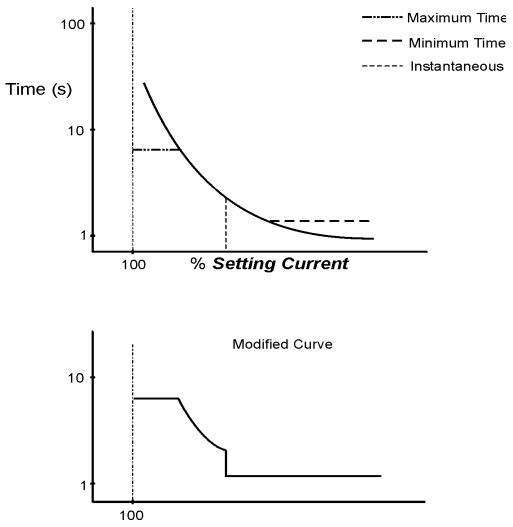

Figure 16: Protection curve modified by minimum, maximum times and instantaneous element.

The figure opposite is an example of using Maximum Time, Instantaneous and Threshold Current multipliers. The Maximum Time is set to 2s, the Instantaneous Multiplier is set to x10, and the Threshold Current Multiplier is set to x2. In this example, pickup will occur at the setting current, the timing sequence will begin at 2 times the setting current, and the instantaneous trip will occur at 10 times the setting current.

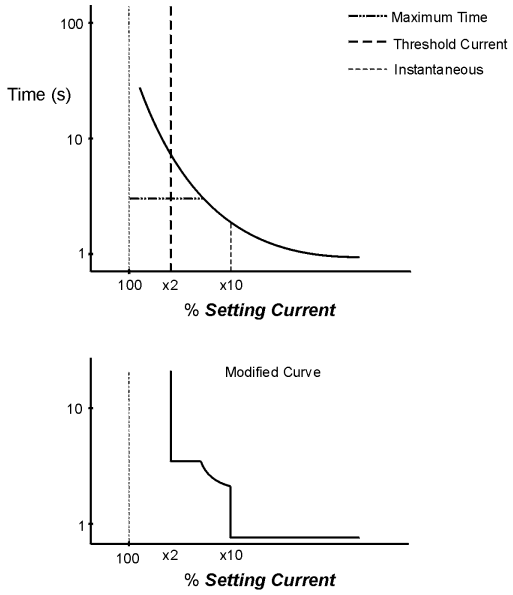

Figure 17: Interaction between Instantaneous threshold current and maximum time.

The figure opposite shows an example of where the Threshold Current may be used.

Here the coordination is lost at currents to the left of where the two curves (fuse and IEC_255 inv) cross. The Threshold Current changes the curve so that at currents less than, for example, 3 times the pickup level, the device does not trip.

This allows coordination with the fuse to be maintained.

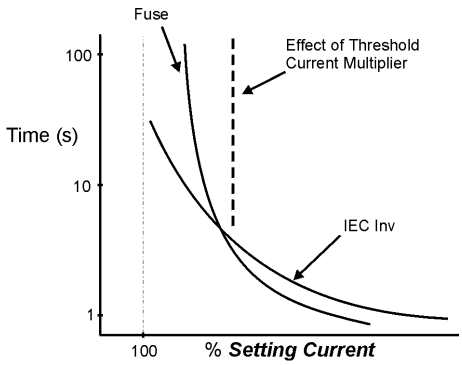

Figure 18: Co-ordination between fuse and IEC 255 inverse curve using the threshold current multiplier.

The figure opposite is an example of the effects on a composite curve due to an increase in the setting of the Threshold Current Multiplier.

Part A shows a composite curve which has an inverse time characteristic modified by Maximum Time and Instantaneous protection. Also shown in part A is an example of 3 different levels of Threshold Current Multiplier, settings: 1, 2 and 3.

Parts B, C and D are the curves resulting from the Threshold Current Multiplier settings 1, 2, and 3.

Threshold Current has a significant effect on the protection characteristics and at any one time is determined by the:

- “PROTECTION SETTINGS 1 (A....J):Phase/ Earth Threshold” page
- Cold Load Pickup. See "Single Shot Mode" (page 54)
- Inrush Restraint. See "Lockout Conditions" (page 53)

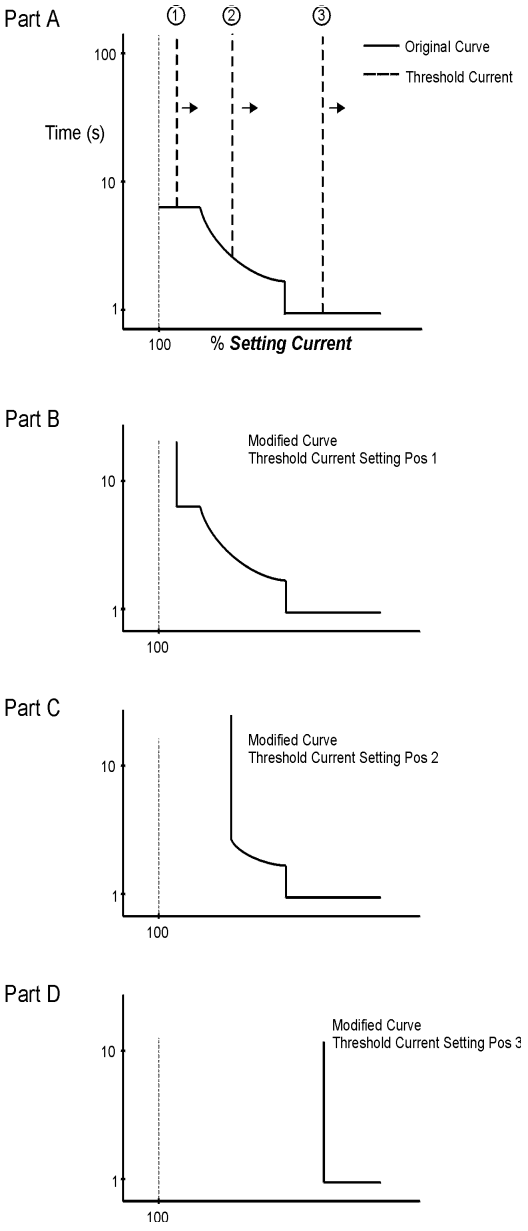

Figure 19: Composite curve changes due to different settings of threshold current multiplier.

a. When instantaneous only protection parameters are selected, Minimum Time To Trip and the Threshold multipliers apply but the Additional and Maximum times to trip do not.

Definite Time Protection

This is available on phase and earth protection as an **alternative** to inverse time Protection. Definite Time trips the circuit breaker at a fixed time after pickup. The Threshold Multipliers (phase, earth, NPS, inrush and cold load), as well as the Minimum, Additional and Maximum times do not apply.

Sensitive Earth Fault (SEF)

Sensitive Earth Fault (SEF) can be set up to be either available or not available and is a password protected feature located in:

SYSTEM STATUS-OPTIONS 1:SEF Available

This allows the engineer to ensure that SEF cannot be turned on at inappropriate locations.

If SEF is available then the operator can turn it on and off from

SYSTEM STATUS-OPERATOR SETTINGS 1

without a password, by cycling between the following three settings:

- E/F OFF, SEF OFF - Earth Fault off and SEF off.
- E/F ON, SEF OFF - Earth Fault on and SEF off.
- E/F ON, SEF ON - Earth Fault on and SEF on.

E/F OFF will not be available if E/F OFF is set to Not Allowed. SEF operates as an additional definite time element. The Threshold Current Multipliers, and Minimum, Additional, Maximum Times do not apply. See "Earth Fault Control" (page 42)

SEF will cause the circuit breaker to trip when the earth current rises above the SEF trip current setting for longer than the SEF definite time setting. The SEF definite time setting can be set differently for each trip in a reclose sequence.

Loss Of Phase Protection

Loss Of Phase (LOP) protection will immediately trip the circuit breaker and set lockout if phase/earth voltage on one or two phases falls below a user defined Loss Of Phase voltage threshold for longer than a user defined Loss Of Phase time.

LOP Protection can be set as follows:

- LOP Off - No action will occur on LOP.
- LOP On - LOP Protection is active and the ACR will trip if LOP is detected.
- LOP Alarm - LOP Protection is active, but the ACR will not trip if LOP is detected. Instead an alarm is registered in the Event Log, via a SCADA protocol or via an IOEX output.

Loss Of Phase protection can be configured:

PROTECTION SETTING 4 ('A...J'):Loss Phase Prot ON/OFF/Alm

In addition, LOP protection will cause a circuit breaker on a de-energised feeder to trip and lockout after the Loss of Phase time should only one or two phases be re-energised.

When LOP protection trips the recloser the phase or phases which caused the trip will be logged in the event record.

Under and Over Frequency Protection (CAPM 5 only)

Frequency Measurement

Frequency is measured using successive zero crossings of the U1 Terminal Phase to Earth voltage. The voltage signal is first passed through a Low Pass Filter to remove harmonics.

The measured frequency is displayed on the Measurement Pages. See Appendix F (page 133).

A typical measurement display looks like this:

```
- - - - - - SYSTEM MEASUREMENTS - - - - M
Frequency 50.6 Hz  - - Power - - - -  2479kW
- - - - - - - - - - - VARs- - - - - 200kVAR
                      Power Factor- -  0.93
```

The frequency value is updated every 0.5 seconds and averaged over 2.0 seconds. The displayed value is the measured frequency and is valid whenever the voltage on the U1 Terminal is above or equal to the Low Voltage Inhibit Threshold (LVIT).

When the voltage of the U1 Terminal is below the LVIT the display will show "Freq Unavailable" like this

```
- - - - - - SYSTEM MEASUREMENTS - - - - M
Freq Unavailable - - - Power - - - -  2479kW
- - - - - - - - - - - VARs- - - - - 200kVAR
                      Power Factor- -  0.93
```

Under/Over Frequency Tripping

When the measured frequency equals or exceeds the under or over frequency trip threshold an Under or Over Frequency Pickup event is generated and a Trip Delay Counter (TDC) is started.

The Trip Delay Counter is reset and an Under or Over Frequency Reset event is generated each time the measured frequency equals or goes below the threshold plus the dead band for any period of time. The Frequency dead band is used to prevent a frequency value that is fluctuating around the threshold from causing excessive pickup/reset events.

If the frequency remains equal to or greater than the Under or Over Frequency Threshold for the specified number of cycles, the TDC counts out and an Under or Over Frequency Trip event is generated and a Trip Request is issued.

Figure 20 (page 50) shows the method of Tripping and “Normal Frequency Closing” for Over Frequency. The same method applies to Under Frequency only mirrored about the Nominal frequency axis.

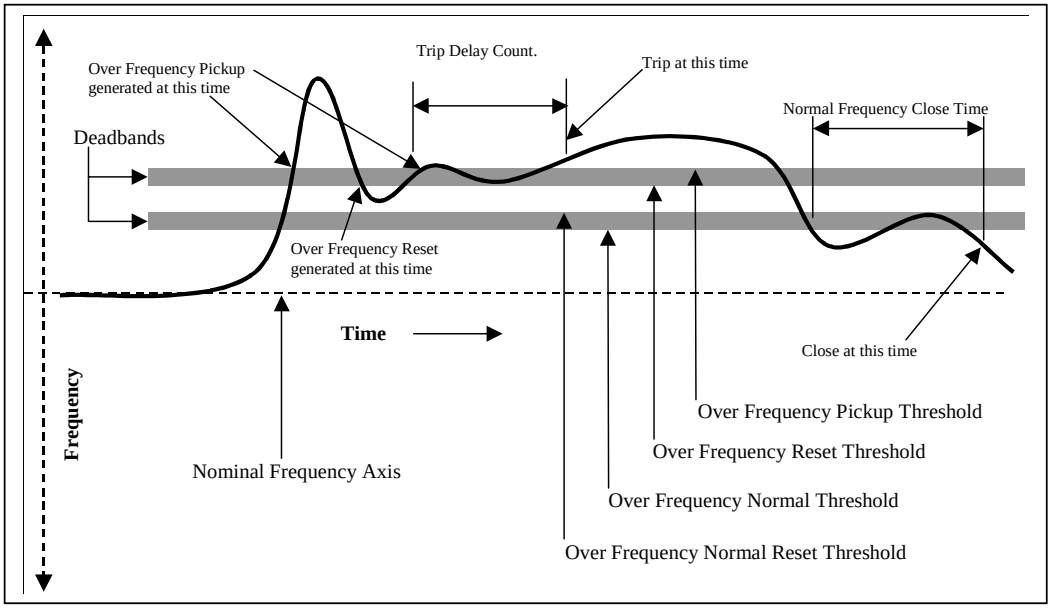

Figure 20: Over Frequency Detection

If the “Normal Frequency Close” function is switched OFF a “Lockout” event is generated after the trip and the Operator Settings Display shows a “Lockout” Status.

Auto-Reclose does NOT occur after an Under or Over Frequency Trip.

Normal Frequency Close

The “Normal Frequency Close” function closes the ACR automatically after an Under or Over Frequency trip when the frequency has returned to normal. For this function to work, the source side must be connected to the U1 Terminal.

The automatic close occurs when:

- The ACR tripped due to Under or Over Frequency Protection.
- “Normal Frequency Close” was ON before the trip occurred and is still ON.
- The frequency has returned to be less than or equal to the Frequency Normal threshold and remained less than this threshold plus the dead band ***AND*** the voltage on all three source side bushings has remained ***above*** the LVIT, for the “Normal Frequency Close Time”.

The Normal Frequency Close Timing is aborted every time that the frequency exceeds the Normal Frequency threshold plus the dead band or the voltage on any of the three source side bushings has fallen equal to or below the LVIT.

A “Lockout” event is ***not*** generated when a Normal Frequency Close is ON and the ACR trips on Under or Over Frequency Protection.

- The Operator Settings display does not show “Lockout”. It remains blank.

Whilst waiting for the frequency to return to normal, a special title will be flashing on the top line of the operator display

```
ACR will auto-reclose when frequency normal
```

When the frequency returns to normal status the flashing title becomes:

The “XXXX” denotes the period of time remaining before closing occurs. In the final 10 seconds

```
Freq Normal-ACR will close in xxxx secs
```

before actually closing the panel will “beep” to warn the operator.

The Normal Frequency Close ON/OFF setting may be controlled either via telemetry protocol or the configuration page.

A “Lockout” event will be generated if any of the following occur whilst the controller is waiting for the frequency to become normal:

- Normal Frequency Close is turned OFF.
- Under Frequency Normal setting is changed.
- Over Frequency Normal setting is changed.
- Normal Frequency Close setting is changed.
- Low Voltage Inhibit Threshold setting is changed.

The Operator Settings page will display “Lockout” and the special titles will be removed if any of the above occur.

Configuration

This section details the Under / Over Frequency configuration pages on the Operator Control panel display. They are displayed on

PROTECTION-UNDER/OVER FREQUENCY PROTECTION

within the Protection display group.

Two configuration pages are available within the group.

Configuration Page One

The default settings at this page are displayed at the right:

```
 - - - - UNDER/OVERFREQUENCYPROTECTION 1  -P
U/F Trip        OFF        O/FTrip          OFF
U/F Trip at     49.0Hz     after         4cycles
O/F Trip at     52.0Hz     after        50cycles
```

The following table explains each of the above settings.

UNDER / OVER FREQUENCY PROTECTION 1	
Field	**Explanation**
U / F Trip ON/OFF	This field allows the Under Frequency protection to be enabled (ON) or disabled (OFF). Under Frequency tripping will not occur whilst set to OFF.
U / F Trip at 49.0Hz	The frequency value at and below which an Under Frequency Pickup will occur.
After 4 cycles	The number of continuous cycles at and below the Under Frequency Threshold required before an Under Frequency Trip will occur. Maximum 1000 – Minimum 2
O / F Trip ON/OFF	This field allows the Over Frequency protection to be enabled (ON) or disabled (OFF). Over Frequency tripping will not occur whilst set to OFF.
O / F Trip at 52.0Hz	The frequency value at and above which an Over Frequency Pickup will occur.
After 50 cycles	The number of continuous cycles at and above the Over Frequency Threshold required before an Over Frequency Trip will occur. Maximum 1000 – Minimum 2

Under/Over Frequency Protection 1 field descriptions

Configuration Page Two

The default settings at this page are displayed as shownat right:.The following table explains each of the settings

:

```
 - - - - UNDER/OVER FREQUENCY PROTECTION 2 P
U/F    Normal    49.5Hz    O/F Normal    50.5Hz
Low V Inhibit 5000V
Normal Freq Close OFF
```

UNDER / OVER FREQUENCY PROTECTION 2	
Field	**Explanation**
U / F Normal 49.5Hz	The frequency at or **above** which the Frequency is deemed to be Normal. Maximum 65Hz – Minimum 45Hz
O / F Normal 50.5Hz	The frequency at or **below** which the Frequency is deemed to be Normal. Maximum 65Hz – Minimum 45Hz
Low V Inhibit	The voltage at or below which the Under / Over Frequency protection will be disabled. Maximum 15kV – Minimum 2 kV
Normal Freq Close ON/OFF	This field controls the use of the Normal Frequency Close feature.
After 60 secs	The time that the source voltage must have returned to normal before auto closing takes place. Maximum 1000 – Minimum 1 seconds

Under/Over Frequency Protection 2 field descriptions

Live Load Blocking

When

PROTECTION SETTING 3 (A...J):Live Load Block ON

is selected, all close requests will be disregarded if any load side terminal is live.

Live Load Blocking is selected from:

PROTECTION SETTING 3 (A...J):Live Load Block OFF/ ON

Live Load Blocking uses the Live Terminal Threshold set on:

SYSTEM STATUS-PHASE VOLTAGE and POWER FLOW:"LIVE" if 2000V

Auto-Reclose

When

SYSTEM STATUS-OPERATOR SETTINGS 1:Auto-Reclose ON

is selected, the controller will automatically reclose following a protection trip.

The user set delay between trip and reclose is called the reclose time and can be set differently for each trip in a sequence. If the fault persists the circuit breaker will trip again under protection. This will happen a number of times, until the fault is cleared or the protection relay reaches the end of the defined reclose sequence. At this point the circuit breaker remains open and will not reclose automatically. This is known as lockout and the circuit breaker can only be closed by local or remote operator command, which clears the lockout condition.

If

SYSTEM STATUS-OPERATOR SETTINGS 1:Auto-Reclose OFF

When Auto-Reclose is off then no reclose takes place and the controller goes directly to lockout after a protection trip. See "Single Shot Mode" (page 54)

To control the number of trips in a reclose sequence, three parameters must be set:

- The total protection trips to lockout.
- The number of SEF trips to lockout (if SEF is available).
- The number of NPS trips to lockout (if NPS is on).

All protection trips in a sequence (including SEF) increment a Protection Trip Counter (PTC**)** which causes the protection to go to lockout once the "*total protection trips to lockout"* value is reached. SEF trips anywhere in a sequence increment a different counter which causes the protection to go to lockout once the "*number of* SEF *trips to lockout"* value is reached.

For example, protection can be set for 4 "*total protection trips to lockout"* and 2 "SEF *trips to lockout"*. This would mean that if any two trips in a sequence were SEF trips then the protection will go to lockout. If "*number of* SEF *Trips to lockout"* is set to 1 then an SEF trip anywhere in the sequence will cause lockout.

Similarly NPS protection trips, anywhere in a sequence, also increment a different counter which causes the protection to go to Lockout once

the “number of NPS trips to Lockout” value is exceeded.

Lockout occurs when any one of the counters expires.

Be aware that it is the PTC that determines which set of protection settings is in force, not the SEF or NPS trip counters. If, for example, the third trip in the sequence is the second SEF trip, the circuit breaker will have operated on the settings of “earth protection trip number 3”.

The bottom left field on the

SYSTEM STATUS-OPERATOR SETTINGS 1

page shows what is happening during a reclose sequence.

The display is normally blank when the circuit breaker is closed but when a reclose sequence is in progress it shows “Reclose 1”after the first reclose, “Reclose 2”after the second reclose etc. In other words, this display shows the status of the protection trip counter.

When the circuit breaker is open and the protection is in lockout it shows “lockout". When the circuit breaker is closed by an operator the display blanks to show that lockout is cleared. This display is very useful when performing current injection testing.

Sequence Reset

A Sequence Reset Timer is used to reset the reclose sequence counters to zero so the next fault starts again at Trip 1. It starts timing when the circuit breaker is closed automatically. This means the sequence reset time usually starts at the end of the reclose time after an Auto-Reclose.

However, if the fault is still present the protection will pick-up again and hold the sequence reset timer at zero. The timer restarts when the fault has been cleared. The sequence reset timer “expires” when it reaches the user set sequence reset time. A ‘Sequence Reset’ event is then logged.

The Sequence Reset Time (also known as Reclaim Time) is set on:

PROTECTION SETTING 2 (A...J):Seq Reset Time 30s

Lockout Conditions

Lockout is set by any kind of manual trip, either by using the TRIP button on the operator control panel, the mechanical trip lever on the side of the circuit breaker or by remote operator trip.

Lockout will also occur after the following events:

- NPS protection trips to Lockout.
- After a trip, when the controller is in Single Shot mode. See "Single Shot Mode" (page 54).
- After a trip, when the Work Tag is applied.
- When the protection trip counter reaches the preset number of trips in Auto-Reclose Mode.
- When the SEF trip number reaches the preset number of SEF trips in Auto-Reclose Mode.
- When the NPS trip number reaches the preset number of NPS trips in Auto-Reclose Mode.
- When High Current Lockout has occurred. See "High Current Lockout" (page 53).
- Loss of Phase protection trip.
- Under/Over Frequency[1] protection trip. See "Normal Frequency Close" (page 50).
- After a trip when controller is in low power mode.
- Mechanism failed in an open position.

High Current Lockout

If a trip occurs and the measured maximum fault current exceeds the “High Current Lockout” setting, the controller goes directly to lockout and will not reclose. A High Current Lockout will only occur when the setting is equal to, or higher than, the Phase Pickup Current.

High Current Lockout is enabled on:

PROTECTION SETTING 4 (A...J):High Current Lockout OFF/ON

and only applies during the preset

PROTECTION SETTING 4 (A...J):Activation Trip 1

or one of the subsequent trips in a sequence.

High Current Lockout can occur when Single Shot Mode is active or when closing onto a fault by an operator. In both of these situations the controller would have gone to lockout anyway without high current lockout being triggered. The difference is that if High Current Lockout was triggered an event will be recorded in the event log as extra information for fault analysis.

Low Gas Lockout

This protection function is selectable via:

SYSTEM STATUS-OPTIONS 1:Gas Low Lockout ON/OFF

When switched ON, this feature disables the switch mechanism if the gas pressure in the switch tank becomes lower than the pre-set limit by blocking **any** Trip or Close signals from the controller.

1. This is a CAPM 5 feature only

Dead Lockout

This protection function may be selected via:

SYSTEM STATUS-OPTIONS 2:Dead Lockout ON/OFF

When Dead Lockout is ON the circuit breaker will not re-close unless one or more of the source side or load side terminals are live. If all the terminals are dead then the controller goes to lockout.

Single Shot Mode

Single Shot Mode is used to provide an appropriate protection curve when non-reclosing operation is required, for example, when closing onto a fault.

In Single Shot Mode the controller goes directly to lockout after one trip and will not Auto-Reclose.

Single Shot Mode is *activated* when:

- Auto-Reclose is turned off, and Work Tag is not applied.
- The circuit breaker is closed by operator command irrespective of the state of Auto-Reclose.

Single Shot Mode is *de-activated* when:

- Auto-Reclose is turned back on,
- Work Tag is not active, and the Single Shot Timer expires without a protection pickup occurring (see below).

When Single Shot Mode is active, it is displayed in

SYSTEM STATUS-OPERATOR SETTINGS 1:Single Shot Active

The Earth, NPS and Phase Single Shot Protection trip settings can be selected individually via separate protection pages. Each page is similar to the normal protection trip page.

When Single Shot Mode is active the values set on the relevant Earth/Phase/NPS protection page are used.

When Single Shot Mode de-activates, protection reverts to the fully programmed sequence.[1]

A trip in Single Shot Mode generates a ‘single shot’ event, preceded by the Active Protection Group and the type of Protection trip. The Single Shot reset time is set at:

PROTECTION SETTING 2 (A...J)

Single Shot Timer

This timer starts when the circuit breaker closes and runs for the preset number of seconds:.

PROTECTION SETTING 2 (A...J):SS Reset Time 1s

This may be disabled by setting the Single Shot reset time to zero.

Single Shot remains active while the timer is counting i.e.; a protection trip will result in a lockout without reclosing. The “time to trip setting” may be longer than the Single Shot Reset Time.

If a protection pickup occurs whilst timing, the timer is reset to zero and held there while pickup is active. A protection reset will restart the timer provided it has not already timed out.

When set to zero, auto-reclosing will **always** be enabled while the operator command:

SYSTEM STATUS-OPERATOR SETTINGS 1:Auto-Reclose ON

is set. This means that Single Shot Mode does not activate after an operator or automation close command.

Inrush Restraint

When closing onto a typical load there is always a short lived inrush current caused by, for example, transformer magnetisation currents, low resistance lamp filaments and motors starting. The purpose of Inrush Restraint is to prevent the circuit breaker from tripping when inrush current occurs.

Inrush restraint works by raising the phase and earth Threshold Currents for a short period of time to allow the inrush to flow. The inrush time and multiplier settings are specified on:

PROTECTION SETTING 5 (A...J)

Typical values would be 200ms with a multiplier of 5.

Inrush Restraint is **armed** for operation whenever the load current goes to zero (zero current is defined as all three phase currents less than 2.5 Amp). For example, when the load is dropped either by the circuit breaker itself, or by an upstream or downstream circuit breaker.

When the load current at a later time becomes non-zero (either through the circuit breaker being closed or some upstream or downstream device being closed) the Inrush Restraint is **activated** and the Inrush Multiplier is used in place of the Threshold Current Multiplier for the required time.

When cold load pickup is turned on the multiplier used for inrush will always be the higher of the Inrush Multiplier and the Cold Load Multiplier.

Inrush Restraint affects Phase, earth and NPS protection, but does not apply to Definite Time or SEF.

1. The circuit breaker can be closed or Auto-Reclose can be turned on/off by a number of sources (from the Control Panel, by a telemetry command, by WSOS command or by IOEX command). Single Shot is activated/de-activated irrespective of the source of the control.

If normal currents are expected to drop below 2.5A then Inrush Restraint cannot be used. In this case Inrush Restraint should be turned off.

Inrush Restraint parameters are set on:

PROTECTION SETTING 5 (A...J)

For Inrush Restraint to be effective, the Inrush Multiplier must be larger than the Threshold Current Multiplier.The figure opposite shows an example of the inrush settings applied to an inverse curve. In this example, the Threshold Current Multiplier is set to x1.1, the Instantaneous Multiplier is set to x10, the Inrush Multiplier is set to x5 and the Inrush Time is set to 0.5 second. After a close, for the first 0.5 second, the Threshold Current increases to 5 times "setting current". It then drops back to the original setting of 1.1 times the setting current once the Inrush Time is complete.

Under these circumstances the instantaneous trip current value does not change. If, on the other hand, the Instantaneous Multiplier was set to x4 then during the Inrush Time an instantaneous trip would not have occurred until the line current exceeded 5 times the setting current.

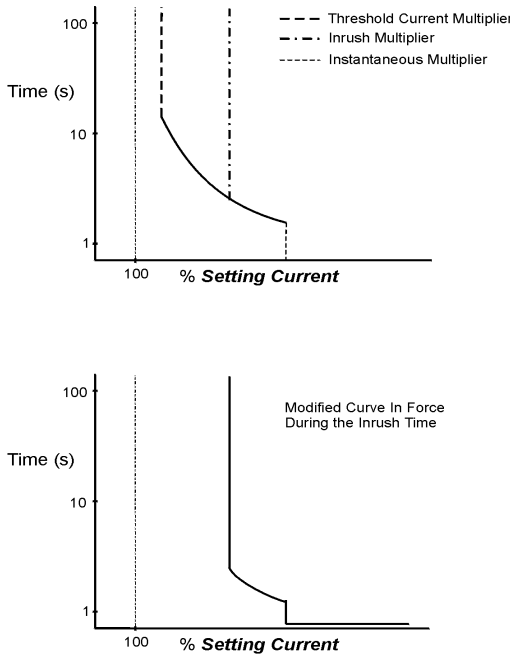

Figure 21: Effect of inrush current settings on a protection curve

Cold Load Pickup (CLP)

When a typical load has been without supply for a period of time (hours) it loses its diversity.

When power is restored the load is higher than usual because all the heater, refrigerator or air conditioner thermostats have turned on. The longer the period without supply the greater the loss of diversity and the higher the load current when supply is restored.

The purpose of the Cold Load Pickup feature is to allow for this loss of diversity automatically and hold the load without tripping. It works by timing the loss of supply to the load and then raising the threshold current accordingly.

The user specifies a multiplier and a time. The controller detects when load current is zero (see Inrush Restraint) and starts a timer called the Operational Cold Load Time. Using this timer, an Operational Cold Load Multiplier is calculated using the following formula:

$$\text{Operational Cold Load Mult'} = 1 + \left[\frac{\text{Operational Cold Load Time}}{\text{User Set Cold Load Time}} \text{ x } (\text{User Set Cold Load Mult'} - 1) \right]$$

The Operational Cold Load Multiplier is used to modify the phase and earth Threshold Current Multipliers.

Therefore the phase and earth protection thresholds will increase at a rate specified by the customer when the load is turned off – but only up to the User Set Cold Load Multiplier. The controller calculates the new thresholds every minute.

For example, if the User Set Cold Load Time is 2 hours, the User Set Cold Load Multiplier is x2 and the current has been off for 1 hour, then the Operational Cold Load Time is 1 hour. Consequently the phase and earth thresholds are increased to equal the Operational Cold Load Multiplier of 1.5.

Once load current is restored the Operational Cold Load Timer starts to count down. This means that the Operational Cold Load Multiplier reduces back to 1 and hence the phase and earth threshold currents also reduce back to their values. Note that the rate of increase and decrease of threshold currents is the same.

In this way, lost load diversity is automatically compensated for. It doesn't matter where the current was turned off (e.g. at the substation or at the recloser) the compensation will still work.

- The User Set Cold Load Time and the User Set Cold Load Multiplier are set on:

PROTECTION SETTING 5 (A...J)

- The Operational Cold Load Multiplier will not go above the user set Cold Load Multiplier or below the user set thresholds on:

PROTECTION SETTING 1 (A...J)

- On power up the load is assumed to be diverse, i.e. the Operational Cold Load Time is zeroed and “Cold Load IDLE” will be displayed.
- Cold Load affects phase and earth protection thresholds including instantaneous but not SEF.
- High Current Lockout and Definite Time settings are not affected.
- Cold Load Pickup cannot be used if normal currents are expected to drop below 2.5A and should be turned off.

Cold Load Pickup Example

The figure opposite is an example of the Cold Load settings applied to an inverse curve. In this example, the Threshold Current Multiplier is set to x1.1, the Instantaneous Multiplier is set to x1.75, the Cold Load Multiplier is set to x2 and the Cold Load time is set to 2 hours.

Part A indicates how the Current Multiplier will vary according to the length of time the line current is turned off and then restored.

Part B indicates the original protection curve.

Part C indicates the protection curve that is constructed for use when the line current is first restored and the Current Multiplier corresponds to 2 times the setting current. Note that in this case an Instantaneous Trip will not occur until the line current exceeds 2 times the “setting current”.

Part D indicates the protection curve that is constructed for use when the line current has been restored for 1 hour. This corresponds to a Current Multiplier of 1.5 times the setting current. Note that an Instantaneous Trip will now occur at the set value of 1.75 times the setting current. After the power has been restored for 1.8 hours the Cold Load Multiplier will revert back to the original Threshold Multiplier settings and the protection curve will be as in Part B.

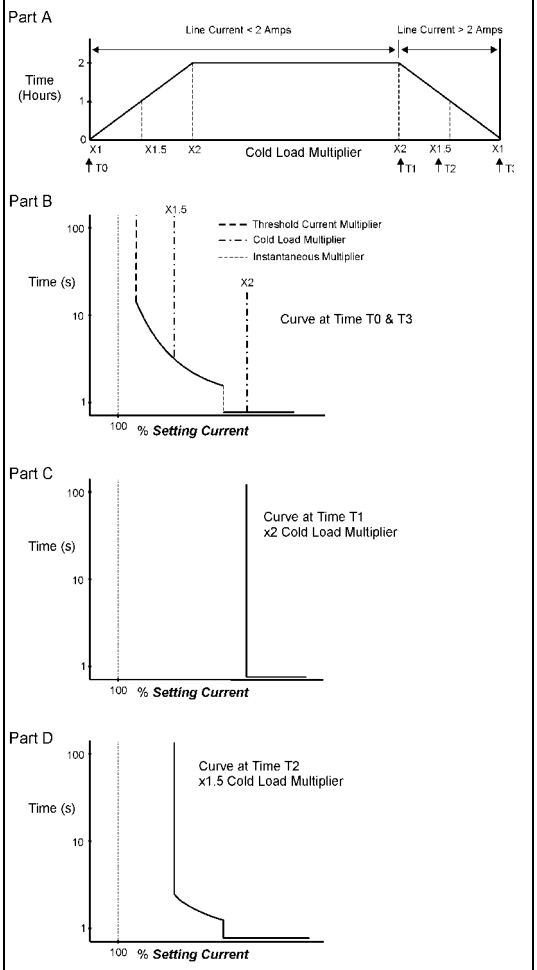

Figure 22: Cold Load multiplier (CLM) settings applied to protection curves

Cold Load Pickup Status Display

The operational status of the cold load pickup is shown in:

SYSTEM STATUS-OPERATOR SETTINGS 2:Cold Load

This can show the following states:

- Cold Load OFF: Cold load pickup has been configured OFF in the currently active protection group, no operator control of Cold Load Pickup is possible.
- Cold Load IDLE: Cold Load Pickup is configured ON but Cold Load Pickup is not affecting the thresholds. This is probably because the load current is on and the Operational Cold Load Time is zero. This is the normal condition.
- Cold Load NO CHANGE.
- Cold Load MAX.
- **CLP 60min X1.5mult (for example).** The display shows the Operational Cold Load Time and Multiplier. This affects the protection thresholds. In this example the Operational Cold Load Time is 60mins and the Multiplier is 1.5.

Operator Control of Cold Load Pickup

When Cold Load Pickup is configured ON at the currently active protection group it can be further controlled by using **SELECT**, and the ⮜ ⮞ keys.

SELECT, and the ⮜ ⮞ keys enable the following:

- Zero the Operational Cold Load Time. Note that if the load current is off the Operational Cold Load Time will start to increase.
- Set the Operational Cold Load Time and Multiplier to a desired value. Note that the Operational Cold Load Time will then increase or decrease depending on whether the load current is OFF or ON.

Sequence Control

Sequence control causes the circuit breaker to step to the next count in the reclose sequence on reset of all protection elements whether or not the circuit breaker tripped. The sequence will only advance if Auto Reclose is on and the Single Shot Timer has timed out.

Consider a situation where there are two circuit breakers in a feeder. Both are programmed for fast tripping on the first trip and slow tripping on the second trip in order to co-ordinate with fuses on the spur lines. Suppose there is a fault downstream of the second circuit breaker which is big enough to be picked up by the first circuit breaker as well. The circuit breaker closest to the fault trips, steps onto the second set of protection settings which is a slow trip and then recloses. If the fault has not been cleared the circuit breaker nearest to the substation is still on its fast trip settings and will now trip. This situation would result in unnecessary loss of supply to the load connected to the first recloser.

This problem is overcome by setting Sequence control on in the circuit breaker nearest to the primary substation. When Sequence control is on, the circuit breaker steps onto the next stage in the protection trip sequence after it has seen a fault whether it tripped or not. In this way an upstream circuit breaker will keep its sequence co-ordinated with a downstream circuit breaker. If the fault is cleared the trip count will reset back to zero after the sequence reset time in the normal way.

The SEF counter is also coordinated with the downstream circuit breaker and will increment if its element has picked up.

Automatic Protection Group Selection

Sometimes a circuit breaker is used at a location in a supply network where the power flow can be in either direction depending on the configuration of the rest of the network.

One example of this is a network tie point where the operator may have to select a different group of protection settings to compensate for a change in power flow when changing the network configuration. Emergency switching configurations may require more than one pair of Protection Groups.

Enabling Automatic Selection

Automatic Protection Group Selection (APGS) allows the appropriate Protection Group to be selected automatically without the need for operator intervention. It works by automatically changing between Protection Groups depending on the direction of power flow.

- APGS is made available by setting:

SYSTEM STATUS-OPTIONS 3:APGS Allowed

- Either the Primary or Alternate Group required is selected.
- APGS is then enabled by selecting:

SYSTEM STATUS-OPERATOR SETTINGS 1:Protection Auto

- The operator display will indicate the currently active set by displaying::

SYSTEM STATUS-OPERATOR SETTINGS 1:Auto “A” to “J” Active

On power down, the controller saves the current status of Protection Auto and uses that status to determine the active Protection Group on power up.

Disabling Automatic Selection

APGS is turned OFF (disabled) either by:

- A change of power flow configuration.
- Selecting a Protection Group other than

SYSTEM STATUS-OPERATOR SETTINGS 1:Protection Auto

- Setting:

SYSTEM STATUS-OPTIONS 3:APGS Not Allowed

- This feature is not the same as Directional Blocking. See Section 10 (page 59).

Selection Rules

When the APGS feature is enabled, the active Protection Group is automatically selected in accordance with the following rules:

- There may be a maximum of five pairs of APGS Protection Groups: A&B, C&D, E&F, G&H and I&J. Each pair comprises a Primary Protection Group and Alternate Protection Group respectively.
- The number of APGS pairs depends on how many protection sets are selected to be available. Where an odd number of Protection Groups have been selected the last group does not participate in APGS. Protection Auto can not be selected if this last group is active.
- When the power flow is in the **positive** direction (source to load) Primary Protection Group A, C, E, G or I is used.
- When the power flow is in the **negative** direction (load to source) Alternate Protection Group B, D, F, H or J is used.
- For APGS to generate a change, from Primary to Alternate Protection Group, the power flow must be greater than 50kW in the **negative** direction (load to source) for longer than the period set on

  SYSTEM STATUS-OPTIONS 3:Auto Change Time 60s

- To revert to the Primary Protection Group the power flow must be greater than 50 kW in the **positive** direction (source to load) for longer than the period set on

  SYSTEM STATUS-OPTIONS 3:APGS Not Allowed

Fail to Operate Under Protection

If the circuit breaker fails to trip under protection, a ‘mechanism fail’ will be logged in the event record and no further trip attempts will occur until all the protection elements have reset. When the next pickup/protection trip sequence occurs the circuit breaker will then attempt another trip.

If the recloser fails to Auto Reclose then the relay goes to lockout.

10 Directional Blocking

Directional blocking is an *optional* protection feature that restricts tripping on faults to a designated side of the circuit breaker. If this option is not available on your controller, contact your distributor.

Radial systems use Directional Blocking to prevent nuisance tripping if particular network conditions are causing “false” earth faults. In this case directional blocking can prevent nuisance tripping by blocking faults in the source direction and only responding to faults in the load direction.

Directional blocking can also be used in simple interconnected systems such as a tie line. In this case a mid-point ACR is set to trip in one direction only, allowing improved coordination with the circuit breakers at each end of the tie.

- Directional blocking is not suitable where the coordination of multiple devices within an interconnected network is required.

Characteristic Angle and Fault Regions

The phasor diagram below shows power flow from Source to Load with time rotating clockwise.

A characteristic angle of zero sets the forward fault region to be on the designated LOAD side of the circuit breaker and the reverse fault region to be on the designated SOURCE side of the circuit breaker when the fault voltage and current are in phase[1]. This is explained in more detail in the sections below.

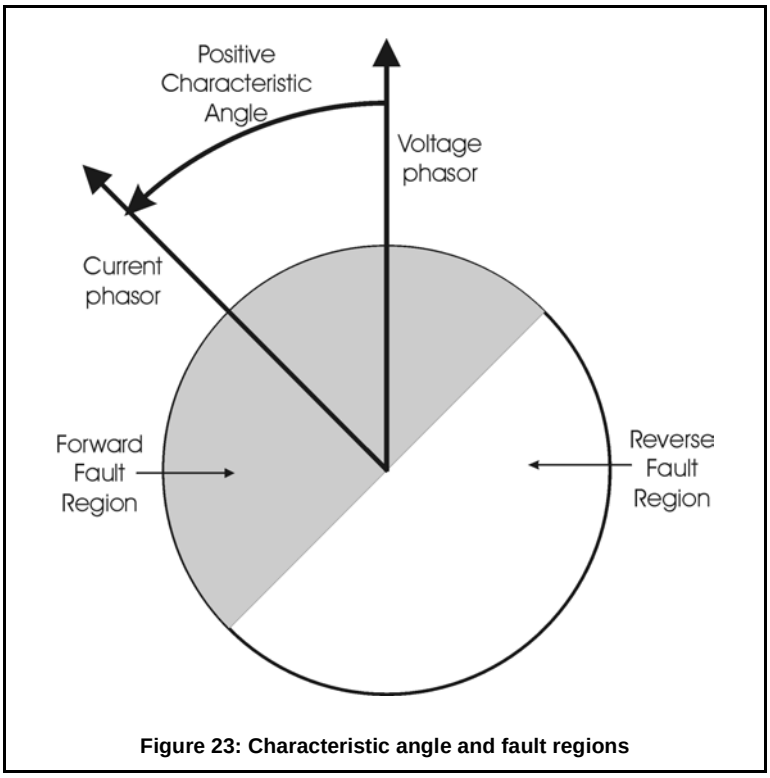

Figure 23: Characteristic angle and fault regions

The user sets the characteristic angle to define the forward and reverse fault regions for the network and then determines in which region the protection is going to trip or block.

Network characteristic angles are set separately for Phase and Earth faults. Tripping/Blocking directions are set separately for Phase, Earth and SEF Protection. See "Parameters to be Configured" (page 65) for details of setting up directional blocking.

Phase Directional Blocking

When a phase overcurrent protection picks up, the controller measures the total power flow through the ACR (i.e. the power flow into the fault) and from the direction of the power flow determines the direction of the fault.

Therefore setting the characteristic angle to match the fault characteristic angle (e.g. 45 deg) ensures that the fault forward direction is on the load side of the circuit breaker. The characteristic angle is set using the

Directional Blocking 2: Phase Characteristic Angle 45 Deg

parameter.

The characteristic angle of the fault is determined by the network characteristics (line resistance and

1. SOURCE and LOAD terminals are designated at time of installation. See Section 12 (page 69)

reactance) and the fault characteristics (such as the nature of the short-circuit, solid or arcing).

For typical medium voltage distribution networks the Phase Characteristic Angle will be approximately 45 deg to 85 deg.[1]

If directional blocking is selected for the faulted direction, then the protection is blocked and no trip takes place. If tripping is enabled then the trip takes place as normal.

The direction is selected on:

Directional Blocking 1: Phase Trip Fwd

This parameter can be set for forward tripping, reverse tripping or both forward and reverse tripping (i.e. non-directional).

Determining the direction requires 30 milliseconds and takes place concurrently with the protection timing. This results in a minimum time of 30 milliseconds for directional protection. Of course only the fastest trips are affected by this minimum time.

The controller needs a polarising voltage of at least 500V phase/earth on the faulted phases to determine the direction of the fault. If there is a bolted phase fault on the terminals of the ACR there may not be sufficient voltage. In this case whether the trip is blocked or armed is determined by

Directional Blocking 1: Low V Block ON

Setting Low V Block ON will block trips for low voltages, setting Low V Block OFF will trip for faults in either direction irrespective of the direction if the voltage is low.

Earth/SEF Directional Blocking

Earth and SEF protection operate in a similar manner to phase directional protection, except that the fault direction is determined using earth current and residual earth voltage Vo (this is the phasor sum of the three line/earth voltages).

Consider the phasor diagrams in Figure 24: (page 60) for a earthed neutral system with a single resistive phase to earth fault on the A-phase.

The voltage on the A-phase is reduced and the residual voltage phasor is as shown. The current in the A-phase is increased and the residual phasor (earth current) is as shown.[2]

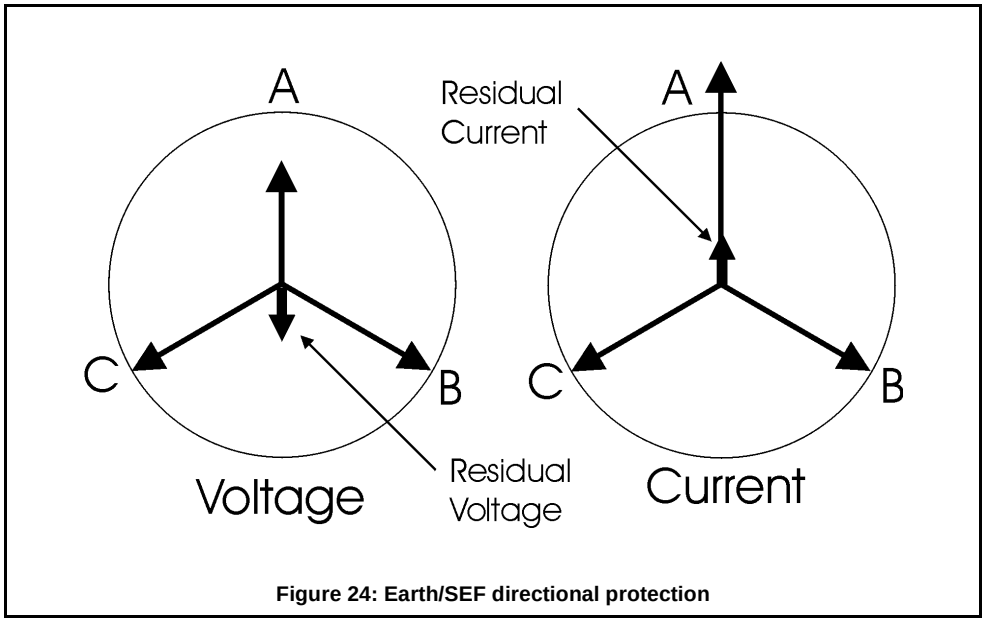

Figure 24: Earth/SEF directional protection

The characteristic angle of the earth fault is determined by the network characteristics (line resistance and reactance, neutral earthing arrangement) and the fault characteristics (such as the nature of the short-circuit - solid or arcing, fault impedance and earth resistance).

For typical medium voltage distribution networks the Earth Characteristic Angle will be approximately:[3]

- -135 deg to +135 deg for systems with solidly or resistively earthed neutrals.
- -90 deg for systems with unearthed neutrals.

The Earth and SEF elements can be independently set to trip for faults in the forward or reverse direction or in both directions on:

Directional Blocking 1

1. It is important to determine the actual phase characteristic angle for the network and set this parameter accordingly.
2. The characteristic angle of this hypothetical fault is 180 degrees, that is the current is 180 degrees out of phase with voltage. Therefore if this situation applied for single phase earthed faults in the network the earth characteristic angle would be set for -180 degrees using the {Directional Blocking 2: Earth Characteristic Angle -180 Deg} parameter.
3. It is important to determine the actual earth fault characteristic angle for the network and set this parameter accordingly.

For earth fault protection the direction is determined in 30 milliseconds provided the polarising residual earth voltage is at least:

Directional Blocking 3: Min Earth Vo 20%

of the nominal line/earth voltage. A bolted terminal earth fault will completely collapse the line/earth voltage on that phase and so cause the residual earth voltage to be the full system line/earth voltage.

For SEF protection the fault is likely to be of a high impedance and the residual earth voltage may be much lower, particularly in earthed neutral networks. For SEF protection the controller takes 500ms to determine the direction and will operate down to a residual earth voltage of:SEFof the

Directional Blocking 3:Min SEF Vo 5%

nominal line/earth voltage.

SEF trips will not be shorter than the 0.5 seconds taken to determine SEF direction.

Earth trips will not be delayed by the time taken to determine the SEF direction.

For both Earth and SEF protection, if the residual earth voltage is too low to determine fault direction then the trip is either blocked or armed depending on the corresponding setting of:

Directional Blocking 1: Low Vo Block ON

Setting Low Vo Block ON will block trips for low voltages, setting Low Vo Block OFF will trip for faults in either direction irrespective of the direction if the voltage is low.[1]

Earth Residual Voltage Balancing

Earth residual voltage is measured from the instantaneous sum of all three phase voltages. Even in unfaulted networks this voltage is not likely to be zero because the three phase voltages are not going to be perfectly balanced.

This could lead to problems in high impedance fault conditions. The residual voltage due the earth fault might be dominated by the out of balance phase voltages and this might lead to incorrect determination of direction.

To overcome this, automatic phase balancing is provided[2]. This feature continually balances the phase voltages under normal conditions and compensates for imbalance between the three voltage measurements. When balancing is enabled by setting:,

Directional Blocking 3:Vo Balancing Enabled

compensation for phase imbalances of up to 20% of the line/earth voltage will be applied. This allows correct determination of the direction of much lower level faults than would otherwise be possible. Balancing is disabled by setting:

Directional Blocking 3:Vo Balancing Disabled

It is expected that Residual Voltage Balancing is not used on unearthed networks.

When balancing is enabled the residual voltage is continually balanced at the rate of 0.6% of phase/ earth voltage per second. Balancing is paused when any of the following conditions occur:

- A fault is picked up.
- The SCEM data is not valid.
- The circuit breaker is open.
- Any of the bushings are dead.

When balancing is enabled the display shows “Vo Balancing” while the system is continually adjusting for balance, and “Vo Balance Paused” when the balancing is suspended for one of the reasons above. When balancing is disabled the display shows “Vo Balance Disabled”.

SEF Residual Voltage Alarm

The directional blocking facility includes detection of high residual voltage (Vo) above the

Directional Blocking 3:Min SEF Vo 5%

setting whether SEF protection has picked up or not. This is called the Residual Voltage alarm.

The alarm is set when Vo is sustained above the

Min SEF Vo 5%

threshold for longer than

Directional Blocking 3:High Vo alarm 5 sec

time and is cleared when Vo falls below the threshold again.

The alarm status is displayed on the operator control panel page

Directional Blocking 3:High Vo Alarm ON/OFF

and is available for transmission by telemetry protocols.

This indication can be useful in unearthed neutral networks for earth fault detection.[3]

1. The residual voltage Vo is not likely to be zero even in un-faulted networks.See "Earth Residual Voltage Balancing" (page 61)
2. This feature is the subject of a patent application.
3. The Residual Voltage Alarm is affected by the voltage balancing described in "Earth Residual Voltage Balancing" (page 61) and it is expected that Residual Voltage Balancing is disabled if the Residual Voltage Alarm is used.

Event Record

When the controller first resolves the fault direction an armed or blocked event is logged in the event record. The controller then continues to resolve the direction for the duration of the fault. Each time the direction changes another event is written. For all protection elements that pickup a separate event is written. The fault current maximum events are recorded in the normal way when the protection resets.

In the case of an earth or SEF pickup an event is logged to record the value of Vo at the time of the maximum earth current.

The Directional Blocking events are listed in the table below. These events only occur when Directional Blocking is ON.

Event Text	Explanation
Earth Dir Arm	An earth protection pickup occurs and tripping is enabled in the faulted direction. The trip takes place as normal.
Earth Dir Block	An earth protection pickup occurs but tripping is blocked in the faulted direction. The recloser does not trip.
Earth Low Vo Arm	An earth protection pickup occurs and tripping is enabled because the residual voltage (Vo) is less than the user-specified level and Low Vo blocking is OFF. The trip takes place as normal.
Earth Low Vo Block	An earth protection pickup occurs and tripping is blocked because the residual voltage (Vo) is less than the user-specified level and Low Vo blocking is ON. The circuit breaker does not trip.
Phase Dir Arm	A phase overcurrent pickup occurs and tripping is enabled in the faulted direction. The trip takes place as normal.
Phase Dir Block	A phase overcurrent pickup occurs but tripping is blocked in the faulted direction. The circuit breaker does not trip.
Phase Low V Arm	A phase protection pickup occurs and tripping is enabled because the voltage on all three phases (V) is less than 500 V and Low V blocking is OFF. The trip takes place as normal.
Phase Low V Block	A phase protection pickup occurs and tripping is blocked because the voltage on all three phases (V) is less than 500 V and Low V blocking is ON. The circuit breaker does not trip.
SEF Dir Arm	A SEF pickup occurs and tripping is enabled in the faulted direction. The trip takes place as normal.
SEF Dir Block	A SEF pickup occurs but tripping is blocked in the faulted direction. The circuit breaker does not trip.
SEF Low Vo Arm	A SEF protection pickup occurs and tripping is enabled because the residual voltage (Vo) is less than the user-specified level and Low Vo blocking is OFF. The trip takes place as normal.
SEF Low Vo Block	A SEF protection pickup occurs and tripping is blocked because the residual voltage (Vo) is less than the user-specified level and Low Vo blocking is ON. The circuit breaker does not trip.
Vo 99999V	This event is generated to record the value of the residual voltage (Vo) at the time of the maximum earth or SEF current.

Configuration pages

This section shows each of the three Directional Blocking configuration pages on the Operator Control Panel display. These pages are in the Protection Settings Display Group following

Protection Setting 5 (A-J)

Note that

SYSTEM STATUS-OPTIONS 2:DIRB Available

must be set or the Directional Blocking page will not be available.

The top line of the display is the page title and the letter "**P**" to the right indicates that these pages are found in the Protection Display Group. The next three lines are the data on display.

Directional Blocking page 1A

This page has the general format:

```
 - - - - -DIRECTIONAL BLOCKING 1A  - - -  P
Phase:      Trip Fwd&Rev     Low V Block OFF
Earth:      Trip Fwd&Rev     Low V Block OFF
SEF  :      Trip Fwd&Rev     Low V Block OFF
```

The letter 'P' at the right of the display page heading indicates that the page is in the Protection Settings Display Group.

The actual contents of the data rows and the field descriptions are shown in the following tables.[1]

DIRECTIONAL BLOCKING 1A			P
Phase: Trip Fwd&Rev Phase: Trip Rev Phase: Trip Fwd	P	Low V Block OFF Low V Block ON	P
Earth: Trip Fwd&Rev Earth: Trip Rev Earth: Trip Fwd	P	Low Vo Block OFF Low Vo Block ON	P
SEF: Trip Fwd&Rev SEF: Trip Rev SEF: Trip Fwd	P	Low Vo Block OFF Low Vo Block ON	P

Field	Explanation
Phase: Trip Fwd Phase: Trip Rev Phase: Trip Fwd&Rev	Controls the tripping direction for Phase protection. *Default is Phase: Trip Fwd&Rev*
Earth:Trip Fwd Earth: Trip Rev Earth: Trip Fwd&Rev	Controls the tripping direction for Earth protection. *Default is* Earth*: Trip Fwd&Rev*
SEF: Trip Fwd SEF: Trip Rev SEF: Trip Fwd&Rev	Controls the tripping direction for SEF protection. *Default is SEF: Trip Fwd&Rev*
Phase: Low V Block OFF Phase: Low V Block ON	This field determines the action that will occur when the polarising phase/earth voltage is below 500V. When set to Low V Block ON all phase overcurrent trips will be blocked if the line-earth voltage is below 500 V on all three phases. If Low V Block OFF is set then the phase overcurrent faults will trip irrespective of direction if the line-earth voltage on all three phases is below 500 V. *Default is Phase: Low V Block OFF*
Earth: Low Vo Block OFF Earth: Low Vo Block ON	This field determines the action that will occur when the polarising residual voltage Vo voltage is less than the user-set minimum Vo. When set to Low Vo Block ON all Earth overcurrent trips will be blocked if the residual voltage is less than the user-set minimum Vo. If Low Vo Block OFF is set then the Earth overcurrent faults will trip irrespective of direction if the residual voltage is less than the user-set minimum. *Default is Earth: Low Vo Block OFF*
SEF: Low Vo Block OFF SEF: Low Vo Block ON	This field determines the action that will occur when the polarising residual voltage Vo voltage is less than the user-set minimum Vo. When set to Low Vo Block ON all SEF overcurrent trips will be blocked if the residual voltage is less than the user-set minimum Vo. If Low Vo Block OFF is set then the SEF overcurrent faults will trip irrespective of direction if the residual voltage is less than the user-set minimum. *Default is SEF: Low Vo Block OFF*

1. The 'P' and 'D' indications in the following tables do not appear on the display. 'D' indicates 'Display Only' (cannot be changed); 'P' indicates 'Password Protected' (can be changed only by password holder).

Directional blocking page 2A

This page has the general format:

The description of the fields shown in the display page 2A are shown below. Both fields are Password Protected.

```
 - - - - -DIRECTIONAL BLOCKING 2A  - - - -P
Phase Characteristic Angle   45 Deg
Earth Characteristic Angle -180 Deg
```

Field	Explanation
Phase Characteristic Angle 45 Deg	Sets the characteristic angle for phase trip blocking. *Default is 45 deg*
Earth Characteristic Angle -180 Deg	Sets the characteristic angle for earth trip blocking. Default is -180 deg

Directional blocking page 3A

This page has the general format:

The actual contents of the data rows and the field descriptions are shown in the following tables

```
 - - - - -DIRECTIONAL BLOCKING 3A  - - - P
Nom P/E volts 6.3kV       Vo Balance DISABLED
Min Earth Vo 20%          Min SEF Vo 5%
High Vo DISABLED          High Vo Alarm OFF
```

DIRECTIONAL BLOCKING 3A			P
Nom P-E Volts 6.3kV	P	Vo Balance DISABLED Vo Balance ENABLED Vo Balance Paused Vo Balancing	P P D D
Min Earth Vo xx%	P	Min SEF Vo x%	P
High Vo DISABLED High Vo xs	P	High Vo Alarm OFF High Vo Alarm ON	D

.

Field	Explanation[a]
Nom P-E Volts 6.3kV	Sets the nominal system phase to earth voltage. This is used to calculate the Vo % thresholds. *Default is 6.3kV*
Vo Balance ENABLED Vo Balance DISABLED Vo Balance Paused Vo Balancing	Shows the status of the residual voltage dynamic balancing process, and allows the operator to enable or disable residual voltage balancing. “Vo Balance Disabled” means that balancing is OFF. “Vo Balance Paused” means no balancing is taking place – due to one of the conditions listed in "Earth Residual Voltage Balancing" (page 61). “Vo Balancing” means that phase balancing is taking place (up to 20% of Nom P-E Volts). *Default is disabled*
Min Earth Vo	This field allows the user to set the Low Vo level. This level is specified as a percentage of the nominal system phase to Earth voltage. *Default and minimum value is 20%*
Min SEF Vo	This field allows the user to set the Low Vo level. This level is specified as a percentage of the nominal system phase to Earth voltage. *Default and minimum value is 5%*
High Vo Alarm DISABLED High Vo Alarm 5s	Controls the High Vo alarm. Setting a time enables the alarm. Setting disable, disables the alarm. *Default is DISABLED*
High Vo Alarm OFF High Vo Alarm ON	This is display indication of the High Vo alarm status

a. Different default values may be factory loaded.

Parameters to be Configured

Directional Blocking requires the following parameters to be set correctly:

- Directional[1] Blocking to be made available

DIRB Available

on:

SYSTEM STATUS - Options 2:DIRB Not Available

- The Source/Load direction to be set on:

SYSTEM STATUS - PHASE VOLTAGE and POWER FLOW

- The System Voltage to be set on

Directional Blocking 3:Nom P-E Volts 6.3kV

This is the nominal phase/earth system voltage.

- Residual voltage balancing configured if required to improve SEF detection in earthed systems in

Directional Blocking 3:Vo Balance Disabled

- High Vo alarm time, or disabled in:

Directional Blocking 3:High Vo Alarm Disabled

For Phase and Earth/SEF, the following parameters must be set on:

Directional Blocking 1, 2 and 3

- The characteristic angle.
- The trip direction.
- The low voltage blocking to be turned on or off.
- The minimum Vo for Earth and SEF protection (set independently).

In addition, the normal protection parameters must also be set.

1. When set to “Not Available”, Directional Blocking is disabled and all of the directional blocking pages in the protection groups are hidden.

11 Event Log

When the status of the control electronics or switchgear changes, *events* are generated which are recorded in an *Event Log* for display to the operator. Examples of such events are ‘Load Supply On’ or ‘Lockout’.

Events are viewed on the Event Log pages and can also be up-loaded and viewed with the Windows Switchgear Operating System.

The event log display looks like this:

```
          EVENT LOG
10/01/01 12:09:02.06Close Coil Connect
10/01/01 12:09:03.95Panel close req
10/01/01 12:09:37.95Load Supply ON
```

Events are dated, time stamped to a 10ms resolution and displayed in the order in which they occurred.

The ⩤ key scrolls the display *downward* to show older events, the ⩥ key scrolls the display *upward* to show more recent events. Pressing the ⩤ key removes the title of the display to make more room for events. The title will only be restored when the event log is selected again from the top level menu.

Appendix G (page 135) lists all the events in alphabetical order and explains when they are generated.

Display Updating

The event log display will update automatically with new events provided the most recent event is on the bottom line of the screen. When new events occur they are entered at the bottom of the screen and the older events are scrolled up.

Protection Generated Events

The circuit breaker generates events to aid the user in analysis of faults or in testing. Events are generated which indicate the following things:

- Protection ‘Pickup’ occurs when any of the enabled protection elements pick up (this event is particularly useful when current injection testing).
- Circuit Breaker trip under protection. A series of events indicate the active protection setting, type of protection and the number of the trip, either single shot or trips 1, 2, 3 or 4.
- The maximum value of the protection elements involved in the trip detected by the protection relay. Some faults will cause pickup of more than one element and events are generated for these as well. These events are not generated until all elements have fallen back to their normal values. This means they will be time stamped after the Protection Trip in the event log.
- Automatic reclose of the circuit breaker.
- Expiration of the sequence reset timer. This indicates the protection relay has reset back to the beginning of the reclose sequence.

Loss of Supply Events

The control electronics monitors voltage screens embedded in the H.V. bushings to determine if the terminals are live.

Live/Dead indication is shown on real time displays (see later) when the phase/earth voltage exceeds a user configured threshold, in page

SYSTEM STATUS - PHASE VOLTAGE and POWER FLOW:“LIVE”if > 2000V

Terminals are designated as Dead when the voltage falls 20% below the live threshold. The live/dead status is used to generate events when source supply is lost. To determine if supply is ON, the live status must be sustained on all three source side terminals for the time set by the user in page.

SYSTEM STATUS - PHASE VOLTAGE and POWER FLOW: Supply Timeout 5.0s

If this occurs then a 'Source Supply ON’ event is generated.

When supply is lost on all three phases for the Supply Timeout, a 'Source Supply OFF' event is generated.

The load side is also monitored to generate 'Load Supply ON' and 'Load Supply OFF' events.

If[1] individual phases change from LIVE to DEAD or vice-versa for the Supply Timeout then events are generated for these phases e.g. 'B1 Live', 'B2 Dead'.

1. The designated Source and Load sides can be swapped in relation to the switchgear terminals, refer to "Power Flow Direction" - page 69.

Typical Event Log Displays

A typical sequence of events for a phase/phase fault, which had instantaneous protection on the first trip and inverse time protection on the second trip, with two trips to lockout might be as shown in Figure 25 (page 68).

However, if the fault was cleared after the first trip has occurred, the controller will generate a 'Sequence Reset' event once the Sequence Reset Time has expired, as shown in Figure 26 (page 68).

.

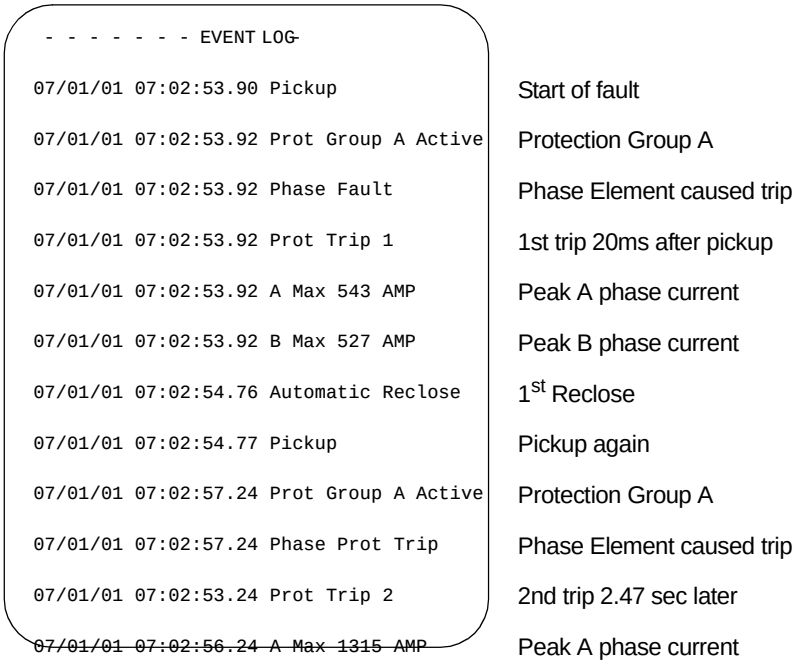

Figure 25: Event Log example-Phase to Phase fault

.

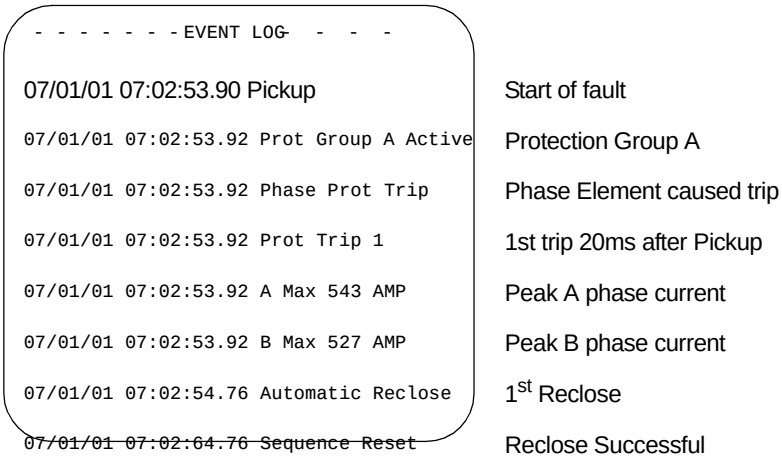

Figure 26: Sequence Reset Example

12 Power System Measurements

The Control and Protection Module (CAPM) digitises the current transformer (CT) signals and voltage screen (CVT) signals from the recloser.

These are used to provide a variety of data for the operator.

Power System Frequency

The controller must be set for the correct power system frequency – either 50 or 60 Hz. This is set on page

SYSTEM STATUS - PHASE VOLTAGE and POWER FLOW: System Freq 50/60 Hz

Switchgear Terminal Designation

The six bushings on the circuit breaker are labelled UI,V1, W1 and U2, V2, W2.

Bushings must have the correct power system phase assigned at time of installation, a process called “setting the phasing". Setting the phasing affects all the displays, events, etc., concerned with circuit breaker terminals, for example: voltage measurements, live/dead terminal displays and maximum current events.

Phasing is set from page.

SYSTEM STATUS - SWITCHGEAR TERMINAL DESIGNATION

The first line of the display allows the operator to cycle between the six possible phase combinations (ABC, ACB, BAC, BCA, CAB, CBA). When the operator presses the **ENTER** key, the controller then orientates the currents and voltages to match the selection.

After the phasing has been set, the operator should record the details on the Operating Instructions label affixed to the rear of the control cubicle door to indicate the relationship between the bushings and phases.

.

SWITCHGEAR TERMINAL DESIGNATION				S
U1/U2	Bushings		A Phase[a]	P
V1/V2	Bushings		B Phase	P
W1/W2	Bushings		C Phase	P

Switchgear Terminal Designation screen

a.The phase designations can be rotated from this field by pressing the arrow key (ABC, ACB, BAC, BCA, CAB, CBA).

Power Flow Direction

The switch is a symmetrical device meaning that either side can be connected to the power source.

Consequently, after installation, the controller must be configured to designate source side. This is done by configuring the direction of power flow so that *positive* power flows from source to load. The engineer can configure which set of bushings corresponds to the source and load.

The power flow direction is configured on pages

SYSTEM STATUS - PHASE VOLTAGE and POWER FLOW: Source I, Load 2

SYSTEM STATUS - PHASE VOLTAGE and POWER FLOW: Source 2, Load I

When changed, this reverses the power flow direction but not the phasing.See "Switchgear Terminal Designation" (page 69).

Power flow direction setting is used to determine:

- Whether the source or load corresponds to (1) or (2) on the voltage measurement displays.
- Which direction is positive power flow for use on the kWh totals in the Maximum Weekly Demand display and APGS.
- Which is the source or load for Live Load Blocking.
- Which is the source or load for Directional Blocking.

Real Time Displays

The CT and CVT signals are digitally processed to measure data, which is displayed on the Operator Control Panel in real time. Data displayed is as follows:

- NPS current.
- Currents in each phase and to earth.
- Real Power (kW), this is a signed quantity unless Power Flow Unsigned has been selected on page:

SYSTEM STATUS - PHASE VOLTAGE and POWER FLOW: Power Flow Signed/Unsigned

- Power Factor (PF), this is an unsigned quantity.
- Voltage on the source side terminals. The voltages can be either phase to phase or phase to earth. This is a selectable item from:

SYSTEM STATUS - PHASE VOLTAGE and POWER FLOW: Display Ph-Ph Volt

- Live/Dead indication on all six terminals.

The displayed data looks like this

```
- - - -  INSTANTANEOUS DEMAND - - - M
Earth    0 Amp      A Phase    123 Amp
NPS      0 Amp      B Phase    128 Amp
                    C Phase    121 Amp
```

```
- - - -  System Measurements- - - - M
Freq    Unavailable  Power(P) 2479 kW
                     Power(Q) 200 kVAR
                     Power Factor0.93
```

```
- - - - - SOURCE SIDE VOLTAGES - - - M
A1   phase  to earth 12700 Volt
B1   phase  to earth 12700 Volt
C1   phase  to earth 12700 Volt
```

```
- - - - - LOAD SIDE VOLTAGES - - - - M
A2  phase  to earth  12700  Volt
B2  phase  to earth  12700  Volt
C2  phase  to earth  12700  Volt
```

If phase to phase voltages are selected rather than phase to earth then the measurement page 2 and 3 text will change.

An example of the new text is as follows:

```
- - - -  SOURCE SIDE VOLTAGES  - - - M
A1-B1  phase to phase 22000 Volt
B1-C1  phase to phase 22000 Volt
C1-A1  phase to phase 22000 Volt
```

```
- - - - - LOAD SIDE VOLTAGES - - - - M
A2-B2  phase to phase 22000 Volt
B2-C2  phase to phase 22000 Volt
C2-A2  phase to phase 22000 Volt
```

The page

SYSTEM STATUS - LIVE/DEAD INDICATION

displays the terminal live/dead indication as follows:

```
- - - -  LIVE/DEAD INDICATION  - - S
A1   Live          A2    Live
B1   Live          B2    Live
C1   Live          C2    Live
```

Maximum Demand Data Displays

Monthly Maximum

For each calendar month, the period with the greater average Real Power is recorded and displayed on the Operator Control Panel. Data displayed is as follows (each value is reset on power up):

- The month/year for the peak period on display.
- The time at the end of the peak averaging period.
- The Real Power (kW) during the peak period. This is a signed quantity unless Power Flow Unsigned has been selected on:

SYSTEM STATUS - PHASE VOLTAGE and POWER FLOW: Power Flow Signed/Unsigned

- The Power Factor (PF) during the peak period.
- The total integrated real power flow (kWh) during the month. In a system where power can flow both ways this quantity will show either the net energy flow (i.e. zero if equal energy had flowed both ways) or the total power flow irrespective of the direction depending on page.

SYSTEM STATUS - PHASE VOLTAGE and POWER FLOW: Power Flow Signed/Unsigned

The displayed data looks like this:

```
- - - - -  MONTHLY DEMAND  - - - - - M
Jan/2001          Total     28565kWh
Peak Period       12/01/200117:15:00
Peak Demand       1235kW      0.93PF
```

If there is no Monthly Demand data available the display will look like this:

```
- - - - - - MONTHLY DEMAND - - - - -M

        NO MONTHLY DATA AVAILABLE
```

Weekly Maximum

For each week, the period with the greater average Real Power is recorded and displayed on the Operator Control Panel. Demand Data displayed is as follows (each value is reset on power up):

- The date of the last day of the week for the peak period on display.
- The time of the end of the peak averaging period.
- The Real Power (kW) during the peak period. This is a signed quantity unless Power Flow Unsigned has been selected on:

SYSTEM STATUS - PHASE VOLTAGE and POWER FLOW: Power Flow Signed/Unsigned

- The Power Factor (PF) during the peak period.
- The total Integrated Real Power flow (kWh) during the week. In a system where power can flow both ways this quantity will show either the net energy flow (i.e.: zero if equal energy had flowed both ways) or the total power flow irrespective of the direction depending on page.

SYSTEM STATUS - PHASE VOLTAGE and POWER FLOW: Power Flow Signed/Unsigned

- The displayed data looks like this:

```
 - - - -  WEEKLY MAXIMUM DEMAND- - - M
weekending  10/01/2001  total7565kWh
peakperiod  07/01/2001  17:15:00
peakdemand  31141kW      0.93 PF
```

If there is no Weekly Demand data available the display will look like this:

```
  - - - - WEEKLY MAXIMUM DEMAND - -  M

        NO WEEKLY DATA AVAILABLE
```

Average Demand Data Displays - Default

The real time data is averaged over a user set period to provide average demand data that is then displayed on the control panel.

To set the average demand period press the **SELECT** key from the

MEASUREMENT: AVERAGE DEMAND HISTORY

screen to access the

MEASUREMENT: SAMPLE PERIOD

page. Press **SELECT** again and use the ⮜ ⮞ keys to vary the displayed period. Press **MENU** to return to page.

MEASUREMENT: AVERAGE DEMAND

Average Demand - Default

Data displayed is as follows:

- Date and time of the end of the averaging period.
- Currents in each phase averaged over the period.
- Real Power (kW) averaged over the period. This is a signed quantity unless Power Flow Unsigned has been selected on:

SYSTEM STATUS - PHASE VOLTAGE and POWER FLOW: Power Flow Signed/Unsigned

- Power Factor (PF) averaged over the period.

The displayed data looks like this:

```
 - - - - -  AVERAGE DEMAND  - - - - -M
12/01/2001 13:45:00A Phase     123Amp
2749 kW              B Phase     128Amp
0.93 PF              C Phase     121Amp
```

When first selected, the average demand display shows the most recent period.

To view older periods press the **SELECT** key and then the ⮜ ⮞ keys. To return to the most recent period press the **MENU** key.

Average Demand - Configurable

Average Demand data may be customised using WSOS.

Customised data is not available on the screen if this option is selected. However, the customised data can be retrieved and viewed through WSOS.

This operator message indicates that the Average Demand is no longer available at the control panel

```
- - - - - AVERAGE DEMAND- - - - - M

        CUSTOMISED DATA LOGGING
          WSOS DISPLAY ONLY
```

The following table details the data that may be configured and displayed through WSOS[1].

<table>
<tr><th colspan="3">WSOS Configurable Data</th></tr>
<tr><th colspan="2">Current</th><th>Power</th></tr>
<tr><td colspan="2">Mean I_{ABC} [a]
I_A
I_B
I_C
I_E</td><td>kW
kVa
kVAR
Power Factor</td></tr>
<tr><th colspan="2">Voltage</th><th>Switchgear Data</th></tr>
<tr><th>Phase to Earth</th><th>Phase to Phase</th><td rowspan="2">Electronics Compartment Temperature
Battery Voltage
Gas Pressure
Switchgear Temperature</td></tr>
<tr><td>Mean $V_{1\ ABC}$ [a.]
Mean $V_{2\ ABC}$ [a.]
V_{A1}
V_{B1}
V_{C1}
V_{A2}
V_{B2}
V_{C2}</td><td>Mean $V_{1\ ph\text{-}ph}$ [1]
Mean $V_{2\ ph\text{-}ph}$ [1]
$V_{1\ A\text{-}B}$
$V_{1\ B\text{-}C}$
$V_{1\ C\text{-}A}$
$V_{2\ A\text{-}B}$
$V_{2\ B\text{-}C}$
$V_{2\ C\text{-}A}$</td><td>Log Period
[ ] Minutes
Range: 1-1440 min</td></tr>
<tr><td>V_O
(only if Directional Blocking is enabled)</td><td>Auxiliary Supply</td><td>Estimated Time Before Oldest Data is Overwritten</td></tr>
</table>

WSOS Configurable Data Display

a. Means values are the 500ms average of the 3 phase values.

1. The Data Storage Time is calculated from the parameters selected from the above table and then displayed at the WSOS screen. All data is averaged over the logging period.

13 Supply Outage Measurement

Many Utilities analyse the supply outages to measure the quality of supply to their customers. The average duration and frequency of outages are key indicators in this process and they are commonly defined as:

- System Average Interruption Duration Index (SAIDI). This is equal to the average minutes lost per customer per year. Each utility has its own definition of lost customer minutes. For example, it may not include outages of one minute or less or outages resulting from transmission grid failures or major storms.
- System Average Interruption Frequency Index (SAIFI). This is equal to the average number of outages per customer per year. Once again each utility may define an outage in a different way.

The Supply Outage Measurement[1] feature utilises built-in recloser features to record the number and duration of outages. These statistics are recorded in the controller and are available to the Utility to help calculate SAIDI and SAIFI. The controller records the:

- cumulative total number of outages,
- cumulative total outage duration, and
- the time and duration of each outage event in the Event Log.

These records are accessible to the user and can be retrieved using the operator control panel, WSOS or a SCADA System.

Determination of Supply Outage

The controller monitors the circuit breaker terminal voltages to determine when there is an outage. A loss of supply voltage on one or more phases for a user-set time is defined as the start of the outage and when voltage is restored to all three phases for the same user-set time it is the end of the outage. The reported outage duration is the actual time without voltage.

Since the circuit breaker measures the voltages on both the source and load terminals, outages on source side and load side network segments are monitored separately. The circuit breaker logs the start and end time of each outage, the total duration and the number of outages on each network segment. When an outage is detected on either segment it is timed and the data is held in the database for future analysis.

If the circuit breaker is disconnected from the controller or the controller is powered down during an outage then the controller cannot determine the outage duration. In such cases the outage duration data for that specific outage is discarded. The outage counter is maintained.

Configuration and Display

Supply Outage Measurement is configured and displayed on:

MEASUREMENT – SUPPLY OUTAGES

SUPPLY OUTAGE					M
Measure Outages OFF Measure Outages ON		P	Out. Duration	60 s	P
Source outages	2	R	Duration	4h14m56s	R
Load outages	3	R	Duration	6h23m24s	R

Supply Outages screen

Field	Description
Measure Outages ON/OFF	Supply Outage Measurement [a]function enabled/disabled. *Default is Measure Outages OFF.*
Outage Duration	User-defined minimum time, in seconds, for terminals without voltage to be counted as supply outage. Also used as the minimum time for restored voltage before an outage is considered finished. *Range: 1 to 3600 sec.* *Default is 60s.*

Supply Outages - field descriptions

1. Supply Outage Measurement is the subject of a patent application.

Field	Description
Source Outages	Number of supply outages on the source terminals
Load Outages	Number of supply outages on the load terminals
Duration	Total duration of supply outages in hours, minutes and seconds for both source and load-side terminals. *Maximum: 9999 hours, 59 mins, 59 sec.*

Supply Outages - field descriptions

a. Different default values may be factory loaded.

The displayed data looks like this.

```
 - - - - -  SUPPLY OUTAGES - - - - -M
Measure OutagesON   Out.Duration 60s
Source Outages  3   Duration4h14m56s
Load Outages    3   Duration6h23m24s
```

Resetting the Counters and Timers

To reset the counters find:

MEASUREMENT – SUPPLY OUTAGES

- Press the **SELECT** key until a counter field flashes.
- Press ⮜or ⮞ keys to reset the counter.
- Press the **MENU** key to continue.

This resets both counters and both timers.

Event Record

A supply outage event is logged in the event record when the supply outage ends. Events are also logged when the operator turns this function ON or OFF, resets the counters and changes the source and load terminals.

The Supply Outage events are listed in the table below.

Event Text	Explanation
Load Out 59 m 59 s	The circuit breaker load terminals experienced a supply outage up to 59 minutes 59 seconds.
Load Out 99 h 59 m	The circuit breaker load terminals experienced a supply outage up to 99 hours 59 minutes.
Load Out 9999 h	The circuit breaker load terminals experienced a supply outage > 10,000 hours.
Outages ON Outages OFF	The operator has turned ON or OFF the supply outage measurement functions.
Outages reset	The operator has reset the four outage counters.
Source Out 59 m 59 s	The circuit breaker source terminals experienced a supply outage up to 59 minutes 59 seconds.
Source Out 99 h 59 m	The circuit breaker source terminals experienced a supply outage up to 99 hours 59 minutes.
Source Out 9999 h	The circuit breaker source terminals experienced a supply outage > 10,000 hours

Supply Outage events

The following example shows a typical sequence of events where a circuit breaker has lost supply due to an upstream fault:

```
  - - - - - - - EVENT LOG - - - - -

07/01/01 22:47:48.00 Source Supply OFF
07/01/01 22:47:48.00 Load Supply OFF
```

Loss of supply detected on both Source and Load sides.

```
07/01/01 22:52:17.90 Source Supply ON
07/01/01 22:52:17.90 Load Supply ON
```

Restored supply detected on both sides of the ACR.

Supply Outage Measurement

```
07/01/01 22:52:23.90 Source Out 4m 29s
07/01/01 22:52:23.90 Load Out 4m 29s
```

Supply outage is logged for source and load sides.

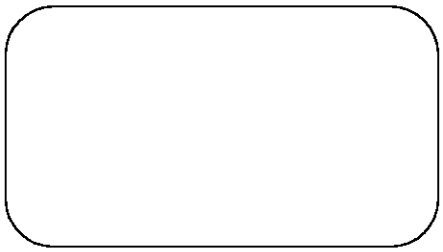

14 Loop Automation

Loop Automation is an optional feature that will, in the event of an outage, automatically reconfigure an electrical network to restore power to un-faulted sections.

When available Loop Automation adds additional display pages to the System Status display group. Loop Automation becomes available when

SYSTEM STATUS-OPTIONS 2:Loop Auto Available

is selected.

Loop Automation is documented in its own Technical Manual (Part Number: N00-380). Contact the manufacturer or your distributor for more information.

15 Generator Control

Operation

The Generator Control option allows a generator to be operated by an IOEX output in response to the loss of supply, which is sensed by the line side bushings.

After a preset time period (HV Dead Time) the CAPM will trip the ACR to isolate the load.

When the ACR opens, the CAPM, via a set of IOEX contacts will turn the generator on. The generator will stay on until the supply is restored.

When supply is restored to the system, and after the expiration of a preset time (HV Live Time) the generator is turned off and the CAPM will close the ACR to restore supply to the load.

Closing is prevented when supplying the load via the generator. This is a safety feature to prevent closing onto unsynchronised supplies.

Configuration and Display

This option can be turned ON or OFF in

SYSTEM STATUS - OPTIONS 1-Generator Control

With **"Generator Control On"** and the recloser in the open position it is impossible to close if the load side bushings are energised.

The actual contents of the data rows and the field descriptions are shown in the following tables.

OPTIONS 2			S
DIRB Not Avail DIRB Avail	P	Loop Auto Not Avail Loop Auto Available	P
LOP/Loop Auto Unlinked LOP/Loop Auto Linked		Dead Lockout OFF Dead Lockout ON	P
Lang English (Intl) Idioma Espanol Lingua Portugesa	P	GenCtrl Not Avail GenCtrl Avail	P

Options 2 screen

Field	Description
GenCtrl Not Avail GenCtrl Available	Generator Control Availability This field is used to make Generator Control option available or not available to operators. *Factory default is not available.*

Options 2-Field descriptions

To configure the IOEX mapping for Generator Control, the "Generator Control" and "Generator Run request" outputs should be assigned. See Section 17 (page 85).

The screen shown below will be displayed at the end of the existing status screen if Generator Control is available.

Generator Control						S
GenCtrl OFF GenCtrl ON						
HV Dead Time	5s			HV Live Time	5s	
Control State: GenCtrl OFF Control State: Switch Closed Control State: Line Dead Check Control State: Wait Switch Open Control State: Wait Generator Live Control State: Generator Running Control State: Line Live Check Control State: Wait Generator Off Control State: Wait Switch Closed						D

Generator Control screen

Field	Description
GenCtrl ON GenCtrl OFF	Generator Control This field is used to turn on or off the Generator Control option. *Factory default is OFF.*
HV Dead Time	Amount of time line side bushings are “dead” before any action performed by Generator Control. Also used to detect when a generator is stopped. Range: 1 to 600 sec *Factory default is 5 sec.*
HV Live Time	Amount of time line side bushings are “live” before any action performed by Generator Control. Also used to detect when a generator is running. Range: 1 to 600 sec *Factory default is 5 sec.*
Control State	Control State Shows what Generator Control is doing.

Generator Control-field descriptions

16 Communications Interfaces

The Control and Protection Module (CAPM) provides an external communications interface for connection into a communications system.

This interface can be used by a remote computer to monitor and control the recloser. Typical applications would be connection into a SCADA system for remote operator control or connection into a distribution automation system for automatic control by a supervising computer.

Two physical interfaces are provided on the CAPM, either interface can be used:

- V23 FSK modem with radio interface signals.
- RS232 interface.

These are detailed below. In addition, a switch mode power supply is provided to power the radio/ modem.

RS232 Ports P8 and P9 and V23 Port P10 are not isolated from each other or the controller electronics.

Consequently, they should only be connected to devices inside the PTCC that are powered by the PTCC radio supply, including Modems, optical isolators, and radios.

Use of the serial ports to connect directly to other devices outside the PTCC may cause damage and voids any warranty.

If V23 connection to devices outside the PTCC is essential, the manufacturers 600 ohm interface accessory is recommended.

V23 Interface

An in-built FSK modem provides half duplex V23 signalling at 1200 bits per second. This interface is primarily designed for use with voice frequency radio systems and provides additional signals for this purpose.This interface is available on CAPM plug P10 which is a 16 way ribbon header, or a factory fitted cable may have been supplied to connect direct to the radio.

Unless a particular radio cable is ordered, a standard cable (part number N03-530) with a female 15 way "D" connector is fitted. The cable is run to the bottom of the radio panel. This cable allows a simple "personalised" cable to connect from the standard cable to a particular radio type. The "personalised" cable can be fitted in the field without the need to open the electronics compartment. Contact the manufacturer for the supply of "personalised" cables suitable for particular radio types required.

Signals provided are:

Cable (N03-530)	P10 Pin	Direction	Use
5	5	-	0 Volts (ground/earth)
4	4	To CAPM	Receive, 10 kOhm impedance Sensitivity 0.1 – 2V pk-pk
15	15	From CAPM	Press to talk (PTT)
11	11	From CAPM	Transmit, 600 Ohm impedance Level 2.5V pk-pk
6	6	To CAPM	Busy, 10 kOhm impedance

The Press to Talk (PTT) signal is used to key up a radio transmitter. PTT is implemented using a Field Effect Transistor (FET) with an on resistance of less than 1 ohm. When PTT is asserted the transistor is turned on and connects the PTT signal to 0V. (i.e. the equivalent of a relay contact to earth).

A busy signal can be provided by the radio to indicate receive channel busy. High level is +4.5 to +5V, low level 0V to +0.5V.

Caution

Levels in excess of ±13V should not be applied. The FET is rated for a maximum of +32V and negative voltages are not permitted.
Transmit and receive are unbalanced signals relative to 0 volts and are not isolated. If a DC level is imposed by the radio on the transmit line then this should be less than 2.5 VDC.

A 600 ohm line isolator accessory (TERM1) is available from the manufacturer.

RS232 Interface

An RS232 interface is available on CAPM plug P8 which is a standard D25 male or a factory fitted cable may have been provided to connect directly to the modem. This interface is provided to connect to conventional modems which provide the correct signalling for the communications network used, e.g. optical fibre modem or telephone dial up modem, as follows

P8 Pin No:	Direction	Use when connected	Not connected	Internal Use Do Not Connect
1		0V (ground/earth)		
2	From CAPM	Tx Data (TxD)		
3	To CAPM	Rx Data (RxD)		
4	From CAPM	Request To Send (RTS)		
5	To CAPM	Clear To Send (CTS)		
6			X	
7		0V (ground/earth)		
8	To CAPM	Data Carrier Detect (DCD)		
9				X
10				X
11				X
12			X	
13			X	
14				X
15			X	
16				X
17			X	
18				X
19			X	
20	From CAPM	Data Terminal Ready (DTR)		
21			X	
22			X	
23			X	
24			X	
25				X

P9 Configurable Baud Rate

The CAPM Port P9 defaults to fixed 19200 baud, Local mode. If made available to the operator via WSOS, the baud rate and mode can be configured in the CAPM. When WSOS goes online it attempts to communicate at 19.2k baud. If unsuccessful it cycles through 9600, 2400, 1200, 600 and back to 19.2k baud until successful.

Operation

WSOS provides the capability for the operator to designate the mode of operation of the P9 port.

Port P9 can be configured by the operator when made available via WSOS. This allows the operator to:

- Set a fixed or configurable baud rate.
- Designate P9 as Local or Remote.[1]

Port P9 can be configured using WSOS or the OCPM.

1. The default setting is Local.

The actual contents of the data rows and the field descriptions are shown in the following table.

WSOS Port P9 Communications			S
Baud 19200 Selection in the range 600,1200, 2400, 9600 and 19200.	P	Mode Local Mode Remote	P

WSOS Port P9 Communications screen and description

The following screen shows P9 set to a Baud rate of 19200 and Local mode of operation.

Changes to the P9 settings will generate an event in the Event Log.

```
- - - -WSOS PORT P9 Communications  S
Baud      19200  Mode         Local
```

Radio/Modem Power

A switched mode power supply for a radio/modem is built into the CAPM and draws its power from the auxiliary supply and/or the battery.[1]

The supply is available on plug P3 of the CAPM via a disconnect type terminal block. A factory fitted cable to connect directly to the radio/modem may have been provided. Connections are as follows:

Standard Cable Type N03-530, 15 Way D Female	P3 Pin No:	Direction	Use
8	AUX +	FROM CAPM	RADIO/MODEM POWER SUPPLY POSITIVE
1	EARTH	FROM CAPM	0V (EARTH)

The radio/modem power supply voltage is set by the user from the Operator Control Panel in the

SYSTEM STATUS -RADIO and TIME SET: Radio Supply 12 Volts

page. This is a password protected parameter.

If the auxiliary power fails, battery power can be conserved by automatically shutting down the radio/modem power supply. The shutdown takes place after the radio holdup time, set on the

SYSTEM STATUS -RADIO and TIME SET: Radio Hold 60 min

page by the user, has elapsed. If the Radio Hold time is set to zero then the radio supply will not shutdown, except under special circumstances. See "LV Auxiliary Power from Mains" - page 96 . The radio/modem power supply is restored when the auxiliary supply returns to normal.

The radio/modem power supply can be turned on and off by the operator for radio maintenance without passwords in the

SYSTEM STATUS -RADIO and TIME SET: Radio Supply ON

page. If the radio supply has shutdown it will be indicated on page:

SYSTEM STATUS -RADIO and TIME SET

Connections Into Electronics Compartment

Connections to the CAPM (if not factory fitted) must be run through the rubber cable ducting in the middle of the equipment panel. This ducting provides a sealed entry into the electronics compartment thus keeping out airborne pollution.

It should not normally be necessary to run additional cables into the electronics compartment. However, if cables must be run, slots in the ducting have been left free for the purpose of connecting radio/modem data and power. If these cables were not factory fitted the slots will have been sealed with rubber cord.

To run cables into the electronics compartment, remove the cords and use their slots.

All cables running into the electronics compartment must be round, sheathed and between 9 and 10.5mm in diameter to ensure a good seal.

1. The power supply is not isolated.

Heatshrink sleeving can be used to increase the diameter of a cable. See "Replacement of Electronic Modules" - page 106 for instructions on removing the electronics compartment cover to gain access to the CAPM.

17 Input Output Expander Card

The optional Input Output Expander (IOEX) card provides optically isolated input contacts and voltage free output contacts to allow connection of an external Remote Terminal Unit (RTU). It is installed in a die cast, sealed enclosure mounted on the radio tray and earthed to an equipment panel mounting bolt. See "IOEX Cabling" - page 95 for external wiring recommendations.

A “mapping” held in the CAPM database controls the function of the IOEX. It specifies what database information is “mapped” into the IOEX outputs and which controls are “mapped” into the IOEX inputs.

The bottom line of the IOEX Status display page identifies the mapping loaded:

- The standard mapping for inputs and outputs are shown in "Inputs - Standard Mapping" (page 86) and "Outputs - Standard Mapping" (page 87).
- Some equipment may be supplied with alternative mappings.

Field Excitation

The field excitation for IOEX inputs/outputs MUST NOT be provided from the control cubicle battery nor the radio power supply. Doing so will breach the isolation barriers and introduce serious risk of damage or interference to the control electronics.

IOEX as Local/ Remote User

An IOEX can be designated from the IOEX Status Page as either Local or Remote User. See Section 8 (page 35) for further information on Local and Remote Users.

IOEX Status Page

The

SYSTEM STATUS-IOEX Status

page displays the status of the IOEX inputs and outputs to assist debugging during installation and maintenance.

The top line of the display is the page title and the letter “**S**” to the right indicates that this page is located in the System Status Display Group. The next three lines are the data on display, consisting of one selection from each data cell. To the right of each data cell in the table is a small column containing a letter indicating the type of data. These letters, which *are not* shown on the display, indicate:

P - Password Protected (i.e. can only be changed if the password is known)

D – Display Only (i.e. Cannot be changed).

IOEX Status				S
Inputs	1 – – – – * – – – – – – – 12	D	Local Remote	P
Outputs	1 – * – – – – – * 8	D	IOEX OK Invalid Map Initialising Unplugged Wrong Type	D
Standard IOEX Mapping.				D

IOEX Status screen

The fields are described as follows:

Field	Explanation
Inputs 1 - - - - * - - - - - - - 12	This indicates the current state of the inputs. A dash – represents the OFF state and an asterisk * the ON state.
Outputs 1 - * - - - - - * 8	This indicates the current state of the outputs. A dash – represents the OFF state and an asterisk * the ON state.
IOEX Local IOEX Remote	Designates the IOEX to be either a local or a remote user. See "Definition of Local or Remote User" - page 35 .
IOEX OK	Shows the status of the IOEX: “IOEX OK” means that the mapping is valid and in service.

IOEX Status screen descriptions

Field	Explanation
Invalid Map	“Invalid Map” means there is a problem with the IOEX mapping in the database. Contact the manufacturer.
Unplugged	“Unplugged” is displayed if the CAPM is not receiving data from the IOEX, check the cabling.
Wrong Type	“Wrong Type” is displayed if the IOEX hardware is detected as being different to the mapping, contact the manufacturer.
Initialising	“Initialising” is displayed while the IOEX is being initialised.

IOEX Status screen descriptions

When the IOEX configuration is invalid or has some other problems such as wrong hardware type, the OCPM flashes the message

IOEX Configuration Corrupt or Invalid

at the top of the screen.

The displayed data looks like this.

IOEX STATUSS
Inputs1----------12Local
Outputs1*--*----8Unplugged

Inputs - Standard Mapping

The IOEX has12 independent, optically isolated inputs, each with Metal Oxide Varistor (MOV) protection. DC in either polarity or AC input signals are accepted. Input Voltage range is 60–130 VAC or 18– 150 VDC.

Input Number	Terminal Number	Inputs ON
		Recloser
1	1-2	Trip the switchgear, set lockout and inhibit all close operations
2	3-4	Close the circuit breaker
3	5-6	SEF protection ON
4	7-8	SEF protection OFF
5	9-10	Auto Reclose ON
6	11-12	Auto Reclose OFF
7	13-14	Protection Set A Selected
8	15-16	Protection Set B Selected

Inputs - Standard Mapping

- The recloser “close” input will only function when the controller is set to the designated IOEX mode and the Work Tag is off. For example, if the IOEX card is designated as local then the IOEX close input will only operate when the controller is in the Local mode of operation and the Work Tag is turned off. See Section 8 (page 35).
- Tripping and controlling all other settings works in Local and Remote modes and is independent of the Work Tag status.
- If the IOEX Trip input is held on while either the IOEX close or manual close input is activated, the recloser will not close. This is indicated in the event log by a ‘Close Blocking ON’ and ‘Close Blocking OFF’ event whenever the IOEX Trip input changes state.
- The SEF protection ON functionality operates as discussed in "Sensitive Earth Fault Control" (page 41). If the earth fault protection or the SEF availability for the active protection group are turned off then the SEF protection will **NOT** turn on.
- If both SEF protection ON and OFF inputs are on, the default is SEF protection ON.
- If both Auto Reclose ON and OFF inputs are on, the default is Auto Reclose ON.

Outputs - Standard Mapping

The IOEX has 8 independent voltage free relay contact outputs, each with MOV protection. The contacts are rated for 150 VAC, 2A or 150 VDC, 1A non-inductive.

Output Number[a]	Terminal Number	Output On (relay closed)	Output Off (relay open)
1	25-26	Tripped	Closed
2	27-28	Closed	Tripped
3	29-30	Flag A, Overcurrent Protection Trip indication.	
4	31-32	Lockout	Not in lockout
5	33-34	SEF protection ON	SEF protection OFF
6	35-36	Auto Reclose ON	Auto Reclose OFF
7	37-38	Flag B, Overcurrent Protection Trip indication.	
8	39-40	System Healthy See Section (page 87)	Other conditions

Outputs - Standard Mapping

a. The IOEX contacts are not guaranteed to change during fast Auto Reclose sequences but will indicate the final steady state condition within 150ms.

Trip Source[a]	Flag A, Trip indication	Flag B, Trip indication
Reset, Set to this state on Recloser Close.	Off	Off
Phase Trip	On	On
Earth Trip	Off	On
SEF Trip	On	Off

a. The trip Source outputs do not indicate other causes of a trip such as Loss of Phase.

System Healthy Indicator

The IOEX system healthy indicator is present when all of the following are true:

- Aux Supply OK.
- Battery Supply OK.
- SCEM Data Valid.
- CAPM Electronics OK.
- Gas pressure normal.
- Contact Life greater than 20% on all phases.
- IOEX to CAPM communications OK.
- Mechanism OK

Failure of any of these will cause the system healthy flag to be extinguished.

Power Consumption

If an IOEX card is fitted to the control cubicle, the battery holdup time can be affected.

This is due to the current drawn by the IOEX card and its relay coils. The manufacturer's battery holdup time rating is based on a recloser installation without the IOEX card fitted.

Configurable IOEX

WSOS incorporates the Configurable IOEX tool that allows users to generate custom I/O mappings for an IOEX card.

Logic can be applied to each point with up to five sets of logic or "actions" for each input and one trigger action for each output.

This tool can be launched from within WSOS and used to individually define each of the twelve inputs and eight outputs for an IOEX map.

Scope

The Configurable IOEX tool can only create mappings that are compatible with CAPM software versions 027-07.xx (CAPM 4) and 527-07.xx (CAPM 5), and all later versions.

The tool can be used to read mappings from previous versions of software but can only create files for use with the specified software versions.

The manufacturers WSOS Version 4.12 or higher is also required to use the Configurable IOEX tool.

Overview

Custom maps can now be created for an IOEX and loaded into a CAPM directly from WSOS. The types of actions that can be mapped to each input or output is dependent on the software version loaded into the CAPM.

When the tool is started the user is asked to input the software version.This is then used to retrieve a valid set of points to use when constructing logic within the tool.

The mappings and I/O logic are created using the tool and saved to an IOEX mapping file on the WSOS computer. Once a valid file has been created it is linked to the switchgear device configuration in WSOS and written into the CAPM.

The IOEX Configuration tool is intended to be used Off-Line only. Mappings are created, saved and linked to a WSOS switchgear device configuration while disconnected from the switchgear. Once these tasks have been completed the user connects to the device and writes the new mapping into the CAPM along with the switchgear device configuration.

When this tool is installed, a technical manual describing its operation and use is available through the WSOS Help menu.

18 Accessories

Test and Training Set (TTS)

For simplified testing in the field or in the workshop a purpose built test set called a Test and Training Set (TTS) is available.

The TTS is a briefcase sized test set which connects to the control cubicle and allows a standard secondary injection test set to be connected to inject currents into the control cubicle. The TTS will also simulate the circuit breaker and allow comprehensive testing of the control electronics. The TTS is highly suited to train staff in maintenance and operations.

The test and training set is purchased as a separate item. For further information refer to your distributor.

Windows Switchgear Operating System (WSOS)

Section 7 (page 29) describes the built-in operator control panel. An alternative interface to the operator panel is the *Windows Switchgear Operating System (WSOS*). This is a software package for a Personal Computer (PC) that allows management, control and monitoring of a population of reclosers. WSOS is purchased as an additional item. For pricing information refer to your distributor.

WSOS provides facilities for:

- Online and Offline management of all protection settings.
- Tripping and Closing of the switchgear and other operator control functions.
- Up-loading of historical data (e.g. event record or demand measurements) into the computer, which can be taken away and processed elsewhere.
- Automatic dial-back from the controller to the WSOS PC on change of state.

Embedded in the circuit breaker controller is server software for the WSOS package. The server provides two interfaces for connection to WSOS as described below.

Connection can be made from a PC to the WSOS server at either port but only one port can be used at any one time.

Electronics Compartment Computer Port (P9)

This is the computer port on the front of the electronics compartment also known as the P9 port. See Figure 2 (page 24).

It is a standard RS232 connection running at 19.2 kBaud unless otherwise requested.

The port is normally used to connect a portable notebook PC for maintenance purposes such as downloading settings or uploading the event record. This port is designated a Local User, as defined in "Definition of Local or Remote User" (page 35), and requires no configuration.

Telemetry Port (P8)

This is a standard RS232 port and provides remote access to a PC running WSOS located elsewhere such as in an office or a workshop. For details of the hardware interface. See "RS232 Interface" (page 82).

To gain remote access a modem must be installed in the control cubicle allowing the PC to control the recloser from another location. Typically the modem is connected to a telephone line or is itself a digital cellular telephone modem.

The modem allows an engineer or operator to dial into the controller and check on the event record or make protection setting changes.

In addition the controller can be configured to dial the PC automatically when events occur such as trip to lockout. This is called Change of State (COS) reporting and allows a WSOS computer to be used as a monitoring system for a population of circuit breakers. More information is provided in the WSOS Technical Supplement Manual N00-402.

This port is designated as a Remote User, as defined in "Local/Remote/Hit and Run Mode" (page 35). "RS232 Interface" (page 82) gives details of the hardware interface. In some software configurations this port is used by other protocols, in which case it cannot be used for WSOS connection at the same time.

The port is configured on

SYSTEM STATUS - WSOS Port P8 Communications

and requires:

- The baud rate must be set to match the modem interface to allow dial-in access to WSOS (this is not necessarily the same as the modem signalling speed, refer to the modem manual)
- CAPM 4 possible range is 300 baud to 9.6 kBaud.
- CAPM 5 possible range is 300 baud to 19.2 kBaud.
- “COS On” if Change of State Reporting is required. In this case a telephone number is also required.

Outline of Operation

The WSOS manual supplement document number N00-402 gives more details on the operation of P8 as a remote WSOS port. In summary it:

- Operates as a RS232 interface.
- Supports TXD, RXD and DCD and in turn requires these signals to be supported by the modem or otherwise correctly wired.
- If communication to a WSOS PC has occurred in the last 10 seconds or DCD is asserted then "Online" is displayed on

  SYSTEM STATUS - WSOS Port P8 Communications

- The port uses the Hayes command set to make the dialup connection and therefore this must be supported by the modem. Whilst dialling "Dialling" is displayed as the status. If dialling does not result in a connection then retries are made and if they do not succeed then the modem is powered down and up again before further attempts to connect are made.
- Once connected the controller waits for WSOS to interrogate (poll) it. Provided successful polls take place the controller then resets it change flags so that it will not call again until there is another change. If at any time there is no poll from the WSOS PC for 60 seconds then the controller will terminate the connection using the Hayes hang-up command, or if that fails by powering down the modem.

Manual Operation Set

The manual operation set allows a user to manually trip or close the circuit breaker when a control cubicle is either not available or not working. It operates the actuator inside the circuit breaker from its own trip/close capacitor using its own batteries. No external power source is needed.

The Manual Operation Set is purchased as an additional item, for further information refer to your distributor.

Remote Control Panel

The remote control panel provides dual control for the manufacturer's Reclosers installed in Sub-Station applications. The remote control panel duplicates the Operator Control Panel to provide almost identical functionality to that provided at the Control Cubicle.

The Remote Control Panel is purchased as an additional item, for further information refer to your distributor.

Secondary Voltage Injection Interface Set

The Secondary Voltage Injection Interface Set (SVIIS) enables the direct injection of low voltage for testing of the control cubicle protection or Distribution System Automation functions.

It may be used to:

- Inject voltage signals when connected to a Test and Training Set.
- Simulate loss of voltage on an energised recloser.
- Confirm the Pole Top Control Cubicle (PTCC) and control cable connections on all the manufacturer's Pole Top Circuit Breakers.
- The SVIIS is provided with a separate Technical Manual N05-633. This manual describes the configurations that the SVIIS may be used within.
- Test procedures using the SVIIS are described in detail within the manufacturer's "Workshop and Field Test" Manual. Refer to the manufacturer or your local distributor.

Fast Trip Input Module

A Fast Trip Input Module (FTIM) is available as an accessory.

This provides an optically isolated input to unconditionally trip the circuit breaker within 60ms of activation (including debounce and breaker operating time).

The FTIM is purchased as an additional item, for further information refer to your distributor.

19 Installation

Unpacking & Checking

Contents of Crate

Each crate includes:

- Pole top circuit breaker.
- Pole mounting bracket.
- Six bushing boots with clamping rings attached.
- Six tubes of electrical silicone grease to fill the bushing boots.
- One clamping ring spanner to fit boots to the bushings.
- A mounting kit containing nuts and bolts for bolting the mounting bracket to the circuit breaker, pole clamps and bolts if purchased.
- Control cubicle (which will normally contain two batteries unless arrangements have been made to ship batteries separately).
- Control cable.
- Six cable tails (where supplied by the manufacturer) pre-terminated with either a threaded lug to screw into the bushings directly or with a flat lug for bolting to a palm already fitted onto the bushings.

On receipt the contents should be checked for shipping damage and the manufacturer informed immediately if any is found.

Unpacking Procedure

Tools required:

- Wrecking bar to remove nails.
- Four D shackles, two slings and crane with a safe working load of 300kg to lift the circuit breaker.
- Screw Driver or Battery Drill with 8mm socket.
- 16mm Spanner or Socket.

Procedure:

- Remove top of crate and lift out the control cable and bushing boots. Store carefully in a clean dry place.
- Unscrew and remove the four (4) screws located on the wall of the crate. The mounting bracket, mounting kit and the two pieces of wood that the screws have just been removed from are all secured together. Lift the complete mounting bracket out of the crate.

Caution
Take great care not to drop the bracket, which weighs nearly 30kg, onto the circuit breaker.

- Fit D-shackles to the lifting points on the circuit breaker and lift out of the crate onto the ground using the crane.
- Lay the crate down on its side and remove the HV cables.
- Remove the two bolts securing the control cubicle and slide the unit from the crate.

WARNING
The control cubicle weighs approximately 45 kg

Control Cable Connection

When installing or testing the circuit breaker it is necessary to connect and disconnect the control cable.

To do this successfully requires the correct technique that is explained below with reference to Figure 27 (page 91) and Figure 28 (page 92).

- Power down the control cubicle by switching off all MCB's. This should be done whenever connecting or disconnecting the control cable from the control cubicle
- To connect: hold the plug by the long sides, check orientation, gently locate it on the socket and push firmly home. Check it has locked by wriggling the plug. If the plug cannot be pushed on with moderate force then it has not been located properly. Heavy force is never required.
- To disconnect: hold the plug by the short sides and grip hard to release the clips inside the plug (not visible). Wriggle to allow the clips to release and then pull the plug out.

Caution
Never pull the plug out by the cable.

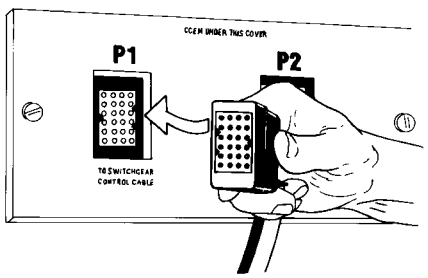

Check orientation
Figure 27: Connecting the control cable (1)

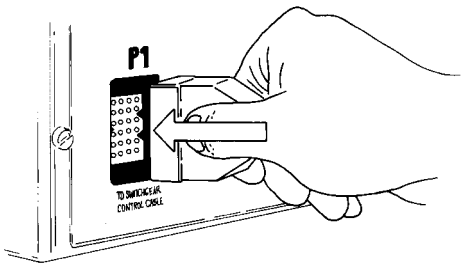

Locate and push home

Figure 28: Connecting the control cable (2)

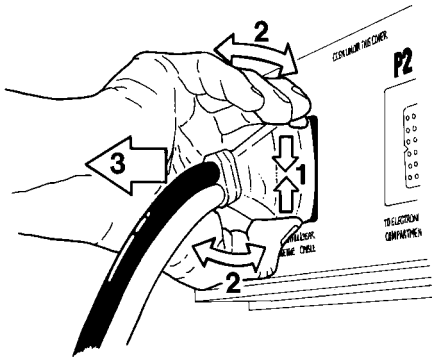

1. Grip and squeeze to open locking clips.
2. Wriggle to release.
3. Pull.

Figure 29: Disconnecting the control cable

Testing & Configuring

The tests can be carried out on site or in the workshop as preferred.

Unpack the crate as above and put the HV cables, boots and the control cable in a clean safe place where they will not be damaged or soiled. Make a temporary earth connection between the control cubicle and the circuit breaker, this need only be 1mm² copper wire.

Unbolt one of the compartment cover plates from the bottom of the circuit breaker and connect the control cable to plug P1 on the Switch Cable Entry Module (SCEM) located inside the compartment. See Figure 27 (page 91) for the correct way to connect the control cable.

- If desired the LV auxiliary supply (if applicable) can be connected as shown in Figure 31 (page 96).

If the circuit breaker has an integrated power transformer then a temporary auxiliary supply can be made by connecting a fused and isolated twenty-four Volt AC or thirty-six Volt DC **(24VAC or 36VDC)** supply between terminals 2 and 3 of the terminal block in the mains compartment. A fused, **isolated,** 36 Volt battery is a good way to do this.[1]

Turn on the battery and aux supply circuit breakers at the top of the control cubicle and carry out the following tests:

1. Manual trip and close of the circuit breaker.
2. Insulation test the high voltage connections to earth to check for shipping damage on the high voltage side of the circuit breaker.
3. Configure the protection settings.
4. Perform primary current injection as required.
5. Perform secondary current injection as required using a Test and Training Set (TTS).
6. The radio/modem plate can be unscrewed and a radio or modem fitted, connected and tested as required.

Caution

If a HV insulation test is to be applied then check the rating plate to determine if an internal VT is fitted. If so take extreme care not to apply a voltage greater than the rating of the VT across its terminals. If such a voltage is applied, damage to the equipment will occur. Once the circuit breaker has been connected to a powered-up control cubicle do not disconnect or turn off the control cubicle for at least ten minutes after the last trip or close.

- Attend to the battery using the care instructions given in "Battery Care" (page 104) .

Caution

Connecting the batteries with reverse polarity will cause damage to the electronic systems.

- An application note detailing workshop and field test procedures is available. Contact your agent or distributor.

It may be desirable at this time to fit the cable tails and surge arresters to the circuit breaker. See Figure 30 (page 95).

Transport to Site

If the unpacking and testing was carried out in the workshop then the circuit breaker and control cubicle must be transported safely to site. It is important the following steps are carried out:

- Turn off all control cubicle circuit breakers and disconnect all auxiliary power supplies.

Disconnect the control cable from both circuit breaker and control cubicle and put back the cover plate on the bottom of the circuit breaker.

- Either remove the batteries from the control cubicle and safely transport separately or secure the batteries in the control cubicle.

1. This supply connects directly to the CAPM and cannot be turned off by the control cubicle miniature circuit breakers.

- Transport the circuit breaker, control cubicle and all parts in a safe and secure manner to site.

Site Installation

Tools Required

- Torque wrench and metric socket set, normal engineers tools.
- 24mm Open ended drive to fit the torque wrench (commonly known as a “Claw Foot”). This is only required with 630A cable tails which screw directly into the bushings and are tightened by a 24mm lock-nut.
- Standard 300gm cartridge applicator, (Caulking Gun).
- Bushing boot clamping spanner, (supplied by the manufacturer).
- Tools to prepare pole as required.
- Crane or other lift for circuit breaker and control cubicle, four D shackles and slings. A 1m spreader bar is also useful, if the surge arresters are to be fitted onto the circuit breaker tank, to keep the slings away from the surge arresters when lifting.

Parts Required (Not supplied by the manufacturer)

- Two 20mm galvanised or stainless steel bolts with washers and nuts etc. to bolt mounting bracket to power pole. See Figure 34 (page 100). If the optional pole clamp has been purchased this is not required.
- Mounting parts for control cubicle. Either 20mm steel strapping or 10mm galvanised or stainless steel bolts, nuts, etc. See Figure 51 (page 153).
- Fixing hardware for control cable. This is standard 25mm sheathed conduit and can be fixed to the pole with ties, straps, P-clips or saddles.
- Earth wire and lugs for the earthing scheme and parts for LV mains auxiliary power connection. See Figure 31 (page 96), Figure 33 (page 99).
- 20mm sealing cable entry glands to suit auxiliary supply mains cables, 16mm sealing cable entry glands to suit aerial or communications cable as required.
- Aerial, aerial feeder cable and surge arrester as required if a radio is fitted (unless supplied by the manufacturer).
- Cable ferrites for IOEX cables (If IOEX is fitted).

Site Procedure

To erect and test the circuit breaker carry out the following steps, mounting details are given in Figure 34 (page 100):

1. Transport to site and carry out testing prior to erection as required.
2. Connect cable tails and surge arresters before elevating or raising the circuit breaker. See "Cable Tail Connections" (page 94) .
3. Ensure that the pole is of sufficient strength to support the circuit breaker. A structural engineer may be needed to calculate the stresses involved.
4. Securely mount the circuit breaker mounting bracket on the power pole.
5. Lift the circuit breaker into position and lower it onto the mounting bracket so that it sits on the mounting bracket. See Figure 34 (page 100).
6. Bolt the circuit breaker to the mounting bracket with the four 12mm nuts and bolts provided. Tighten to 50 Nm.
7. Complete the high voltage connections as shown in Figure 32 (page 98) or as appropriate for the site installation.
8. Lift the control cubicle into position and bolt or strap to the power pole. Note that the control cubicle mounts are provided with key holes so it can be lifted onto the 10mm bolt and simply slid into position.
9. Run the earth connections as shown in Figure 33 (page 99).

WARNING
It is vital that the earthing scheme described is carried out.

10. For LV mains supply run auxiliary wiring as shown in Figure 33 (page 99). Make connection inside control cubicle as shown in Figure 31 (page 96). **Make sure the LV mains cable is run behind the equipment panel.**

Caution
It is vital that the scheme described above is carried out.

11. For LV supply from a dedicated transformer supplied by the utility, connect as shown in Figure 35 (page 101).
12. For Integrated supply from an external transformer, connect as shown in Figure 35 (page 101).
13. Unbolt the compartment cover plate with the blanking plate from the bottom of the switchgear. Remove the blanking plate and fit the control cable in its place. Connect the control cable to plug P1 on the Switch Cable Entry Module (SCEM) located inside the compartment, put back the compartment cover. See Figure 27 (page 91) and

Figure 29 (page 92) for the correct way to connect/disconnect the control cable.

14. Run the control cable from the circuit breaker down to the control cubicle.
15. Power down the control cubicle by switching off all MCB's. Note that this should be done whenever connecting or disconnecting the control cable from the control cubicle. Remove the cover of the control cubicle and feed the control cable through the bottom of the control cubicle and connect to port P1 on the Control Cable Entry Module (CCEM), as shown in Figure 2 (page 24).
16. Fit batteries to the control cubicle.

Caution
Connecting the batteries with reverse polarity will cause damage to the electronic systems.

17. Power up control cubicle and test operation of circuit breaker.
18. Mount the aerial and run aerial feed to control cubicle or run external communications cable to control cubicle. Use the cable entry shown in Figure 52 (page 154) with a sealing 16mm gland.
19. The circuit breaker is now ready for energising and commissioning. This should include setting the frequency, power flow direction and the phasing. See Section 12 (page 69).

Cable Tail Connections

HV cables are supplied in one of two forms:

- Fitted with a lug to be bolted to a factory fitted palm on the end of the bushing (250 or 400A).
- Fitted with a threaded termination that is screwed into the bushing (630A).

In both cases the procedure is to attach the cable to the bushing and then cover with the bushing boot as detailed in the following sections, refer to Figure 30 (page 95).

- The bushing is supplied clean and protected with a plastic cap. Ensure this is undisturbed and the bushing body and tin plated central conductor or palm are clean and undamaged. If the bushing has become soiled then clean with methylated spirits. Sand or brush the aluminium palm to remove oxide.
- Grease the bushing and the conductor with the silicone grease provided (part number LUB058044).
- Unpack the cable tail and bushing boots. Check that the cable termination and the boot are clean and undamaged. If necessary, clean with methylated spirits.
- Push the boot down the cable to a distance approx 1 metre from the termination (place a small amount of grease on the closed end of the boot to assist the boot to slide down the cable). Fill the bushing boot with the silicone grease provided, starting at the closed end and finishing approx 60mm for the open end of the boot. **Hint** - as you fill the boot with grease, keep sliding it down the cable as this pushes the grease up into the boot.
- For cables terminated with a screw thread, ensure the thread, locknut and bushing surfaces are clean and dry. Screw the tail into the bushing by turning the whole cable tail. Tighten to 50 Nm using a spanner across the brass locknut fitted. Take care to apply only twisting forces to the terminal (no shear force).
- For cables terminated with a lug, smear with aluminium jointing paste and bolt the lug to the bushing palm with the bolt provided and tighten to a maximum of 62-65 Nm.
- Grease the surface of the bushing, slide the bushing boot down over the bushing while rotating the boot to and fro. Fix into place using the clamping ring and spanner provided. The bottom of the boot should be firmly seated on the top of the circuit breaker tank. During the clamping process silicone may bleed from the top of the boot where the cable tail comes out. This is quite normal and can be assisted by sliding a small screwdriver into the boot alongside the cable tail. Silicone grease will also come out around the bottom of the bushing. This is quite normal. Wipe off excess silicone grease with a clean cloth.

The insulated cables supplied by the manufacturer are rated for use at the following voltages and ratings:

Up to 15kV	100mm minimum clearance phase to phase or phase to earth
>15kV to 38kV	150mm minimum clearance phase to phase or phase to earth

Smaller clearances may cause degradation of cable insulation.

Surge Arrester Mounting and Terminating

The recloser is type tested for Impulse Withstand Voltages up to 170kV depending on the model.See "Ratings" (page 5)

When there is a possibility lightning or network switching conditions can produce peak voltages in excess of 70% of the Impulse Withstand Voltage, the manufacturer recommends the use of suitably rated surge arresters connected to each terminal of the recloser.

The arresters should be mounted on the mounting brackets supplied by the manufacturer and earthed as described in Figure 33 (page 99). If the

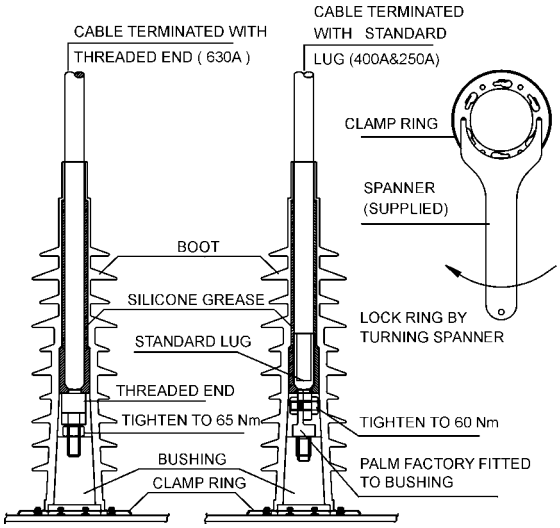

Figure 30: Cable Tail Installation

arresters are not mounted close to the recloser the protection provided by the arresters is reduced.

Lightning induced damage to the recloser or PTCC void the warranty if surge arresters are not fitted.

Mounting brackets are provided for surge arresters on the tank of the circuit breaker. This is illustrated in Figure 32 (page 98) and Figure 34 (page 100).

The surge arresters can be mounted on top of the brackets or clamped to the side of the brackets using the holes provided. Top holes are 12mm diameter, side holes are 16mm diameter. In this way most types of surge arrester can be accommodated.

The brackets are tilted to maximise phase/phase clearance. The user should check that phase/phase and phase/earth clearance will be sufficient for their particular surge arresters and line voltages. For some types of side clamping surge arresters, the phase/earth clearance may be insufficient at the centre phase on the pole side at higher voltages. In this case the surge arrester can be mounted on the side of the power pole or an increased clearance circuit breaker mounting bracket fitted.

Connections from the surge arresters to the cable tails can be made by stripping off the cable tail insulation and using a parallel or “T” type clamp to make the connection to the cable tail. The connection should be made far enough up the tail so that phase/phase and phase/earth clearances are maintained. The cable tail is watertight, so additional water blocking where the insulation has been removed is not required, however it is good practice to tape the joint to maintain the cabling system insulation.

Protection of Radio Equipment

It is highly advisable to connect a gas discharge type of surge arrester in the aerial feed to the radio. Failure to do so will result in loss of radio and control electronics protection which could lead to complete electronic failure due to lightning activity.

Caution
A failure of this nature is not covered by the products general warranty arrangements.

A feed-through or bulkhead type arrester fitted to the bottom of the control cubicle is ideal. If fitted internally the surge arrester should be earthed to an equipment panel mounting stud by the shortest possible wire. Holes are provided for a Polyphasor, IS-B50 type bulkhead surge arrester. See Figure 51 (page 153). A suitable type of bulkhead mount surge arrester is specified in Appendix H (page 139)).

If a surge arrester is not fitted then the co-ax earth screen should be earthed to an equipment panel mounting stud by the shortest possible wire.

IOEX Cabling

Turn off the controller before connecting the IOEX to the CAPM.

To ensure electromagnetic compatibility compliance is maintained, ferrite filters should be fitted to all input/output IOEX cables. A suitable type of ferrite is specified in Appendix H (page 139).

The wiring to the IOEX must be shielded with the shield bonded to the control cubicle stud only. The manufacturer recommends shielded 12 pair data cable with a separate common for inputs and outputs. Insulation must withstand a minimum of 150 V DC.

Separate the CAPM cable from input/output wiring as much as possible.

Recloser Earthing

Figure 33 (page 99) shows the earthing common to all installations.

This arrangement earths the circuit breaker frame and the surge arresters directly to earth through a *main* earth *bond* consisting of a copper conductor of at least 16 sq. mm. Any surges will flow down this path.

Caution

Do not earth surge arresters by a different path, doing this may cause damage to the control electronics or circuit breaker. Also, any aerial should be bonded to the circuit breaker or the *main* earth *bond*.

The control cubicle is connected to this *main* earth *bond* by a tee-off. The control cubicle electronics are internally protected from potential differences which may occur between the circuit breaker frame and control cubicle frame whilst surge currents are flowing down *the main* earth *bond*. No other connections to earth from the control cubicle are allowed since surge currents will also flow in those paths. Follow this arrangement on both conducting and insulating power poles.

Keep the *main* earth *bond* physically separated from the control cable, as they run down the power pole, by the maximum spacing available. This should be at least 200mm for wood and concrete poles and 150mm for steel poles.

LV Auxiliary Power from Mains

Where LV mains are connected to the control cubicle to provide auxiliary power the connection **must** connect the neutral of the LV system to a tee-off from the *main* earth *bond* as shown in Figure 33 (page 99).An LV surge arrester **must** also be fitted from the LV phase connection to this tee-off.

This connection scheme bonds the LV and HV earths and so protects the primary insulation of the auxiliary supply transformer in the control cubicle when surge currents are flowing.Fit additional LV surge arresters to all the other LV phases (if they exist), to balance the supply for other users connected to the LV system.

If local conditions or wiring rules prohibit bonding the HV and LV systems in this way, providing the auxiliary supply to the control cubicle from the LV mains system is not possible. Instead, use one of the alternative arrangements detailed below.

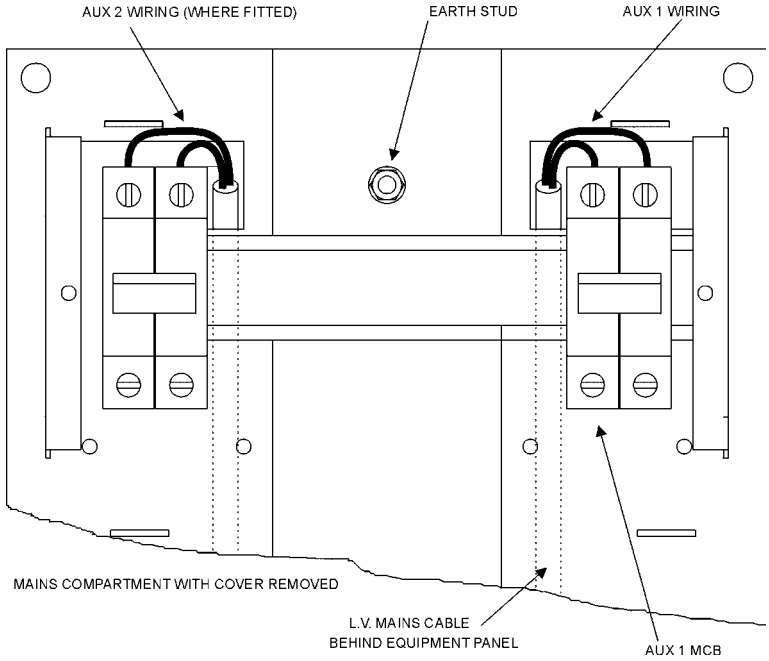

Figure 31: LV Auxiliary Supply Connection

LV Auxiliary Power from Dedicated Utility Transformer

Figure 35 (page 101) shows wiring and earthing if a dedicated transformer is supplied by the utility. Note that this should not be used to supply any other equipment without consulting the manufacturer to ensure that no hazard is caused to the control cubicle electronics.

Figure 35 (page 101) shows that the transformer and any steelwork is earthed to the switchgear tank and that one side of the transformer secondary is earthed to the earth stud on the equipment panel inside the control cubicle.

Auxiliary Power from Integrated Transformer

The manufacturer can provide a dedicated voltage transformer either inside or outside the circuit breaker tank which connects directly into the control electronics. This is called an *Integrated Auxiliary Supply*.

Internal transformers are factory fitted and require no installation from the utility.

An external transformer is mounted on the front of the tank as shown in Figure 35 (page 101) which also shows suggested HV connections. The secondary of the external transformer connects into the SCEM on the underside of the circuit breaker. To connect the transformer secondary remove the SCEM compartment cover plate, pass the cable which is pre-fitted with a cable gland through the hole, secure the gland, connect the auxiliary supply to the screw terminal block on the SCEM and replace the compartment cover.

No additional earthing for Integrated Auxiliary Supply is required in addition to the common earthing shown in Figure 35 (page 101).

Transformer Switching

If the circuit breaker application involves switching unloaded transformers, ensure that the system configuration is not prone to repetitive re-strike.

Check with the manufacturer representative if further advice is required.

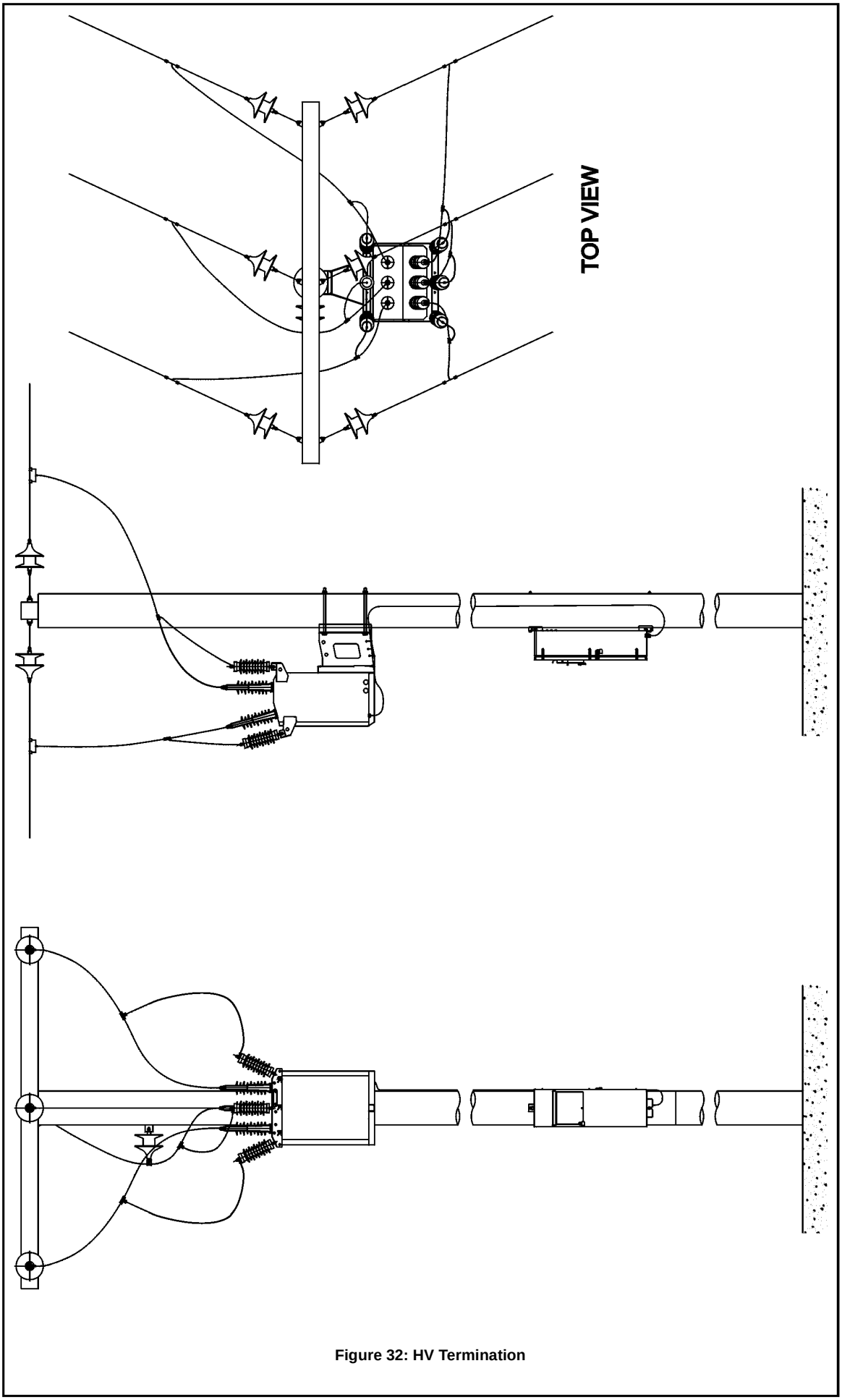

Figure 32: HV Termination

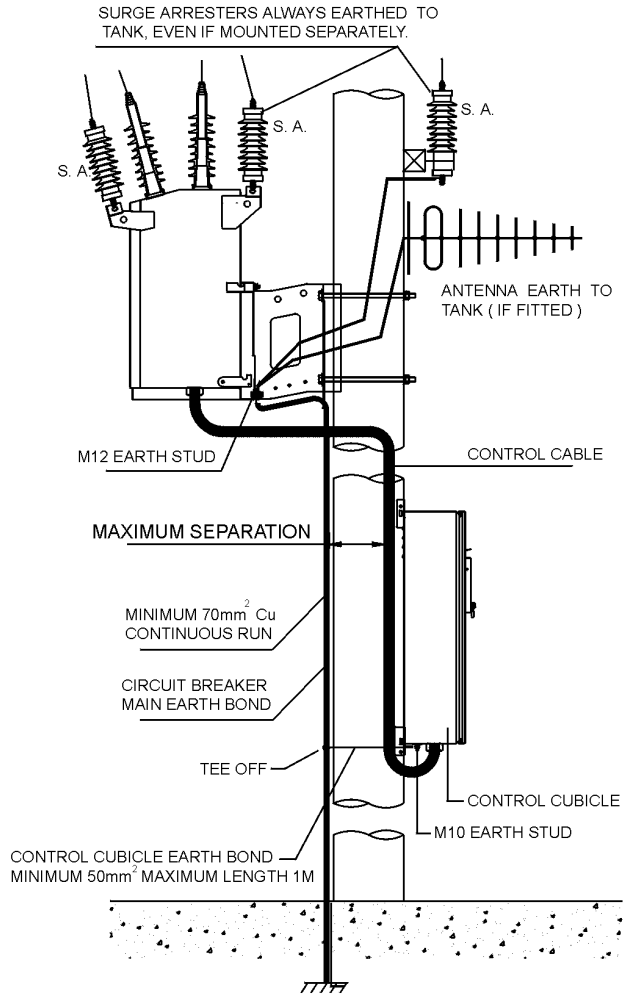

COMMON EARTHING FOR ALL INSTALLATIONS

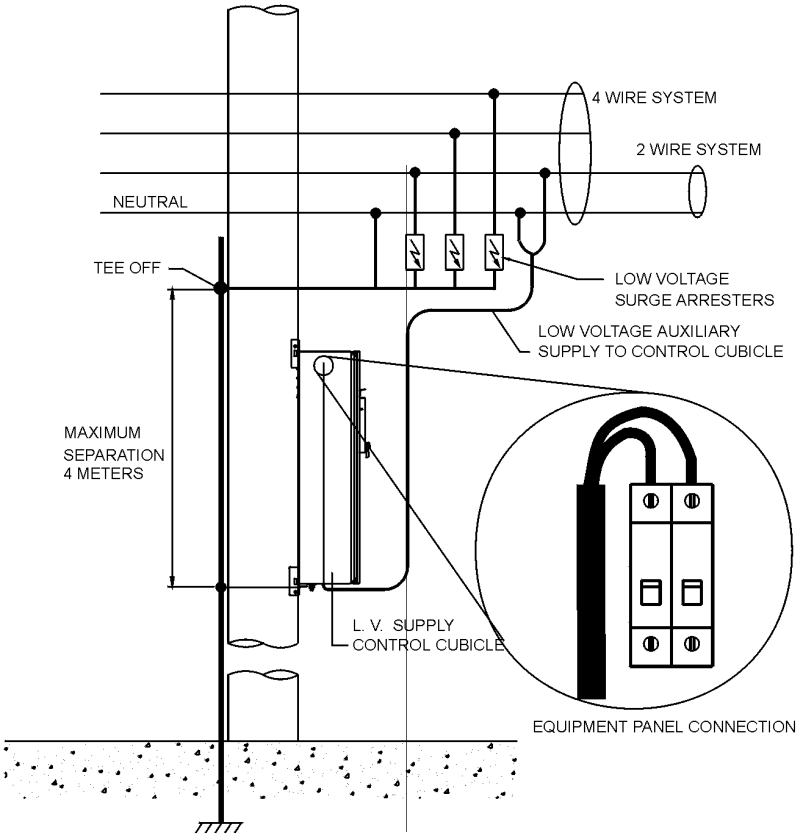

L.V. SUPPLY FROM 2 WIRE OR 4 WIRE MAINS SYSTEM

Figure 33: Common earthing and LV supply

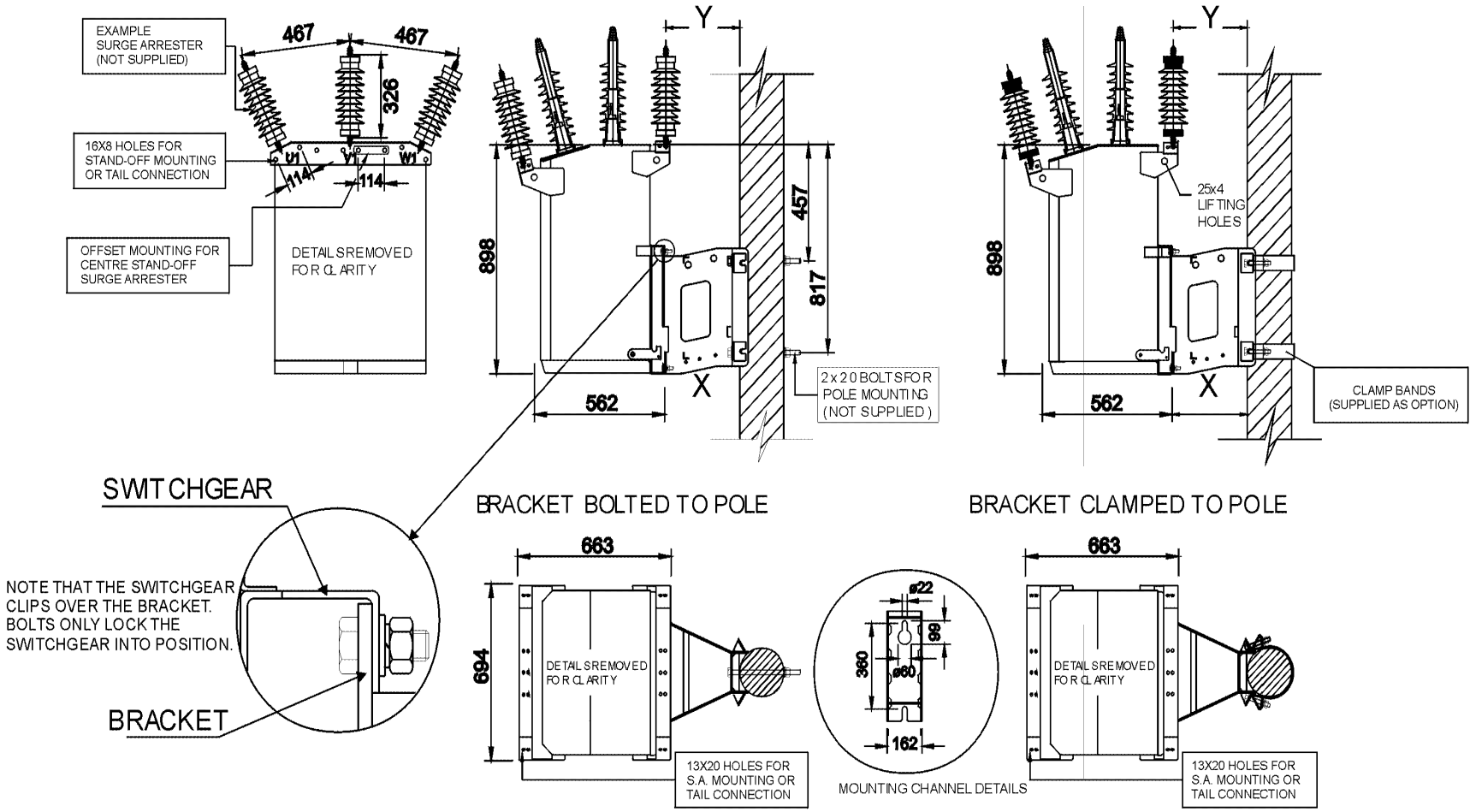

Figure 34: Circuit breaker mounting and dimensions

DIMENSION X (mm) = DISTANCE FROM POLE FACE TO SWITCHGEAR

DIMENSION Y (mm) = DISTANCE FROM POLE FACE TO CENTRE OF SURGE ARRESTER MOUNTING HOLE.

	BRACKET "B"		BRACKET "C"		BRACKET "D"	
	X	Y	X	Y	X	Y
N15	315	310	490	485	160	NA
N27	315	310	490	485	160	NA
N38	315	NA	490	485	NA	NA

NOTES:

1) TYPICAL SURGE ARRESTER CLEARANCES HOWN. SUPPLY UTILITY MUST ENSURE THAT SUFFICIENT TOCLEARANCE WILL BE ACHIEVED ON ACTUAL INSTALLATION.

2) MINIMUM ROUND POLE DIAMETER TO FIT BRACKET IS 190mm.

3) BRACKET IS SUITABLE FOR FITTING TO RECTANGULAR POLES.

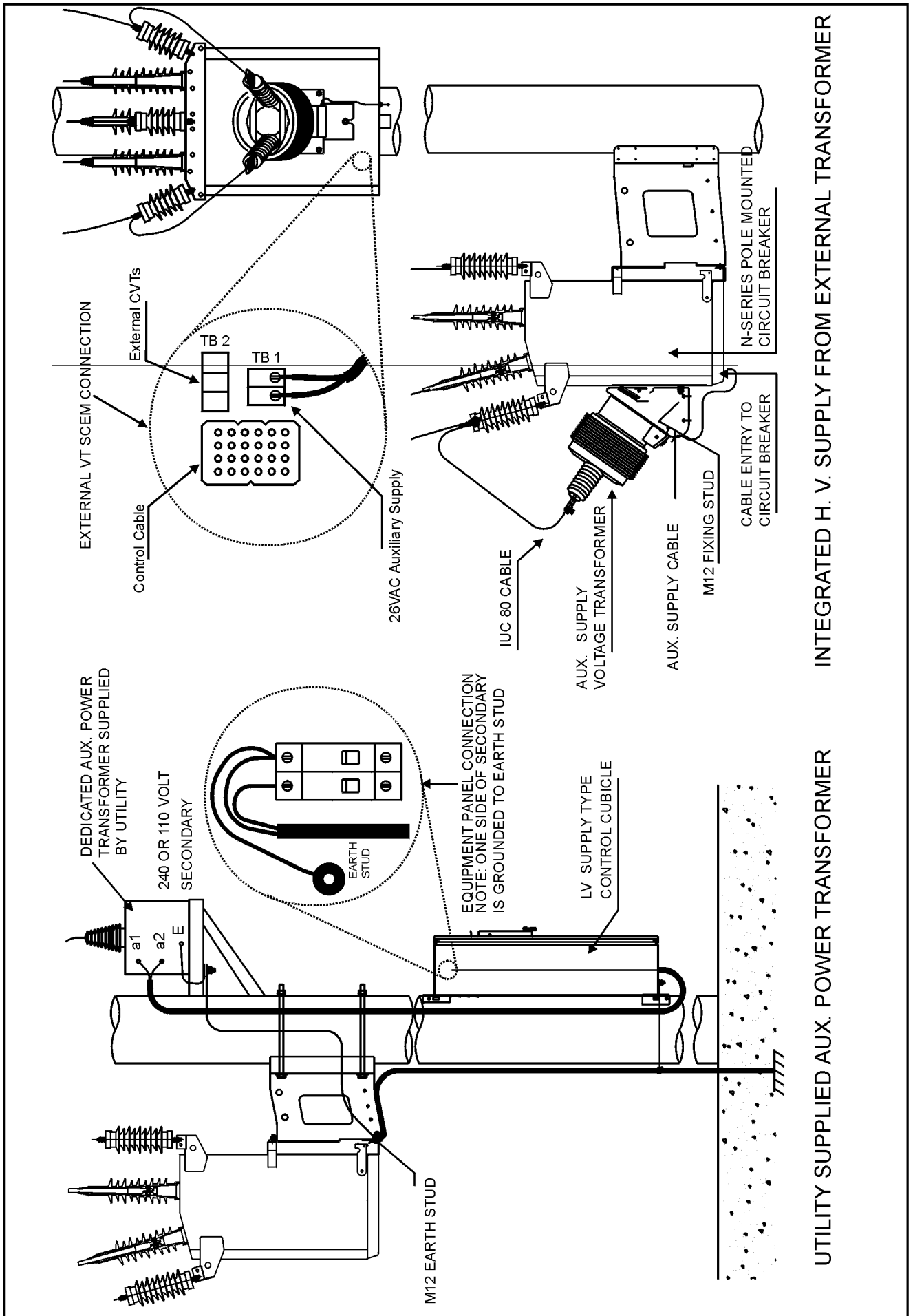

Figure 35: Utility aux transformer and integrated external transformer

20 Maintenance

Maintenance is carried out using standard electricians' and mechanics' tools.

Circuit Breaker Maintenance

No user maintenance of the circuit breaker mechanism is required.

The circuit breaker should be returned to the manufacturer for refurbishment if the mechanical duty or breaking duty is exceeded. This is checked by examining the remaining contact life on the Operator Control Panel. When the remaining contact life in any phase approaches zero, the circuit breaker is worn out.

Every five years the bushings should be checked, cleaned if necessary and the pointer checked to ensure it is free from mechanical obstructions. In areas of high atmospheric pollution more frequent cleaning may be appropriate.

At suitable intervals check the gas low alarm is not showing on the operator control panel. If gas low is showing, recharge the circuit breaker SF_6 using a gas fill adaptor (see below).

Circuit Breaker SF_6 Recharging

Circuit Breaker SF_6 recharging is carried out using a Gas Fill Adaptor (GFA) and a standard size-D SF_6 cylinder. See Appendix H (page 139) for these part numbers.

The circuit breaker is refilled to a pressure of 35kPa on the gauge corrected by +0.46kPa for every degree Celsius above 20° Celsius and -0.46kPa for every degree below 20° Celsius. For altitudes above 1000m the gauge pressure should be corrected for altitude.

The recharging procedure is as follows:

- Calculate the required pressure to suit the ambient conditions (see above).
- Remove the cap from gas fill valve on the lower back of circuit breaker.
- Connect the gas fill adaptor to the SF_6 cylinder and slowly open the valve on the cylinder to bleed gas into the hose. Close valve on the gauge assembly when air in the hose has been flushed.
- Check regulator output pressure is between 50-100kPa. If it needs to be reduced, wind anti-clockwise and release a small amount of gas to check setting.
- Push in the knurled ring on the gas fill valve and plug in the mating part of the gas fill adaptor hose. The circuit breaker gas pressure should now be visible on the pressure gauge.
- Open the valve on the gauge assembly to bleed gas into the circuit breaker. This operation will be carried out slowly and you must take care not to over-pressurise the circuit breaker. A relief valve is fitted to the gas fill adaptor for safety purposes, it will not protect the circuit breaker from overpressure. If excess gas is put into the circuit breaker it can be released by disconnecting the gas fill adaptor from the gas cylinder.
- The gauge reads high while gas is flowing, so you will have to monitor the pressure during the filling process. Do this by turning off the valve on the gauge assembly at regular intervals to get the correct pressure reading.
- At correct pressure, turn off gauge assembly valve and then the cylinder valve.
- Unplug the gas fill hose valve by pushing in the knurled ring on the gas fill valve.
- Remove the old 'O' ring from the gas fill valve and discard. Clean the 'O' ring seat on the gas fill valve and cap with a clean lint-free cloth. Grease with DOW111 silicone grease and fit a new 'O' ring. See Appendix H (page 139) for suitable parts. Replace and re-tighten cap.

It is recommended you use the Gas Fill Adapter for recharging. However, other SF_6 charging equipment can be connected to the circuit breaker with a Swagelok fitting, part number B-QM2-S-2PF.

Caution

Any non manufacturer's equipment must be suitable for the purpose, i.e., is airtight and won't allow over pressure. The Swagelok fitting is not suitable for permanent sealing and must be disconnected after the charging operation is complete. The permanent seal is formed by the o-ring in the base of the fill valve sealing onto the cap. This o-ring must be replaced after any recharging operation.

Control Cubicle Maintenance

Maintenance of the control cubicle is required every five years to carry out the work given below.

Control Cubicle Cleaning

Check for excessive dirt on the cubicle, particularly the roof, and clean off.

Ensure the louvres are not blocked and that air vents and water drainage holes in the base are open.

Battery Replacement

Battery replacement is recommended after a period of five years.

The procedure is:

- Turn off the battery circuit breaker.
- Unplug batteries and replace with new batteries.

Caution
Ensure that polarity is correct.

- Turn on the battery circuit breaker and ensure that “Battery Normal status”, is restored on

SYSTEM STATUS-SWITCHGEAR STATUS

Protection and Operation Check

Bypass the circuit breaker and carry out primary injection testing to check circuit breaker protection and operation.

Alternatively use a Test and Training Set to perform secondary injection. The Test and Training Set manual gives procedures for in-service and bypassed testing of both the control cubicle and the circuit breaker.

Door Seal

Check the door sealing rubber for perishing or undue hardening. If necessary renew the seal.

Battery Care

The battery is predicted to provide good performance for the recommended five year service period. This is based on the battery manufacturer's data. No battery warranty is given by the manufacturer. In some environments, an exceptionally high control cubicle temperature can mean a shorter battery replacement period. Consult the manufacturer if you suspect your environment to be excessively hot.

Once in service, batteries need little care. Procedures for storage and other contingencies are as follows:

- Batteries should be stored at a temperature of between -10°C to 30°C and cycled every six months. Batteries should be stored for a maximum of one year.
- Batteries should be cycled prior to putting into service if they have not been cycled within three months. When shipped by the manufacturer the batteries will have been cycled within the previous 30 days.
- If the batteries become exhausted in service and are left for more than two weeks without auxiliary supply being restored to the control cubicle they should be taken out, cycled and have their capacity checked before being returned to service.

To cycle a battery, discharge with a 10 Ohm 15 Watt resistor to a terminal voltage of 10V. Next, recharge it with a voltage regulated DC supply set to 13.8V. A 3A current limited supply is appropriate.

Battery type is given in Appendix H (page 139). More information on the battery care is available from the battery manufacturer.

Caution
These batteries are capable of supplying very high currents. Always turn off the battery circuit breaker before connecting or disconnecting the batteries in the cubicle. Never leave flying leads connected to the battery.

Fault Finding

If there is a problem it may be explained in "Abnormal Operating Conditions" - page 106. If not, the fault must be traced as follows.

Faults can only arise in one of the following:

- Circuit Breaker.
- Control Cable.
- Control Cubicle.

The best way to determine which part is faulty is to use a Test and Training Set to isolate the faulty part.

If a Test and Training Set is not available then use the circuit breaker check suggested below and employ substitution techniques to determine where the fault lies:

- Faulty circuit breaker units may be returned for factory repair.
- Faulty control cables should be replaced.
- Faulty control cubicles can be checked and repaired as indicated below.

Control Cable Check

The control cable is a one-to-one cable. This means a direct end-to-end test of all the connections in the control cable can be made with a DVM set to resistance.

All pins should show a one-to-one connection less than 0.2 Ohms with no shorts between pins.

Circuit Breaker Check

Connections to the circuit breaker are available on the underside of the circuit breaker and/or on the control cable connector where it plugs into P1 on the Control Cable Entry Module (CCEM) at the bottom of the control cubicle. Some (but not all) of these connections can be simply tested with a hand held DMM. This can show up some circuit breaker faults with a simple test.

The procedure is to test the resistance between the pins on the control cable.

Caution
Do not apply any tests to the circuit breaker other than those shown in the following table

Pins	Test	Use	Expected Result
1 to 5	Resistance	Trip solenoid.	1 Ohm +/- 0.5 Ohm
2 to 5	DC Voltage	Auxiliary supply transformer (if fitted). This has been rectified internally so a DC full wave rectified signal is present.	25 to 45 VDC measured with a true RMS meter **when the transformer primary is energised.**
3 to 5	Resistance	Close solenoid.	2 Ohm +/- 0.5 Ohm
4 to 8	Resistance	W phase CT	13 Ohm +/- 3 Ohm
12 to 16	Resistance	V phase CT	13 Ohm +/- 3 Ohm
20 to 24	Resistance	U phase CT	13 Ohm +/- 3 Ohm
21 to 11	Resistance	Auxiliary travel switch, closed indicates the circuit breaker is tripped	< 5 Ohm when circuit breaker is tripped. >100kOhm when circuit breaker is closed
22 to 11	Resistance	Auxiliary travel switch, closed indicates the circuit breaker is closed	< 5 Ohm when circuit breaker is closed. >100kOhm when circuit breaker is tripped

Circuit Breaker test

Control Cubicle Check

Fault finding within the control cubicle involves determining whether the fault lies in the electronic modules, the wiring or elsewhere. The electronic modules are user replaceable items. Other faults require the equipment panel or the control cubicle to be returned to the factory. Appendix I (page 141) gives the control cubicle wiring schematics to assist in re-assembly of the control cubicle wiring.

A suggested fault finding approach is as follows:

- If the microprocessor running LED on the operator panel is blinking then the CAPM micro and the Operator Panel Sub-system (OPS) microprocessor are running. If the operator display does not operate there is a problem with the display itself and the OPS should be replaced.
- If the display is operating, check the SYSTEM STATUS-SWITCHGEAR STATUS page for an indication of any power supply problems (Aux Supply Fail and/or Battery OFF) which can be traced and rectified.
- If the display indicates switchgear disconnected or if there are operating problems then the control cable and the CCEM should be inspected and replaced as required.
- If the microprocessor running LED is not blinking, the most likely problem is loss of power. Check the presence of battery voltage on the battery circuit breaker and the presence of aux supply on the aux supply circuit breaker and rectify as required.
- If power supply is present then attempt to go on-line with WSOS to determine whether the CAPM is functioning correctly. Replace the CAPM or Operator Panel Sub-system as required.
- If this does not rectify the problem then the equipment panel should be returned for factory repair.

Replacement of Electronic Modules

Electronic modules are user replaceable as detailed below. These modules can be damaged by static electricity, water, dirt and mishandling. Therefore replacement should only be carried out in a suitable place such as in a workshop and carried out by competent personnel.

Access to the Control Cable Entry Module (CCEM) is by removing its cover plate held in place by fixing screws. To remove the CCEM, hold the ¼ inch spacer underneath the board with a spanner and remove the four M4 screws.

The electronics compartment houses the Control and Protection Module (CAPM) and the trip and close capacitors. The compartment cover itself forms part of the Operator Panel Subsystem (OPS). For access to these parts refer CAPM Replacement Procedure in the service manual.

See Appendix I (page 141) for control cubicle wiring schematics.

Replacement of Cables

It is easier to fit and remove cables from the cable duct if they are lightly greased with silicone grease.

Fitting or Replacing Heater

For models fitted with a control cubicle heater, Figure 44 (page 149) shows the wiring. The thermostat is located inside the electronics compartment and is set to +15°C for correct operation.

Abnormal Operating Conditions

The operation of the capacitor charging inverter can be affected under abnormal conditions such as when the battery capacity is very low. The following features are used to protect the controller in this situation while still allowing the circuit breaker to keep operating.

Low Power Mode

When the batteries are nearly exhausted, the controller will change its capacitor charging mode from normal to low power. In low power mode the controller takes longer to charge the capacitors and the radio supply is shut down. A ‘Low Power Mode’ event is logged whenever this happens.

When a trip occurs in low power mode, the recloser will go to lockout if the capacitors cannot be recharged quickly enough. Operator close and trip operations can be performed, but at a longer time interval than normal. If an operator trip or close request is denied, a ‘Cap Chrg’ event will be logged.

To return to normal power mode, either replace the batteries or re-establish the auxiliary supply for a minimum of 15 minutes.

Excess Close Operations

During testing it is possible to carry out so many trip/close operations that the capacitor charging inverter shuts itself down before it overheats. It takes more than 20 operations within a minute to do this and is not going to happen while in service (it only happens during excessive testing).

When this happens the inverter shuts down for 5 minutes and a ‘Cap Excess Closes’ event is logged. During this time all trip/close requests will be denied.

Appendix A IEC255 Inverse Time Protection Tables

The Inverse time protection curves in this appendices are as defined by IEC255 standard where “I” is the actual current expressed as a multiple of the trip current set by the user:

- Type A - Inverse, for which equation is:Time to Trip = $0.14 / (I^{0.02} - 1)$
- Type B - Very Inverse, for which equation is: Time to Trip = 13.5 / (I-1)
- Type C - Extremely Inverse, for which equation is:Time to Trip = $80 / (I^2 - 1)$

Tables for the times to trip for each of these curves are given below.

Setting Current Multiple	Inverse Time (secs)	Very Inverse Time (secs)	Extremely Inverse Time (secs)
1.10	73.37	135.00	380.95
1.50	17.19	27.00	64.00
2.00	10.03	13.50	26.67
2.50	7.57	9.00	15.24
3.00	6.30	6.75	10.00
3.50	5.52	5.40	7.11
4.00	4.98	4.50	5.33
4.50	4.58	3.86	4.16
5.00	4.28	3.38	3.33
5.50	4.04	3.00	2.74
6.00	3.84	2.70	2.29
6.50	3.67	2.45	1.94
7.00	3.53	2.25	1.67
7.50	3.40	2.08	1.45
8.00	3.30	1.93	1.27
8.50	3.20	1.80	1.12
9.00	3.12	1.69	1.00
9.50	3.04	1.59	0.90
10.00	2.97	1.50	0.81
10.50	2.91	1.42	0.73
11.00	2.85	1.35	0.67
11.50	2.80	1.29	0.61
12.00	2.75	1.23	0.56
12.50	2.70	1.17	0.52
13.00	2.66	1.13	0.48
13.50	2.62	1.08	0.44
14.00	2.58	1.04	0.41
14.50	2.55	1.00	0.38
15.00	2.52	0.96	0.36
15.50	2.48	0.93	0.33
16.00	2.46	0.90	0.31
16.50	2.43	0.87	0.29
17.00	2.40	0.84	0.28
17.50	2.38	0.82	0.26
18.00	2.35	0.79	0.25
18.50	2.33	0.77	0.23
19.00	2.31	0.75	0.22
19.50	2.29	0.73	0.21
20.00	2.27	0.71	0.20

IEC255 Inverse Time Protection table

Setting Current Multiple	Inverse Time (secs)	Very Inverse Time (secs)	Extremely Inverse Time (secs)
20.50	2.24	0.69	0.19
21.00	2.23	0.68	0.18
21.50	2.21	0.66	0.17
22.00	2.20	0.64	0.17
22.50	2.18	0.63	0.16
23.00	2.16	0.61	0.15
23.50	2.15	0.60	0.15
24.00	2.13	0.59	0.14
24.50	2.12	0.57	0.13
25.00	2.11	0.56	0.13
25.50	2.09	0.55	0.12
26.00	2.08	0.54	0.12
26.50	2.07	0.53	0.11
27.00	2.05	0.52	0.11
27.50	2.04	0.51	0.11
28.00	2.03	0.50	0.10
28.50	2.02	0.49	0.10
29.00	2.01	0.48	0.10
29.50	2.00	0.47	0.09
30.00	1.99	0.47	0.09

IEC255 Inverse Time Protection table

Appendix B IEEE Inverse Time Protection Tables

The Inverse time protection curves in this appendices are as defined by IEEE Std C37.112-1996 standard where “I” is the actual current expressed as a multiple of the trip current set by the user:

■ Std Moderately inverse, for which equation is:

Time to Trip = $(0.0515 / (I^{0.02} - 1)) + 0.114$

■ Std Very inverse, for which equation is:

Time to Trip = $(19.61 / (I^2 - 1)) + 0.491$

■ Std Extremely Inverse, for which equation is:

Time to Trip = $(28.2 / (I^2 - 1)) + 0.1217$

Tables for the times to trip for each of these curves are given below.

Setting Current Multiple	Std Moderately Inverse Time (secs)	Std Very Inverse Time (secs)	Std Extremely Inverse Time (secs)
1.10	27.11	93.87	134.41
1.50	6.44	16.18	22.68
2.00	3.80	7.03	9.52
2.50	2.90	4.23	5.49
3.00	2.43	2.94	3.65
3.50	2.14	2.23	2.63
4.00	1.95	1.80	2.00
4.50	1.80	1.51	1.59
5.00	1.69	1.31	1.30
5.50	1.60	1.16	1.09
6.00	1.53	1.05	0.93
6.50	1.46	0.97	0.81
7.00	1.41	0.90	0.71
7.50	1.37	0.85	0.63
8.00	1.33	0.80	0.57
8.50	1.29	0.77	0.52
9.00	1.26	0.74	0.47
9.50	1.23	0.71	0.44
10.00	1.21	0.69	0.41
10.50	1.18	0.67	0.38
11.00	1.16	0.65	0.36
11.50	1.14	0.64	0.34
12.00	1.12	0.63	0.32
12.50	1.11	0.62	0.30
13.00	1.09	0.61	0.29
13.50	1.08	0.60	0.28
14.00	1.06	0.59	0.27
14.50	1.05	0.58	0.26
15.00	1.04	0.58	0.25
15.50	1.03	0.57	0.24
16.00	1.02	0.57	0.23
16.50	1.01	0.56	0.23
17.00	1.00	0.56	0.22
17.50	0.99	0.56	0.21
18.00	0.98	0.55	0.21
18.50	0.97	0.55	0.20
19.00	0.96	0.55	0.20
19.50	0.96	0.54	0.20

IEEE Inverse Time Protection table

Setting Current Multiple	Std Moderately Inverse Time (secs)	Std Very Inverse Time (secs)	Std Extremely Inverse Time (secs)
20.00	0.95	0.54	0.19
20.50	0.94	0.54	0.19
21.00	0.93	0.54	0.19
21.50	0.93	0.53	0.18
22.00	0.92	0.53	0.18
22.50	0.92	0.53	0.18
23.00	0.91	0.53	0.18
23.50	0.90	0.53	0.17
24.00	0.90	0.53	0.17
24.50	0.89	0.52	0.17
25.00	0.89	0.52	0.17
25.50	0.88	0.52	0.17
26.00	0.88	0.52	0.16
26.50	0.87	0.52	0.16
27.00	0.87	0.52	0.16
27.50	0.87	0.52	0.16
28.00	0.86	0.52	0.16
28.50	0.86	0.52	0.16
29.00	0.85	0.51	0.16
29.50	0.85	0.51	0.15
30.00	0.85	0.51	0.15

IEEE Inverse Time Protection table

Appendix C Non-Standard Inverse Time Protection Curves

The 42 Inverse time protection curves in this appendix are non-standard inverse curves.

Tables for the times to trip for each of these curves are given below.

Setting Multiple Current	TCC 010	TCC 101	TCC 102	TCC 103	TCC 104	TCC 105	TCC 106	TCC 107	TCC 111
1.10	0.145	0.100	0.214	0.301	0.445	0.705	1.015	1.218	2.589
1.50	0.100	0.036	0.065	0.128	0.252	0.351	0.396	0.597	1.121
2.00	0.080	0.022	0.028	0.075	0.155	0.232	0.203	0.291	0.651
2.50	0.069	0.019	0.022	0.052	0.107	0.171	0.117	0.159	0.443
3.00	0.060	0.017	0.019	0.040	0.067	0.137	0.073	0.095	0.325
3.50	0.056	0.016	0.017	0.033	0.040	0.113	0.046	0.055	0.250
4.00	0.053	0.016	0.016	0.029	0.028	0.097	0.030	0.034	0.201
4.50	0.050	0.015	0.016	0.025	0.022	0.085	0.022	0.024	0.169
5.00	0.048	0.015	0.016	0.022	0.019	0.076	0.019	0.020	0.146
5.50	0.046	0.015	0.016	0.020	0.017	0.068	0.016	0.017	0.127
6.00	0.045	0.015	0.016	0.019	0.016	0.059	0.015	0.016	0.113
6.50	0.044	0.015	0.016	0.018	0.015	0.053	0.013	0.015	0.101
7.00	0.043	0.015	0.016	0.017	0.014	0.048	0.013	0.014	0.091
7.50	0.042	0.015	0.016	0.016	0.013	0.043	0.012	0.013	0.083
8.00	0.041	0.015	0.016	0.016	0.012	0.038	0.011	0.013	0.076
8.50	0.041	0.015	0.016	0.015	0.012	0.033	0.011	0.013	0.069
9.00	0.040	0.015	0.016	0.015	0.011	0.030	0.011	0.012	0.063
9.50	0.040	0.015	0.016	0.015	0.011	0.027	0.011	0.012	0.057
10.00	0.039	0.015	0.016	0.015	0.011	0.025	0.011	0.012	0.053
10.50	0.039	0.015	0.016	0.014	0.011	0.024	0.011	0.012	0.049
11.00	0.039	0.015	0.016	0.014	0.011	0.022	0.011	0.011	0.045
11.50	0.039	0.015	0.016	0.014	0.011	0.021	0.011	0.011	0.041
12.00	0.038	0.015	0.016	0.014	0.011	0.020	0.011	0.011	0.038
12.50	0.038	0.015	0.016	0.014	0.011	0.019	0.011	0.011	0.036
13.00	0.038	0.015	0.016	0.014	0.011	0.018	0.011	0.011	0.033
13.50	0.037	0.015	0.016	0.014	0.011	0.017	0.011	0.011	0.031
14.00	0.037	0.015	0.016	0.014	0.011	0.016	0.011	0.011	0.030
14.50	0.037	0.015	0.016	0.014	0.011	0.016	0.011	0.011	0.029
15.00	0.037	0.015	0.016	0.014	0.011	0.015	0.011	0.011	0.027
15.50	0.037	0.015	0.016	0.014	0.011	0.015	0.011	0.011	0.026
16.00	0.036	0.015	0.016	0.014	0.011	0.014	0.011	0.011	0.025
16.50	0.036	0.015	0.016	0.014	0.011	0.014	0.011	0.011	0.024
17.00	0.036	0.015	0.016	0.014	0.011	0.014	0.011	0.011	0.023
17.50	0.036	0.015	0.016	0.014	0.011	0.014	0.011	0.011	0.023
18.00	0.035	0.015	0.016	0.014	0.011	0.013	0.011	0.011	0.022
18.50	0.035	0.015	0.016	0.014	0.011	0.013	0.011	0.011	0.022
19.00	0.035	0.015	0.016	0.014	0.011	0.013	0.011	0.011	0.021
19.50	0.035	0.015	0.016	0.014	0.011	0.013	0.011	0.011	0.021
20.00	0.035	0.015	0.016	0.014	0.011	0.012	0.011	0.011	0.020
20.50	0.035	0.015	0.016	0.014	0.011	0.012	0.011	0.011	0.020

Non-standard Inverse Time Protection table, TCC 010-111

Setting Multiple Current	TCC 010	TCC 101	TCC 102	TCC 103	TCC 104	TCC 105	TCC 106	TCC 107	TCC 111
21.00	0.035	0.015	0.016	0.014	0.011	0.012	0.011	0.011	0.019
21.50	0.035	0.015	0.016	0.014	0.011	0.012	0.011	0.011	0.019
22.00	0.035	0.015	0.016	0.014	0.011	0.012	0.011	0.011	0.019
22.50	0.035	0.015	0.016	0.014	0.011	0.012	0.011	0.011	0.018
23.00	0.035	0.015	0.016	0.014	0.011	0.012	0.011	0.011	0.018
23.50	0.035	0.015	0.016	0.014	0.011	0.012	0.011	0.011	0.018
24.00	0.035	0.015	0.016	0.014	0.011	0.012	0.011	0.011	0.017
24.50	0.035	0.015	0.016	0.014	0.011	0.012	0.011	0.011	0.017
25.00	0.035	0.015	0.016	0.014	0.011	0.012	0.011	0.011	0.017
25.50	0.035	0.015	0.016	0.014	0.011	0.011	0.011	0.011	0.017
26.00	0.035	0.015	0.016	0.014	0.011	0.011	0.011	0.011	0.016
26.50	0.035	0.015	0.016	0.014	0.011	0.011	0.011	0.011	0.016
27.00	0.035	0.015	0.016	0.014	0.011	0.011	0.011	0.011	0.016
27.50	0.035	0.015	0.016	0.014	0.011	0.011	0.011	0.011	0.016
28.00	0.035	0.015	0.016	0.014	0.011	0.011	0.011	0.011	0.016
28.50	0.035	0.015	0.016	0.014	0.011	0.011	0.011	0.011	0.016
29.00	0.035	0.015	0.016	0.014	0.011	0.011	0.011	0.011	0.016
29.50	0.035	0.015	0.016	0.014	0.011	0.011	0.011	0.011	0.016
30.00	0.035	0.015	0.016	0.014	0.011	0.011	0.011	0.011	0.016

Non-standard Inverse Time Protection table, TCC 010-111

Setting Multiple Current	TCC 112	TCC 113	TCC 114	TCC 115	TCC 116	TCC 117	TCC 118	TCC 119	TCC 120
1.10	2.415	2.954	6.054	4.692	5.752	5.396	6.949	6.401	9.354
1.50	1.024	1.264	2.376	1.792	2.301	2.291	2.511	2.505	3.755
2.00	0.563	0.704	1.398	0.726	1.216	1.396	1.248	1.518	2.013
2.50	0.356	0.467	0.952	0.374	0.748	0.920	0.754	1.145	1.302
3.00	0.257	0.358	0.699	0.219	0.499	0.649	0.523	0.940	0.925
3.50	0.198	0.293	0.532	0.141	0.351	0.489	0.384	0.809	0.696
4.00	0.158	0.259	0.420	0.096	0.259	0.391	0.295	0.716	0.549
4.50	0.132	0.233	0.334	0.067	0.200	0.321	0.234	0.652	0.462
5.00	0.113	0.215	0.261	0.049	0.159	0.270	0.193	0.602	0.398
5.50	0.099	0.203	0.206	0.038	0.129	0.231	0.162	0.572	0.348
6.00	0.088	0.196	0.164	0.030	0.107	0.200	0.139	0.549	0.311
6.50	0.079	0.189	0.127	0.025	0.090	0.176	0.121	0.529	0.281
7.00	0.073	0.185	0.098	0.021	0.078	0.156	0.107	0.512	0.257
7.50	0.068	0.182	0.076	0.019	0.068	0.140	0.096	0.499	0.236
8.00	0.063	0.180	0.053	0.018	0.060	0.126	0.087	0.487	0.220
8.50	0.059	0.179	0.038	0.017	0.053	0.115	0.078	0.477	0.207
9.00	0.056	0.177	0.032	0.016	0.048	0.105	0.071	0.468	0.195
9.50	0.053	0.176	0.028	0.015	0.043	0.097	0.066	0.461	0.185
10.00	0.050	0.175	0.025	0.014	0.039	0.089	0.060	0.455	0.175
10.50	0.048	0.174	0.024	0.014	0.036	0.083	0.056	0.452	0.167
11.00	0.046	0.174	0.022	0.014	0.034	0.078	0.051	0.448	0.161
11.50	0.044	0.173	0.021	0.014	0.031	0.073	0.048	0.445	0.155
12.00	0.043	0.172	0.020	0.014	0.029	0.068	0.045	0.441	0.150
12.50	0.041	0.172	0.019	0.014	0.027	0.064	0.042	0.439	0.145
13.00	0.040	0.172	0.018	0.014	0.026	0.059	0.040	0.436	0.141
13.50	0.039	0.171	0.018	0.014	0.024	0.055	0.037	0.434	0.137
14.00	0.038	0.171	0.017	0.014	0.023	0.052	0.035	0.432	0.134
14.50	0.037	0.171	0.017	0.014	0.022	0.048	0.034	0.431	0.130
15.00	0.036	0.170	0.016	0.014	0.020	0.044	0.032	0.429	0.128
15.50	0.035	0.170	0.016	0.014	0.019	0.041	0.031	0.429	0.126
16.00	0.034	0.170	0.016	0.014	0.019	0.039	0.030	0.428	0.124
16.50	0.033	0.170	0.015	0.014	0.018	0.037	0.029	0.427	0.122
17.00	0.032	0.169	0.015	0.014	0.017	0.035	0.028	0.427	0.121
17.50	0.032	0.169	0.015	0.014	0.016	0.033	0.026	0.426	0.119
18.00	0.031	0.169	0.014	0.014	0.016	0.031	0.025	0.426	0.117
18.50	0.031	0.169	0.014	0.014	0.015	0.030	0.025	0.425	0.115
19.00	0.030	0.168	0.014	0.014	0.015	0.029	0.024	0.425	0.114
19.50	0.030	0.168	0.014	0.014	0.014	0.028	0.023	0.424	0.113
20.00	0.029	0.168	0.014	0.014	0.014	0.027	0.022	0.424	0.111
20.50	0.029	0.168	0.014	0.014	0.014	0.026	0.022	0.423	0.110
21.00	0.028	0.167	0.013	0.014	0.013	0.026	0.021	0.423	0.109
21.50	0.028	0.167	0.013	0.014	0.013	0.025	0.020	0.422	0.108
22.00	0.028	0.167	0.013	0.014	0.013	0.025	0.020	0.422	0.106
22.50	0.027	0.167	0.013	0.014	0.013	0.024	0.019	0.422	0.105
23.00	0.027	0.167	0.013	0.014	0.012	0.024	0.019	0.421	0.104
23.50	0.027	0.166	0.013	0.014	0.012	0.023	0.019	0.421	0.103

Non-standard Inverse Time Protection table, TCC 112-120

Setting Multiple Current	TCC 112	TCC 113	TCC 114	TCC 115	TCC 116	TCC 117	TCC 118	TCC 119	TCC 120
24.00	0.026	0.166	0.013	0.014	0.012	0.023	0.018	0.421	0.102
24.50	0.026	0.166	0.013	0.014	0.012	0.023	0.018	0.421	0.102
25.00	0.026	0.166	0.012	0.014	0.012	0.022	0.018	0.421	0.101
25.50	0.026	0.166	0.012	0.014	0.012	0.022	0.017	0.421	0.100
26.00	0.026	0.166	0.012	0.014	0.012	0.021	0.017	0.421	0.099
26.50	0.025	0.166	0.012	0.014	0.011	0.021	0.017	0.421	0.098
27.00	0.025	0.166	0.012	0.014	0.011	0.021	0.017	0.421	0.098
27.50	0.025	0.166	0.012	0.014	0.011	0.020	0.016	0.421	0.097
28.00	0.025	0.166	0.012	0.014	0.011	0.020	0.016	0.421	0.096
28.50	0.025	0.166	0.012	0.014	0.011	0.020	0.016	0.421	0.096
29.00	0.025	0.166	0.012	0.014	0.011	0.020	0.016	0.421	0.095
29.50	0.025	0.166	0.012	0.014	0.011	0.020	0.016	0.421	0.095
30.00	0.025	0.166	0.012	0.014	0.011	0.020	0.016	0.421	0.095

Non-standard Inverse Time Protection table, TCC 112-120

Setting Multiple Current	TCC 121	TCC 122	TCC 131	TCC 132	TCC 133	TCC 134	TCC 135	TCC 136	TCC 137
1.10	8.877	8.219	10.610	13.732	13.716	11.367	13.660	15.655	19.198
1.50	1.145	4.430	8.306	4.460	5.602	4.790	6.369	4.658	10.162
2.00	0.019	2.616	7.106	2.586	3.020	2.387	3.677	2.781	6.495
2.50	0.014	1.689	6.425	1.571	1.920	1.507	2.566	1.884	4.756
3.00	0.012	1.102	6.101	1.002	1.329	1.079	1.969	1.339	3.667
3.50	0.011	0.653	5.901	0.722	0.973	0.847	1.616	1.024	2.933
4.00	0.011	0.347	5.730	0.552	0.754	0.698	1.367	0.833	2.416
4.50	0.011	0.114	5.624	0.438	0.613	0.617	1.197	0.686	2.006
5.00	0.011	0.037	5.537	0.353	0.511	0.553	1.072	0.550	1.694
5.50	0.011	0.022	5.460	0.287	0.432	0.508	0.974	0.448	1.464
6.00	0.011	0.019	5.398	0.236	0.371	0.484	0.900	0.367	1.287
6.50	0.011	0.017	5.359	0.198	0.323	0.463	0.849	0.304	1.155
7.00	0.011	0.016	5.334	0.169	0.284	0.446	0.805	0.252	1.062
7.50	0.011	0.015	5.312	0.146	0.253	0.436	0.767	0.210	0.990
8.00	0.011	0.014	5.290	0.127	0.227	0.432	0.735	0.172	0.928
8.50	0.011	0.013	5.269	0.110	0.205	0.427	0.711	0.142	0.873
9.00	0.011	0.013	5.251	0.097	0.186	0.423	0.689	0.116	0.824
9.50	0.011	0.012	5.233	0.086	0.170	0.419	0.670	0.087	0.786
10.00	0.011	0.012	5.216	0.077	0.157	0.416	0.651	0.064	0.753
10.50	0.011	0.012	5.210	0.070	0.146	0.415	0.635	0.049	0.730
11.00	0.011	0.011	5.208	0.064	0.137	0.415	0.619	0.038	0.714
11.50	0.011	0.011	5.208	0.058	0.128	0.415	0.607	0.032	0.699
12.00	0.011	0.011	5.208	0.053	0.121	0.415	0.599	0.029	0.685
12.50	0.011	0.011	5.208	0.049	0.115	0.415	0.591	0.026	0.671
13.00	0.011	0.011	5.208	0.046	0.109	0.415	0.584	0.024	0.662
13.50	0.011	0.011	5.208	0.043	0.103	0.415	0.577	0.022	0.653
14.00	0.011	0.011	5.208	0.040	0.098	0.415	0.571	0.021	0.645
14.50	0.011	0.011	5.207	0.037	0.093	0.415	0.566	0.020	0.640
15.00	0.011	0.011	5.207	0.035	0.089	0.415	0.561	0.019	0.635
15.50	0.011	0.011	5.207	0.033	0.085	0.415	0.556	0.018	0.629
16.00	0.011	0.011	5.207	0.032	0.082	0.415	0.553	0.017	0.626
16.50	0.011	0.011	5.207	0.030	0.078	0.415	0.551	0.017	0.622
17.00	0.011	0.011	5.207	0.029	0.076	0.415	0.549	0.017	0.619
17.50	0.011	0.011	5.207	0.027	0.074	0.415	0.548	0.016	0.616
18.00	0.011	0.011	5.207	0.026	0.072	0.415	0.546	0.016	0.614
18.50	0.011	0.011	5.207	0.025	0.070	0.415	0.544	0.015	0.612
19.00	0.011	0.011	5.207	0.023	0.068	0.415	0.543	0.015	0.610
19.50	0.011	0.011	5.207	0.023	0.066	0.415	0.541	0.015	0.608
20.00	0.011	0.011	5.207	0.022	0.065	0.415	0.539	0.015	0.606
20.50	0.011	0.011	5.207	0.022	0.063	0.415	0.538	0.015	0.605
21.00	0.011	0.011	5.207	0.021	0.061	0.415	0.537	0.015	0.603
21.50	0.011	0.011	5.207	0.021	0.060	0.415	0.535	0.015	0.602
22.00	0.011	0.011	5.207	0.020	0.058	0.415	0.534	0.015	0.602
22.50	0.011	0.011	5.207	0.020	0.057	0.415	0.533	0.015	0.602
23.00	0.011	0.011	5.207	0.019	0.056	0.415	0.531	0.015	0.602
23.50	0.011	0.011	5.207	0.019	0.054	0.415	0.530	0.015	0.602

Non-standard Inverse Time Protection table, TCC 121-137

Setting Multiple Current	TCC 121	TCC 122	TCC 131	TCC 132	TCC 133	TCC 134	TCC 135	TCC 136	TCC 137
24.00	0.011	0.011	5.207	0.018	0.054	0.415	0.529	0.015	0.602
24.50	0.011	0.011	5.207	0.018	0.053	0.415	0.528	0.015	0.602
25.00	0.011	0.011	5.207	0.018	0.052	0.415	0.528	0.015	0.602
25.50	0.011	0.011	5.207	0.018	0.051	0.415	0.528	0.015	0.602
26.00	0.011	0.011	5.207	0.017	0.051	0.415	0.528	0.015	0.602
26.50	0.011	0.011	5.207	0.017	0.050	0.415	0.528	0.015	0.602
27.00	0.011	0.011	5.207	0.017	0.049	0.415	0.528	0.015	0.602
27.50	0.011	0.011	5.207	0.017	0.049	0.415	0.528	0.015	0.602
28.00	0.011	0.011	5.207	0.017	0.048	0.415	0.528	0.015	0.602
28.50	0.011	0.011	5.207	0.017	0.047	0.415	0.528	0.015	0.602
29.00	0.011	0.011	5.207	0.017	0.047	0.415	0.528	0.015	0.602
29.50	0.011	0.011	5.207	0.017	0.046	0.415	0.528	0.015	0.602
30.00	0.011	0.011	5.207	0.017	0.046	0.415	0.528	0.015	0.602

Non-standard Inverse Time Protection table, TCC 121-137

Setting Multiple Current	TCC 138	TCC 139	TCC 140	TCC 141	TCC 142	TCC 151	TCC 152	TCC 161	TCC 162
1.10	20.647	15.250	25.082	19.763	36.299	38.923	72.701	19.879	27.549
1.50	9.741	5.097	10.141	15.227	16.543	11.551	45.263	3.860	8.109
2.00	5.905	2.889	5.802	13.159	9.181	5.848	39.251	1.688	3.793
2.50	4.115	1.943	4.122	12.159	5.868	3.688	36.458	1.002	2.331
3.00	3.117	1.446	3.254	11.511	3.711	2.545	35.035	0.686	1.570
3.50	2.493	1.139	2.708	11.095	2.372	1.888	33.905	0.494	1.117
4.00	1.949	0.929	2.323	10.860	1.507	1.489	32.987	0.371	0.819
4.50	1.583	0.776	2.057	10.655	1.101	1.244	32.235	0.299	0.615
5.00	1.299	0.661	1.857	10.486	0.849	1.068	31.587	0.248	0.486
5.50	1.085	0.564	1.695	10.419	0.701	0.973	31.014	0.209	0.394
6.00	0.925	0.486	1.590	10.383	0.595	0.894	30.568	0.180	0.325
6.50	0.802	0.423	1.506	10.351	0.511	0.828	30.234	0.158	0.274
7.00	0.703	0.373	1.434	10.321	0.445	0.773	29.955	0.140	0.235
7.50	0.625	0.332	1.372	10.293	0.391	0.728	29.690	0.126	0.206
8.00	0.561	0.297	1.315	10.267	0.346	0.687	29.441	0.114	0.182
8.50	0.508	0.268	1.268	10.243	0.310	0.652	29.226	0.105	0.162
9.00	0.462	0.242	1.226	10.220	0.279	0.622	29.021	0.097	0.145
9.50	0.422	0.221	1.197	10.199	0.253	0.600	28.880	0.091	0.130
10.00	0.388	0.202	1.168	10.180	0.231	0.579	28.768	0.085	0.117
10.50	0.360	0.185	1.144	10.175	0.211	0.565	28.661	0.079	0.106
11.00	0.337	0.171	1.119	10.175	0.194	0.551	28.564	0.075	0.097
11.50	0.315	0.158	1.098	10.175	0.179	0.539	28.463	0.071	0.089
12.00	0.297	0.146	1.079	10.175	0.166	0.529	28.376	0.067	0.082
12.50	0.280	0.135	1.060	10.175	0.154	0.518	28.290	0.064	0.076
13.00	0.265	0.126	1.053	10.175	0.144	0.514	28.201	0.061	0.071
13.50	0.253	0.117	1.046	10.175	0.132	0.509	28.135	0.059	0.067
14.00	0.242	0.110	1.038	10.175	0.121	0.504	28.068	0.057	0.063
14.50	0.232	0.103	1.032	10.175	0.112	0.499	27.998	0.054	0.060
15.00	0.224	0.096	1.026	10.175	0.103	0.495	27.971	0.052	0.056
15.50	0.216	0.090	1.020	10.175	0.095	0.491	27.955	0.051	0.053
16.00	0.208	0.085	1.014	10.175	0.088	0.487	27.939	0.049	0.050
16.50	0.201	0.080	1.009	10.175	0.081	0.485	27.924	0.047	0.048
17.00	0.195	0.074	1.003	10.175	0.076	0.482	27.910	0.046	0.045
17.50	0.190	0.070	0.998	10.175	0.070	0.479	27.897	0.045	0.042
18.00	0.184	0.065	0.996	10.175	0.066	0.477	27.883	0.043	0.040
18.50	0.197	0.062	0.995	10.175	0.062	0.475	27.869	0.043	0.038
19.00	0.175	0.058	0.994	10.175	0.059	0.472	27.857	0.042	0.036
19.50	0.171	0.055	0.993	10.175	0.056	0.470	27.845	0.041	0.034
20.00	0.168	0.051	0.992	10.175	0.053	0.469	27.833	0.040	0.033
20.50	0.154	0.049	0.991	10.175	0.050	0.468	27.821	0.040	0.031
21.00	0.161	0.046	0.990	10.175	0.048	0.468	27.809	0.039	0.030
21.50	0.158	0.043	0.990	10.175	0.046	0.468	27.799	0.038	0.029
22.00	0.155	0.041	0.989	10.175	0.045	0.467	27.788	0.038	0.028
22.50	0.152	0.039	0.988	10.175	0.043	0.467	27.777	0.037	0.027
23.00	0.149	0.037	0.988	10.175	0.042	0.467	27.766	0.036	0.026
23.50	0.146	0.035	0.987	10.175	0.040	0.467	27.757	0.036	0.026

Non-standard Inverse Time Protection table, TCC 138-162

Setting Multiple Current	TCC 138	TCC 139	TCC 140	TCC 141	TCC 142	TCC 151	TCC 152	TCC 161	TCC 162
24.00	0.144	0.033	0.986	10.175	0.039	0.466	27.751	0.035	0.025
24.50	0.142	0.031	0.986	10.175	0.038	0.466	27.746	0.035	0.024
25.00	0.140	0.030	0.985	10.175	0.037	0.466	27.740	0.034	0.024
25.50	0.137	0.028	0.985	10.175	0.037	0.466	27.735	0.033	0.023
26.00	0.135	0.027	0.985	10.175	0.036	0.465	27.729	0.033	0.023
26.50	0.134	0.026	0.985	10.175	0.035	0.465	27.725	0.033	0.022
27.00	0.133	0.025	0.984	10.175	0.034	0.465	27.722	0.032	0.022
27.50	0.132	0.024	0.984	10.175	0.034	0.464	27.720	0.032	0.021
28.00	0.131	0.023	0.984	10.175	0.033	0.464	27.717	0.031	0.021
28.50	0.131	0.022	0.984	10.175	0.033	0.464	27.714	0.031	0.020
29.00	0.130	0.022	0.984	10.175	0.032	0.464	27.711	0.031	0.020
29.50	0.129	0.021	0.984	10.175	0.032	0.464	27.709	0.031	0.020
30.00	0.129	0.021	0.984	10.175	0.032	0.464	27.709	0.031	0.020

Non-standard Inverse Time Protection table, TCC 138-162

Setting Multiple Current	TCC 163	TCC 164	TCC 165	TCC 200	TCC 201	TCC 202
1.10	33.228	53.091	84.512	74.687	122.30	125.06
1.50	3.747	18.503	31.451	17.354	27.161	64.047
2.00	1.356	7.916	12.916	10.039	13.506	26.654
2.50	0.720	4.318	5.994	7.583	9.012	15.234
3.00	0.482	2.596	3.199	6.323	6.770	10.004
3.50	0.356	1.715	2.051	5.530	5.410	7.109
4.00	0.276	1.162	1.463	4.985	4.505	5.335
4.50	0.222	0.787	1.102	4.588	3.860	4.154
5.00	0.187	0.556	0.866	4.286	3.380	3.333
5.50	0.161	0.420	0.714	4.044	3.006	2.735
6.00	0.140	0.333	0.602	3.844	2.705	2.286
6.50	0.123	0.272	0.515	3.671	2.456	1.940
7.00	0.109	0.228	0.450	3.533	2.254	1.667
7.50	0.097	0.197	0.397	3.409	2.081	1.448
8.00	0.087	0.174	0.352	3.300	1.931	1.270
8.50	0.078	0.155	0.317	3.206	1.804	1.123
9.00	0.070	0.140	0.287	3.119	1.690	1.000
9.50	0.064	0.127	0.262	3.044	1.591	0.897
10.00	0.058	0.116	0.240	2.974	1.502	0.808
10.50	0.054	0.106	0.221	2.910	1.422	0.732
11.00	0.049	0.098	0.205	2.854	1.353	0.667
11.50	0.046	0.090	0.190	2.797	1.286	0.610
12.00	0.042	0.085	0.178	2.751	1.229	0.560
12.50	0.040	0.080	0.166	2.705	1.176	0.516
13.00	0.037	0.075	0.156	2.660	1.125	0.476
13.50	0.035	0.071	0.145	2.623	1.082	0.441
14.00	0.033	0.068	0.135	2.586	1.040	0.410
14.50	0.031	0.065	0.126	2.549	1.001	0.382

Non-standard Inverse Time Protection table, TCC 163-202

Setting Multiple Current	TCC 163	TCC 164	TCC 165	TCC 200	TCC 201	TCC 202
15.00	0.030	0.062	0.117	2.518	0.966	0.357
15.50	0.028	0.059	0.110	2.488	0.933	0.335
16.00	0.027	0.057	0.103	2.458	0.901	0.314
16.50	0.026	0.055	0.096	2.429	0.871	0.295
17.00	0.025	0.053	0.091	2.404	0.845	0.278
17.50	0.023	0.051	0.086	2.380	0.820	0.262
18.00	0.022	0.049	0.081	2.355	0.795	0.248
18.50	0.022	0.048	0.077	2.330	0.772	0.234
19.00	0.021	0.047	0.072	2.310	0.751	0.222
19.50	0.020	0.045	0.069	2.290	0.731	0.211
20.00	0.019	0.044	0.065	2.270	0.712	0.200
20.50	0.019	0.043	0.062	2.249	0.693	0.191
21.00	0.018	0.042	0.059	2.231	0.676	0.182
21.50	0.018	0.040	0.057	2.214	0.660	0.173
22.00	0.018	0.039	0.055	2.198	0.644	0.166
22.50	0.017	0.038	0.053	2.181	0.629	0.159
23.00	0.017	0.037	0.051	2.164	0.614	0.152
23.50	0.017	0.036	0.049	2.149	0.601	0.145
24.00	0.017	0.036	0.047	2.135	0.588	0.139
24.50	0.016	0.035	0.046	2.122	0.576	0.134
25.00	0.016	0.034	0.044	2.108	0.564	0.129
25.50	0.016	0.033	0.043	2.094	0.552	0.124
26.00	0.016	0.033	0.042	2.080	0.541	0.119
26.50	0.015	0.032	0.041	2.068	0.530	0.114
27.00	0.015	0.031	0.040	2.056	0.520	0.110
27.50	0.015	0.031	0.040	2.045	0.510	0.106
28.00	0.014	0.030	0.039	2.034	0.501	0.103
28.50	0.014	0.030	0.039	2.022	0.492	0.099
29.00	0.014	0.029	0.038	2.011	0.482	0.096
29.50	0.014	0.029	0.038	2.001	0.475	0.093
30.00	0.014	0.029	0.038	2.001	0.475	0.093

Non-standard Inverse Time Protection table, TCC 163-202

Appendix D System Status Pages

This appendix shows all the System Status group of pages on the Operator Control Panel display.

- See Section 6 (page 25) to Section 9 (page 39) for more information on the data.

The top line of the display is the page title. To the right of the title is a letter, these have significance as follows:

S	System Status Display Group
P	Protection Display Group
M	Measurement Display Group

The next three lines are the data on display. Most displays have six data fields. These lines are shown in the following tables.

Typical or default values are shown in the tables. For example **Reclose Time 0.5 sec** is shown for the reclose time setting. When the user views display it would show the actual setting, e.g. **Reclose Time 3.0 sec**.[1]

Where the display field can have alternative text (e.g. SEF Protection ON or SEF Protection OFF) all the possible text displays are shown, one below the other. For example, in the table overleaf for the page:

SYSTEM STATUS - OPERATOR SETTINGS

the first data field can be either:

- LOCAL CONTROL ON, or
- Remote Control ON

The letters in the small columns to the right of each display text column indicate the type of data displayed. These have significance as follows[2]

O	Operator Controlled
D	Display Only (i.e. cannot be changed)
P	Password Protected (i.e. can only be changed if the password is known)
R	Operator Controlled Reset (i.e. resets a field or group of fields)

Fault Flags

Trip Flags

--------------------------------------- TRIP FLAGS ---------------------------------- S												
O/C	□■	00-99	ABC	I	LOP	□■	00-99	ABC		Ext	□■	00-99
E/F	□■	00-99		I	FRQ	□■	00-99[a]					
SEF	□■	00-99			NPS	□■	00-99		I	OPS		0001

a. This is a CAPM 5 feature only.

Pickup Flags

--------------------------------------- PICKUP FLAGS ---------------------------------- S												
O/C	□■	00-99	ABC	I	LOP	□■	00-99	ABC				
E/F	□■	00-99		I	FRQ	□■	00-99[a]					
SEF	□■	00-99			NPS	□■	00-99		I	OPS		0001

a. This is a CAPM 5 feature only.

1. Different default values from those shown may be factory loaded.
2. These letters do not appear on the actual display

Operator Settings 1

OPERATOR SETTINGS 1			S
LOCAL CONTROL ON Remote Control On Hit and Run	O	E/F OFF, SEF OFF E/F ON, SEF OFF E/F ON, SEF ON E/F ON E/F OFF The options appearing in this field are dependent on the SEF and E/F Control settings. See Section 9 (page 39)	O
Auto Reclose OFF Auto Reclose ON Protection OFF[a]	O	NPS OFF NPS ON NPS Prot Alarm	O
Lockout Single Shot Active (blank in normal operation) Reclose 1 Reclose 2 Reclose 3	D	Protection Auto[b c] Prot ‘A’, ‘B’, **…** , ‘J’ Active[d] Auto ‘A’ Active[2] Auto ‘B’ Active[2] .	O O D D

a. If {SYSTEM STATUS-OPTIONS 1:Prot OFF Not Allowed} is configured then this option is not shown.
b. Navigation of this field starts with “Protection Auto” (when configured) to minimise key presses.
c. If {SYSTEN STATUS-OPTIONS 1:APGS Not Allowed} is configured then this option is not shown.
d. One of ten different Protection Groups (A-J) can be active. Foe example, if Protection Group D is active the display will read {Prot ‘D’ Active}.

Operator settings 2

OPERATOR SETTINGS 2			S
Cold Load OFF Cold Load IDLE Cold Load NO CHANGE Cold Load MAX CLP120min x 2.3 mult[a]	O		

a. This field is “display only” when configured as Cold Load OFF.

Switchgear Status

SWITCHGEAR STATUS			S
Work Tag OFF Work Tag Applied	P	SF6 Normal 35kPag SF6 Low 5kPag SF6 Pressure Invalid	D
Aux Supply Normal Aux Supply Fail	D	BtyNormal X.XV Bty Off X.XV Bty Low Volts X.XV Bty Overvolt X.XV	D
ACR Connected ACR Unplugged	D	ACR Data Valid ACR Data Invalid	D

Live/Dead Indication

LIVE/DEAD INDICATION			S
A1 Live A1 Dead	D	A2 Live A2 Dead	
B1 Live B1 Dead	D	B2 Live B2 Dead	
C1 Live C1 Dead	D	C2 Live C2 Dead	

Phase Voltage and Power Flow

PHASE VOLTAGE and POWER FLOW			S
“LIVE” if > 2000V	P	Supply Timeout 4.0s	P
Power Flow Signed Power Flow Unsigned	P	Source 1, Load 2 Source 2, Load 1	P
Display Ph/Ph Volt Display Ph/Earth Volt	P	System Freq 50Hz System Freq 60Hz	P

Switchgear Terminal Designation

SWITCHGEAR TERMINAL DESIGNATION			S
U1 / U2 Bushings		A Phase[a].	P
V1 / V2 Bushings		B Phase	
W1 / W2 Bushings		C Phase	

a. The phase designations can be rotated from this field by pressing the arrow key (ABC, ACB, BAC, BCA, CAB, CBA)

Radio and Time Set

RADIO and TIME SET			S
Radio Supply OFF Radio Supply ON Radio ShutDown See Radio/Modem Power - page 83 for further details.	O	Radio Supply 12V	P
Radio Hold 60 min	P		
Date/Time	O	10/01/2001 10:55:12	D

Switchgear Type and Ratings

SWITCHGEAR TYPE and RATINGS			S
Recloser	D	S/N NP-101005	D
12500A Interruption	D	Rated 12000 Volts	D
630A Continuous	D	1292 Operations	D

Switchgear Wear/General Details

SWITCHGEAR WEAR/GENERAL DETAILS			S
U Contact 75.6%	D	CAPM S/N NP-101234	D
V Contact 75.6%	D	Software 028-01.00	D
W Contact 74.5%	D	Configuration 10087	D

Capability

CAPABILITY[a]		S
N Recloser (Inter')	Manual NSR01-10**[b]	D
WSOS P9 Local	Manual N00-218	D
WSOS P8 Remote [c]	Manual N00-402 R00+	D

a. Additional lines can be viewed by pressing the SELECT key.
b. Refer to back cover of this publication.
c. Some software configurations will support another protocol on Port P8 as an alternative to WSOS.

Options 1

OPTIONS 1			S
SEF Available SEF Not Available	P	Prot OFF Allowed Prot OFF Not Allowed	P
Gas Low Lockout OFF Gas Low Lockout ON	P	E/F OFF Allowed E/F OFF Not Allowed	P
		NPS OFF Allowed NPS OFF Not Allowed	P

Options 2

OPTIONS 2			S
DIRB Not Available DIRB Available	P	Loop Auto Not Avail Loop Auto Available	P
LOP/Loop Auto Unlinked[a] LOP/Loop Auto Linked[b]	P	Dead Lockout OFF Dead Lockout ON	P
English (Intl) Idioma Espanol Lingua Portugesa	P	GenCtrl Not Avail GenCtrl Available	

a. Default setting.
b. Only displayed when Loop Automation is made available.

Options 3

OPTIONS 3			S
APGS Allowed APGS Not Allowed	P	APGS Change 60s	P
ACO Not Available ACO Available			

Quick Key selection

QUICK KEY SELECTION			S
Text Description of QK1	P	Text Description of QK3	P
Text Description of QK2	P	Text Description of QK4	P

WSOS Port P8 Comms

WSOS Port P8 Communications			S
Change-Of-State OFF Change-Of-State ON	P	Baud 9600 Selection in the range 600, 1200, 2400, 9600, 19200	P
P8 Not Available Offline Dialling Online	D		
Dialup Number		Default 0, max 18 digit number	P

WSOS Port P9 Comms

WSOS Port P9 Communications			S
Baud 9600 Selection in the range 600, 1200, 2400, 9600, 19200	P	Mode Local Mode Remote[a]	P

a. The default may not be **LOCAL** if the CAPM database is configured differently.

IOEX Status

IOEX Status			S
Inputs 1 – – – – * – – – – – – – 12	D	Local Remote	P
Outputs 1 – * – – – – – * 8	D	IOEX OK Invalid Map Initialising Unplugged Wrong Type	D
Standard IOEX Mapping.[a]			D

a. Any Custom Mapping will be detailed in this text field.

Hit and Run

Hit and Run				S
Hit/Run Close Hit/Run Close	OFF 120s	P	Hit/Run Trip Hit/Run Trip	OFF 120s	P

Appendix E Protection Pages

This appendix shows all the Protection Group of pages on the Operator Control Panel display. Appendix D (page 121) explains the format of this appendix. See Section 9 (page 39) for more information on protection operation.

Protection Setting 1 (A-J)

PROTECTION SETTING 1 (A – J)			P
Group A – J Displayed	P	Copy OFF[a] Copy from # to A Copy from # to B Copy from # to C Copy from # to D Copy from # to E Copy from # to F Copy from # to G Copy from # to H Copy from # to I Copy from # to J Copy from # to ALL (except #) Copy # Incomplete[b] Copy ALL Incomplete	P
Phase Trip 200 Amp	P	Earth Trip 40 Amp	P
Phase Threshold 1.1	P	Earth Threshold 1.1	P

a. Use Select key to scroll through the options. When either the Menu or Enter key is pressed, the copy is performed and the field defaults to the “Copy OFF” display.
b. Advises failure of the copy system.

Protection Setting 2 (A-J)

PROTECTION SETTING 2 (A – J)			P
NPS Trip 40 Amp	P	Seq Reset Time 30s	P
NPS Threshold 1.1	P	Flt Reset Time 50ms	P
NPS Trips to Lockout 1	P	SS Reset Time 1s	P

Protection Setting 3 (A-J)

PROTECTION SETTING 3 (A – J)			P
SEF Trip 4 Amp	P	Live Load Block OFF[a] Live Load Block ON See Power Flow Direction - page 69 and Under and Over Frequency Protection (CAPM 5 only) - page 49.	P
SEF Trips Lockout 1	P	Maximum Time OFF Maximum Time 2.0s	
Trips to Lockout 4	P	Sequence Control OFF Sequence Control ON	P

a. In order for this function to work correctly, the unit must be programmed with the correct Power Flow direction

Protection Setting 4 (A-J)

PROTECTION SETTING 4 (A – J)			P
High Lockout OFF High Lockout ON	P	Loss Phase Prot OFF Loss Phase Prot ON Loss Phase Prot Alm	P
High Lockout 5000A	P	Phase Lost @ 10000V	P
Activation Trip 1 Activation Trip 2 Activation Trip 3 Activation Trip 4	P	Phase Lost 10.0s	P

Protection Setting 5 (A-J)

PROTECTION SETTING 5 (A – J)			P
Inrush OFF Inrush ON	P	Cold Load OFF Cold Load ON	P
Inrush Time 0.10s	P	Cold Load Time 120m	P
Inrush Mult x 4.0	P	Cold Load Mult x 2.0	P

Directional Blocking 1

DIRECTIONAL BLOCKING 1[a]			P
Phase: Trip Fwd&Rev Phase: Trip Rev Phase: Trip Fwd	P	Low V Block OFF Low V Block ON	P
Earth: Trip Fwd&Rev Earth: Trip Rev Earth: Trip Fwd	P	Low Vo Block OFF Low Vo Block ON	P
SEF: Trip Fwd&Rev SEF: Trip Rev SEF: Trip Fwd	P	Low Vo Block OFF Low Vo Block ON	P

a. The Directional Blocking pages are not displayed if {SYSTEM STATUS – OPTIONS 2: DIRB Not Available} is set.

Directional Blocking 2

DIRECTIONAL BLOCKING 2[a]	P
Phase Characteristic Angle45 Deg	P
Earth Characteristic Angle -180 Deg	P

a. The Directional Blocking pages are not displayed if {SYSTEM STATUS – OPTIONS 2: DIRB Not Available} is set.

Directional Blocking 3

DIRECTIONAL BLOCKING 3[a]			P
Nom P-E Volts 6.3kV	P	Vo Balance DISABLED Vo Balance ENABLED Vo Balance Paused Vo Balancing	P P D D
Min Earth Vo 20%	P	Min SEF Vo 5%	P
High Vo DISABLED High Vo 5s	P	High Vo Alarm OFF High Vo Alarm ON	D

a. The Directional Blocking pages are not displayed if {SYSTEM STATUS – OPTIONS 2: DIRB Not Available} is set.

Under/Over Frequency Protection 1

UNDER / OVER FREQUENCY PROTECTION 1 (A - J)		P			P
U / F Trip U / F Trip	OFF ON	P	O / F Trip O / F Trip	OFF ON	P
U / F Trip	at 49.0Hz	P	After	4 cycles	P
O / F Trip	at 52.0Hz	P	After	50 cycles	P

Under/Over Frequency Protection 2

UNDER / OVER FREQUENCY PROTECTION 2[a] (A - J)		P			P
U / F Normal	49.5Hz	P	O / F Normal	50.5Hz	P
Low V Inhibit	5000V	P			
Normal Freq Close OFF Normal Freq Close ON			After 60 secs This display only appears if the Normal Frequency Close is ON.		P

a. CAPM 5 feature only.

Phase Protection Trip

PHASE PROTECTION TRIP NUMBER 1, 2, 3, 4 (A – J)		P			P
IEC255 Curves (1, 2 or 3) Definite Time Instantaneous Only IEEE Curves (1, 2 or 3) User Defined Curve (1, 2, 3, 4 or 5) User Defined Curves Not Set Additional Curve Selection[a]		P	Time Multiplier 1.00 1.00s Time Multiplier 1.00 Time Multiplier 1.00		P
No Instantaneous Instant Mult x 1.0		P	Reclose Time 1.0s Reclose time not available on trip 4		P
Minimum 0.00s		P	Additional 0.00s		P

a. See Appendices A, B and C for the available curves.

Phase Single Shot Protection Trip

PHASE SINGLE SHOT PROTECTION TRIP (A – J)		P			P
IEC255 Curves (1, 2 or 3) Definite Time Instantaneous Only IEEE Curves (1, 2 or 3) User Defined Curve (1, 2, 3, 4 or 5) User Defined Curves Not Set Additional Curve Selection[a]		P	Time Multiplier 1.00 1.00s Time Multiplier 1.00 Time Multiplier 1.00		P
No Instantaneous Instant Mult x 1.0		P			
Minimum 0.00s		P	Additional 0.00s		P

a. See Appendices A, B and C for the available curves.

Phase Work Tag Protection Trip

PHASE WORK TAG PROTECTION TRIP (A – J)			P
IEC255 Curves (1, 2 or 3) Definite Time Instantaneous Only IEEE Curves (1, 2 or 3) User Defined Curve (1, 2, 3, 4 or 5) User Defined Curves Not Set Additional Curve Selection[a]	P	Time Multiplier 1.00 1.00s Time Multiplier 1.00 Time Multiplier 1.00	P
No Instantaneous Instant Mult x 1.0	P		
Minimum 0.00s	P	Additional 0.00s	P

a. See Appendices A, B and C for the available curves.

Earth Protection Trip

EARTH PROTECTION TRIP NUMBER 1, 2, 3, 4 (A – J)			P
IEC255 Curves (1, 2 or 3) Definite Time Instantaneous Only IEEE Curves (1, 2 or 3) User Defined Curve (1, 2, 3, 4 or 5) User Defined Curves Not Set Additional Curve Selection[a]	P	Time Multiplier 1.00 1.00s Time Multiplier 1.00 Time Multiplier 1.00	P
No Instantaneous Instant Mult x 1.0	P	SEF Definite 5.0s	P
Minimum 0.00s	P	Additional 0.00s	P

a. See Appendices A, B and C, for the available curves.

Earth Single Shot Protection Trip

EARTH SINGLE SHOT PROTECTION TRIP (A – J)			P
IEC255 Curves (1, 2 or 3) Definite Time Instantaneous Only IEEE Curves (1, 2 or 3) User Defined Curve (1, 2, 3, 4 or 5) User Defined Curves Not Set Additional Curve Selection[a]	P	Time Multiplier 1.00 1.00s Time Multiplier 1.00 Time Multiplier 1.00	P
No Instantaneous Instant Mult x 1.0	P	SEF Definite 5.0s	
Minimum 0.00s	P	Additional 0.00s	P

a. See Appendices A, B and C for the available curves.

Earth Work Tag Protection Trip

EARTH WORK TAG PROTECTION TRIP (A – J)			P
IEC255 Curves (1, 2 or 3) Definite Time Instantaneous Only IEEE Curves (1, 2 or 3) User Defined Curve (1, 2, 3, 4 or 5) User Defined Curves Not Set Additional Curve Selection[a]	P	Time Multiplier 1.00 1.00s Time Multiplier 1.00 Time Multiplier 1.00	P
No Instantaneous Instant Mult x 1.0	P	SEF Definite 5.0s	
Minimum 0.00s	P	Additional 0.00s	P

a. See Appendices A, B and C for the available curves.

NPS Protection Trip

NPS PROTECTION TRIP NUMBER 1, 2, 3, 4 (A – J)			P
IEC255 Curves (1, 2 or 3) Definite Time Instantaneous Only IEEE Curves (1, 2 or 3) User Defined Curve (1, 2, 3, 4 or 5) User Defined Curves Not Set Additional Curve Selection[a]	P	Time Multiplier 1.00 1.00s Time Multiplier 1.00 Time Multiplier 1.00	P
No Instantaneous Instant Mult x 1.0	P		
Minimum 0.00s	P	Additional 0.00s	P

a. See Appendices A, B and C, for the available curves.

NPS Single Shot Protection Trip

NPS SINGLE SHOT PROTECTION TRIP (A-J)			P
IEC255 Curves (1, 2 or 3) Definite Time Instantaneous Only IEEE Curves (1, 2 or 3) User Defined Curve (1, 2, 3, 4 or 5) User Defined Curves Not Set Additional Curve Selection[a]	P	Time Multiplier 1.00 1.00s Time Multiplier 1.00 Time Multiplier 1.00	P
No Instantaneous Instant Mult x 1.0	P		
Minimum 0.00s	P	Additional 0.00s	P

a. See Appendices A, B and C, for the available curves.

NPS Work Tag Protection Trip

NPS WORK TAG PROTECTION TRIP (A-J)			P
IEC255 Curves (1, 2 or 3) Definite Time Instantaneous Only IEEE Curves (1, 2 or 3) User Defined Curve (1, 2, 3, 4 or 5) User Defined Curves Not Set Additional Curve Selection[a]	P	Time Multiplier 1.00 1.00s Time Multiplier 1.00 Time Multiplier 1.00	P
No Instantaneous Instant Mult x 1.0	P		
Minimum 0.00s	P	Additional 0.00s	P

a. See Appendices A, B and C, for the available curves.

Appendix F Measurement Pages

This appendix shows the Measurement Group of pages on the Operator Control Panel display.

Appendix D (page 121) explains the format of this appendix.

See Section 12 (page 69) for more information on measurement functionality.

Instantaneous Demand

INSTANTANEOUS DEMAND					M
Earth	0 Amp	D	A Phase	250 Amp	D
NPS	25 Amp	D	B Phase	250 Amp	D
			C Phase	250 Amp	D

System Measurements

SYSTEM MEASUREMENTS				M
Frequency 50.0 Hz Freq Unavailable	D	Power (P)	2479 kW	D
		Power (Q)	200 kVAR	D
		Power Factor	0.93	D

Source Side Voltages

Either Phase to Earth or Phase to Phase.

SOURCE SIDE VOLTAGES	M
A1 phase to earth 12700 Volt	D
B1 phase to earth 12700 Volt	D
C1 phase to earth 12700 Volt	D

SOURCE SIDE VOLTAGES	M
A1 – B1 phase to phase 22000 Volt	D
B1 – C1 phase to phase 22000 Volt	D
C1 – A1 phase to phase 22000 Volt	D

Load Side Voltages

Either Phase to Earth or Phase to Phase.

LOAD SIDE VOLTAGES	M
A2 phase to earth 12700 Volt	D
B2 phase to earth 12700 Volt	D
C2 phase to earth 12700 Volt	D

LOAD SIDE VOLTAGES	M
A2 – B2 phase to phase 22000 Volt	D
B2 – C2 phase to phase 22000 Volt	D
C2 – A2 phase to phase 22000 Volt	D

Supply Outages

SUPPLY OUTAGES					M
Measure Outages OFF Measure Outages ON		P	Outage Duration	60 s	P
Source outages	2	R	Duration	4h14m56s	R
Load outages	3	R	Duration	6h23m24s	R

Monthly Maximum Demand

MONTHLY MAXIMUM DEMAND				M
Jan/2001		total	28865 kWh	D
peak period	07 / 01 / 2001	17:15:00		D
peak demand	31141 kW	0.93 PF		D

Weekly Maximum Demand

WEEKLY MAXIMUM DEMAND				M
Week ending	10 / 01 / 2001	total	7565 kWh	D
peak period	07 / 01 / 2001	17:15:00		D
peak demand	31141 kW	0.93 PF		D

Average Demand

AVERAGE DEMAND				M
10 / 01 / 2001	13:45:00	A phase	123 Amp	D
2749 kW		B phase	128 Amp	D
0.93 PF		C phase	121 Amp	D

Appendix G List of Events

The following table lists the events that can appear in the Event Log, in alphabetical order.

Event Text	Explanation
A/B/C 1/2 Dead A/B/C 1/2 Live	A terminal has changed from live to dead. A terminal has changed from dead to live. See "Loss of Supply Events" (page 67).
A/B/C Phase LOST	Loss of supply has occurred on this phase. See "Loss Of Phase Protection" (page 49).
A Max NN Amp B Max NN Amp C Max NN Amp	Following pickup of the overcurrent protection element on A, B or C phase, the maximum fault current recorded was NN Amps. This event is logged only after the current has fallen back below the phase setting current. See "Changes to protection groups are put into service as for any other changes to the active protection group.Overcurrent Protection" (page 43) and "Protection Generated Events" (page 67).
ACR Open ACR Closed	On power up and switch re-connection the circuit breaker is either open or closed.
Automatic Reclose	The circuit breaker was automatically re-closed following a protection trip. See "Auto-Reclose" (page 52) and "Protection Generated Events" (page 67).
Auto Reclose OFF	Auto Reclose has been turned OFF by a local or remote operator.
Auto Reclose ON	Auto Reclose has been turned ON by a local or remote operator.
Aux Supply Fail	The auxiliary power supply has failed. See "Tropical, Moderate and Temperate Versions" (page 21).
Aux Supply Normal	The auxiliary power supply has become normal. See "Auxiliary Power Source" (page 22).
Battery Low Volts	The battery voltage is below the low battery threshold.
Battery Normal	The battery is in the normal range
Battery OFF	The battery is not connected.
Battery Overvolt	The battery voltage is too high. This will only occur if there is a battery charger hardware failure.[a]
Cap Chrg *status*	Logged if a trip/close request is denied due to a capacitor inverter problem. Where *status* is the current status of the inverter, for example “Cap Chrg Resting”. See "Abnormal Operating Conditions" (page 106).
Cap *failure mode*	Trip and/or close capacitors did not charge correctly. Where *failure mode*, is the cause of the failure. For example, “CAP Excess Closes”. See "Abnormal Operating Conditions" (page 106)[a].
Capmload Reset	The electronic controller has been reset by the Loader.
Close Blocking ON	The circuit breaker is prevented from closing. See "Inputs - Standard Mapping" (page 86).
Close Blocking OFF	Close blocking has been disabled. The circuit breaker will now close when requested. See "Inputs - Standard Mapping" (page 86).
Close Coil Connect Close Coil Isolate	The Close solenoid isolate switch on the operator control panel was changed to the Enable/Isolate position. See Figure 4 (page 29).
Close Disabled	This event is generated when the Close Isolate switch on a remote operator panel is set to Isolated or OFF. In this condition closing is disabled in the software *but* the Close coil is not electrically isolated.
Close Enabled	This event is generated when the Close Isolate switch on a remote operator panel is set to Enabled or ON. In this condition the software close disable is removed.
Current >= 5000A	The circuit breaker tripped with a current above the High Current Lockout setting whilst the High Current Lockout was effective, the event shows the value of setting at the time the event occurred. See "High Current Lockout" (page 53).
Denied Gas Low	This event is recorded if an operation is attempted with SF_6 pressure low and Gas Low Lockout ON.
Denied Wrong Mode	When the switch is in a different mode (Local, Remote or Work Tag Applied) to the device which attempted the close. See Section 8 (page 35).
Disconnected	The circuit breaker has been disconnected.
E Max NN Amp	Following pickup of the overcurrent protection element on earth or SEF, the maximum fault current recorded was NN Amps. This event is logged only after the current has fallen back below the earth setting current. See "Changes to protection groups are put into service as for any other changes to the active protection group.Overcurrent Protection" (page 43)
Earth Prot OFF	Earth fault protection has been turned OFF by a local or remote operator.
Earth Prot ON	Earth fault Protection has been turned ON by a local or remote operator.
Earth Prot Trip	A protection trip was generated by the Earth overcurrent protection element. See "Changes to protection groups are put into service as for any other changes to the active protection group.Overcurrent Protection" (page 43) and See "Protection Generated Events" (page 67).
Earth Dir Arm	An earth protection pickup occurs and tripping is enabled in the faulted direction. The trip can take place as normal. See Section 10 (page 59). This event only occurs when Directional Blocking is ON.

Event Text	Explanation
Earth Dir Block	An earth protection pickup occurs but tripping is blocked in the faulted direction. The circuit breaker will not trip. See Section 10 (page 59). This event only occurs when Directional Blocking is ON.
Earth Low Vo Arm	An earth protection pickup occurs and tripping is enabled because the residual voltage (Vo) is less than the user-specified level and Low Vo blocking is OFF. The trip can take place as normal. See Section 10 (page 59). This event only occurs when Directional Blocking is ON.
Earth Low Vo Block	An earth protection pickup occurs and tripping is blocked because the residual voltage (Vo) is less than the user-specified level and Low Vo blocking is ON. The circuit breaker will not trip. See Section 10 (page 59). This event only occurs when Directional Blocking is ON.
Generator Start Req	Request generator start
Generator Stop Req	Request generator stop
Generator Running	Generator running.
Generator Stopped	Generator has stopped running.
GenCtrl Trip Req	Generator control opening recloser in preparation for starting the generator.
GenCtrl Close Req	Generator control closing recloser to restore line supply.
GenCtrl ON	Switching Generator Control On.
GenCtrl OFF	Switching Generator Control Off.
Hit and Run On	Start of Hit and Run period.
Hit and Run Off	End of Hit and Run request countdown, or timeout.
IOEX Input XX On	IOEX Input XX has changed from the Off state to the On state (where XX is from 01 to 12).
IOEX Input XX Off	IOEX Input XX has changed from the On state to the Off state (where XX is from 01 to 12).
IOEX Output XX On	IOEX Output XX has changed from the Off state to the On state (where XX is from 01 to 08).
IOEX Output XX Off	IOEX Output XX has changed from the On state to the Off state (where XX is from 01 to 08).
Live Load Blocking	A close request was disregarded due to a load side terminal being alive. See "Under and Over Frequency Protection (CAPM 5 only)" (page 49).
Load out 59 m 59 s Load out 99 h 59 m Load out 9999 h	The circuit breaker load terminals experienced a supply outage up to 59 minutes 59 seconds. The circuit breaker load terminals experienced a supply outage up to 99 hours 59 minutes. The circuit breaker load terminals experienced a supply outage >10,000 hours. See Section 13 (page 73).
Load Supply OFF/ON	All three load side voltages are OFF/ON. See "Loss of Supply Events" (page 67).
Loader: Close Iso Loader: Trip Iso	The close/trip isolate needs to be activated to allow a new program to be transferred to the controller.
LOCAL CONTROL ON	A local operator has put the controller in local mode.
Lockout	The protection went to lockout and will not perform any more automatic recloses, See "Lockout Conditions" (page 53) and "Protection Generated Events" (page 67).
LOP Prot Alarm	A LOP has occurred but LOP tripping is disallowed.
Loss Of Phase Prot	A protection trip was generated by the Loss Of Phase protection. See "Loss Of Phase Protection" (page 49).
Low Power Mode	If the power supply voltage reduces below a threshold for a certain time, the radio supply is turned off immediately. The recloser will still operate but will go to lockout if the capacitors cannot be charged quickly enough. See "Abnormal Operating Conditions" (page 106).
Mechanical Trip	Circuit breaker was tripped using the manual mechanical trip lever.
Mechanism Fail	The circuit breaker has failed to close or trip electrically.[a.]
Normal Freq Close (CAPM 5 only)	The Source frequency has returned to normal and a Close request has been issued.
Normal Power Mode	If the power supply voltage returns to normal then the power mode will return to normal after 15 min. See "Abnormal Operating Conditions" (page 106).
NP-xxxxxx Connected	Circuit breaker with serial number xxxxxx has been connected.
NPS Prot Trip	The recloser has tripped on Negative Phase Sequence Protection.
NPS 80 A	The maximum Negative Phase Sequence Current recorded while protection was picked up was 80 A.
NPS Prot Alarm	Negative Phase Sequence Current has exceeded the pickup setting for the user-specified time.
New SCEM Data	New SCEM data was written to the SCEM.
Outages ON Outages OFF	The operator (local or remote) has turned ON or OFF the supply outage measurement functions. See Section 13 (page 73).
Outages Reset	The operator (local or remote) has reset the four outage counters. See Section 13 (page 73).
Over Freq Pickup (CAPM 5 only)	The Source frequency has been equal to or above the Over Frequency trip threshold.

Event Text	Explanation
Over Freq Reset (CAPM 5 only)	The Source frequency has fallen to equal or above the Over Frequency trip threshold plus the dead band.
Over Freq Trip (CAPM 5 only)	The Source frequency has been equal to or above the Over Frequency threshold for the Trip Delay count and a trip request has been issued.
Phase Dir Arm	A phase overcurrent pickup occurs and tripping is enabled in the faulted direction. The trip can take place as normal. See Section 10 (page 59). This event only occurs when Directional Blocking is ON.
Phase Dir Block	A phase overcurrent pickup occurs but tripping is blocked in the faulted direction. The circuit breaker will not trip. See Section 10 (page 59). This event only occurs when Directional Blocking is ON.
Phase Low V Arm	A phase protection pickup occurs and tripping is enabled because the voltage on all three phases (V) is less than 500 V and Low V blocking is OFF. The trip takes place as normal. See Section 10 (page 59). This event only occurs when Directional Blocking is ON.
Phase Low V Block	A phase protection pickup occurs and tripping is blocked because the voltage on all three phases (V) is less than 500 V and Low V blocking is ON. The circuit breaker does not trip. See Section 10 (page 59). This event only occurs when Directional Blocking is ON.
Phase Prot Trip	A protection trip was generated by the Phase overcurrent protection element. See "Changes to protection groups are put into service as for any other changes to the active protection group.Overcurrent Protection" (page 43) and See "Protection Generated Events" (page 67).
Phasing *order*	The Terminal Designation has been changed where *order* is one of the following – ABC, ACB, BAC, BCA, CAB, CBA. See "Switchgear Terminal Designation" (page 69).
Pickup	One of the protection elements picked up (phase, earth or SEF). This event is generated by the first element to pick up, if more elements pick up subsequently then no more pickup events are generated until all the elements have reset. See "Changes to protection groups are put into service as for any other changes to the active protection group.Overcurrent Protection" (page 43) and "Protection Generated Events" (page 67).
Power Up	The electronics just had power applied or had a power up reset or watchdog reset. The time displayed will be approximately the time that power down occurred plus 1 sec.
Power Down	The electronics was powered down.
Protection OFF	All of the protection features have been turned off. The circuit breaker will only perform a manual trip or close. See "Protection OFF and Pickup Flags" (page 40).
Protection ON	Protection has been turned back on. See "Protection OFF and Pickup Flags" (page 40).
Prot Group A – J Active	Protection group A – J is active. Written to event whenever the active groups change or a trip occurs. See "Protection Settings and Protection Groups" (page 42).
Protocol Reset	The electronics have been reset by a protocol.
Prot Trip NN	Trip NN in the reclose sequence
P9 Baud xxxxx	The operator has altered the baud rate of P9, via the panel or WSOS, to be the value shown. Where xxxxx is one of 19200, 9600, 2400 or 1200.
P9 Mode yyyyy	The operator has altered P9's mode, via the panel or WSOS, to be that shown. Where yyyyy is either **Local** or **Remote**.
QKx <function>	Quick Key X has been mapped to the function. Thus pressing this Quick Key will now allow alteration of the <function> setting. Eg. **"QK1 Local/Remote"**[b]
Radio Supply Failed	The built-in radio supply has failed.[a.]
Remote Control ON	A local operator has put the controller in remote mode.
SCEM Corrupted	The SCEM records are corrupted.[a.]
SCEM *type* Fail	Where *type* can be Memory or Write.[a.]
SCEM Type *type*	The control cable has been connected to a different type of SCEM where *type* can be SCEM 9, 93C46 or Unknown.
SEF Dir Arm	A SEF pickup occurs and tripping is enabled in the faulted direction. The trip can take place as normal. See Section 10 (page 59). This event only occurs when Directional Blocking is ON.
SEF Dir Block	A SEF pickup occurs but tripping is blocked in the faulted direction. The circuit breaker will not trip. See Section 10 (page 59). This event only occurs when Directional Blocking is ON.
SEF Low Vo Arm	A SEF protection pickup occurs and tripping is enabled because the residual voltage (Vo) is less than the user-specified level and Low Vo blocking is OFF. The trip can take place as normal. See Section 10 (page 59). This event only occurs when Directional Blocking is ON.
SEF Low Vo Block	A SEF protection pickup occurs and tripping is blocked because the residual voltage (Vo) is less than the user-specified level and Low Vo blocking is ON. The circuit breaker will not trip. See Section 10 (page 59). This event only occurs when Directional Blocking is ON.

Event Text	Explanation
SEF Prot Trip	A protection trip was generated by the SEF overcurrent protection element. See "Changes to protection groups are put into service as for any other changes to the active protection group.Overcurrent Protection" (page 43) and "Protection Generated Events" (page 67).
SEF Prot OFF	SEF protection has been turned OFF by a local or remote operator.
SEF Prot ON	SEF protection has been turned ON by a local or remote operator.
Sequence Reset	The sequence reset timer has expired. This causes the protection relay to reset to the start of the circuit breaker sequence for the next fault. See "Sequence Reset" (page 53) and "Protection Generated Events" (page 67).
Sequence Advance	When sequence control is ON this event is generated when the sequence counter is advanced due to a downstream fault which did not cause a protection trip. See "Sequence Control" (page 57).
SF6 Pressure Normal SF6 Pressure Low Pressure Invalid	The SF_6 pressure status has changed state.
Single Shot	A trip occurred whilst in Single Shot Mode. See Section (page 54).
Source out 59 m 59 s Source out 99 h 59 m Source out 9999 h	The circuit breaker source terminals experienced a supply outage up to 59 minutes 59 seconds. The circuit breaker source terminals experienced a supply outage up to 99 hours 59 minutes. The circuit breaker source terminals experienced a supply outage >10,000 hours. See Section 13 (page 73).
Source Dead	Circuit breaker cannot close due to operation of Dead Lockout.
Source 1/ Load 2 Source 2/ Load 1	The operator (local or remote) has changed the power flow direction. Refer Section (page).
Source Supply OFF/ON	All three source side voltages are OFF/ON. See "Typical Event Log Displays" (page 68).
Source Trip Req *Source* Close Req	A trip/close request was issued from the source. Where source can be one of, Panel, WSOS, IOEX, Protocol, etc. Panel = Operator Control Panel. WSOS = Windows Switchgear Operating System IOEX = Input Output Expander Card. Protocol = This is a communications protocol such as DNP3.
Trip Coil Connect Trip Coil Isolate	The Trip solenoid isolate switch on the operator control panel was changed to the Enable/Isolate position. See Figure 4 (page 29).
Trip Disabled	This event is generated when the Trip Isolate switch on a remote operator panel is set to Isolated or OFF. In this condition tripping is disabled in the software but the trip coil is not electrically isolated.
Trip Enabled	This event is generated when the Trip Isolate switch on a remote operator panel is set to Enabled or ON. In this condition the software trip disable is removed.
Under Freq Pickup (CAPM 5 only)	The Source frequency has been equal to or below the Under Frequency trip threshold.
Under Freq Reset (CAPM 5 only)	The Source frequency has risen to equal or above the Under Frequency trip threshold.
Under Freq Trip (CAPM 5 only)	The Source frequency has been equal to or below the Under Frequency threshold for the Trip Delay count and a trip request has been issued.
U contact < 20% V contact < 20% W contact < 20%	Less than 20% contact life remaining in the U1-U2, V1-V2 or W1-W2 vacuum interrupter. See "Contact Life" (page 18)
Vo 99999V	This event is generated to record the value of the residual voltage (Vo) at the time of the maximum earth or SEF current. See "Directional Blocking" (page 59). This event only occurs when Directional Blocking is ON.
Work Tag	A trip occurred whilst the Work Tag was applied.
Work Tag Applied Work Tag OFF	The Work Tag has been applied/turned off. See "Work Tags and Controller Mode" (page 35)
Wrong Switch No *n*	This version of software and the connected switch type are incompatible. “n” is the switchgear type. The controller will have to be loaded with the correct software.
<Time/Date>	A new time/date has been set.

a. If this event occurs the equipment may require maintenance. Contact the manufacturer or Distributor for advice.
b. This event will be logged if the Quick Key configuration is changed via the panel or WSOS.

Appendix H Replaceable Parts & Tools

All replacement parts listed in the following table are available from the manufacturer, special purpose tools are also listed. Surge arresters of various ratings are also available, contact your distributor for part numbers and pricing.

Part	Part Number
1100mm Bushing Boot Silicone	R01-318
770mm Bushing Boot EPDM	INS019F
777mm Bushing Boot Silicone	INS021
Antenna Surge Arrester	ELCMIS0211
Batteries - Panasonic No LCR12V7.2P 12 Volt	BAT8250012
Boot Clamping Ring	N01-055
Boot Clamping Ring Spanner	R01-260
Bushing Boot Installation Tool (For use in cold climates)	N05-604
Cable Tail Kit: Quantity 6 off 250 Amp, 3m cable fitted with bushing boot and lug.	N01-693
Cable Tail Kit: Quantity 6 off 400 Amp, 3m cable fitted with bushing boot and lug	N01-612
Cable Tail Kit: Quantity 6 off 630 Amp, 3m cable fitted with bushing boot and screw termination	N01-694
Circuit Breaker cable entry compartment cover gasket	N01-008
Control and Protection Module: CAPM 4 CAPM 5	 ELCCAPM 4 ELCCAPM 5
Control Cable 7m long (Also available in 3.5,4,8,10,11and 20 metre lengths)	N03-602
Control Cubicle: • Tropical version • Moderate version • Temperate version	 PTCC-TRO PTCC-MOD PTCC-TEM
Control Cubicle - temperate version heater 240 VAC	ELCM1S0140
Control Cubicle - temperate version thermostat	ELCM1S0142
Control Cubicle heater 120 VAC	ELCM150143
Control Cubicle Door Seal • TESA tape DF50604/1224	NEO0910082
Control Cubicle Entry Module (CCEM)	ELCCCEM1
Electronics Compartment Cover Gasket	N03-036
Ferrite Filters (ID = 10mm) for incoming cable.	ELCIND0030 (two reqd)
Gas Fill Adapter: • Includes cylinder adapter	N05-615
Gas Fill Valve O-ring: • Nitrile o-ring, C7-209	ORG025024
Gas Fill Valve Cap	N01-383
Manual Operation Set	N07-600
Operator Panel Subsystem Backlit Display & Quick Keys	N03-622
Quick Key Stickers - International English	N03-682
Quick Key Stickers - Portuguese	N03-684
Quick Key Stickers - Spanish	N03-685
Radio Cable (intermediate) V23	N03-530
SF_6 Gas Cylinder Size D - LINDEGAS	GAS064011
Silicone electrical grease	LUB058044
Silicone O-Ring grease • Dow 111 Valve and o-ring grease.	LUB058040
Test and Training Set (TTS)	TTS1-02
Windows Switchgear Operating System (WSOS)	Refer to distributor

Appendix I Control Cubicle Schematics

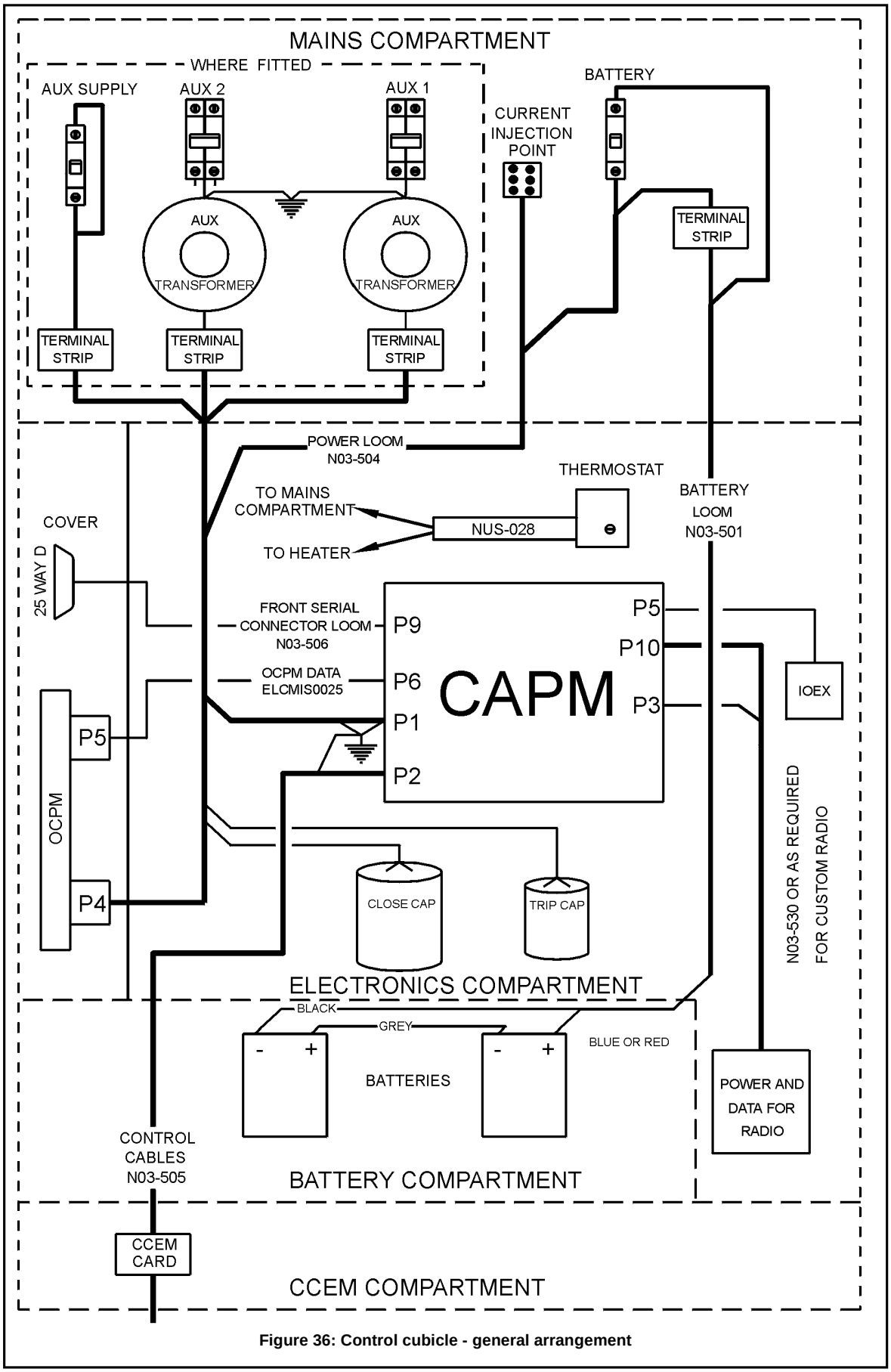

Figure 36: Control cubicle - general arrangement

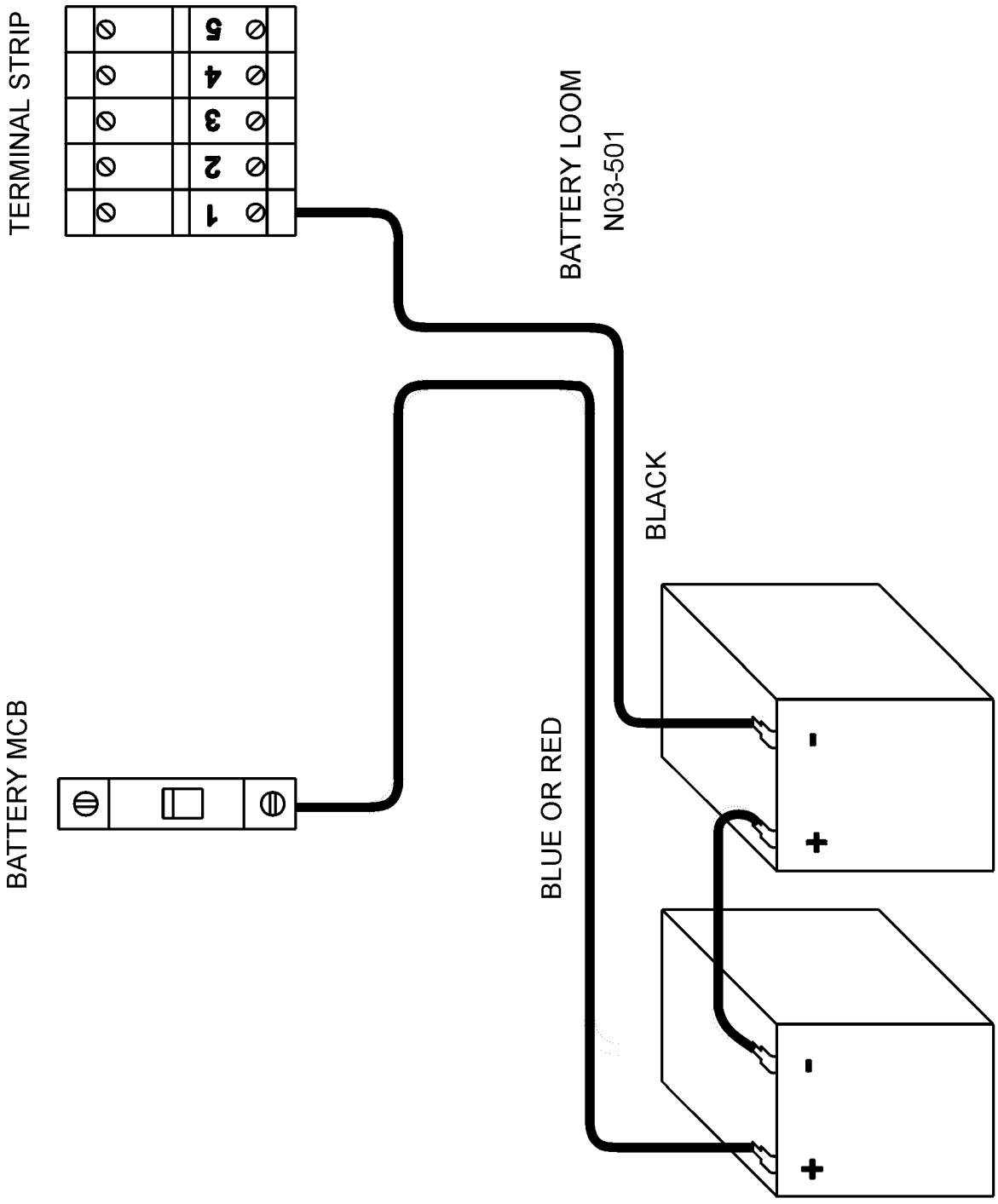

Figure 37: Control cubicle - battery loom

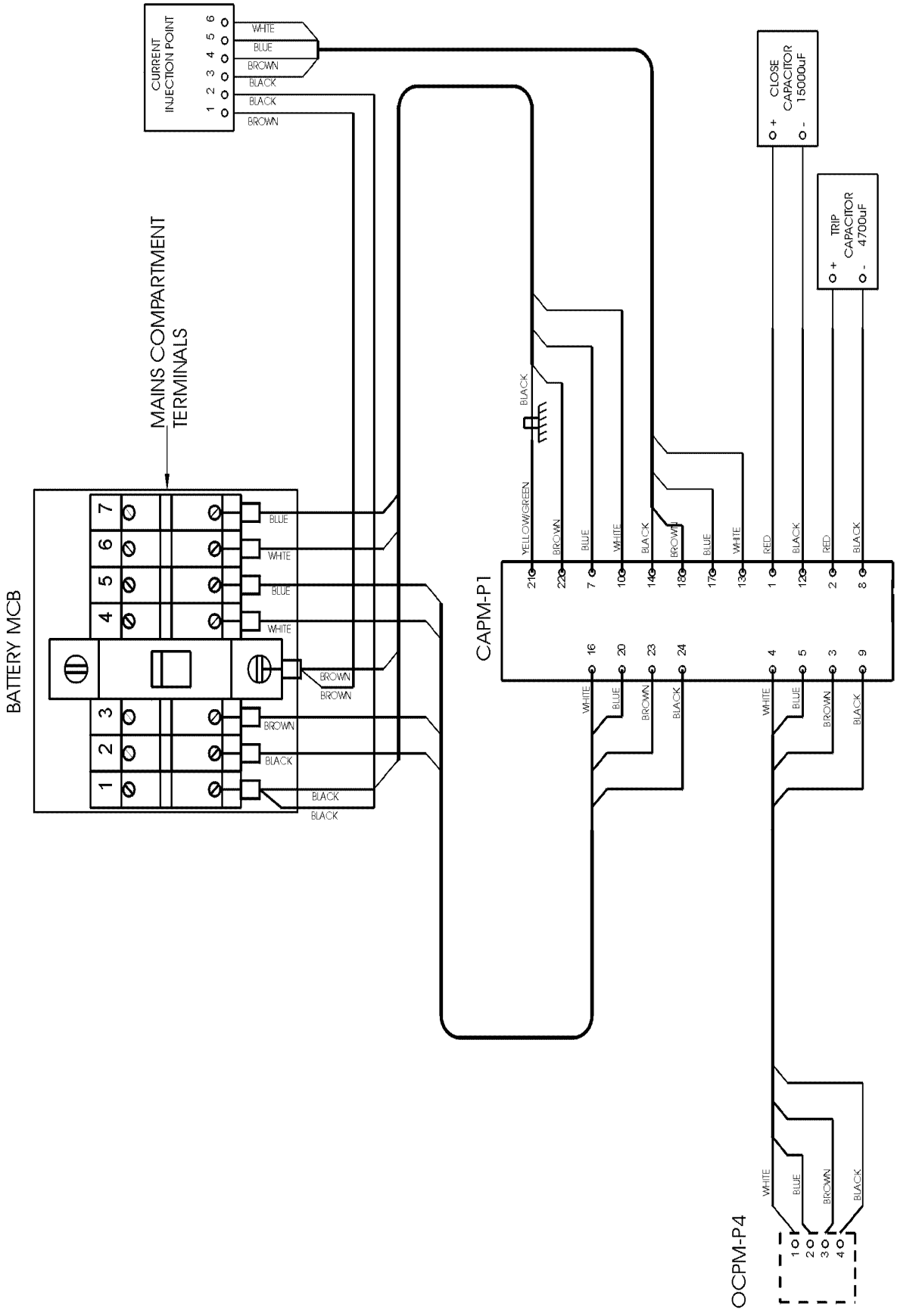

Figure 38: Control cubicle - main loom connection

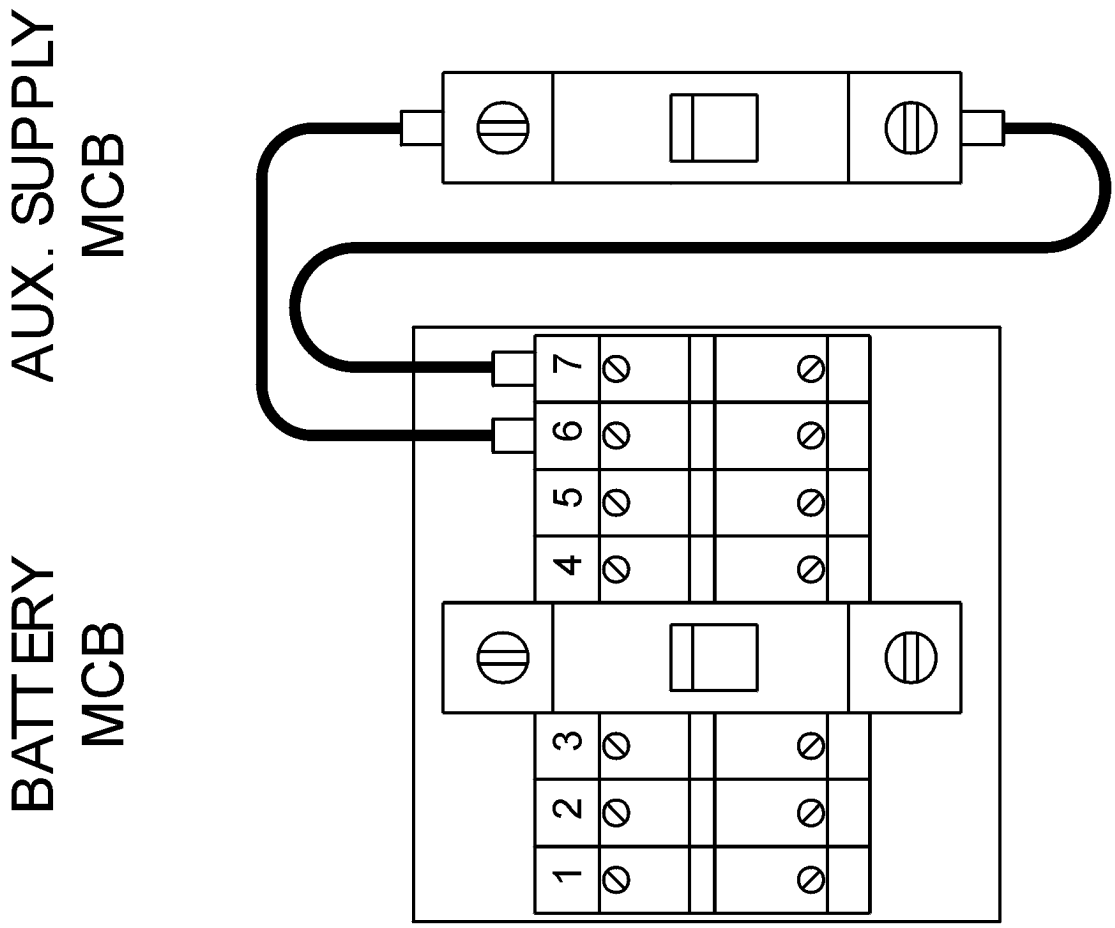

Figure 39: Control cubicle - Single integrated aux power supply

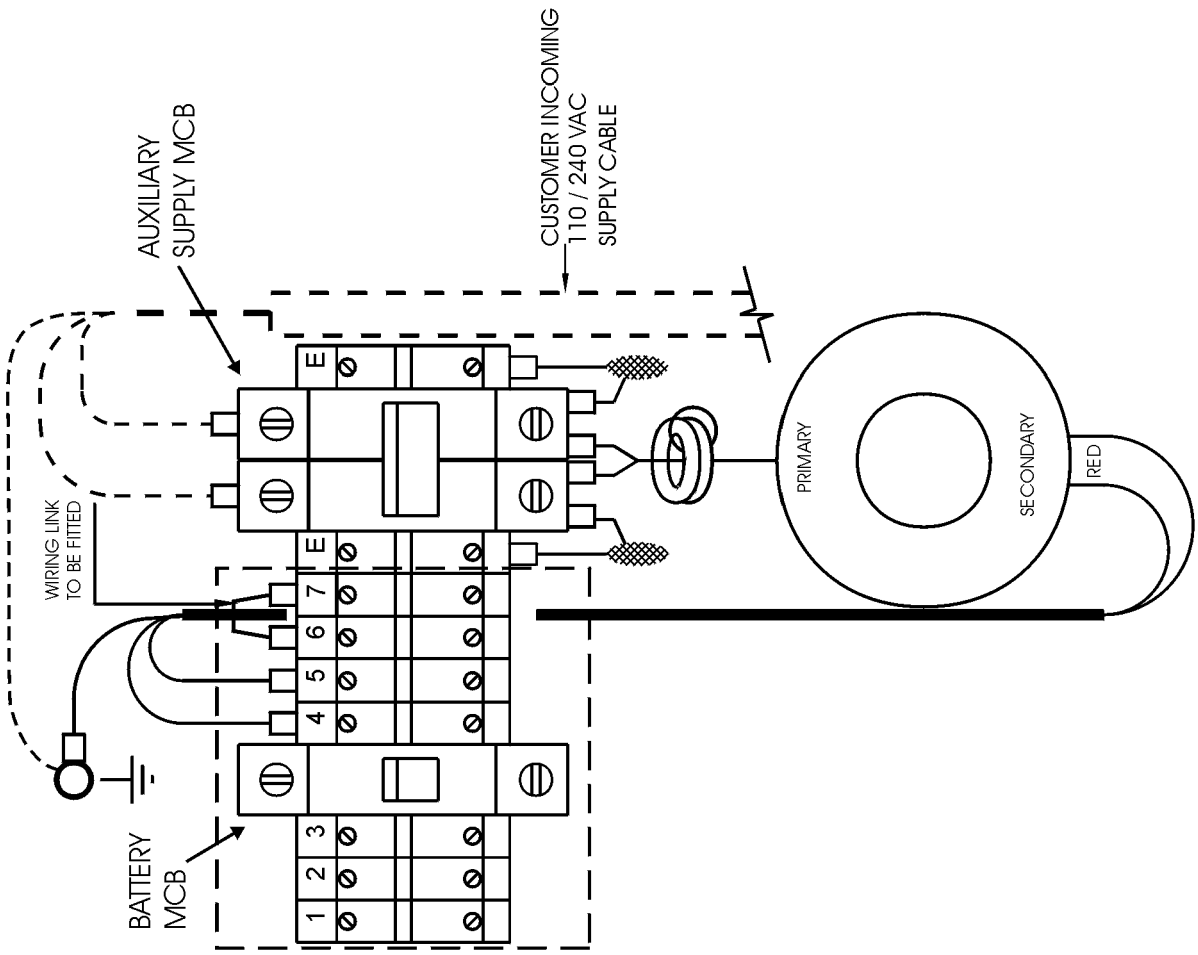

Figure 40: Control cubicle - Single LV aux power supply

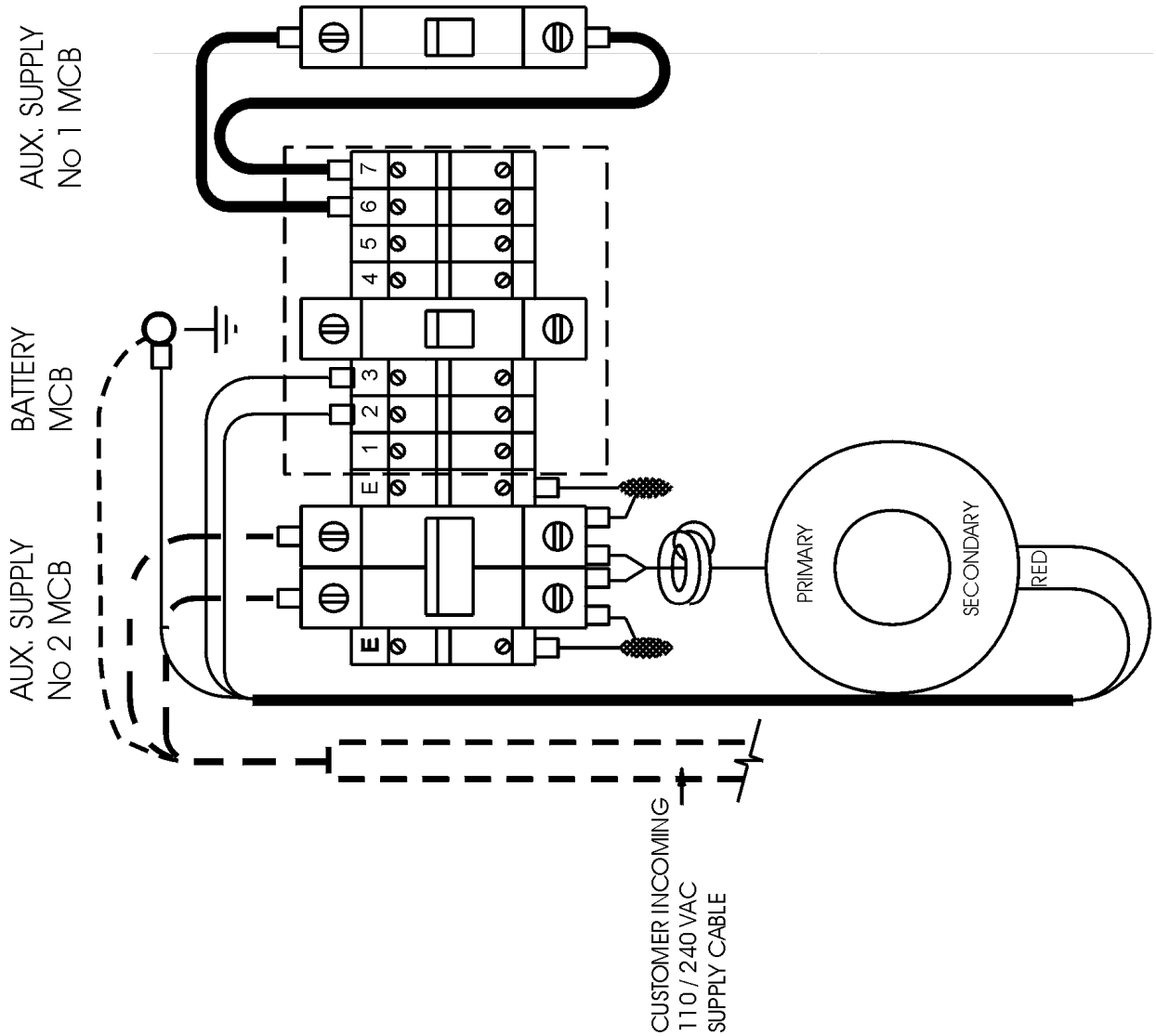

Figure 41: Control cubicle - Integrated plus LV aux power supply

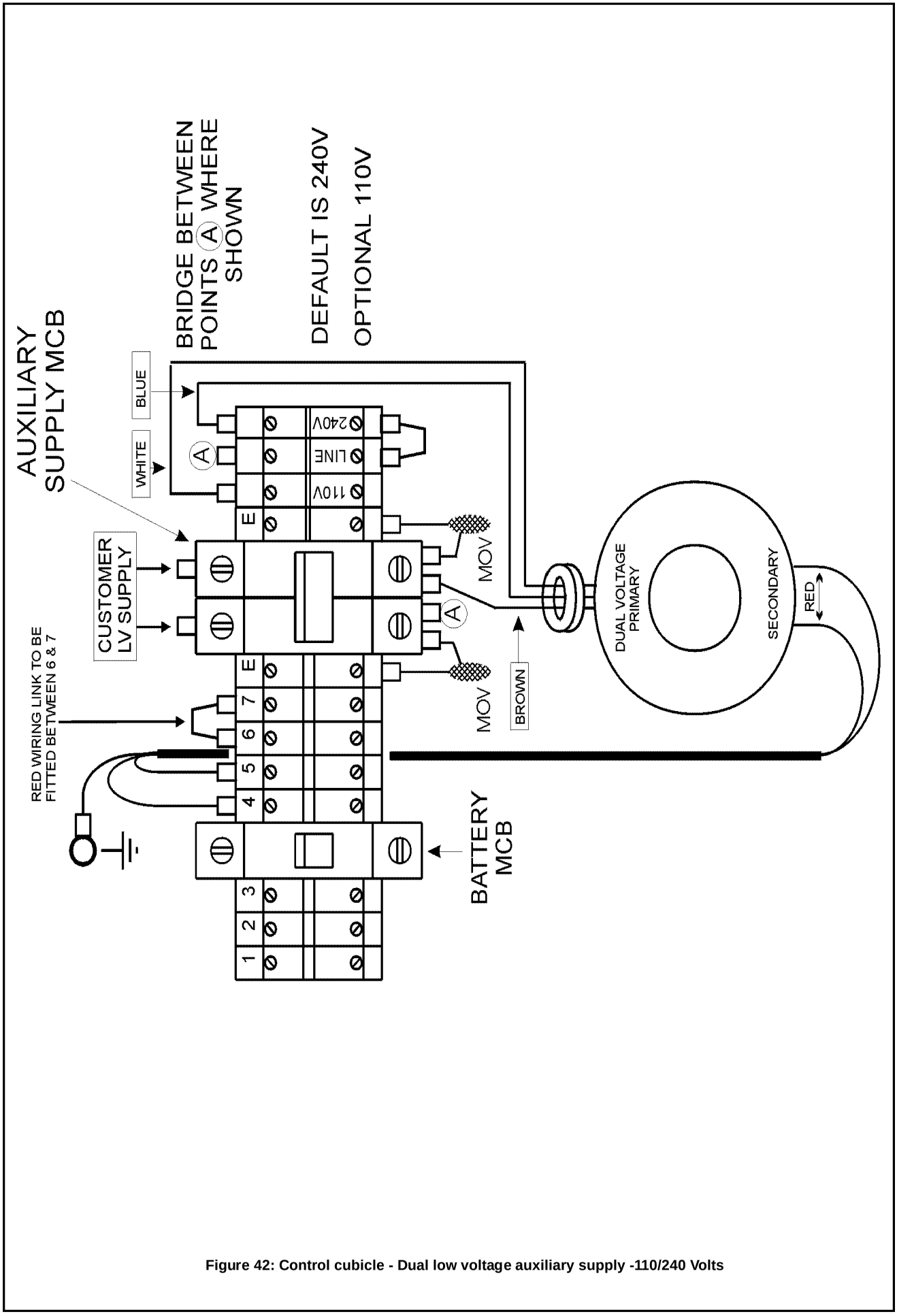

Figure 42: Control cubicle - Dual low voltage auxiliary supply -110/240 Volts

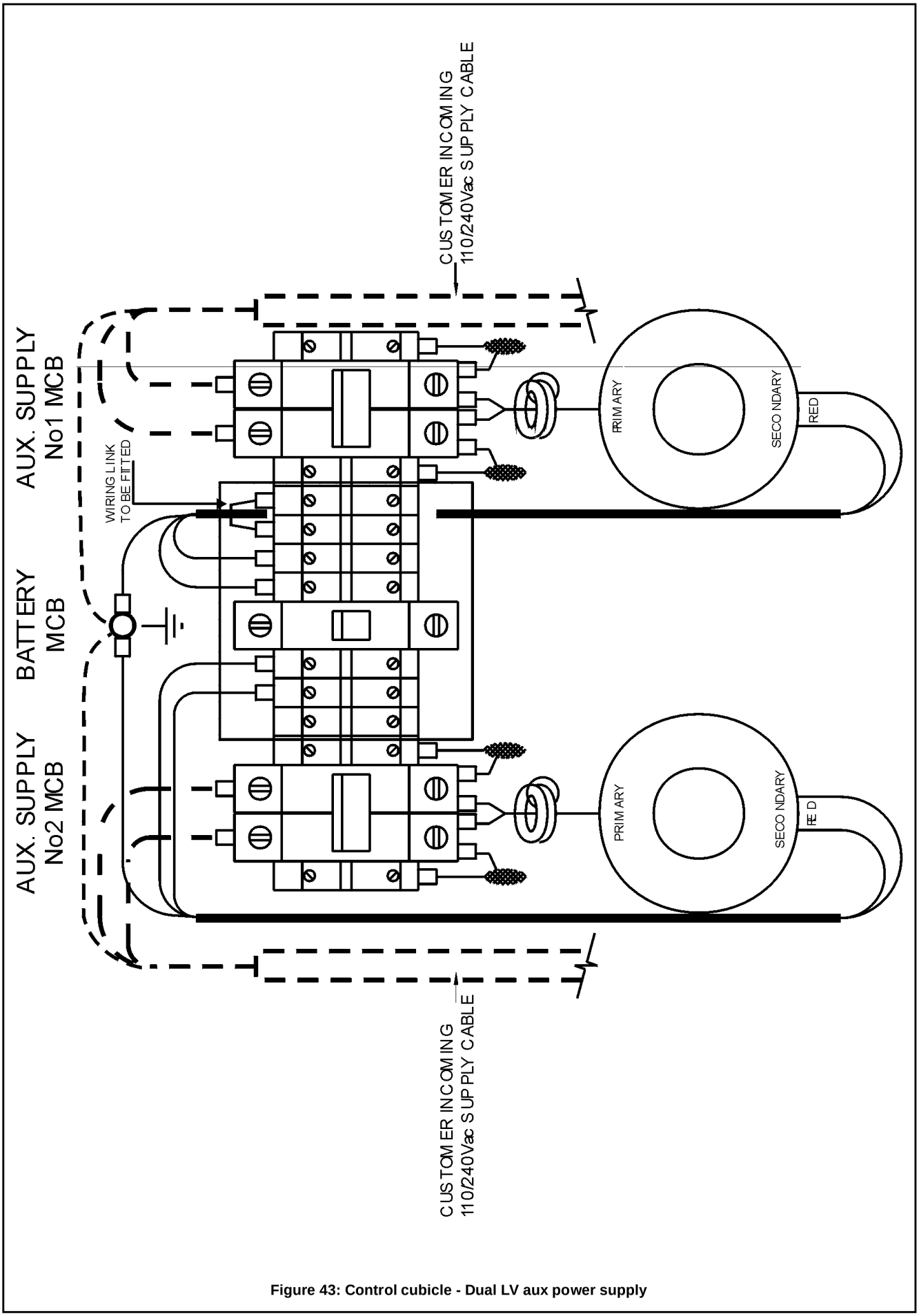

Figure 43: Control cubicle - Dual LV aux power supply

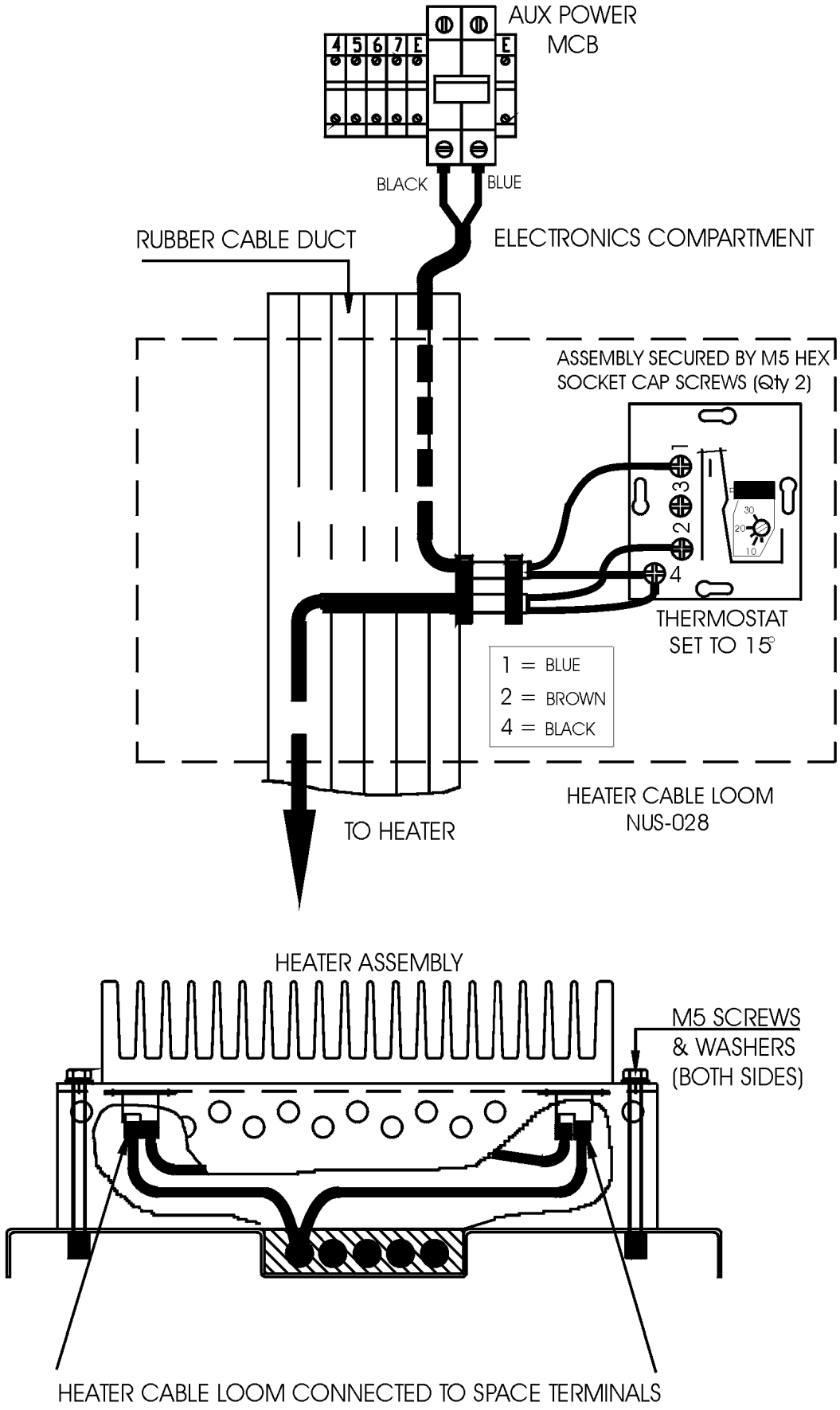

Figure 44: Control cubicle - Heater/thermostat connection

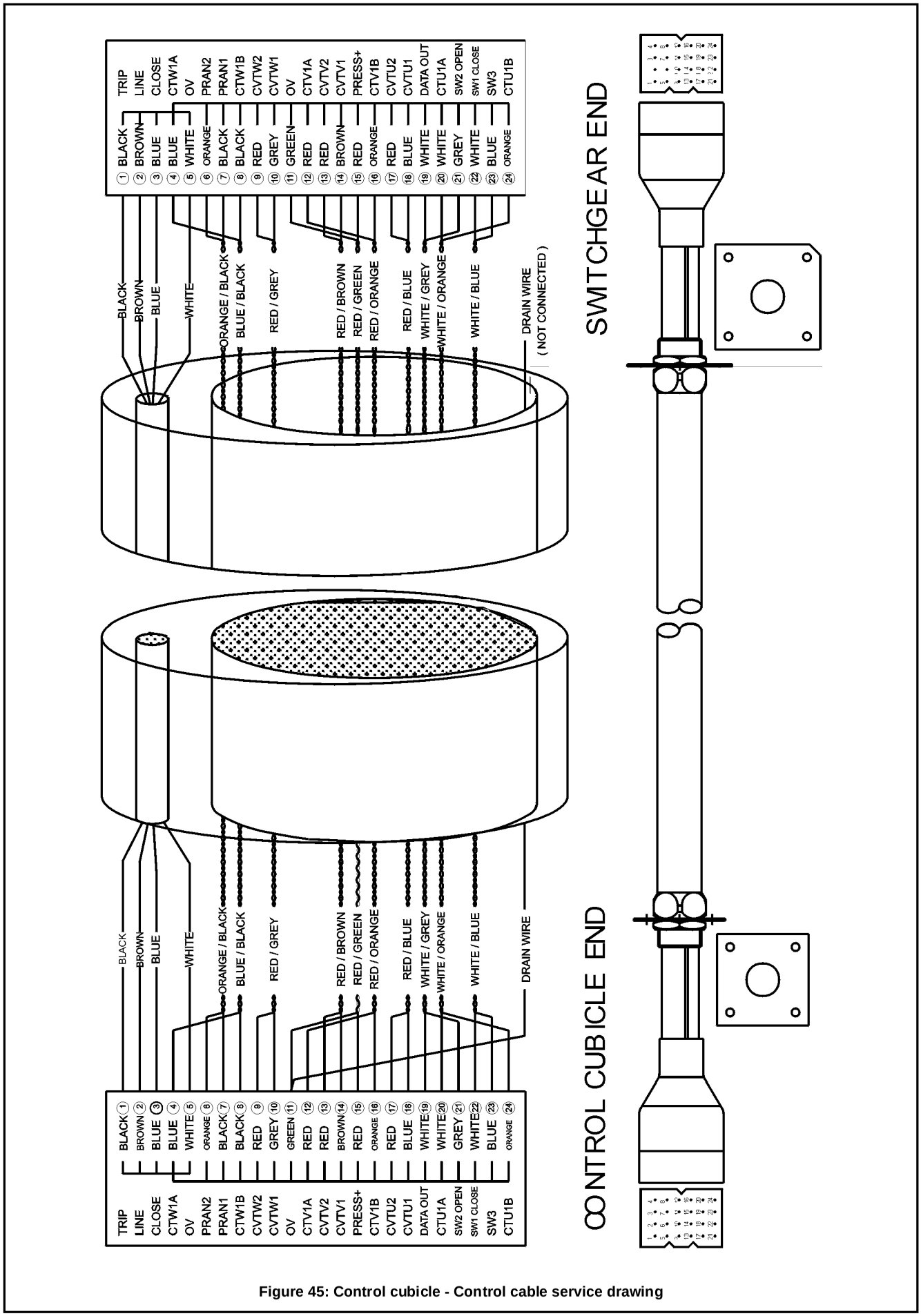

Figure 45: Control cubicle - Control cable service drawing

Appendix J Dimensions

Circuit Breaker

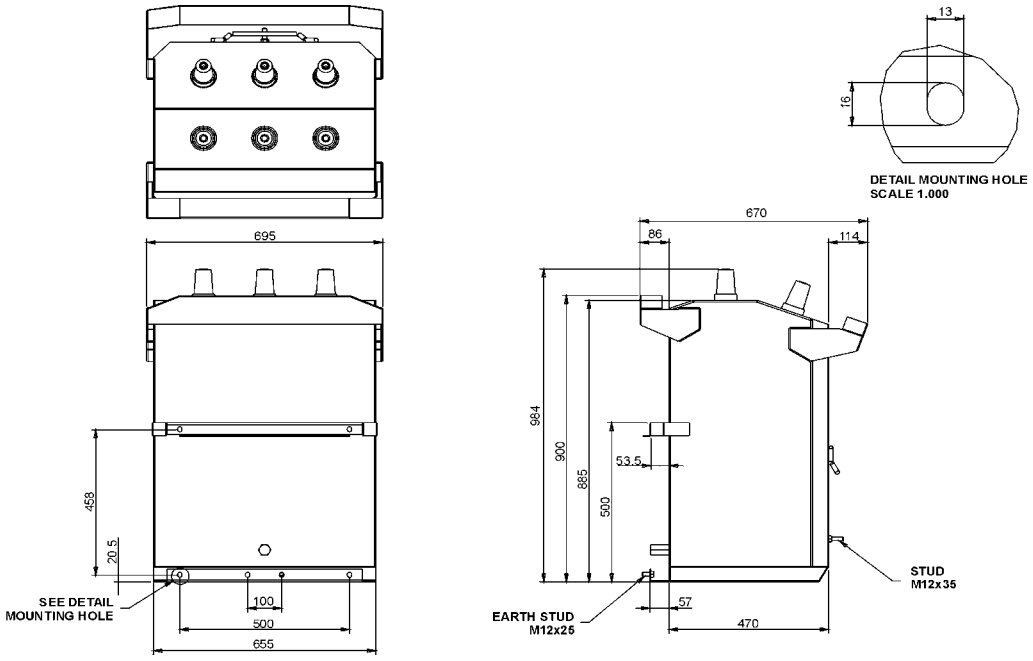

Figure 46: Circuit Breaker Dimensions

N15/N27 Pole Mounting Bracket

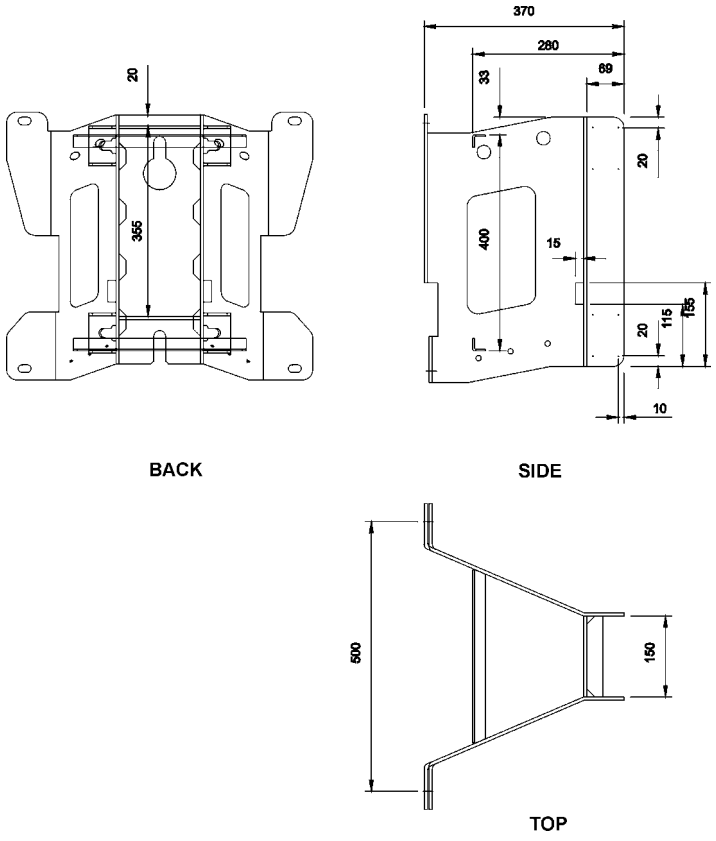

Figure 47: N15/24 Pole Mount Bracket

N38 Pole Mounting Bracket

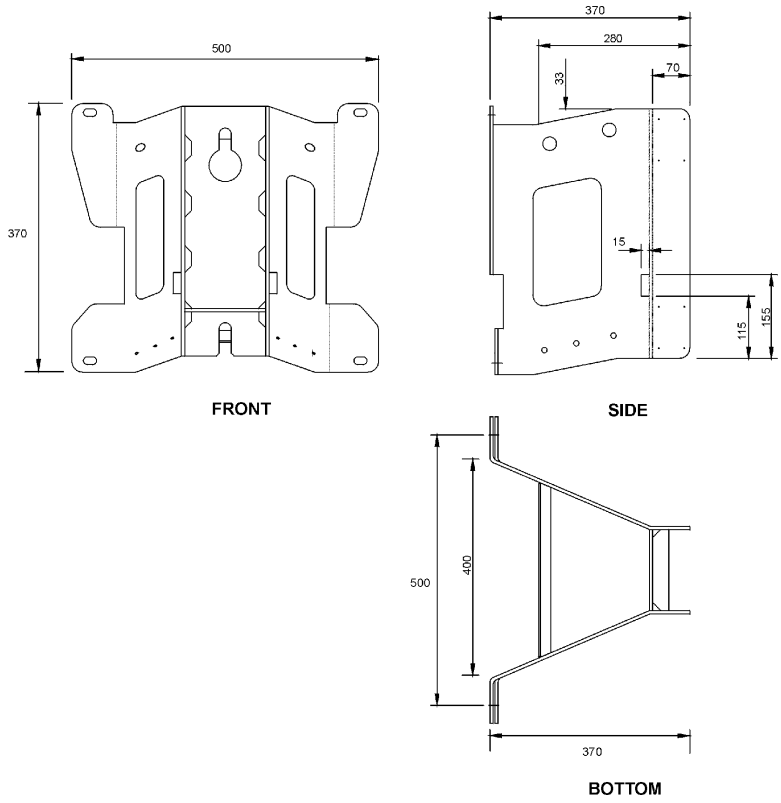

Figure 48: N38 Pole Mount Bracket

Adjustable Substation Mounting Bracket

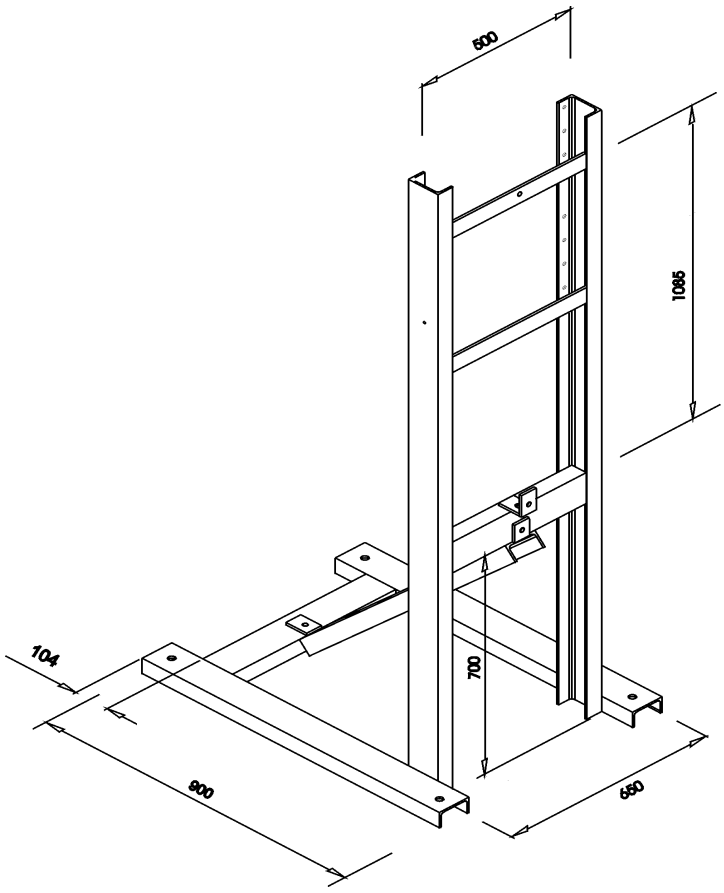

Figure 49: Adjustable Substation mounting bracket

Radio Tray Mounting Space

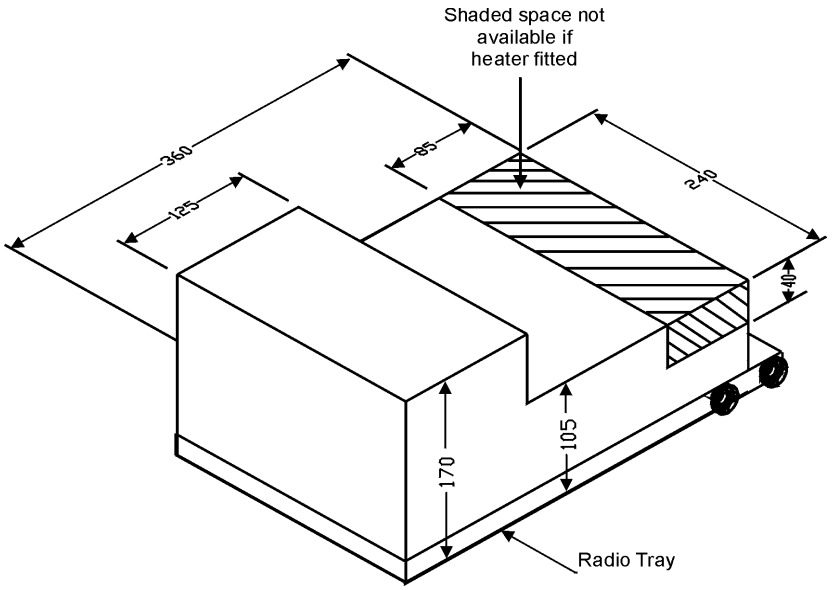

Figure 50: Radio mounting space

PTCC

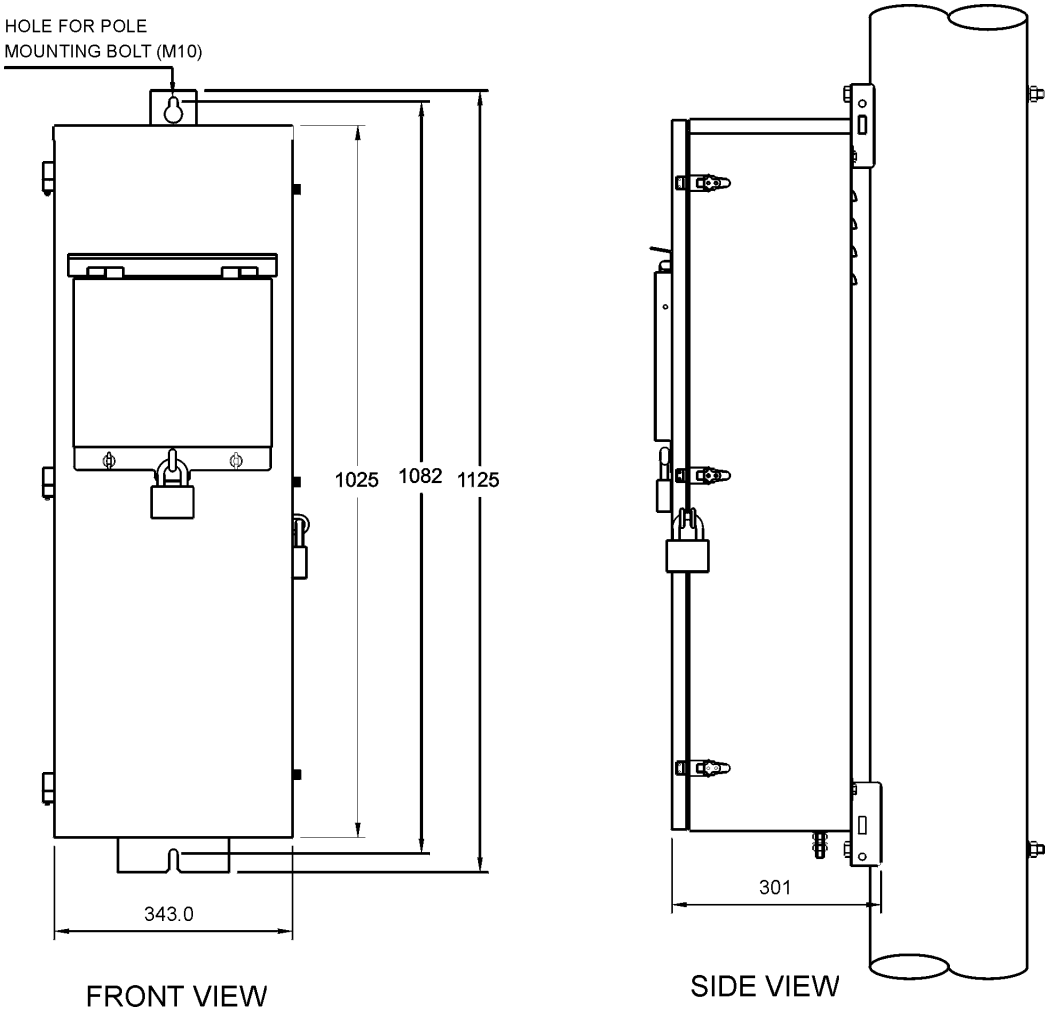

Figure 51: PTCC

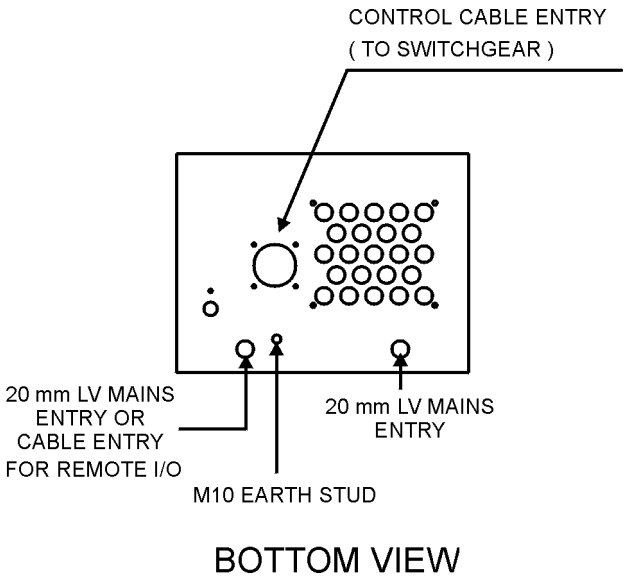

Figure 52: PTCC bottom view

Appendix K Silicone Grease Hazard Data

Silicone grease type LUB058044 is supplied by the manufacturer for filling the bushing boot cavities. This product is supplied to the manufacturer as Gensil Paste 12.

The following is reproduced from the original document provided by Rhodia Silicones, Australia.

Release date of original document: June 1998.

MATERIAL SAFETY DATA SHEET GENSIL PASTE 12 INFOSAFE No: 2RH7J

COMPANY DETAILS	
Company Name	Rhodia Silicones Australia Pty Ltd (CAN 32004693038)
Address	352 Ferntree Gully Road, NOTTINGHILL 3168, Australia
Emergency Phone (Aust)	1800 033 111
Tel / Fax	Ph: +6103 9541 1000 Fax: +6103 9587 5989
IDENTIFICATION	
Product Code	GS 12
Product Name	GENSIL PASTE 12
Proper Shipping Name	None Allocated
Other Names	None listed
UN Number	None Allocated
DG Class	None Allocated
Packing Group	None Allocated
Hazchem Code	None Allocated
Poisons Schedule	Not Scheduled
Product Use	Silicone Grease
PHYSICAL DATA	
Appearance	Translucent, light grey paste
Specific Gravity	1 (Water = 1)
Flash Point	> 200ºC
Flammable Limit LEL	Non-flammable
Solubility in water	Insoluble
OTHER PROPERTIES	
pH Value	Neutral
Solubility in Organic Solvents	Dispersible in aromatic and chlorinated hydrocarbon solvents
Odour	None
Form	Liquid
Decomposition Temperature	> 300ºC
Stability	Stable under normal conditions of use and storage
Hazardous Polymerization	Will not occur
INGREDIENTS	
Information on composition	Dimethylpolysiloxane based compound with inert fillers
HEALTH EFFECTS	
Acute - Swallowed	Will not generally cause irritation to mouth, throat and stomach.
Acute - Eye	Considered to be non-irritant.
Acute - Skin	Considered to be non-irritant.

Acute - Inhaled	Extremely low volatility. Not considered to be hazardous.
Chronic	No chronic effects have been observed under normal conditions of use and handling. To our knowledge there have been no reports in the literature of health effects in workers arising from long term exposure to this substance.
FIRST AID	
Swallowed	Give water or milk to drink.
Eye	Irrigate with copious quantity of water for 15 minutes.
Skin	Wash with plenty of soap and water.
Inhaled	No significant risk of inhalation.
First Aid Facilities	Eye wash fountain.
ADVICE TO DOCTOR	
Advice to Doctor	All treatments should be based on observed signs and symptoms of distress of the patient. Consideration should be given to the possibility that over-exposure to materials other than this may have occurred. Treat symptomatically. No specific antidote available.
PRECAUTIONS FOR USE	
Exposure Limits	See below.
Other Exposure Information	No exposure limit assigned to this substance.
Engineering Controls	No special ventilation required.
PERSONAL PROTECTION	
Protective Equipment	General safe work practice provides adequate protection.
Work/Hygienic Practices	Personal hygiene is an important work practice exposure control measure and the following general measures should be undertaken when working with or handling this material: (1) Do not store, use and/or consume foods, beverages, tobacco products or cosmetics in areas where this material is stored (2) Wash hands and face carefully before eating, drinking, using tobacco, applying cosmetics or using toilets. (3) Wash exposed skin promptly to remove accidental splashes of contact with this material.
FLAMMABILITY	
Fire Hazards	Non-flammable. Combustible. Will burn if involved in a fire but not considered to be a significant fire risk. The main combustion products are silica, carbon dioxide and carbon monoxide.
Other Precautions	Safe working practice and good hygiene should be observed.
STORAGE and TRANSPORT	
Storage Precautions	No special conditions apply. Avoid spillage.
Other Storage Information	General safe working practice should be adequate.
Proper Shipping Name	None allocated.
SPILLS and DISPOSAL	
Spills and Disposal	Presents slipping hazard on floors. Wipe or soak up in inert material for disposal. Wash walking surfaces with detergent and water.
FIRE / EXPLOSION HAZARD	

Fire / Explosion Hazard	Low hazard.Non-flammable liquid. Forms essentially amorphous silica, carbon dioxide and carbon monoxide on combustion. Fire can be extinguished by carbon dioxide, powder or a water type extinguisher.
Hazardous Reaction	The product is considered stable under normal handling conditions. Reaction with strong alkalies at temperatures above 120ºC will form flammable, volatile siloxanes.
Hazchem Code	None allocated
OTHER INFORMATION	
Toxicology	Not considered to be toxic under normal conditions of use and handling. No exposure standards are allocated to this substance.
Environmental Protection	Non-biodegradable. No negative ecological effects are known.
Packaging and Labelling	Keep in original container, ensure product name and code is marked on the container.
Regulatory Information	All ingredients are listed in the Australian Inventory of Chemical Substances.
Technical Data	A Technical Data Sheet for this product is available upon request.
References	(1) Australian Health Ministers Advisory Council,"Standard for the uniform scheduling of drugs and poisons"No: 11. AGPS, Canberra 1196. (2) National Occupational Health and Safety Commission,"National Code of Practice for the Preparation of Material Safety Data Sheets"(NOHSC:2011-1994) AGPS, Canberra 1994. (3) National Occupational Health and Safety Commission,"List of Designated Hazardous Substances"(NOHSC:10005-1994) AGPS, Canberra 1994. (4) National Occupational Health and Safety Commission,"Exposure Standards for Atmospheric Contaminants in the Occupational Environment", NOHSC:1003-1995) AGPS, Canberra 1995. (5) National Occupational Health and Safety Commission,"Approved Criteria for Classifying Hazardous Substances"(NOHSC:1008-1994) AGPS, Canberra 1994. (6) Commonwealth of Australia,"Australian Code for the Transport of Dangerous Goods by Road and Rail", 6th Edition, AGPS, Canberra, 1998 (7) Rhodia internal data.
CONTACT POINT	
Contact	Business Manager, Rhodia Silicones Australia.

Further Advice to the User:

This material safety data sheet should be used in conjunction with the technical data sheets. It does not replace them. The information given is based on our knowledge of the health and safety data of this product at the time of publication. It is given in good faith. The attention of the user is drawn to the possible risks incurred by using the product for any purpose other than that for which it was intended. If clarification or further information is required to enable appropriate risk assessment, the user should contact Rhodia Silicones Australia. Our responsibility for products sold is subject to our standard terms and conditions sent to customers. No liability whatsoever can be accepted with regard to the handling, processing or use of the product concerned which, in all cases, shall be in accordance with the appropriate regulations and/ or legislation.

INDEX

A

Abnormal operating conditions 106
ACR
  Closed 135
  Opened 135
and 79
Auto Reclose 52
Auto Reclose ON/OFF 40, 122
Automatic Protection Group selection 57
Automatic Reclose 135
Aux supply 122
  Fail 135
  Normal 135
  OK 87
Auxiliary power
  Control cubicle options 22
  From integral transformer 96
  From mains 96
  Source 22
Averaged Data displays 71

B

Battery 106, 135, 139
  Care 104
  Replacement 104
  Supply OK 87
Battery loom–Control cubicle 142
Bushing boot 94, 139
  Clamping ring 139
  Clamping ring spanner 93, 139
  Installation tool 139

C

Cable entry 22
Cable Tail
  Connections 94
  Kit 139
Cables
  Personalised 81
  Replacement 106
Capability 124
  Declaration 4
Capacitor charging inverter 106
Capacitors 25
CAPM 4 and CAPM 5 25
CAPM Electronics OK 87
CCEM 25
Changing
  Protection settings 42
Characteristic angle 59
Check
  Circuit breaker 105
  Control cable 105
  Control cubicle 105
Circuit breaker
  Check 105
  Maintenance 103
  SF_6 Recharging 103
  solenoids 25
Clamping ring spanner–bushing boot 93, 139
Clamping ring–bushing boot 94, 139
Cleaning 103
Close Blocking
  OFF 135
  ON 135
Close Coil
  Connect 135
  Isolate 135, 138
Cold Load
  Multiplier 55
  OFF 128
  ON 128
  Pickup 55
  Protection 54
  Quick Key 56
  Time 55, 128
Communications
  External 81
  Interfaces 81
  WSOS Port P8 124
Computer port 23
Configurable Baud Rate 82
Configurable IOEX 87
Configurable Quick Keys 31
Configuration number 3
Configuring Average Demand 71
Connections into electronics compartment 83
Construction and operation 17
Contact life 18, 138
  Greater than 20% on all phases 87
Contents of crate 91
Control and protection module
  (CAPM 4) 139
  (CAPM) 106
Control cable 91, 139
  Check 105
  Connection 91
  Entry module 25
  Service drawing 150
Control cable entry module (CCEM) 106
Control cubicle 139, 141
  Battery loom 142
  Check 105
  Cleaning 103
  Construction 21
  Control cable service drawing 150
  Dual LV aux power 147, 148
  Heater 139
  Heater/thermostat connection 149
  Integrated plus LV aux power supply 146
  Main loom connection 143
  Maintenance 103
  Schematics 141
  Single integrated aux power supply 144
  Single LV aux power supply 145
Control cubicle entry module (CCEM) 139
Controller
  Mode 35
  Version 3
CT 69
Current injection point 23
Currents in each phase averaged over the period 71
CVT 69

D
Date and time of the end of the averaging period . 71
Dead Lockout 54
Definite Time 43
Definite Time protection 49
Definition of Local / Remote user 35
Denied Wrong Mode 135
Detection
  Generated Events 67
Directional blocking 59, 128
  Status 62
Disconnected 135
Display groups 31
Display Page Organisation 33
Dual LV aux power 147, 148
E
E/F OFF Allowed/Not Allowed 42, 124
Earth connections 93
Earth fault 40
  Control 42
Earth prot
  Trip 135
Earth protection trip number 1,2,3,4 (A–J) . 130, 131
Earth Residual Voltage Balancing 61
Earth/SEF Directional protection 60
Earthing 96
Electronics compartment 83
Equipment panel 21
Equipment versions covered by this manual 3
Event
  Log 67
Events 136
Excess Close Operations 106
External communications 81
Extremely Inverse 107, 109
F
Fail to Operate Under Protection 58
Fast Trip Input Module 90
Fault
  Finding 104
  Flags 39
  Regions 59
Fault flags
  Resetting 40
Feed-through or bulkhead type arrester 95
Ferrite filters 95, 139
Fitting or replacing heater 106
Forward Fault 59
Frequency
  Protection 49
G
Gas
  Pressure monitoring 17
  Pressure normal 87
Gas discharge surge arrester 95
Gas fill adaptor 103, 139
Gas Low
  Alarm 103
  Lockout 124
Generator Control 79, 136
  Configuration 79
  Operation 79
Group A–J 42
Group Copy 43
H
Heater 106
Heater/thermostat connection 149
Heater–fitting or replacing 106
High Current Lockout 53, 128, 135
High Voltage connections 93
Hit and Run 35
HV Line supply 22
I
IEC255
  Curves 46
  Inverse Time Protection tables 107
IEEE
  Inverse Time Protection tables 109
  Std C37.112 curves 46
Inactive group 43
Input Output Expander (IOEX) Card 85
Inputs 86
Inrush
  Current 54
  Multiplier 55
  ON/OFF 128
  Restraint 54
  Time 128
Installation 91
Instantaneous 47
  Multiplier 45
  Only 130, 131
  Protection 48
  Trip 45
Integrated
  Auxiliary supply 96
  HV supply 22
Integrated plus LV aux power supply 146
Interactions between curve parameters 47
Inverse 107
Inverse Time 44
Inverse Time protection 44
Inverse Time protection curves 44, 111
IOEX
  Cabling 95
  Card 85
  Status 125
L
Liquid Crystal Display 30
Live Load blocking 52, 127, 136
Live Terminal Threshold 52
Live/Dead indication 70, 123
Load Supply OFF/ON 136
Local
  Control 9
  Mode 35, 86
Local/Remote
  Control 40
  Mode 35
Lockout 53, 122, 136
Loop Automation 77
LOP 49
Loss of Diversity 55
Loss of Phase protection 49, 136

INDEX

Loss of Supply
Events 67
Low Gas Lockout 53
Low Power mode 106
LV
Mains cable 93
Supplies 22
Surge arrester 96
LV auxiliary supply
Connection 96
From dedicated utility transformer 96

M

Main earth bond 96
Main loom connection 143
Maintenance 103
Manual Operation Set 90, 139
Manual trip 53
Maximum Time 45, 47
Mechanical Close 136
Mechanical trip 53, 136
Mechanism OK. 87
Menu key 30
Minimum Time 45
Moderate version 21
Moderately Inverse 109
Monthly Maximum 70
Mounting and earthing 22
Mounting brackets 95
Multiple groups of protection settings 42

N

Negative Phase Sequence Protection 41
Non-standard curves 46
Non-standard Inverse Time protection curves 111
Normal Frequency 50
Normal Power mode 136
Nuisance tripping 59

O

Operational Cold Load Multiplier 55
Operational Cold Load Time 55
Operator Control Panel 29
Operator Panel subsystem 25, 139
Operator settings 40, 122
Optically isolated input contacts 85
Outputs 87
Over Frequency trip 50
Overcurrent protection 43

P

P8 82
Panel ON/OFF 29, 30
Parts and tools 139
Parts required 93
Password protection 32
Peak averaging period 70, 71
Personalised cables 81
Phase
Directional protection 59
Prot Trip 137
Prot trip number 1,2,3,4 (A–J) 129, 130
Rotation 137
Threshold Multiplier 46
Voltage 123
Pickup 43, 137
Position indicator 17
Power Down 137
Power Factor (PF) 70, 71
Power Flow direction 57, 69, 123
Power System measurements 69
Power Up 137
Power Up sequence 25
Press to Talk (PTT) 81
Primary injection testing 104
Prot group
A–J Active 137
Prot OFF control 124
Protection 39
Auto 57
Curves 46
Elements 39, 137
Groups 42
Of radio equipment 95
OFF 137
ON 137
Options 124
Pages 127
Setting 1 (A–J) 127
Setting 2 (A– J) 127
Setting 3 (A–J) 127
Setting 4 (A–J) 128
Setting 5 (A–J) 128
Trip Counter 52
Protection and Operation check 104
Protection settings 43
Protocol Reset 137

Q

Quick Key Selection 32

R

Radio and IOEX 123
Radio cable 139
Radio holdup time 83
Radio/Modem
Power 83, 123, 137
Real Power (kW) 70, 71
Real Time Displays 70
Reclose Time 52
Recloser earthing 96
Related documents 4
Remote
Control Panel 90
Mode 35
Operator control 81
Terminal unit 1
Remote Control ON 122
Remote Panel 35
Replacement of cables 106
Replacement of electronic modules 106
Resetting
Fault flags 40
Trip flags 40
Residual Voltage 61

Reverse Fault 59
RS232 interface 81, 82
S
Safety Advice 4, 17
SAIDI 73
SAIFI 73
SCEM Data 87
Sealing and condensation 21
Secondary Injection Test Set 89
SEF 49, 124
  Counter 57
  Prot trip 138
  Residual Voltage Indication 61
Select key 30
Selecting displays 30
Selection rules 58
Sensitive earth fault 40
  Control 41
  Protection 43
Sequence
  Advance 138
  Control 127
  Coordination 57
  Reset 53, 138
Setting current 43, 44
SF_6 ..... 103, 122
  Gas cylinder 139
  Pressure 138
  Recharging 103
Silicone grease 94
Silicone grease MSDS 155
Single integrated aux power supply 144
Single LV aux power supply 145
Single Shot 138
  Active 122
  Mode 54
Site installation 93
Site procedure 93
Software
  Capability 3, 4
  Identification 3
  Version 3, 4
Source Supply OFF/ON 138
Standard Event Types 135
Startup message 30
Supply Outages 73
  Display 134
  Measurement 73
Supply Timeout 123
Surge arresters 95
  LV 96
  Mounting and terminating 94
Switchgear
  Cable Entry 139
  Status 122
  Terminal Designation 69, 123
  Type and ratings 123
  Wear/general details 124
System
  Average Interruption Duration Index 73
  Average Interruption Frequency Index 73
  Healthy indicator 87
  Status displays 31
  Status pages 121
T
Temperate version 21
Test and Training Set 89, 104, 139
Testing & configuring 92
Threshold Current 47
Threshold Current Multiplier 43, 48, 55
Time Multiplier 130, 131
Time to Trip 44
Tools required 93
Transformer switching 97
Transport to site 92
Trip Coil
  Connect 138
  Isolate 135, 138
Trip flags 39
  Resetting 40
Tropical version 21
U
Under / Over Frequency display 129
Under/Over Frequency Protection(CAPM5) 49
Unpacking & checking 91
Updating the Event Log 67
User Defined curves 46
V
V23 FSK modem 81
V23 interface 81
Vacuum Interrupter 1, 18, 138
Version 28 Features 1
Very Inverse 107, 109
Voltage free output contacts 85
Voltage on line side terminals 70
W
Weekly Maximum 71
Windows Switchgear Operating System (WSOS) 67, 89, ... 139
Work Tag 35, 86, 122, 138
WSOS Port P8 communications 124

Schneider Electric Industries SA

Nu-Lec Industries
35-37 South Street
Lytton, 4178
Queensland
Australia

Tel: +61 7 3249 5444
Fax: +61 7 3249 5888

e-mail: sales@nulec.com.au
http://www.nulec.com.au

As standards, specifications and designs change from time to time, please ask for confirmation of the information given in this publication.

21 Mar 2003

NSR01-1029

Instructions for Types ES and ESM Power Reclosers

Westinghouse Electric Corporation

Distribution Apparatus Division, Bloomington, Indiana 47401
I.B. 38-721-3, Effective July 1975

TABLE OF CONTENTS

Page

INTRODUCTION 5

RECEIVING, HANDLING, AND STORAGE

Receiving Inspection 5
Handling 5
Storage 5

GENERAL DESCRIPTION

Mounting 5
Oil-Filled Tank 5
Oil Level 5
Tank Removal 6
Top Casting 6
Lifting Flanges 6
Porcelain Bushings 6
Bushing Current Transformers (BCT) 6
Current Interrupter 6
Mechanism Compartment 7
Auxiliary Switch Assembly 7
Operation Counter and Position Indicator 7
Nameplate 7
Control Cabinet 7
Relay Components 7
Static Components 7
Reclosing Relay 7
Heaters 7
Terminal Blocks 7

STANDARD PRODUCTION TESTS 8

DESCRIPTION OF OPERATION

Motor Driven Operation of Charging the Closing Springs 8
Manual Operation of Charging the Closing Springs 9
Closing the Recloser 9
Latch Check Switch 9
Opening the Recloser 9
Trip Free Operation 10

OPERATIONAL CHECK PRIOR TO INSTALLATION

Operational Check—Manual 10
Operational Check—Electrical 10
Electrical Close 10
Electrical Trip 10

PERMANENT INSTALLATION

Recloser Mounting 10
Line Connections 11
Control Connections and Wiring 11

FINAL INSPECTION

Mechanical and Electrical Inspection 11
Insulating Oil Inspection 11

INSPECTION, MAINTENANCE, AND ADJUSTMENT

Periodic Inspection 11
Lowering the Oil Tank—ES Recloser 12
Lowering the Oil Tank—ESM Recloser 12
Replacement of Bushings 12

Table of Contents (Cont'd.)

Stationary Contact Measurement and Adjustment, Type ES Recloser 13
Stationary Contact Measurement and Adjustment, Type ESM Recloser 14

STANDARD OPERATING DUTY 14

RENEWAL PARTS 14

Note: In the interest of clarity, a single set of identification numbers is used throughout this book, with a particular number referring to the same component, or device, in every relevant figure or diagram.

To avoid confusion, any circuit component or device having a function or purpose as defined in ANSI C37.2 has a second identification in accordance with this standard. For example, the spring release device is identified as (8) as well as *IEEE Device 52/CC*.

LIST OF ILLUSTRATIONS

Figure	Title	Page
1	Type ES/ESM Power Recloser in Substation Frame	15
2	Head Casting, High Voltage Bushings, and Interrupters	15
3	Head Casting, with Interrupters, Shaft, Moving Contacts, and BCT's	15
4	Typical Bushing Current Transformer Nameplate	15
5	Interrupter Grid Assembly (Earlier Design)	16
6	Interrupter Grid Assembly (Later Design)	16
7	Interrupter Grid Assembly—Internal Details (Earlier and Later Designs)	17
8	Mechanism Details, Cover Removed, Front View	17
9	Mechanism Details, Top View	18
10	Auxiliary Switch, Details and Ratings	18
11	Typical Recloser Nameplate	19
12	Typical Control Cabinet Panel—Relay-Controlled Recloser	19
13	Typical Control Cabinet Panel—Static-Controlled Recloser	19
14	Interior of Control Cabinet—Static-Controlled Recloser	20
15	Bottom View of Mechanism Compartment, Showing Access Opening, Manual Trip Extension, and Manual Reset Knob	20
16	Relation of Mechanism, Linkages, and Interrupter Assembly	21
17	General Arrangement of Principal Parts of Mechanism	22
18	Front View of Principal Parts of Crankshaft Assembly	23
19	Details of Closing Springs	24
20	Details of Manual Charge Device	25
21	Details of Crankshaft Assembly	26
22	Operation of Manually Charging the Closing Springs	26
23	Details of Close Interlock	27
24	Details of Linkages of Mechanism and Closing Spring Charge Condition	28
25	Latch Check Switch (*IEEE Device 52/LC*)	29
26	Typical Schematic Diagram—Relay-Controlled Recloser	29
27	Typical Schematic Diagram—Static-Controlled Recloser	30
28	Tank Lifter Windlass and Mounting Details—Type ES Recloser	30
29	Tank Lifter Windlass and Mounting Details—Type ESM Recloser	30

INTRODUCTION

These instructions cover the description, installation, operation, and maintenance of Westinghouse Type ES Automatic Oil Circuit Recloser. The Westinghouse Type ES Automatic Circuit Recloser (Figure 1) is a heavy duty, three-phase fault protector for distribution substations and main feeder lines. The unit is designed to sense overload conditions and automatically open simultaneously all three phases, then reclose the circuit to which it is connected after an adjustable time delay. If the overload conditions still exist, the unit will again automatically open and then reclose the circuit. It will cycle as many as four times before it automatically locks open for a serviceman to determine the cause of the fault and repair it. The unit may be operated electrically from a remote position or manually. A counter in the recloser provides a convenient record for service and maintenance purposes.

This recloser should be installed within the design limitations as described on its nameplate and in these instructions.

Satisfactory performance of this recloser is contingent upon correct installation and adequate maintenance and servicing. Careful study of these instructions will permit the user to obtain the maximum benefits from this device.

RECEIVING, HANDLING, AND STORAGE

Each recloser is completely assembled and tested at the factory prior to being prepared for shipment.

This equipment was packed and shipped in perfect condition. If damage is noted, call the carrier at once for inspection, and request an inspection report. File formal claim with the carrier, supported with paid freight bill, inspection report, and invoice. The local Westinghouse Sales Office should be notified.

Receiving Inspection

Upon receipt, it is important to inspect promptly to be certain that the correct material has been received. In case of shortage, immediately notify the local Sales Office of the Westinghouse Electric Corporation.

Check all parts against the shipping list as they are unpacked. Instructions and literature packed with the recloser should be kept with the unit. The low voltage compartment provides a convenient place to keep this instruction book, a copy of the schematic diagram, and the card carrying the service record of the unit. Additional copies may be obtained upon request from the local Sales Office.

If the recloser is not to be placed in service immediately, it is essential that proper care be exercised in the handling and storage, to insure good operating conditions in the future.

Handling

CAUTION

LIFT COMPLETE RECLOSER USING FOUR-CHAIN HOIST. HOOKS SHOULD ENGAGE FOUR BARS OR PINS NO LESS THAN 3/4 inch (19mm) DIAMETER, INSERTED INTO THE FOUR PAIRS OF FLANGES ON THE ENDS OF THE HEAD CASTING. DO NOT LIFT BY THE BUSHINGS OR TERMINAL CONNECTORS.

Storage

Unless otherwise specified, the recloser is shipped complete with oil, and may be stored as received, in an indoor or outdoor location. If stored outdoors or in a location of high humidity, the head casting gasket should be inspected for integrity. After prolonged storage, it is possible to withdraw a sample of the oil for dielectric testing.

The mechanism compartment and control cabinet have heaters which should be energized during storage to maintain insulating members free of condensation.

GENERAL DESCRIPTION

The ES (and ESM) Recloser is comprised of three elements: (1) an oil-filled tank; (2) a head casting, supporting the interrupters, bushings, bushing current transformers (as specified), and operating mechanism (in a weatherproof cabinet outside the oil tank); (3) a control cabinet.

Mounting

To support the ES recloser, four bolts hold the top casting to the mounting frame. The ESM recloser is supported in the mounting frame by the oil tank, to remove the high current interruption shock strain from the top casting. The mounting brackets are attached to the oil tank channel and the mounting frame.

Oil Filled Tank

The oil filled tank (capacity 46 gallons [174 litres] of Wemco "C" oil) is attached to the top casting and sealed with a cork neoprene gasket. It houses the interrupters and bushing-mounted current transformers. Each interrupter is in a separate compartment made from an arc-resistant, moisture-resistant, high dielectric strength material, which confines the interrupting gases to a single phase. Each of these three compartments includes a surge cushion to minimize shock duty on the control components and accessories during high fault current interruption. A relief vent permits arc gases to escape from the high voltage compartments and avoid pressure build-up.

Oil Level

The level of the Wemco "C" oil can be conveniently checked by the optional visual oil indicator mounted in the rear of the tank wall. If the tank is lowered,

the oil level may be determined by observing residual marks on the tank liner. Oil may be drawn off for sampling by means of the 1/2" valve at the bottom of the tank wall; it may also be drained completely by removing the plug at the same location.

Tank Removal

The optional windlass makes tank removal more convenient; if not present, other means for supporting the oil-filled tank weighing approximately 650 lbs. (295 kg) should be provided.

Detailed instructions for lowering the oil tank, for inspection or replacement of interrupting elements, will be found in the Inspection, Maintenance, and Adjustment section of this Instruction Book.

Top Casting

The top casting supports the interrupters, bushing-mounted current transformers, and the operating mechanism. (Figure 2) The interrupters and transformers are located in the oil tank, while the operating mechansim is housed in an independent weatherproof cabinet.

Lifting Flanges

CAUTION

LIFT COMPLETE RECLOSER USING FOUR-CHAIN HOIST. HOOKS SHOULD ENGAGE FOUR BARS OR PINS NO LESS THAN 3/4 inch (19mm) DIAMETER, INSERTED INTO THE FOUR PAIRS OF FLANGES ON THE ENDS OF THE HEAD CASTING. DO NOT LIFT BY THE BUSHINGS OR TERMINAL CONNECTORS.

Porcelain Bushings

The Type ES Recloser is equipped with high-strength, 15 kV, porcelain bushings. A wide selection of terminals permits horizontal or vertical connections to conductors from No. 2 to 800 MCM in size. Bushings are replaceable, as described in the Inspection, Maintenance, and Adjustment section of this Instruction Book.

Bushing Current Transformers (BCT)

Three 600:5 or 1200:5 multi-ratio bushing type current transformers (one for each phase) are supplied with each recloser. (Three additional current transformers may be supplied, when specified, for control or metering requirements, for a total of two per bushings No. 1, 3, and 5.) The secondary leads are brought through an oil-proof opening to the mechanism compartment, and connected to terminal blocks, equipped with shorting screws. (See Figure 3)

CAUTION

CURRENT TRANSFORMERS ARE SHORTED OUT AT THE TERMINAL BLOCKS PRIOR TO SHIPMENT. THESE SCREWS MUST BE REMOVED WHEN CONNECTING CURRENT TRANSFORMERS TO INSTRUMENTS, METERS OR CONTROL DEVICES.

Refer to wiring diagram or nameplates for specific information on BCT's on Recloser. (Figure 4 illustrates a typical BCT nameplate.)

Table I identifies terminal markings, ratios, and d-c resistance for standard 600:5 and 1200:5 BCT's.

TABLE I

Terminal	Ratio	Ohms @ 25°C
X2-X3	50-5	.015
X1-X2	100-5	.029
X1-X3	150-5	.044
X4-X5	200-5	.058
X3-X4	250-5	.073
X2-X4	300-5	.088
X1-X4	400-5	.117
X3-X5	450-5	.131
X2-X5	500-5	.146
X1-X5	600-5	.175
Terminal	**Ratio**	**Ohms @ 25°C**
X2-X3	100-5	.052
X1-X2	200-5	.104
X1-X3	300-5	.156
X4-X5	400-5	.208
X3-X4	500-5	.260
X2-X4	600-5	.312
X1-X4	800-5	.416
X3-X5	900-5	.468
X2-X5	1000-5	.520
X1-X5	1200-5	.624

Thermal rating is 90 times rated current for one second; mechanical, momentary rating is 180 times rated current.

Current Interrupter

The Type ES (and ESM) Recloser has three heavy grid plate interrupters using the basic Westinghouse De-Ion design (Figures 5, 6, and 7). Each interrupter is an assembly of vulcanized fibre plates, contained between brass castings or steel plates, held in compression with insulated tie rods.

Each moving contact is a copper rod, having high-conductivity, long-life silver-tungsten contact tips brazed to the lower end, and fitted at its upper end with an insulated Micarta lift rod assembly. Each stationary contact assembly is a self-aligning nest of spring-biased tulip contacts.

The current path from each rear bushing (No. 2, 4, or 6) is as follows: from bushing terminal through bushing to top of interrupter assembly, to parallel guide posts, through spring-loaded current-carrying rollers, which transfer current to the moving contact (mentioned in the preceding paragraph), to stationary

contact (tulip assembly), to flexible shunt, to bottom of front bushing (No. 1, 3, or 5), and to bushing terminal.

As the moving contact rod is withdrawn from the stationary contact assembly, the arc energy begins to vaporize some of the oil in the lower well surrounding the stationary contacts. As the moving contact retreats past the first vent, gas pressure generated in the lower well exerts a blast effect which tends to blow the arc through the vent and extinguish it as the gases are expelled. Most circuit interruptions occur at this point in the operation. The moving contact continues to rise and should the arc persist, a second radial flow serves to extinguish the arc at the top vent. If, under unusual circumstances, the arcing continues until the moving contact has completed its full travel, the oil in the top well vaporizes and expands. This causes a longitudinal flow down the length of the arc and out the vents provided. The biased seal is designed to permit a flow of fresh oil into the interrupter.

Mechanism Compartment (See Figure 8)

All mechanism components are housed in the upper compartment, attached to the head casting. The cover is gasketed for weather protection, and can be removed for inspection, operation, service, etc.

Auxiliary Switch Assembly

The auxiliary switch assembly is mounted in the mechanism compartment, above the mechanism, to the right of the opening spring. (See Figure 9 and Figure 10.) The mechanically-driven rotary type switches each has four sets of contacts, normally set for two "a" (open), and two "b" (closed). The standard recloser operation requires three "a" and three "b" contacts, leaving one extra "a" and one extra "b" for external use, as desired. One additional auxiliary switch can also be supplied on request, adjusted for any specified combination of "a" and "b" contacts. The contacts of these switches will carry 15 amperes continuously, or 250 amperes for three seconds.

Operation Counter and Position Indicator

The red and green targets of the position indicator are marked "CLOSE" and "OPEN" to show contact position. The manually-resettable operations counter is mounted below the indicator window.

Nameplate

A nameplate in the mechanism compartment provides recloser rating data, with style, and shop order number. (See Figure 11)

Control Cabinet

A hinged, weatherproof cabinet houses the low voltage control components. (See Figures 1, 12, 13, and 14.) Inside, a hinged panel allows access to the front and rear of the components; other devices are mounted on the back wall of the cabinet. Connections to the mechanism compartment are made through multiconductor cable.

For low voltage and remote control inputs to the control cabinet, the floor of the cabinet is equipped with a removable panel, which can be drilled or punched for cable entrance fittings, as desired. (See Figure 15)

Relay Components (See Figure 12)

On relay-controlled reclosers, the typical front panel mounts the overcurrent phase and ground relays, the reclosing relay, the control switch (*IEEE Device "CS"*) for electrically closing and tripping the recloser, the red and green indicating lights, the ground fault bypass switch, the non-reclosing (one shot to lockout) switch, and the control breaker. Additional devices, such as meters, instruments, and test switches, may be mounted on this panel.

A second panel, bolted to the back wall of the control cabinet mounts terminal strips, heaters, and resistors. Optional equipment, such as the capacitor trip device, remote control relay, and additional terminal strips are mounted on this panel.

Static Components (See Figure 13 and Figure 14)

On static-controlled reclosers, the typical front panel mounts the static control phase and ground units, the control switch (*IEEE Device "CS"*) for electrically closing and tripping the recloser, the red and green indicating lights, the ground trip bypass switch, the non-reclosing (one shot to lockout) switch, the lockout/test switch, sequence test push button, lockout indicating light, cold load pickup switch, and control breaker.

Reclosing Relay

Refer to I.L. 38-741-5 (RCS Relay), or to I.B. 38-721-4 (RCS II Relay), or to I.L. 38-741-6 (EMI Relay).

Heaters

Heaters are continuously energized to prevent the condensation of moisture inside the mechanism compartment and control cabinet. When specified, extra heaters, with thermostat control, are supplied. Consult pertinent connection or schematic diagram for the specific recloser.

Terminal Blocks

The terminal blocks in the mechanism compartment terminate the secondary leads from the bushing current transformers (BCT's).

CAUTION

CURRENT TRANSFORMERS ARE SHORTED OUT AT THE TERMINAL BLOCKS, PRIOR TO SHIPMENT. THESE SCREWS MUST BE REMOVED WHEN CONNECTING CURRENT

TRANSFORMERS TO INSTRUMENTS, METERS, OR CONTROL DEVICES.

The terminal blocks in the control cabinet provide means to connect BCT's, relays, and other control devices.

STANDARD PRODUCTION TESTS

Standard production tests include:

1. Verification of BCT's: style number, polarity, ratios, and connections.

2. Manual operation: close, trip, functioning of counter, and permissive control switch (*IEEE Device No. 69*).

3. Verification of all wiring, per pertinent connection diagrams.

4. Electrical operation:
   a. Close, trip, and latch check switch (*IEEE Device No. 52/LC*).
   b. Motor closing, closing device, and tripping device, per table below.

TABLE II

Operating Voltage Range

Control Voltage Rating	Closing Power Devices	Closing Control Devices	Tripping Devices
24V/DC	N/A	N/A	14-30V
48V/DC	N/A	N/A	28-60V
125V/DC	90-130V	90-130V	70-140V
250V/DC	180-260V	180-260V	140-280V
115V/AC	95-125V	95-125V	95-125V
250V/AC	190-250V	190-250V	190-250V

(Devices are checked at minimum and maximum values.)

   c. Measure of opening time of interrupter after rated voltage is applied to trip coil; maximum allowable time is .048 seconds (three cycles on 60-Hertz basis).

5. Check on functioning of all switches: control, non-reclosing, ground fault bypass, etc.

6. Contact resistance: average of three readings, made on each phase, must not exceed 350 microhms (0.00035 ohms). In addition, the values of each phase must be within 10% of each other. Measurements are normally made using a Biddle "Ductor." The above measurements are made on a complete recloser, with a full tank of insulating oil.

7. Voltage withstand: The complete recloser is tested (a) between live parts and tank, (b) across open contacts, and (c) between phases. A 50 kV, 60-Hz source is used. The recloser must withstand the applied voltage for one minute. The above tests are made on a complete recloser, with a full tank of insulating oil.

8. Wiring insulation: (a) the charging motor is isolated and given an overpotential test, of 900 volts, AC to ground; (b) the terminal block connections (with the motor leads disconnected) are given an overpotential test of 1500 volts, AC to ground; (c) the BCT terminals (with secondaries short-circuited) are given an overpotential test of 2500 volts, AC to ground, for one minute.

9. Contact travel: the design of the linkages results in a nominal travel of 4 inches (102 mm). The engagement between moving contact and the fixed "tulip" contact—the "contact wipe"—is adjusted to a minimum of 3/8 inch (10 mm).

DESCRIPTION OF OPERATION

(See Figures 16, 17, 18, 19, 20, and 21)

The following paragraphs describe the ES (and ESM) Recloser mechanism. The mechanism, of the stored energy type, consists of two parts:

(1) The stored energy, or spring charging mechanism, and (2) the closing and opening mechanism. The basic parts are combined into one sub-assembly. A universal type motor automatically charges the two closing springs. The closing operation serves to charge the opening spring.

The mechanism has a spring release device which can be actuated to close the recloser manually (locally), or can be electrically operated, through a control switch, or other circuit-making device, for remote closing.

The recloser can be opened manually (locally), or can be tripped electrically, through a remote control switch.

In the absence of control voltage (or whenever desirable), the closing springs can be charged manually, with the manual charging handle. (See Figure 22.)

Referring to Figures 17, 18, and 19, the basic elements are mounted on the crankshaft (15), which has four flats machined on it, and crankarms (17) attached to the ends. Each arm connects to its closing spring (18) by a formed end (38), while the rear of the spring is anchored to the mechanism frame. The crank arms (17), motor cutoff switch cam (25), close cam (5), and drive plates (12) have flats matching the crank shaft ends to anchor them to the shaft. The spring charge indicator (26), ratchet wheel (10), oscillator (14), and manual charge device (16) do not have matching flats but are mounted on separate bushings and are free to rotate on the crank shaft.

Motor-Driven Operation of Charging the Closing Springs

When power is applied to the motor, its roller (41) drives the oscillator (14) counterclockwise, and the oscillator pawl (9) pushes on a tooth in the ratchet wheel (10) to rotate the wheel slightly more than one tooth in the counterclockwise direction. The hold

pawl (11) snaps behind the corresponding advanced tooth, holding it against the torque of the closing springs (18), while the oscillator, driven by the oscillator spring (39), rotates back clockwise to catch another tooth on the ratchet. The counterclockwise rotation of the oscillator thus continues until the ratchet wheel pin (40) engages the two drive plates (12), and through them, the oscillator drives the crankshaft until its arms (17) are slightly past horizontal dead center. (This rotation of the shaft carries the close cam (5), keyed to it, around by the same angular amount, as well as the stop roller (6).) Just after horizontal dead center of the crank arms is reached, the torque applied by the closing springs starts to rotate the crank shaft further, independent of the driving motor/oscillator/pawl action. The stop roller on the close cam stops and holds the crank from further rotation just past horizontal dead center by coming to rest against the spring release latch (7). This is the "spring charged" position.

At the instant that the closing springs snap over dead center and are held there, the lobe of the left hand drive plate (12) raises the pawl lifter (35), thus preventing the oscillator pawl (9) from engaging the next tooth in the ratchet wheel (10). The oscillator is then free to move back and forth; at the same time, the motor cutoff switch cam (25) operates the switch (28) through a lever (27), and the motor stops. The cam (25) also operates the spring charge indicator. Since the oscillator is free-running, the exact point at which the motor stops is not critical.

Manual Operation of Charging the Closing Springs

When it is desired to charge the closing springs manually, the manual charge handle (23) must be used to rotate the charging device (16) on the shaft. Six to eight strokes are required. This action carries the manual charge pawl (13), which engages the ratchet wheel (10), imparting to it the same counterclockwise motion which results from operation of the motor, and charging the closing springs (See Figure 22).

Closing the Recloser

As described above, the charged closing springs (18) are prevented from rotating the crankshaft (15) by the restraint of the spring release latch (7) on the stop roller (6) of the close cam (5). Release of the close cam occurs when the front end of the spring release latch is lowered: the close cam is then free to rotate approximately 180° under the force of the closing springs, to apply force to the lower end of the mechanism link (50), and, through it, to the main crank (46). Rotation of the main crank then applies force to the main drive link (48), causing the crankshaft drive to close the recloser. The closing operation also compresses the opening spring (19). During rotation, the drive plates move away from the ratchet wheel pin. The ratchet wheel does not rotate during the closing operation, thus preventing excessive wear on the teeth and pawls. Rotation of the crankshaft causes the motor cutoff switch (28) to reclose, and if motor power is available, the motor again operates the oscillator and, through it, the ratchet wheel, and again the closing springs are recharged.

Closing of the recloser can be effected manually, by the application of force on the "PUSH TO CLOSE" bar (62), which depresses the spring release latch through a bell crank link (59), releasing the close cam. Figure 23 illustrates the interlock which prevents a manual "close" effort from being effective when applied to a recloser already in the closed position.

The recloser can also be closed electrically by energizing the coil of the spring release device (8). *(IEEE Device No. 52/CC)*

Latch Check Switch

The operating point of the latch check switch is adjustable as shown in Figure 25. The switches are operated by a common lever which is actuated by the adjusting screw. The screw adjustment should be set such that the trip latch is firmly engaged by the trip shaft before the switches are operated. This ensures that the closing circuit cannot be energized until the latch is fully reset.

Opening the Recloser

Referring to Figure 16 and Figure 24, the force of the opening spring (19), acting through the operating shaft drive link (80), the main drive link (48), and the mechanism lever assembly (46), applies a downward force to the mechanism link (50). This downward force on this link pulls on the pivot point between it and the trip latch constraining link (3), tending to move that link (3) in a counterclockwise direction. However, as shown in the enlarged view of the trip shaft latch details (Figure 24-d), the trip latch (4) cannot move, because of interference with the trip shaft (2). Thus, a slight counterclockwise rotation of the trip shaft will release latch (4), link (3), and link (50), allowing the opening spring to collapse the linkage, and the crankshaft drive (49) to move the recloser to the open position.

Opening of the recloser can result from a manual tripping operation in which case a downward pull on the trip rod (82, in Figure 15), the lower end of which projects from underneath the control compartment, moves connected linkages which (a) rotate the trip shaft (2), allowing the unit to open, as described above, and (b) open the manual lockout switch (*IEEE Device No. 69*) to block subsequent attempts to reclose with a manual reset operation, using reset handle (83).

The recloser can be opened by energizing the shunt trip coil (1), causing the trip shaft (2) to rotate as described in the preceding paragraph; however, such opening action does not open the manual lockout switch.

Trip Free Operation

Referring to Figure 24 and Figure 25, if the closing springs are charged, and if a fault exists, the associated circuitry will, when the recloser auxiliary switch closes, energize the shunt trip coil (1) (*IEEE Device No. 52/TC*). This in turn rotates the trip shaft (2) counterclockwise to release the trip latch (4); an attempt to close the recloser manually will not succeed, since there is no restraint on the trip latch constraining link (3), and no force is applied on the mechanism link (50).

OPERATIONAL CHECK PRIOR TO INSTALLATION

The recloser should be test operated for mechanical and electrical operation before delivery to the installation site. Remove the cover of the mechanism compartment so as to observe the mechanical operations.

Operational Check—Manual

(See Figure 16 and Figure 17)

If the indicator shows "SPRING DISCHARGED," insert the manual charge handle (23) into the manual charge device (16) and crank the closing springs by pulling forward, six to eight times, on the upper end of the handle. This action rotates the ratchet wheel (10) until the crank arms (17) go over center, charging the closing springs; the indicator flag then shows "SPRING CHARGED."

If the recloser position flag shows "OPEN," depress the "PUSH TO CLOSE" bar to close the recloser contacts; this action will (a) move the flag to "CLOSED", (b) move the spring indicator to "SPRING DISCHARGED", and (c) compress the opening spring (19), visible in the upper part of the mechanism compartment.

If the recloser is already closed, the "PUSH TO CLOSE" bar is inoperative, and the unit should be tripped open, by pulling the trip handle projecting from the bottom of the control cabinet. (This action operates the manual lockout switch.) The recloser can be reclosed manually, as described above, but subsequent electrical operation requires resetting the manual lockout switch, by pushing upward on the reset knob (83 in Figure 15) which projects from the bottom of the control cabinet, near the trip handle.

Operational Check—Electrical

Reference to Figure 26 and Figure 27 will help to illustrate general features of the circuitry of a typical relay-controlled recloser; this is merely a guide, since all electrical connections to the control circuit should be made only in accordance with the diagrams supplied for the specific recloser.

NOTE

Consult nameplate for proper voltage. A single-phase, 60-Hz source is to be connected to the input terminals —"X" and "Y." Close the main breaker switch. If the springs are discharged, the motor will immediately run, charging the closing springs, and cutting off the motor through the MCO switch (28).

Electrical Close

Observe indicator lamps, and "101" switch (*IEEE Device "CS"*). If green lamp is on, recloser is open; move control switch handle to "close." Auxiliary relay AR picks up, energizing 52X relay through 52Y-NC, 52/LC-1-NO (held closed by trip latch[4]), 52b, AR-NO (now closed by its coil), and CS-SC. The 52X relay picks up, closing two 52X-NO contacts, energizing spring release device (8), and the recloser closes in. The 52Y relay picks up, through 52a and 52X-NO, seals itself in through its 52Y-NO contacts, AR-NO, and the CS-SC contact, and 52X drops out as 52Y-NC opens. Release of the CS handle allows relay AR to drop out, releasing 52Y also.

Electrical Trip

If the red lamp is on, recloser is closed; move control switch handle to "open." Latching relay LR/2 is energized through LR/1-NC. The shunt trip coil 52/TC (1) is energized through LR/2-NO (now closed) and 52a. The recloser opens, the 52/TC drops out.

If the recloser is tripped manually, this action opens the lockout switch (*IEEE Device No. 69*) and the recloser cannot be closed electrically until this switch is reset manually.

PERMANENT INSTALLATION

The recloser should be located so that it is readily accessible for manual operation and inspection. All overhead construction work should be completed before the unit is installed. Care should be taken when installing the unit that the lifting devices do not come in contact with the bushings.

The recloser must be level and firmly secured, for satisfactory performance.

Recloser Mounting

Automatic reclosers may be installed in a variety of mountings. They may be set in substation frames, mounted from pole-supported crossarms, or hung on existing steel frameworks.

The substation frame is adjustable in height to meet various electrical codes and provide flexibility of installation.

Suitable mounting fixtures for all installations, with optional windlass for lowering the oil tank, are available on special order.

Line Connections

The recloser is connected in series with the line, facing either direction, as there is no distinction between line and load terminals. Power to operate the recloser mechanism, when tapped from the conductors being protected, must be taken from the line side for proper reclosing. Precautions must be taken to insure that ALL wires to be connected to the unit are not energized.

A small amount of slack should be allowed in each conductor connected to the terminals so as to eliminate undue strain on the bushing assemblies.

The substation mounting frame has provision for grounding, with standard NEMA two-hole bolting.

Control Connections and Wiring

CAUTION

CONSULT NAMEPLATE, SCHEMATIC, OR CONNECTION DIAGRAMS FOR PROPER VOLTAGE SOURCE.

All electrical connections to the control circuit should be made in accordance with the diagrams supplied for the specific recloser.

The heaters and the spring charging motor require a single-phase, 60-Hz voltage source (as indicated on nameplate and pertinent diagrams), obtained from a secondary circuit on the line side of the recloser, or from an independent source. It should be capable of supplying 12 amperes with a maximum voltage drop of 20%, for units having AC close and trip functions. For units having DC close and trip functions, the voltage of the source, under load, must be within the limits outlined in Table II, "Operating Voltage Range."

FINAL INSPECTION

When the recloser has been installed and all mechanical and electrical connections completed, EXCEPT ENERGIZING THE POWER LINE, the following points of inspection are recommended.

Mechanical and Electrical Inspection

1. Check the high voltage tank to insure that it is filled to the proper level with clean insulating oil and that the tank liners are in position. (See section below describing "Insulating Oil.")

Lower the oil tank and remove the mechanism cabinet cover for inspection of the interrupters and mechanism. Check the mechanism for loose screws or nuts and broken parts. (Refer to Section in this book, "Inspection, Maintenance, and Adjustment," for detailed instructions on lowering the oil tank.)

2. Be sure that the bearings and operating mechanism are free of foreign matter. Lubrication is not normally required. A thin coat of light mineral oil may be used, in extreme cases.

3. See that the recloser is properly leveled and securely anchored.

4. Make a final check for tightness of hardware—contacts, shunts, lift rods, etc.

5. See that the tank gaskets are in place and undamaged.

6. The bolts securing bushings to head casting should be evenly tightened to 20-25 lb./ft. (2.8-3.5 kg-m).

7. Terminal connections should be securely tightened.

8. Check control cable entrance fittings for tightness.

9. Examine control wiring insulation for evidence of chafing or abrasion. If desired, a dielectric test can be made, duplicating details of production tests, as described earlier in this book. Check connections, according to schematic or connection diagrams.

Insulating Oil Inspection

Unless otherwise specified, reclosers are shipped with the required amount of WEMCO "C" insulating oil. Before energizing, oil level should be checked, by use of oil sight gage (if unit is so equipped), or by lowering the tank to observe residual markings on the tank wall. If the unit has been stored for a period of time, it may be desirable to withdraw a sample of the oil (using the sampling valve) and test per ASTM D-877. The sample should withstand 25 kV when so tested.

If refilling is necessary, use either inhibited or non-inhibited Wemco "C" oil. If possible, the preparation and refilling of outdoor apparatus should be done on a clear, dry day. In all cases, protection must be provided against the entrance into the oil of moisture and dirt. To avoid condensed moisture, the recloser tank and the oil supply should be approximately the same temperature.

INSPECTION, MAINTENANCE, AND ADJUSTMENT

Periodic Inspection

The safety and successful functioning of any apparatus or system connected with the recloser depends to a large extent on the proper and reliable operation of the unit.

To this end, the recloser must have systematic inspection at regular intervals. Operating experience, based on the number of operations, magnitude of current and any unusual operation which occasionally occurs, will soon establish a maintenance schedule which will give assurance of proper recloser reliability. The following check list is a minimum inspection guide.

1. Check the bushings; clean if contamination is evident; examine carefully for hairline cracks. If bushing replacement is necessary, follow procedure described below.

All six bushings of the recloser are identical, but the three rear bushings—those farthest from the mechanism compartment—support the interrupter grid assemblies; and the flexible shunt members from the grid assemblies are connected to the front bushings. The central conductor stud through the bushing is fitted at its lower end with a base (for attachment of the grid assembly or the flexible shunt), and is threaded at its top end, for terminal attachment. The assembly is sealed, with gaskets and spring ("Belleville") washers, at its upper end to prevent the entrance of moisture from the outside air. At the lower end, a small vent hole allows insulating oil to enter the bushing as it "breathes" with temperature changes.

The bushing assemblies are sealed to the head casting, with cork/rubber gaskets, and are held in place with clamps, held in turn by bolts threaded into the casting.

2. The oil tank should be lowered for inspection of the high voltage components.

NOTE

Provision must be made for supporting the tank filled with oil. This is done most conveniently using the tank lifter windlass, if this optional accessory is present.

Lowering the Oil Tank—ES Recloser
(See Figure 28)

Engage windlass brackets in the tank brackets. Remove the seven bolts holding the top casting to the tank. Lower the tank with the windlass until the interrupters are exposed.

Lowering the Oil Tank—ESM Recloser
(See Figure 29)

Remove the seven bolts holding the top casting to the tank. Carefully unscrew the frame bolts to release the brackets from their mounting and provide lowering clearance. Remove the tank bolts and lower the tank with the windlass. As the crank is turned, the top casting will drop 1/8 inch (3 mm) to rest on the mounting frame flange. The tank may then be lowered until the interrupters are exposed.

To reposition the tank on either the ES or the ESM, reverse the procedure, being careful to tighten securely all bolts.

3. The tank liners should be checked carefully for breaks and cracks. If any are found, the liners should be replaced.

Replacement of Bushings

4. If bushing replacement is required, it is performed after cables have been disengaged from the bushing terminals. The bolts in the bottom end of the bushing are removed, as well as the interrupter grid, or shunt, whichever bushing is involved.

Remove the bolts from the head casting, remove the hold-down clamps, and carefully remove the bushing assembly. Clean the gasketing surface, removing all old cement and gasket particles.

Replace with new gaskets, using rubber-base adhesive (such as Armstrong "D-222," or Bostik "1096") to secure gasket to both bushing and casting. Seat bushing on gasket, orienting assembly to conform to its original position.

NOTE

The replacement of the rear bushings is, of course, more critical: the interrupter grid assemblies must be replaced exactly in their original position, to allow the moving contacts to move freely, and to penetrate the stationary contact in the same manner as originally assembled.

The second, or upper, gasket can be split to facilitate application, and is to be lubricated with a silicone grease (such as "DC-5" Compound) to seal hold-down clamps to the bushing. These clamps and their bolts are replaced, with torque applied, as indicated earlier in this book. The bolts must be tightened carefully, as the alignment adjustment (see "note" in preceding paragraph) is made during tightening of these bolts.

Other assembly steps are a reversal of the earlier disassembly operations.

5. Check the oil tank, mechanism compartment and control cabinet for rust and corrosion. If any is found, use a good grade of touch-up paint.

6. Open the control cabinet door and inspect the control panel for loose connections.

7. Check the condition of the moving contacts: release the dowel pin from the Micarta lift rod (67 in Figure 16) and lift the contact from the interrupter grid assembly. The lower end of the contact is terminated in an arcing tip, 3/4 inch (19 mm) long, with a 1/4 inch (6 mm) chamfer. Its original shape is depicted in Figure 7. Repeated interruptions cause erosion of this tip, but the contact will carry its full rating even though somewhat mottled and uneven in appearance. The condition of the moving contact is a good indication of the condition of the stationary contact. Some dressing of the moving contact is possible, if roughness is present.

CAUTION

DO NOT FILE AWAY ANY GOOD CONTACT MATERIAL UNLESS PITTING IS EVIDENT.

If the moving contact has been shortened by repeated interruptions, eroding away arcing material, it will be necessary to adjust the contact penetration, or "wipe." Also, if an interrupter grid assembly or a moving contact requires replacement, the wipe should be measured, and, if necessary, adjusted. This procedure is described below.

In earlier designs of the ES/ESM Recloser, the interrupter grid assembly is held under compression by nuts tightened onto insulated tie rod, holding top and bottom plates in place. (See Figure 7) In the ES Recloser, the stationary contacts can be adjusted by screwing a stud extension up into, or down out of, the bottom plate. Such adjustment is not possible with the ESM Recloser.

In later designs, the interrupter grid assembly is held under compression by non-adjustable tie rods. Also, the bottom plate has a removable section, allowing removal of the entire stationary contact assembly, for inspection or replacement. Again, the ES, but not the ESM, has an adjustable stationary contact assembly.

In both the earlier and the later designs, mounting of the grid assembly and attachment of shunt is accomplished in the same manner.

If the moving contact, upon examination, does not appear greatly different from its depiction in Figure 7, the contact wipe should be checked, and, if necessary, adjusted. Contact wipe is measured with the interrupter grid in place (bolted to its supporting bushing), as follows:

A. Close the recloser MANUALLY and scribe a line on the moving contact where it enters the upper plate.

B. Trip the recloser open.

C. Remove the pin (74 in Figure 16) connecting the operating shaft (73) to the shaft drive (49).

D. Using a continuity checker, connected to top and bottom plates, determine the point at which the moving contact engages the stationary contact, by manually rotating the operating shaft lever (81), lowering the moving contact in the interrupter grid assembly. When the circuit is completed, scribe another line on the moving contact, as in (A) above.

The difference between these two lines is the amount of contact wipe; it should measure 3/8 inch (10 mm) minimum.

E. If adjustment is required, see applicable section entitled "Stationary Contact Measurement and Adjustment," below.

8. If moving contacts are judged to require replacement, the interrupter grid assembly (in the earlier designs) must be disassembled. In the later designs (as indicated elsewhere in this book), a section of the bottom plate can be removed, along with the stationary contact assembly, to facilitate this contact replacement.

9. The earlier designs of interrupter grid can be disassembled by loosening the assembly nuts on the tie rods. Internal parts should be identified for careful reassembly. Plates should be examined for evidence of excessive erosion, indicating the need for replacement.

10. After reassembly—of a disassembled interrupter, or of a removable stationary contact—it will be necessary to check and possibly adjust the stationary contacts, for proper contact penetration.

Stationary Contact Measurement and Adjustment: Type ES Recloser (See Figure 7 and Figure 16)

10a. Loosen contact adjustment nut (76). (All three phases)

10b. Lower stationary contact assembly as far as possible. (All three phases)

10c. Remove pin (74) connecting the operating shaft (73) to the shaft drive (49). This allows operating shaft (73) to be moved by hand, independent of closing springs in mechanism.

10d. Loosen the locknut holding drive end (75) to shaft drive (49). Turn drive end (75) ONTO the shaft drive (49) as far as possible, advancing locknut ahead of drive end.

10e. Close the recloser mechanism MANUALLY.

10f. Rotate the operating shaft (73) by hand, lowering the moving contact assemblies until one of them bottoms against its stationary contact assembly. Raise the other two stationary contact assemblies as far as possible.

10g. Back drive end (75) off the shaft drive (49) until pin (74) can be replaced. Replace pin.

10h. Scribe a line on the moving contact where it enters the upper plate.

10i. Lower each adjusting stud **two full turns** (2/13 inch—4 mm).

10j. Trip the recloser open.

10k. Remove the pin (74) connecting the operating shaft (73) to the shaft drive (49).

10l. Using a continuity checker, connected to top and bottom plates, determine the point at which the moving contact engages the stationary contact, by manually rotating the operating shaft lever (81), lowering the moving contact in the interrupter grid assembly. When the circuit is completed, scribe another line on the moving contact, as in (h) above.

The difference between these two lines is the amount of contact wipe; it should measure 3/8 inch (10 mm) minimum.

10m. Reassemble pin (74) and tighten locknut on end (75). Also tighten locknut (76) on each interrupter assembly.

10n. Reclose and trip the recloser to insure that the operating shaft strikes the bumper assembly located in the head casting. Add copper shims, as required, to move operating shaft approximately 1/16 inch (1.5 mm) in the closed direction.

Stationary Contact Measurement and Adjustment: Type ESM Recloser (See Figure 7 and Figure 16)

10o. Start with the ESM Recloser in the open position. Remove the pin (74) connecting the operating shaft (73) to the shaft drive (49). Repeat step 10d, above.

10p. Close the recloser mechanism MANUALLY.

10q. Rotate the operating shaft (73) by hand, lowering the moving contact assemblies until one of them bottoms against its stationary contact assembly.

10r. Rotate shaft (73) back up, raising each moving contact by 1/8 inch (3 mm). Repeat steps 10g, 10h, 10j, 10k, 10l, 10m, and 10n, above.

11. The operating mechanism and motor should be inspected for smoothness of operation.

WARNING

IF THE FRONT PLATE IS TO BE REMOVED FOR MECHANISM SERVICE, ALL SPRINGS SHOULD BE FIRST DISCHARGED, LEAVING THE MECHANISM IN THE "OPEN" POSITION. THE INDICATING FLAG WILL SHOW WHETHER OR NOT THE MAIN SPRINGS ARE CHARGED.

12. The recloser has been designed to minimize lubrication requirements. A THIN coat of light mineral oil may be used on the working surfaces under extreme cases.

NOTE

For placing the unit back in service after inspection, follow the general procedure outlined in this instruction book.

STANDARD OPERATING DUTY

The Type ES and ESM Reclosers are designed to provide an operating duty as set forth in the USAS and NEMA Standards for Automatic Circuit Reclosers. The operating duty is determined by the maximum interrupting current rating corresponding to the frame rating. Consult pertinent Application Data for specific ratings.

When a recloser has completed an interrupting duty equivalent to the above, it should be removed from service at the earliest opportunity and overhauled. It is expected that this may require replacement of contacts, oil, and worn grid plates.

In order to insure that the recloser receives the proper service, a record of the operations should be maintained. Special note should be made of those interruptions at, or near, the maximum service time, as contact wear is in direct proportion to the current interrupted.

RENEWAL PARTS

A list of renewal parts recommended to be maintained in stock will be furnished on request. When ordering renewal parts, specify the name of the part, identify the recloser by including the type, amperes, volts, and shop order (S.O.) number as indicated on the nameplate.

Standard hardware items, such as bolts, nuts, and washers should be purchased locally. For replacement part prices, contact the nearest Sales Office of the Westinghouse Electric Corporation.

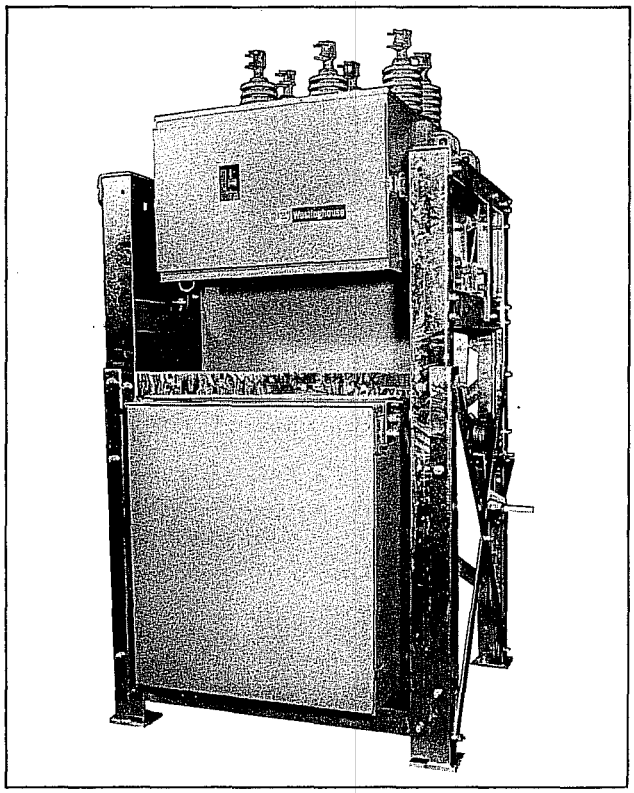

Fig. 1
Type ES/ESM Power Recloser in Substation Frame

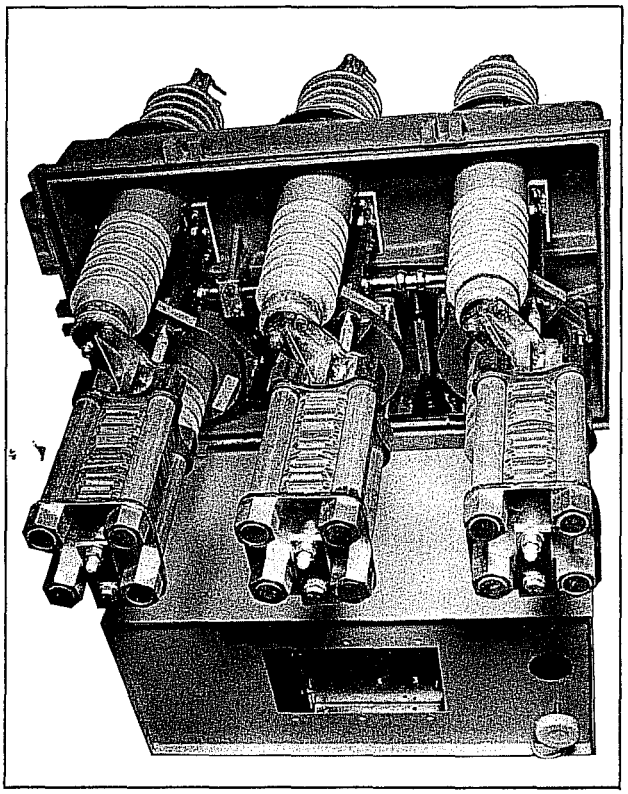

Fig. 3
Head Casting, with Interrupters, Shaft, Moving Contacts, and BCT's

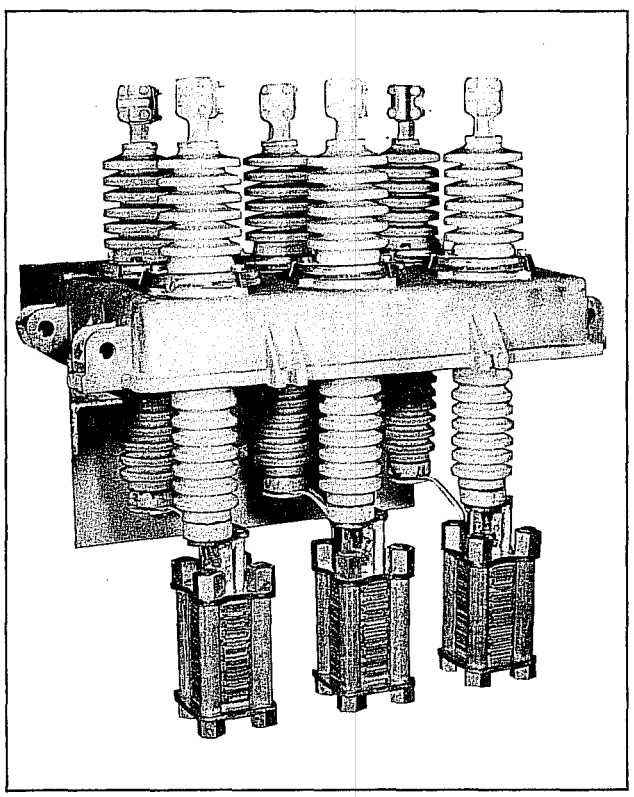

Fig. 2
Head Casting, High Voltage Bushings, and Interrupters

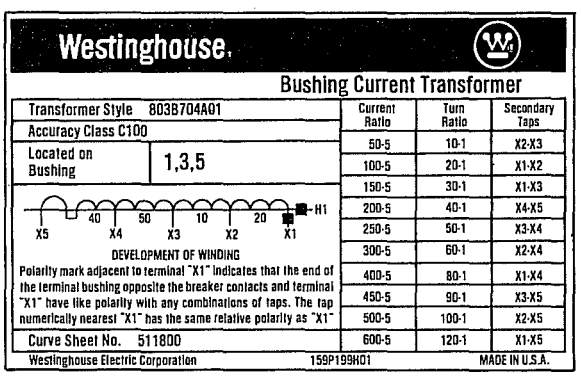

Westinghouse

Bushing Current Transformer

		Current Ratio	Turn Ratio	Secondary Taps
Transformer Style 803B704A01		50-5	10-1	X2-X3
Accuracy Class C100		100-5	20-1	X1-X2
Located on Bushing	1,3,5	150-5	30-1	X1-X3
		200-5	40-1	X4-X5
		250-5	50-1	X3-X4
		300-5	60-1	X2-X4
		400-5	80-1	X1-X4
		450-5	90-1	X3-X5
		500-5	100-1	X2-X5
Curve Sheet No. 511800		600-5	120-1	X1-X5

X5 40 X4 50 X3 10 X2 20 X1 H1

DEVELOPMENT OF WINDING

Polarity mark adjacent to terminal "X1" indicates that the end of the terminal bushing opposite the breaker contacts and terminal "X1" have like polarity with any combinations of taps. The tap numerically nearest "X1" has the same relative polarity as "X1"

Westinghouse Electric Corporation 159P199H01 MADE IN U.S.A.

Fig. 4
Typical Bushing Current Transformer Nameplate

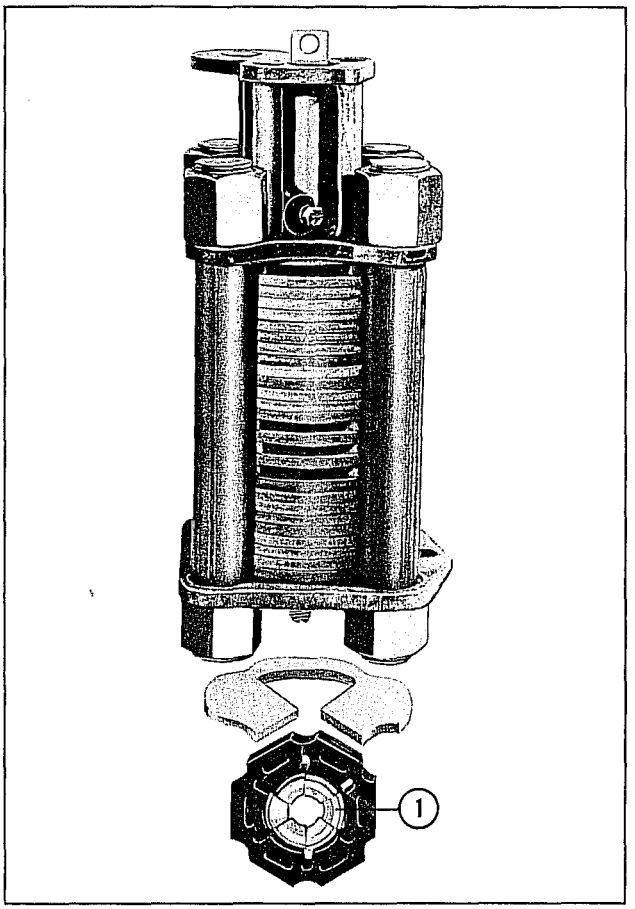

Fig. 5
Interrupter Grid Assembly (Earlier Design)

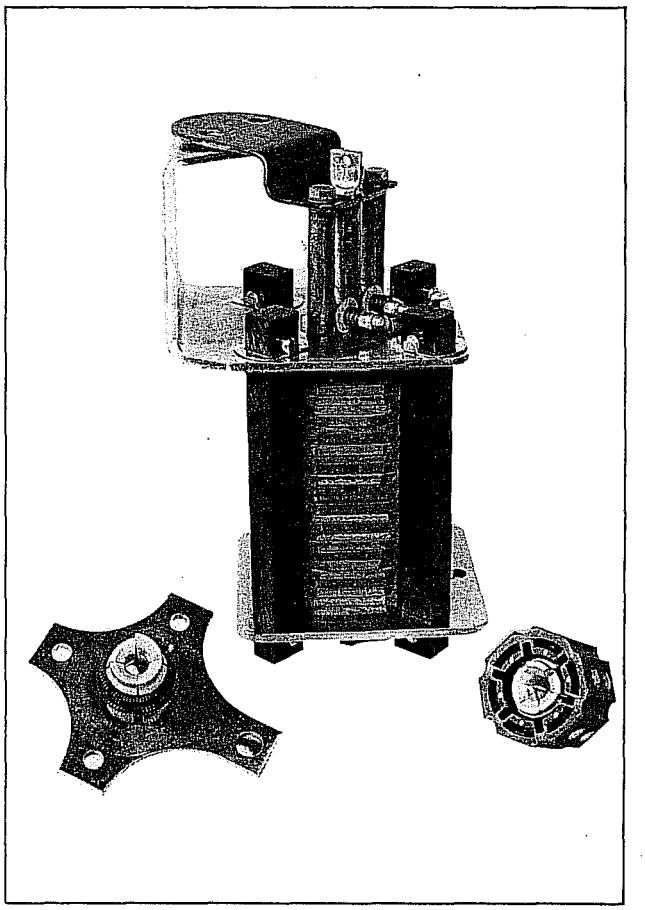

Fig. 6
Interrupter Grid Assembly (Later Design)

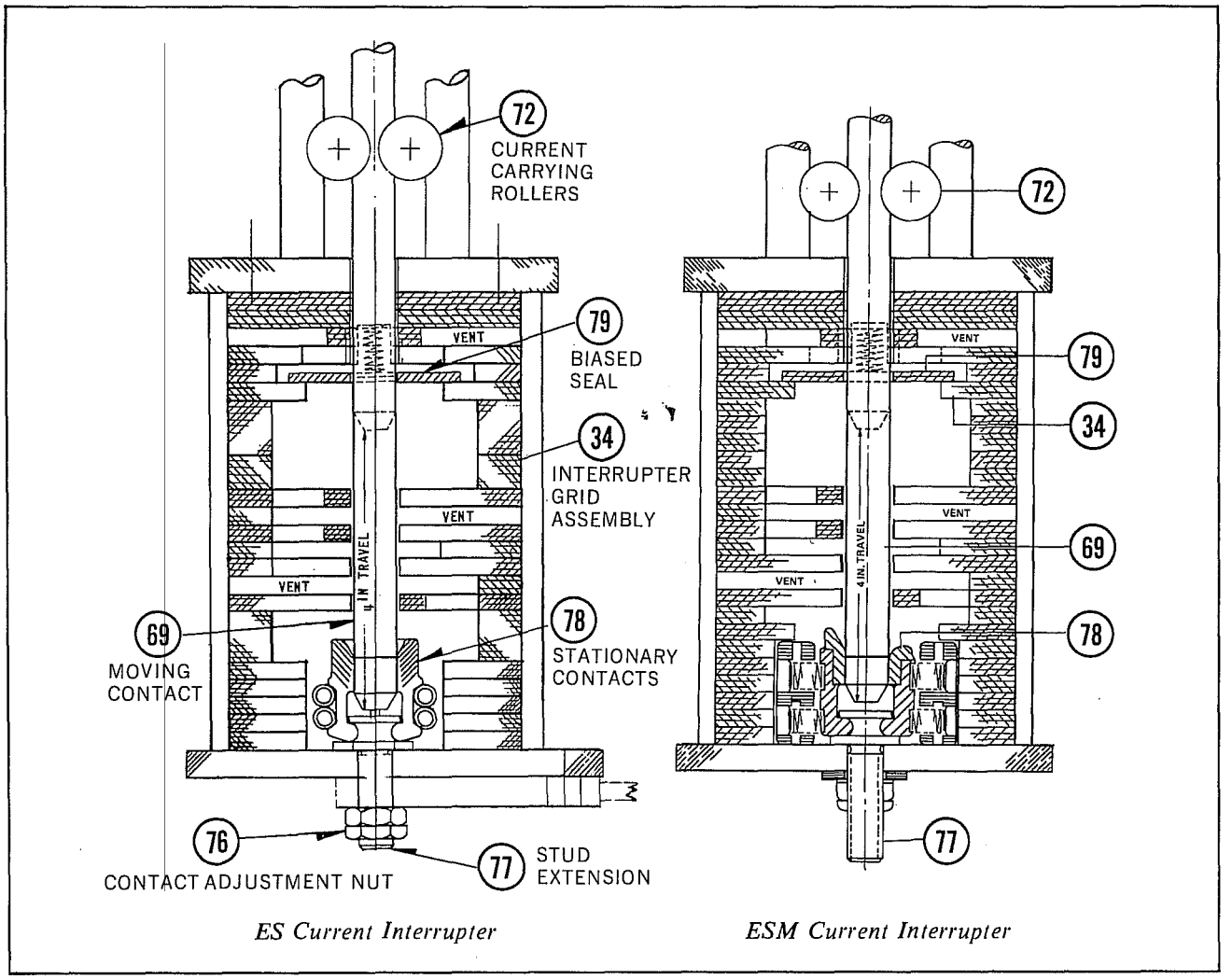

Fig. 7
Interrupter Grid Assembly—Internal Details (Earlier and Later Designs)

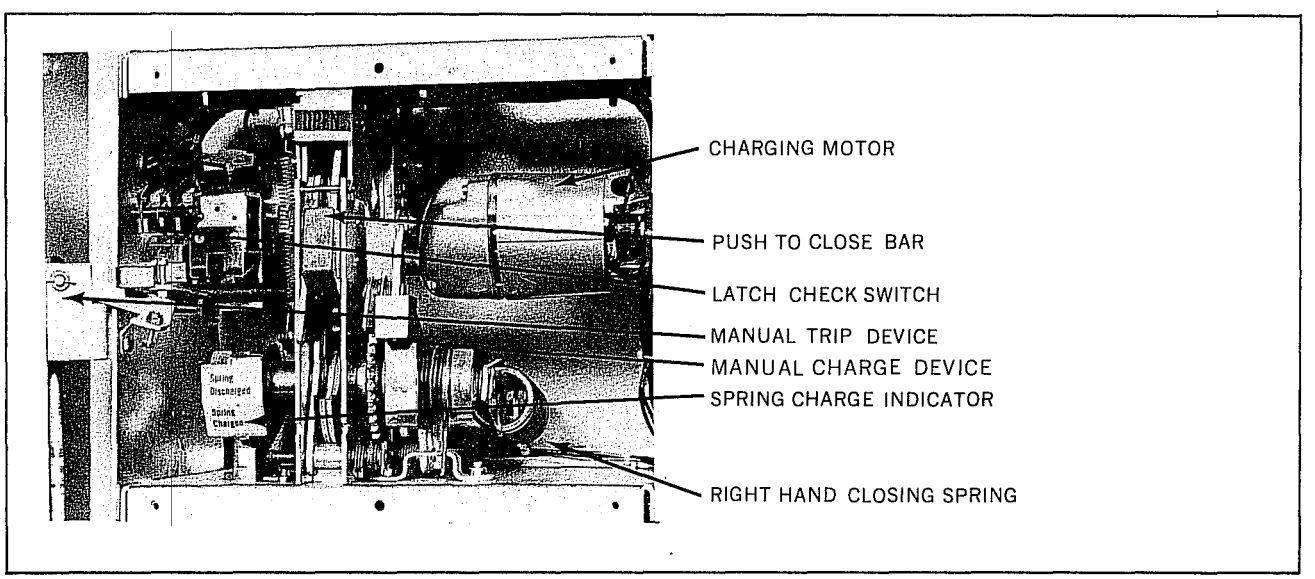

Fig. 8
Mechanism Details, Cover Removed, Front View

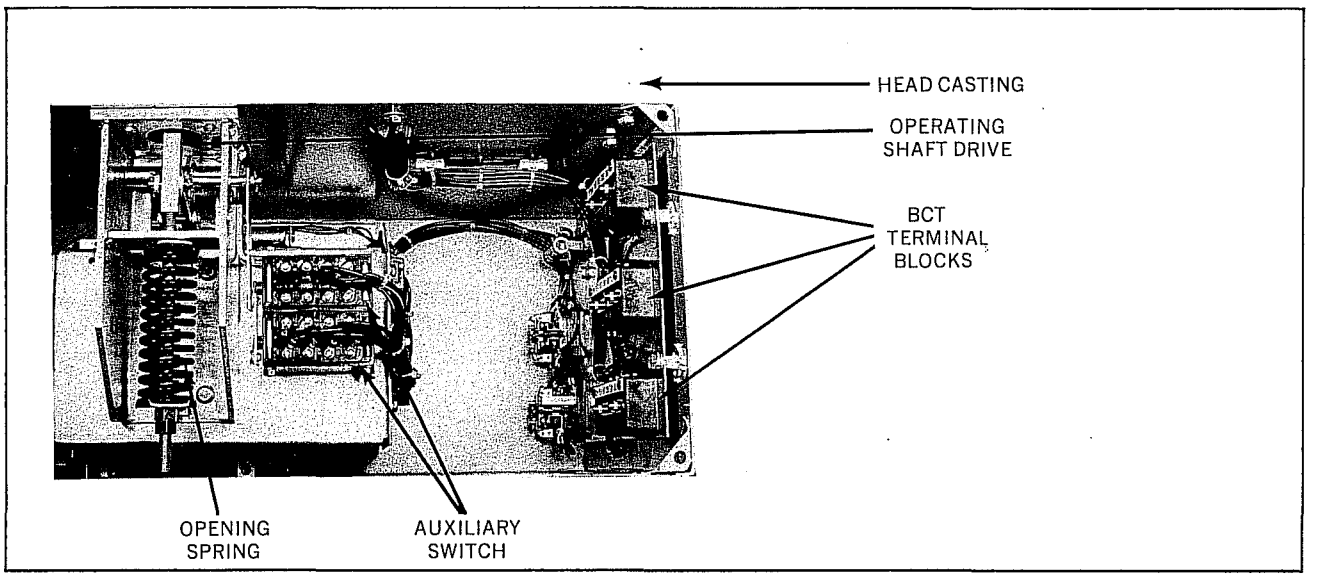

Fig. 9
Mechanism Details, Top View

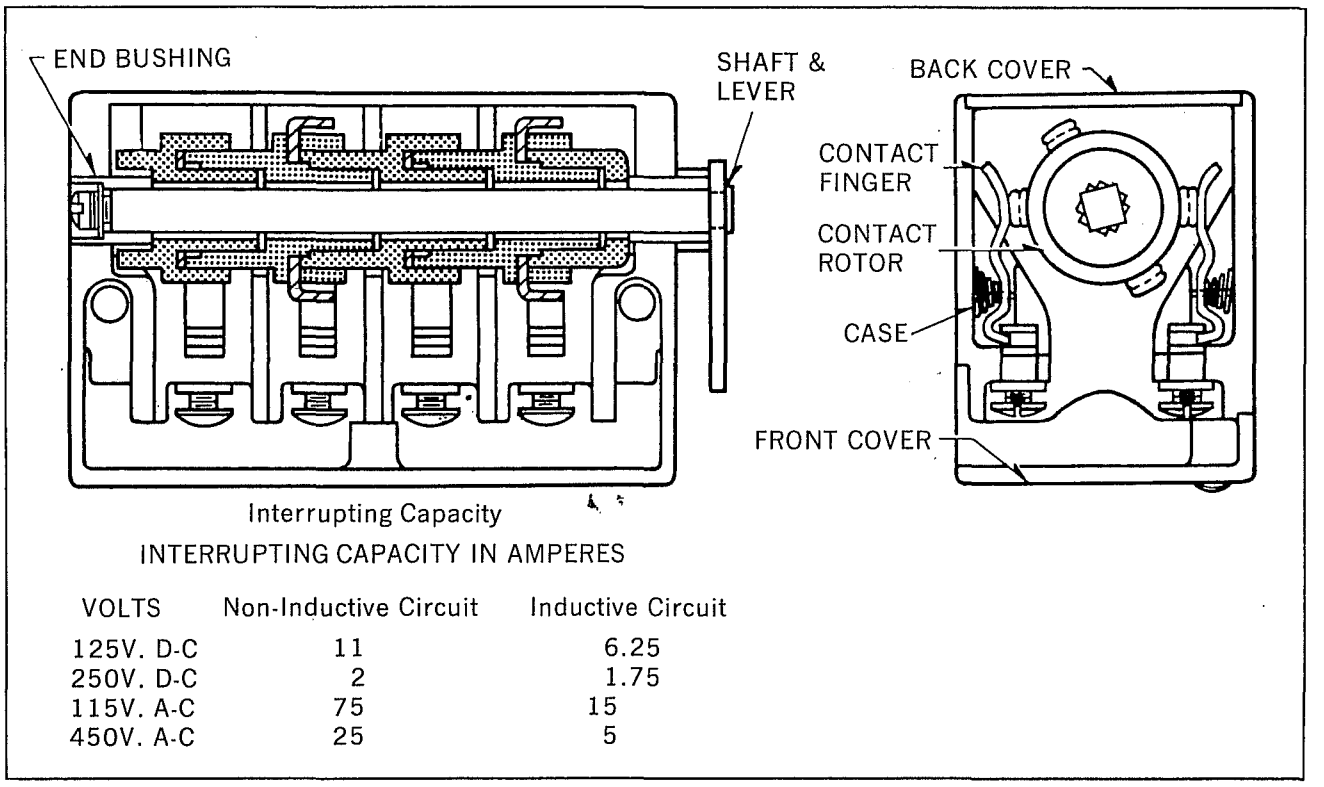

Interrupting Capacity

INTERRUPTING CAPACITY IN AMPERES

VOLTS	Non-Inductive Circuit	Inductive Circuit
125V. D-C	11	6.25
250V. D-C	2	1.75
115V. A-C	75	15
450V. A-C	25	5

Fig. 10
Auxiliary Switch, Details and Ratings

Westinghouse®

Type

Serial No.	S.O.	Date of Mfr.	Rated Frequency 60 Hz
Rated Continuous Amps.	Rated Max. KV 15.5	Rated Short Ckt. Amps. (SYM.)	FW Impulse Withshand KV. 110
Diagram No.	Instruction Book	Parts List	Rated Inter. Time Cycles 3
Closing Control Voltage Range to		Weight Lbs.	Oil Capacity Gal.
Tripping Control Voltage Range to		Recloser Contains Gd Trip Attach	Yes / No

Number of Bushing CTs Installed	Ratio 600/5		Factory Setting	/5	
	Ratio 1200/5			/5	
Maximum Short Ckt. Amps. (SYM.)	4.8 KV	8.32 KV	14.4 KV		

Westinghouse Electric Corporation 159P198H01 Made in U.S.A.

Fig. 11
Typical Recloser Nameplate

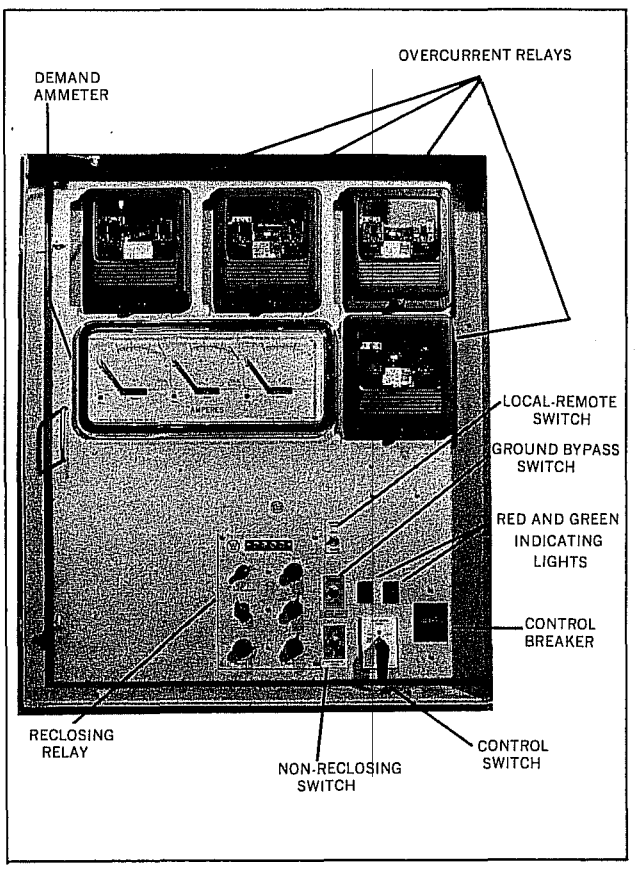

Fig. 12 *Typical Control Cabinet Panel—Relay-Controlled Recloser*

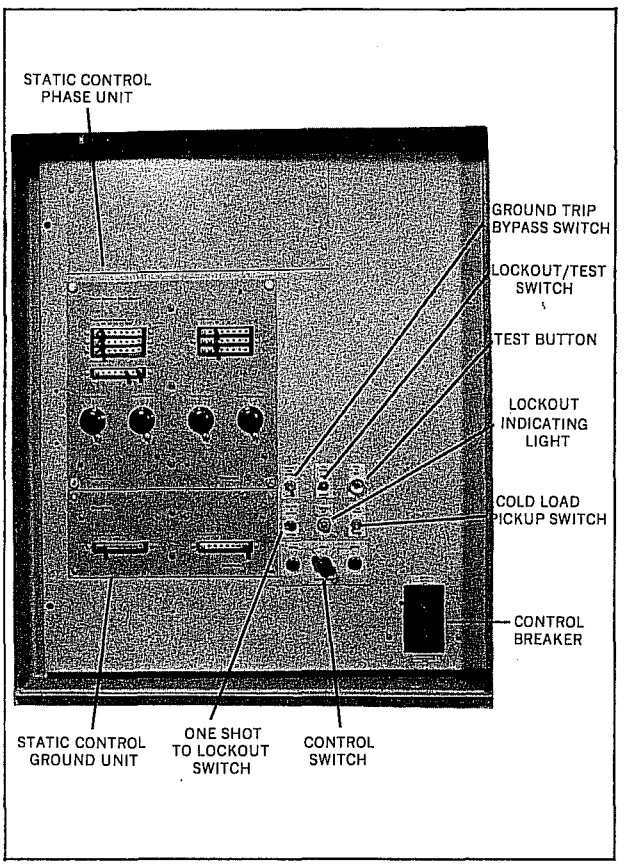

Fig. 13 *Typical Control Cabinet Panel—Static-Controlled Recloser*

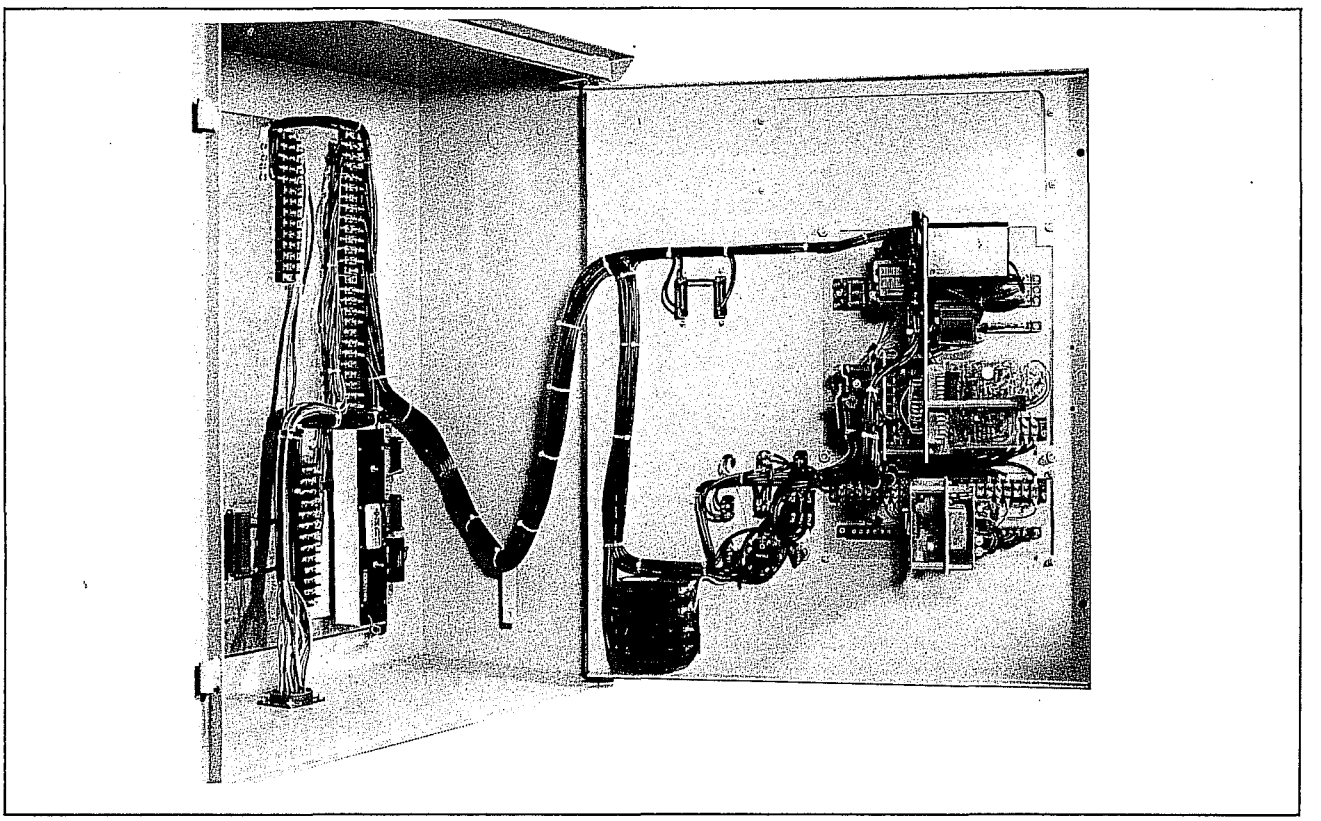

Fig. 14
Interior of Control Cabinet—Static-Controlled Recloser

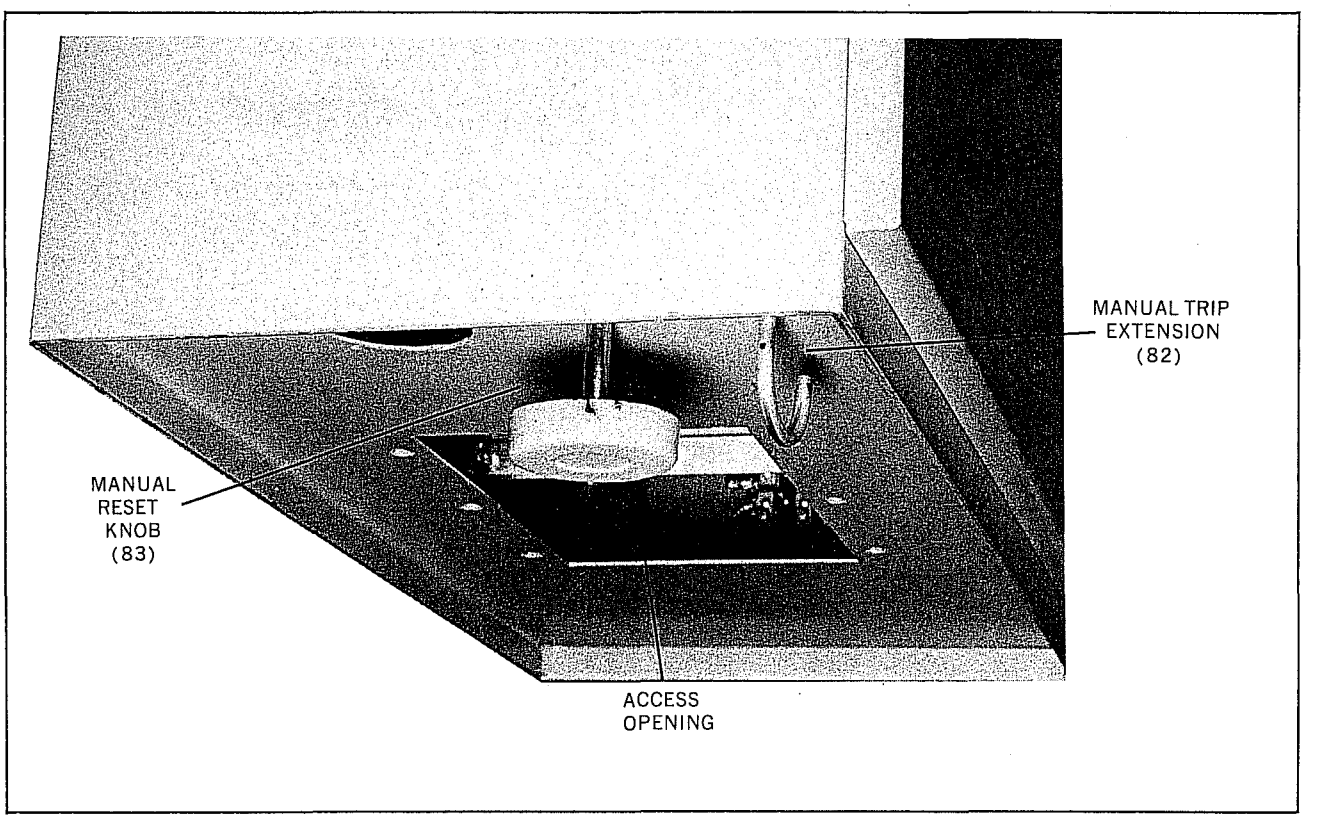

Fig. 15 *Bottom View of Mechanism Compartment, Showing Access Opening, Manual Trip Extension, and Manual Reset Knob*

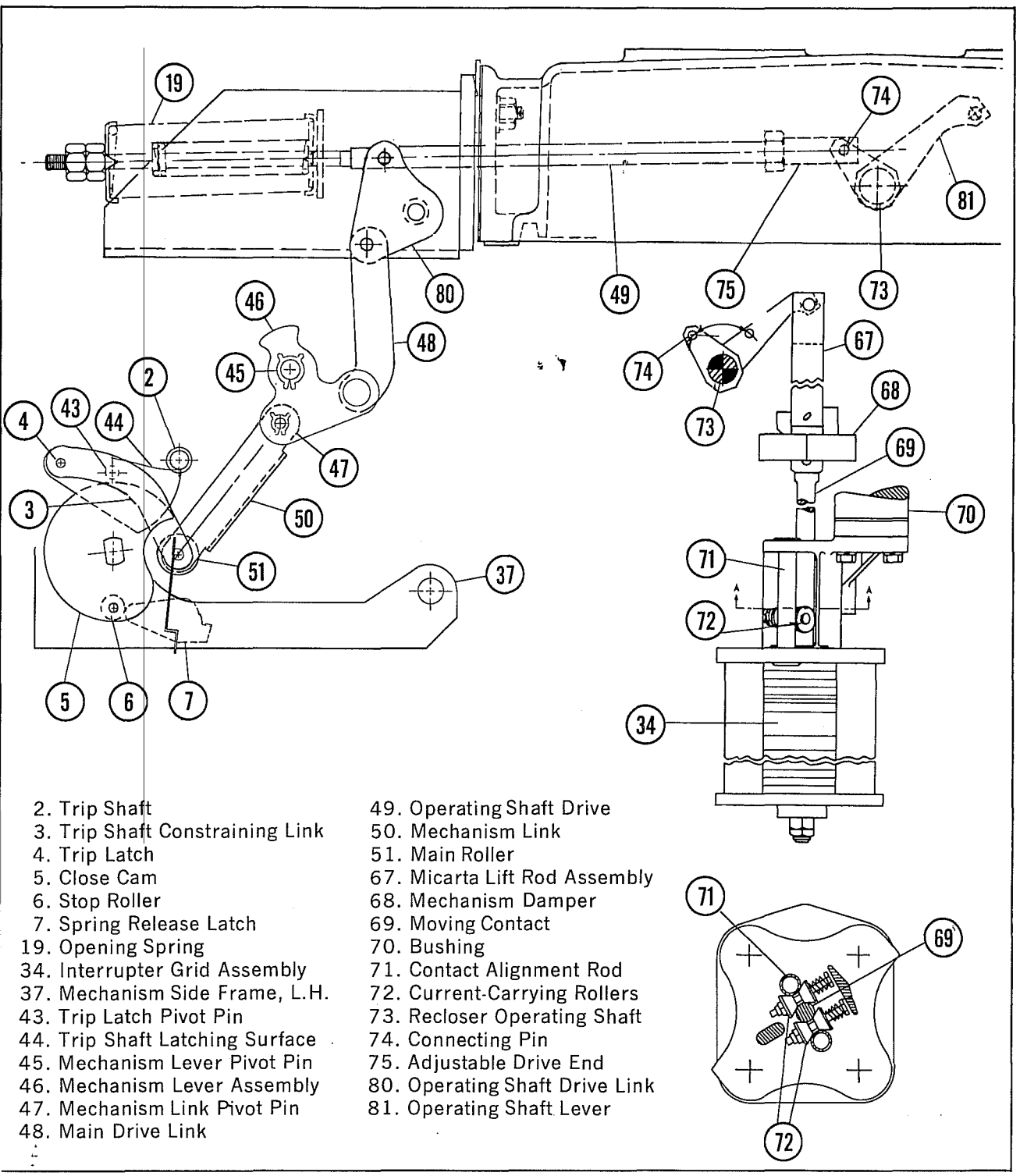

2. Trip Shaft
3. Trip Shaft Constraining Link
4. Trip Latch
5. Close Cam
6. Stop Roller
7. Spring Release Latch
19. Opening Spring
34. Interrupter Grid Assembly
37. Mechanism Side Frame, L.H.
43. Trip Latch Pivot Pin
44. Trip Shaft Latching Surface
45. Mechanism Lever Pivot Pin
46. Mechanism Lever Assembly
47. Mechanism Link Pivot Pin
48. Main Drive Link
49. Operating Shaft Drive
50. Mechanism Link
51. Main Roller
67. Micarta Lift Rod Assembly
68. Mechanism Damper
69. Moving Contact
70. Bushing
71. Contact Alignment Rod
72. Current-Carrying Rollers
73. Recloser Operating Shaft
74. Connecting Pin
75. Adjustable Drive End
80. Operating Shaft Drive Link
81. Operating Shaft Lever

Fig. 16
Relation of Mechanism, Linkages, and Interrupter Assembly

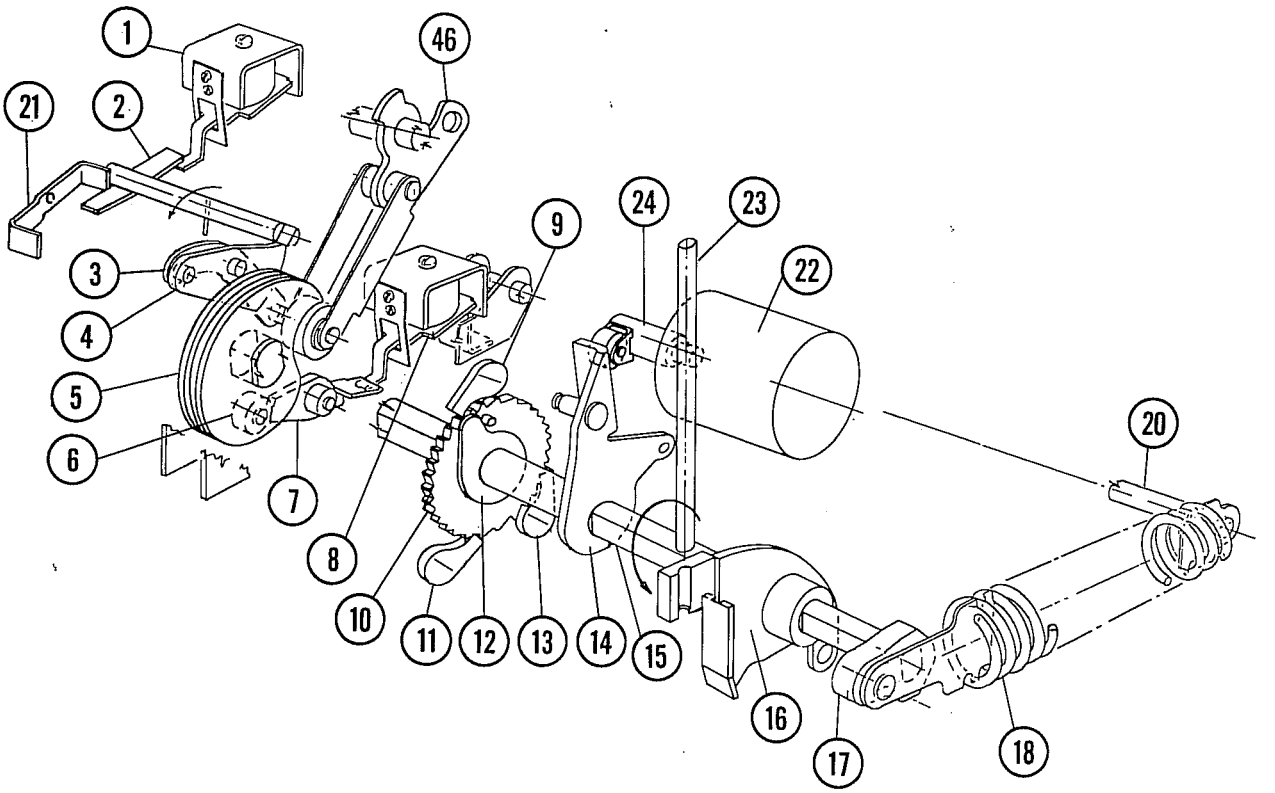

1. Shunt Trip Coil *(IEEE Device 52/TC)*
2. Trip Shaft
3. Trip Latch Constraining Link
4. Trip Latch
5. Close Cam
6. Stop Roller
7. Spring Release Latch
8. Spring Release Device *(IEEE Device 52/CC)*
9. Oscillator Pawl
10. Ratchet Wheel
11. Hold Pawl
12. Drive Plate
13. Manual Charge Pawl
14. Oscillator
15. Crankshaft
16. Manual Charge Device
17. Crankarm (2)
18. Closing Spring (2)
20. Closing Spring Anchor
21. Manual Trip Lever
22. Motor (52/M)
23. Manual Charge Handle
24. Motor Crank Arm
46. Mechanism Lever Assembly

Fig. 17
General Arrangement of Principal Parts of Mechanism

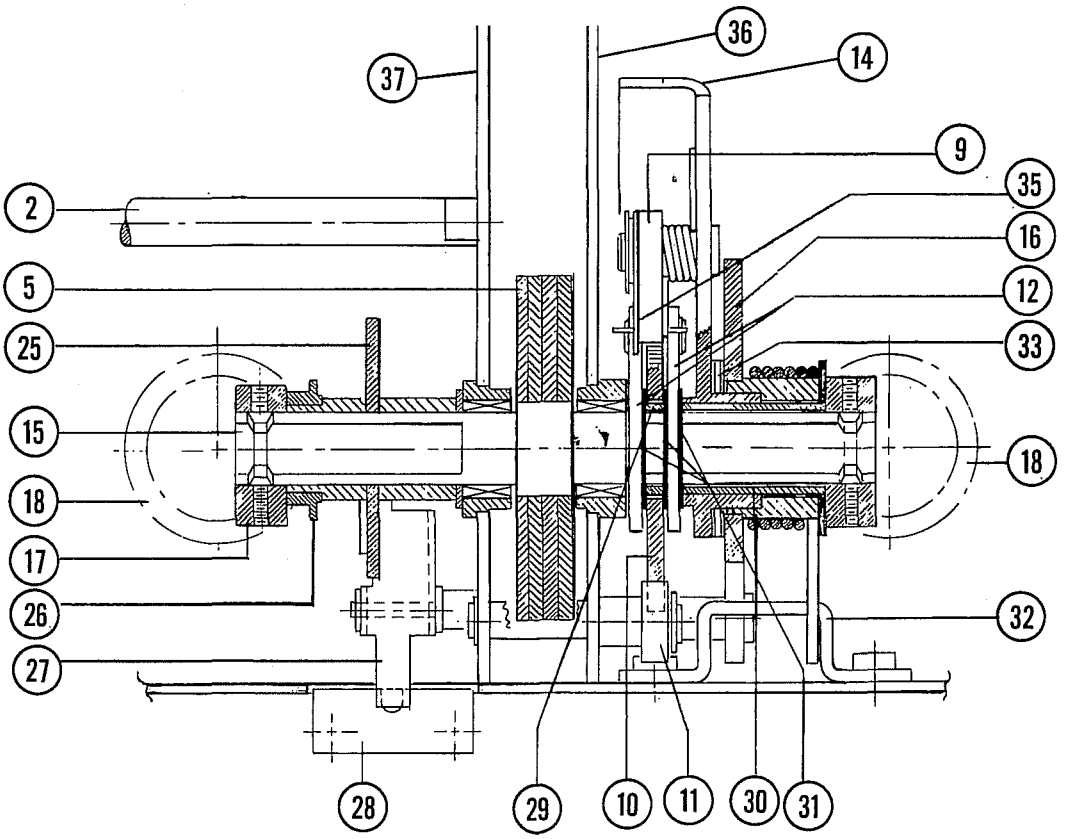

2. Trip Shaft
5. Close Cam
9. Oscillator Pawl
10. Ratchet Wheel
11. Hold Pawl
12. Drive Plate
14. Oscillator
15. Crankshaft
16. Manual Charge Device
17. Crankarm (2)
18. Closing Spring (2)
25. Motor Cut-off Switch Cam
26. Spring Charge Indicator
27. Motor Cut-off Switch Lever
28. Motor Cut-off Switch (MCO)
29. Ratchet Bushing
30. Oscillator Bushing
31. Spacer (3)
32. Stop Bracket
33. Thrust Bearing and Races
35. Pawl Lifter
36. Mechanism Side Frame, Right Hand
37. Mechanism Side Frame, Left Hand

Fig. 18
Front View of Principal Parts of Crankshaft Assembly

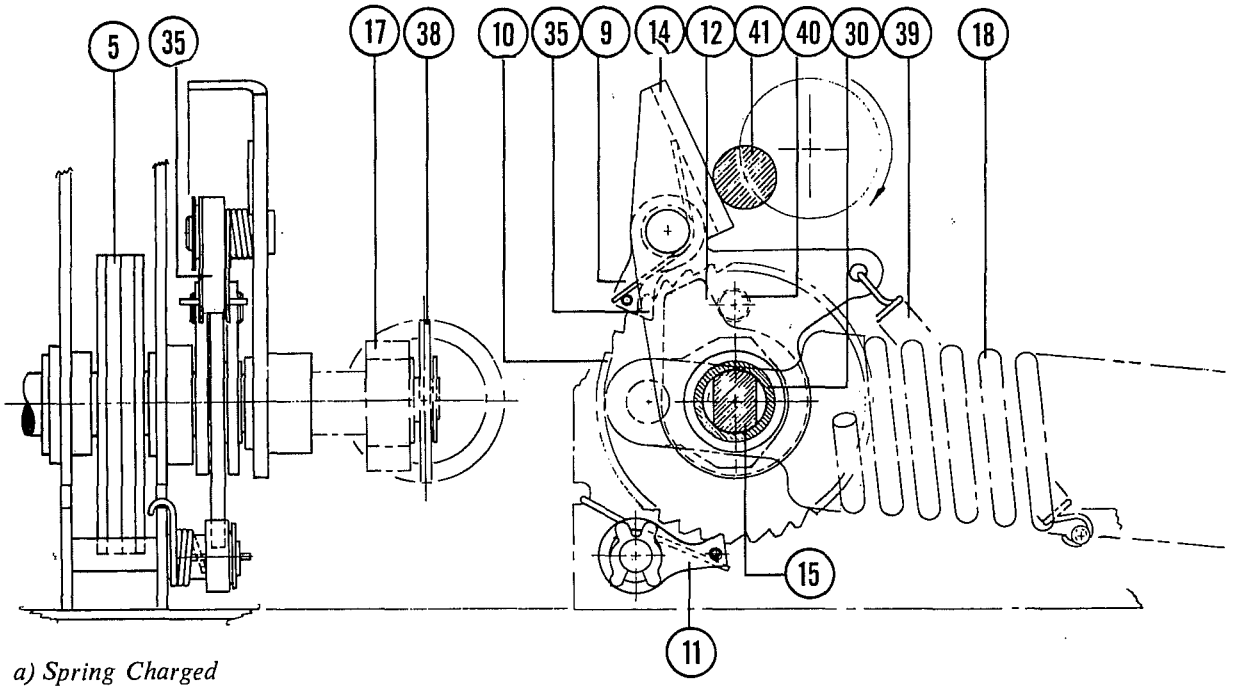

a) Spring Charged

Note: Main cam position for this crank shaft position is shown in Fig. 24.

5. Close Cam
9. Oscillator Pawl
10. Ratchet Wheel
11. Hold Pawl
12. Drive Plate
14. Oscillator
15. Crank Shaft
17. Crank Arm
18. Closing Spring (2)
30. Oscillator Bushing
35. Pawl Lifter
39. Oscillator Spring
40. Ratchet Wheel Pin
41. Motor Crank Roller

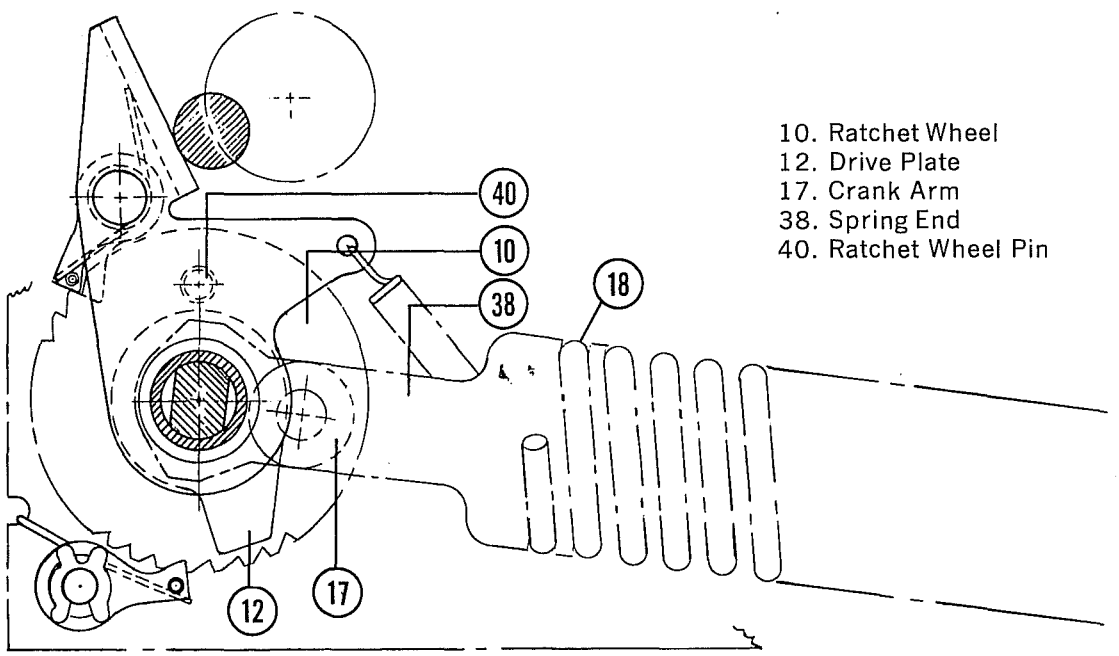

10. Ratchet Wheel
12. Drive Plate
17. Crank Arm
38. Spring End
40. Ratchet Wheel Pin

b) Spring Discharged

Fig. 19
Details of Closing Springs

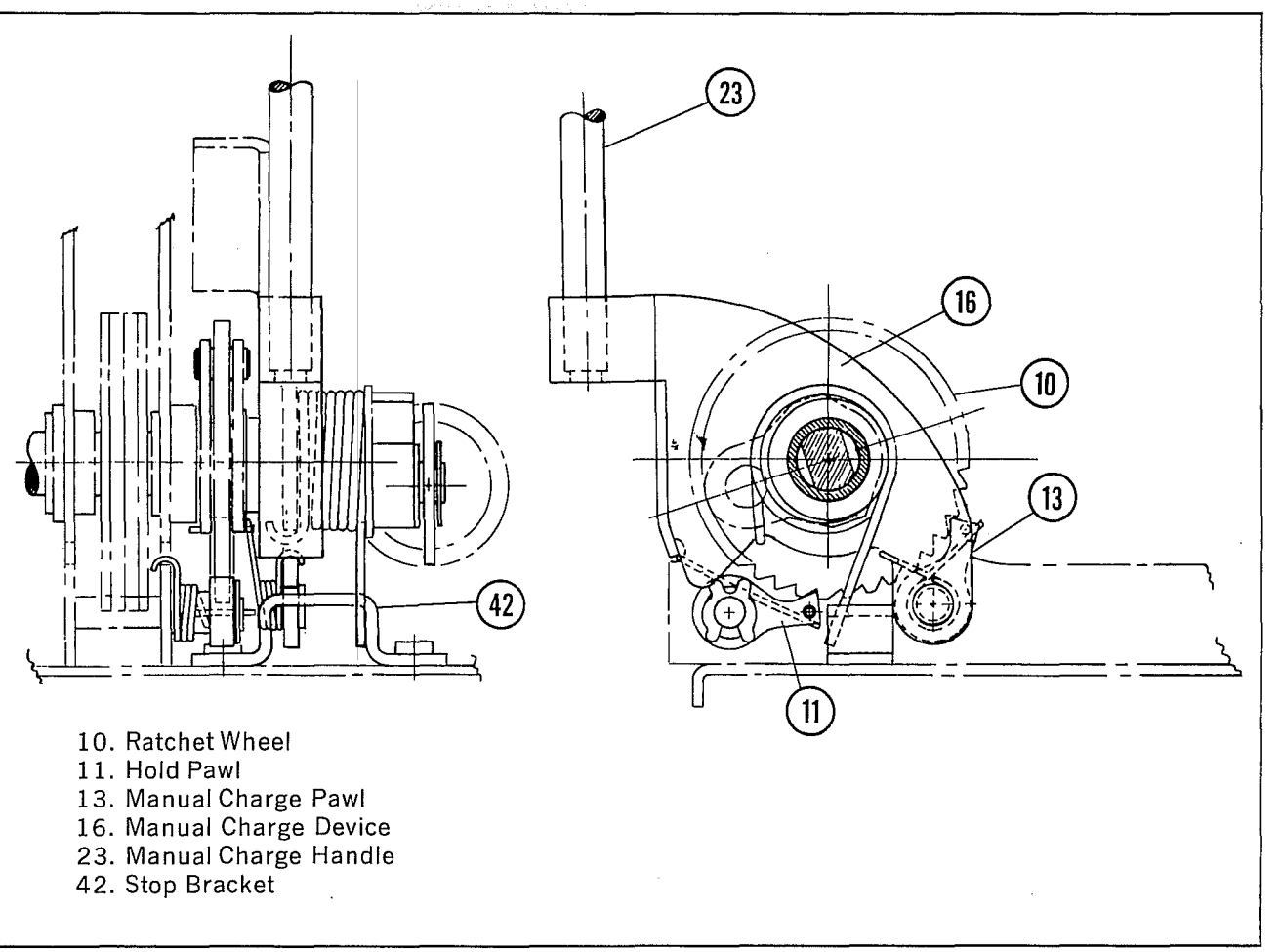

10. Ratchet Wheel
11. Hold Pawl
13. Manual Charge Pawl
16. Manual Charge Device
23. Manual Charge Handle
42. Stop Bracket

Fig. 20
Details of Manual Charge Device

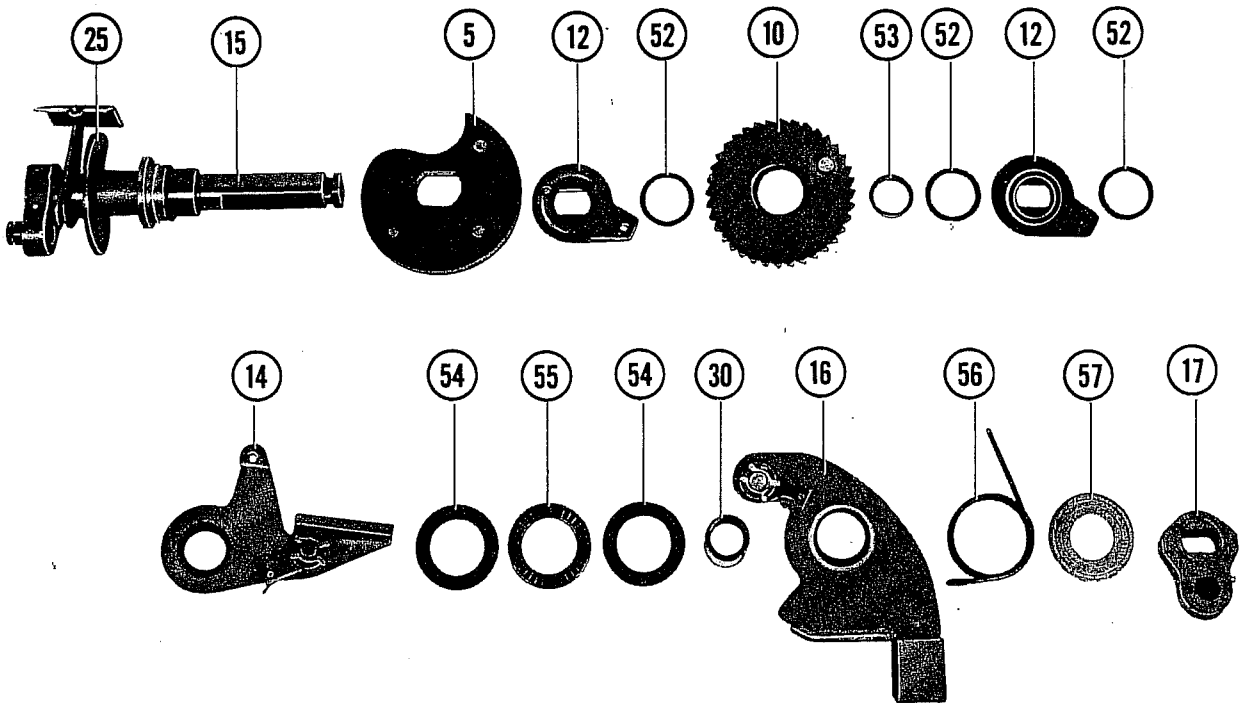

5. Close Cam
10. Ratchet Wheel
12. Drive Plate
14. Oscillator
15. Crankshaft
16. Manual Charge Device
17. Crankarm (2)
25. Motor Cut-off Switch Cam
30. Oscillator Bushing
52. Precision Spacer (3)
53. Ratchet Bushing
54. Bearing Race (2)
55. Thrust Bearing
56. Charge Device Return Spring
57. Spring Retainer

Fig. 21
Details of Crankshaft Assembly

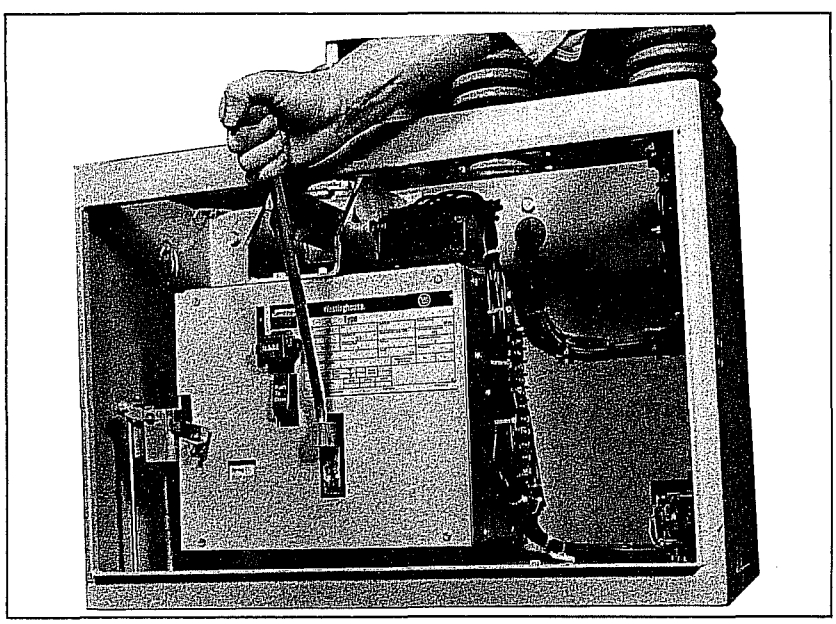

Fig. 22
Operation of Manually Charging the Closing Springs

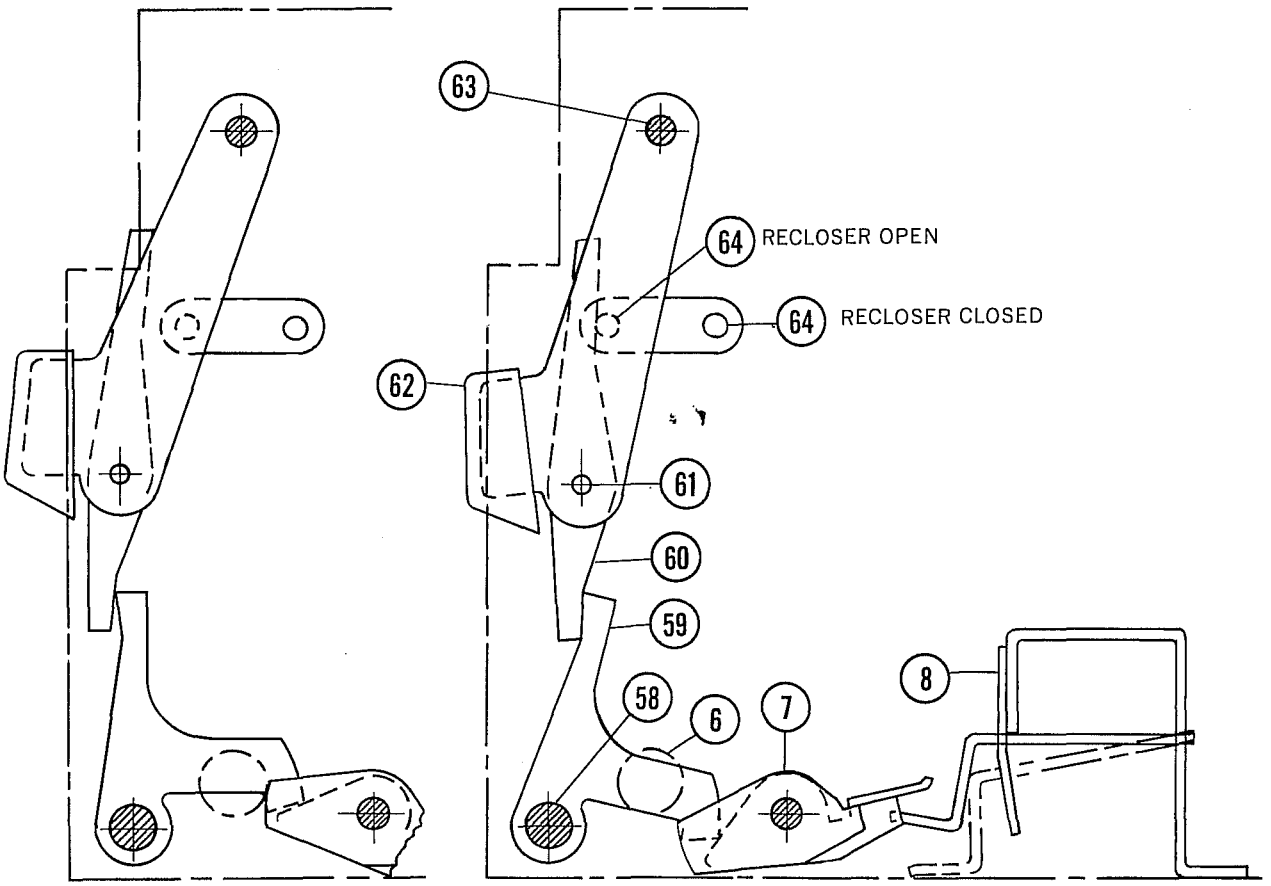

a) Close Bar (Normal Position) *b) Close Bar (Released Position)*

6. Stop Roller
7. Spring Release Latch
8. Spring Release Device *(IEEE Device 52/CC)*
58. Bell Crank Pivot Pin
59. Bell Crank Link
60. Spring Release Latch Link
61. Spring Release Latch Link Pin
62. "Push to Close" Bar
63. Close Bar Pivot Pin
64. "Open-Close" Indicator Pin

Fig. 23
Details of Close Interlock

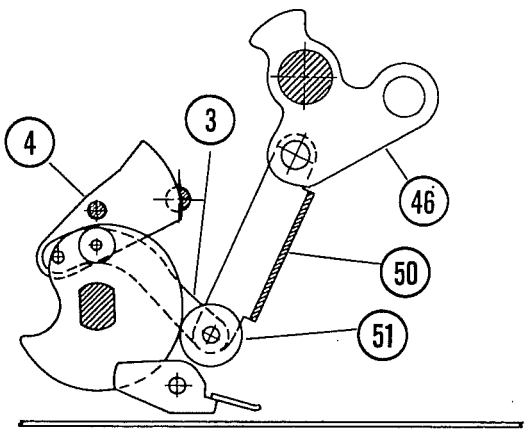

a) Mechanism Open—Springs Discharged (Trip Latch Not Reset)

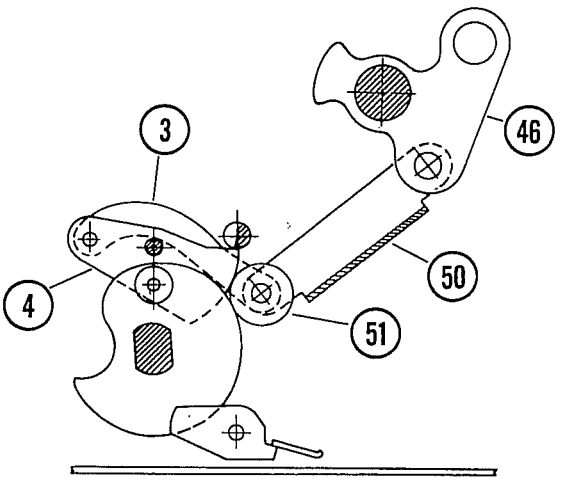

b) Mechanism Closed—Springs Discharged

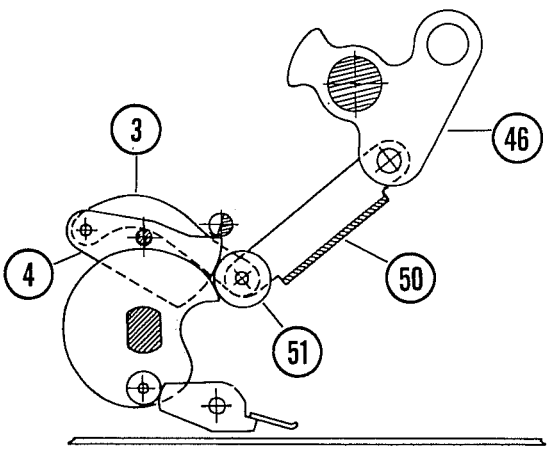

c) Mechanism Closed—Springs Charged

2. Trip Shaft
3. Trip Latch Constraining Link
4. Trip Latch
46. Mechanism Lever Assembly
50. Mechanism Link
51. Main Roller

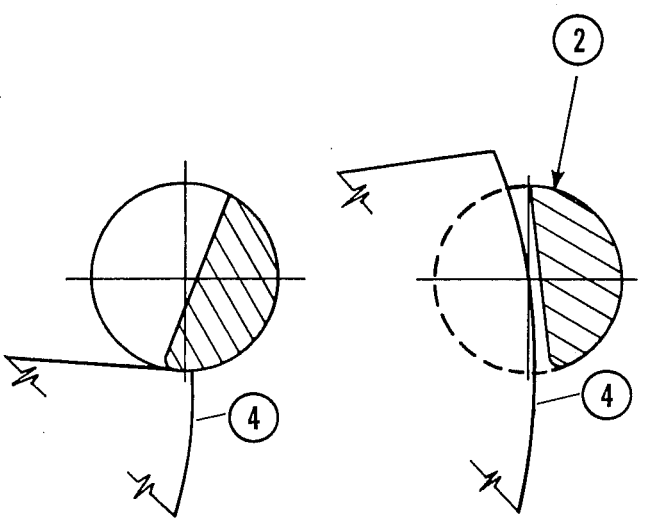

aa) Trip Latch Held *bb) Trip Latch Released*

d) Trip Shaft Latch Details

Fig. 24
Details of Linkages of Mechanism and Closing Spring Charge Condition

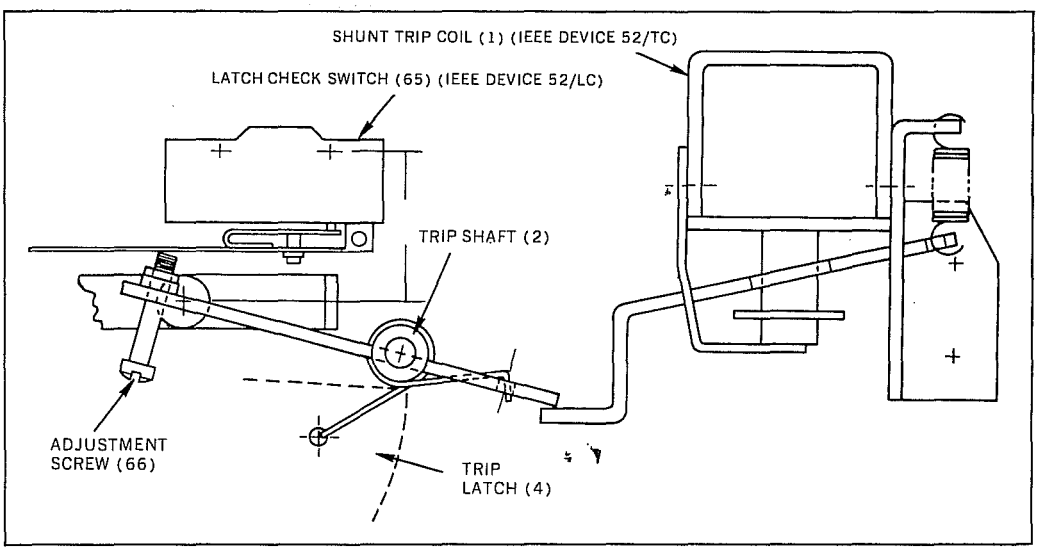

Fig. 25
Latch Check Switch (IEEE Device 52/LC)

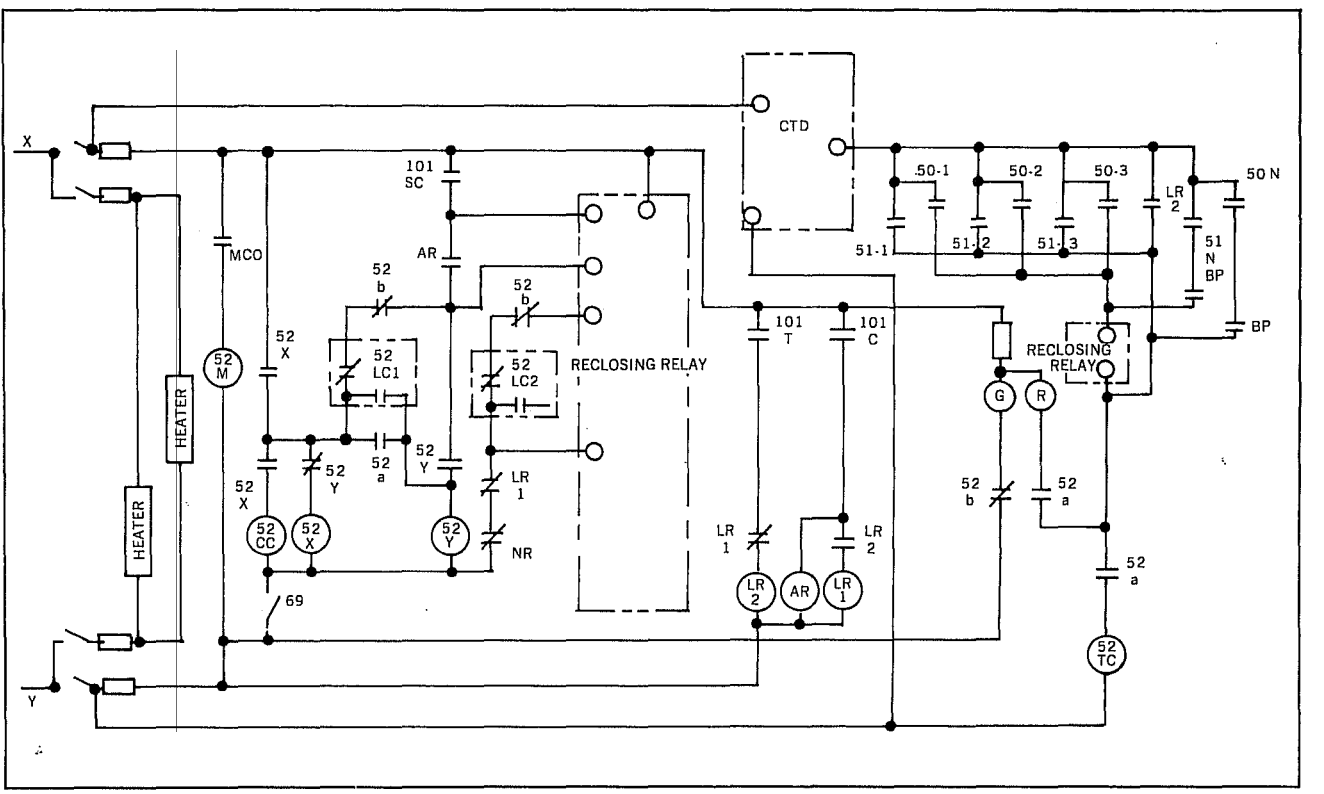

52X—Closing Relay
52Y—Anti-Pump Relay
52/M—Closing Motor
52/CC—Close Coil
52/TC—Trip Coil
101—Control Switch
NR—Non-Reclosing Switch
52/LC—Latch Check Switch
69—Lockout Switch
BP—By Pass Switch
MCO—Motor Cut Off Switch
LR—Latching Relay
AR—Auxiliary Relay
50-1,2,3—CO Relay Phase Instantaneous
51-1,2,3—CO Relay Phase Time Delay
50N—CO Relay Ground Instantaneous
51N—CO Relay Ground Time Delay
CTD—Capacitor Trip Device

Fig. 26
Typical Schematic Diagram—Relay-Controlled Recloser
(Consult diagram supplied with recloser for exact connections)

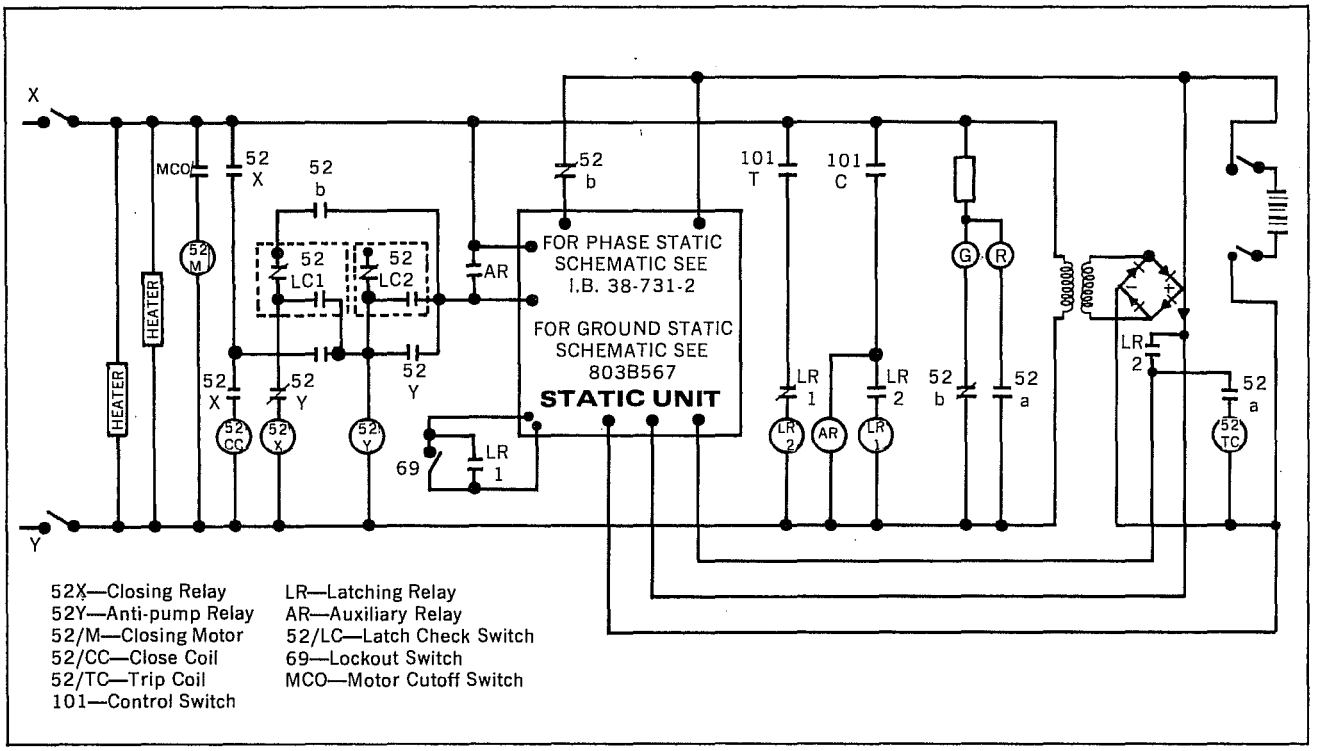

Fig. 27
Typical Schematic Diagram—Static-Controlled Recloser

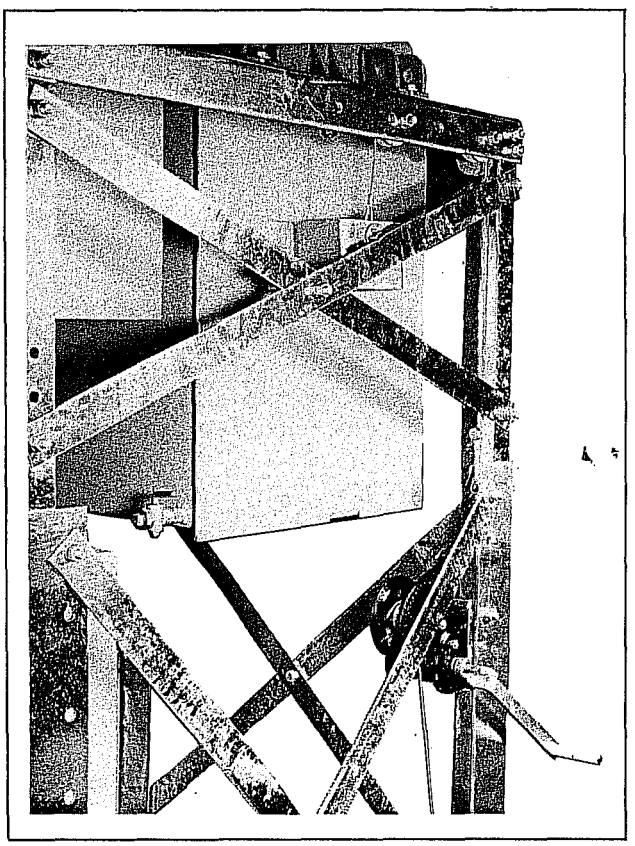

Fig. 28
Tank Lifter Windlass and Mounting Details —Type ES Recloser

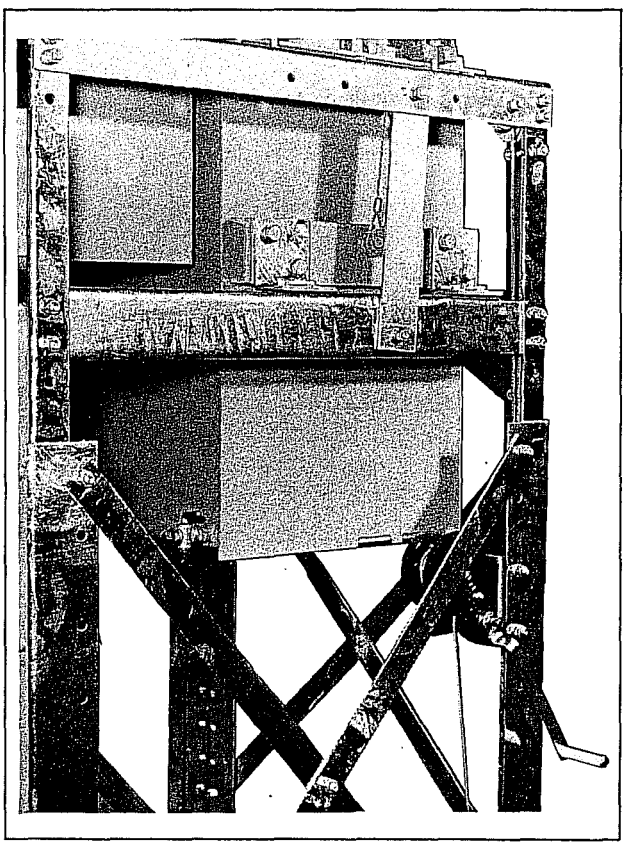

Fig. 29
Tank Lifter Windlass and Mounting Details —Type ESM Recloser

ITEM	QTY.	DWG. NO.	DESCRIPTION

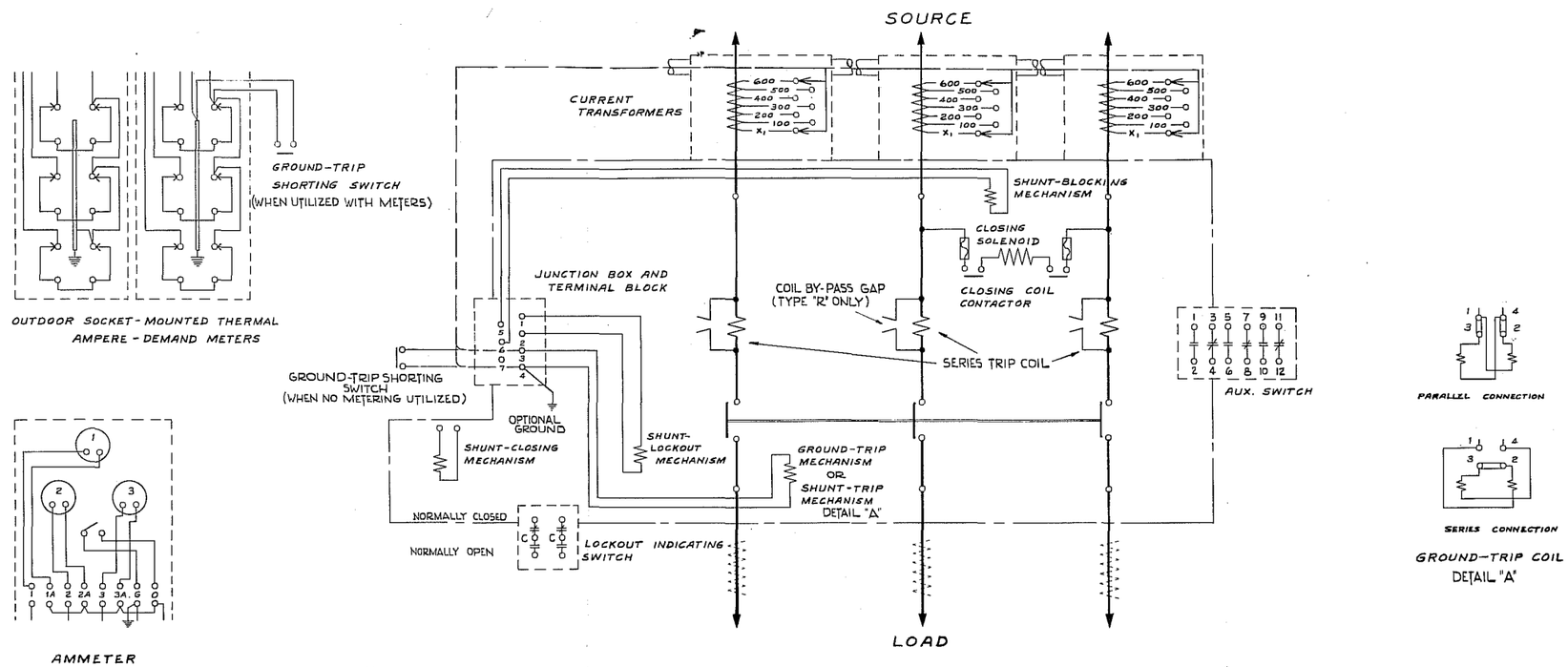

LOAD SIDE	SOURCE SIDE	CATALOG NUMBER	ACCESSORIES
		KTR280A4	CURRENT TRANSFORMER
			SHUNT-BLOCKING MECHANISM
		KA187R	JUNCTION BOX AND TERMINAL BLOCK
		KA369R33	AUXILIARY SWITCH
			SHUNT-TRIP MECHANISM
		KA486R3	SHUNT-CLOSING MECHANISM
		KA475R2	SHUNT-LOCKOUT MECHANISM
		KA296R	LOCKOUT INDICATING SWITCH
		KA370R811	GROUND-TRIP MECHANISM
		KA802TR200M10	CURRENT METERING
		KA813R	GROUND-TRIP SHORTING SWITCH
		KA416R	Brackets
		KA417R	Brackets
		KA414R	Tank lifting, windlass

CATALOG NUMBER	ACCESSORIES
KA810R	WIRING KIT
	STUD-TYPE TERMINAL
	MOUNTING FRAME
KA809R	TANK VALVE
	RECTIFIER
	DUAL RECLOSING TIME MECHANISM
	ASSEMBLY OF RECLOSERS AND EXTERNAL ACCESSORIES
KA812W1	- Conduit Kit

LINE MATERIAL SHOP ORDER NO. KL54580
CUSTOMER ORDER NO.
CATALOG NO. KWB140C133
SERIAL NO.

KYLE PRODUCTS PLANT

ASSEMBLY	B/M NO.	QTY/UNIT
MADE FOR		

E. C. NO	REV.	DATE	BY

LINE MATERIAL INDUSTRIES
McGRAW-EDISON COMPANY
MILWAUKEE, WIS., U. S. A.

WIRING DIAGRAM AND ACCESSORY ENUMERATION FOR "R" OR "W" RECLOSER

MATERIAL:
COATING:
TOLERANCE ON ALL DIMENSIONS UNLESS OTHERWISE NOTED
DR. O.J. CH. [illegible] APP.
DATE: 7-8-59
SCALE:
DATA-483D

DESIGN PRODUCTS CO.—1000H 500-10-58

NOTE:
SCHEMATIC FOR CT'S AMETERS, GROUND TRIP SOLENOID, AND GROUND TRIP SHORTING SWITCH ON CLM RECLOSER.

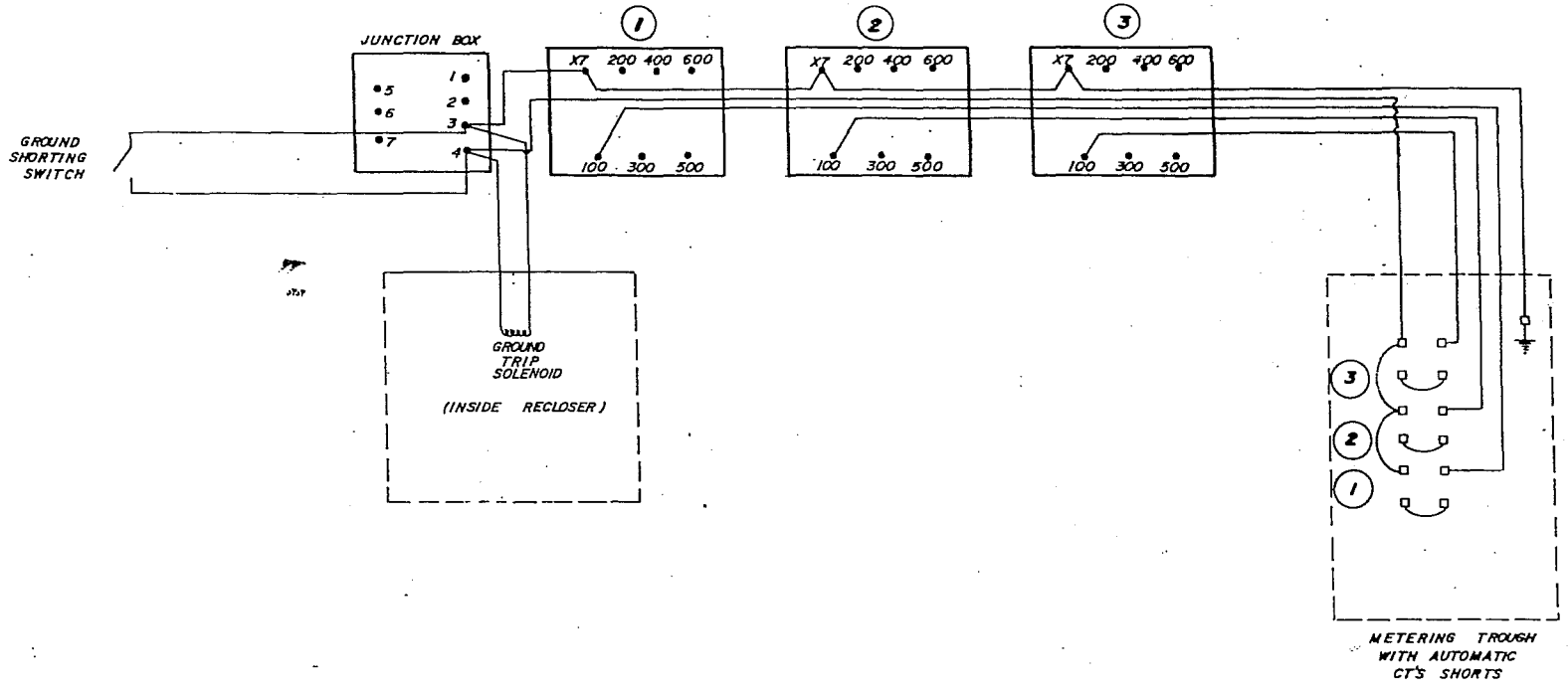

DATE	REVISIONS	BY

NEWFOUNDLAND LIGHT & POWER COMPANY LIMITED

SCALES :	RECLOSERS	DATE: OCT. 24/75
DRAWN: R BUDGELL	AC SCHEMATIC FOR C.T CONNECTION	DWG. No.
APPROVED:	ON Mc GRAW EDISON RECLOSERS	0-900-17-8

COOPER Power Systems

Reclosers

Service Information

Type H SinglePhase Maintenance Instructions

S280-10-1

Replaces 280-10B-1 dated 3/63
No change in text

14.4 kv • 5 thru 50 Amperes

INDEX

	Page
DESCRIPTION	1
SAFETY FOR LIFE	2
DESCRIPTION (Continued)	4
PERIODIC INSPECTION AND MAINTENANCE	4
Oil Specifications	5
Tools	5
GENERAL REPAIRS AND MAINTENANCE	5
Arc Interrupting Structure	5
Solenoid Coil	7
Solenoid Frame and Hydraulic Mechanism	9
Changing Operating Chacteristics	11
Solenoid Frame Reassembly	12
Insulating Support Stringers	15
Bushings	16
Head Assembly	18
Tank and Liner	21
Suggested List of Spare Parts	21

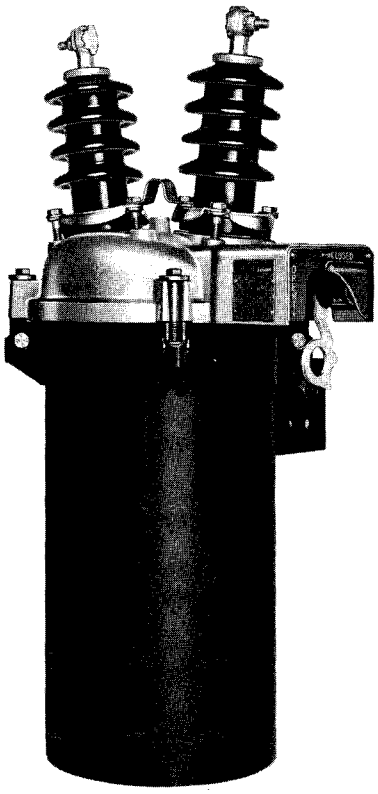

FIGURE 1

CAUTION: DO NOT ENERGIZE THIS EQUIPMENT OUT OF OIL

DESCRIPTION

A Type H recloser is a self-contained device that senses and interrupts single-phase fault currents on a distribution circuit. The recloser automatically closes to restore service if the fault is temporary and then resets for another series of operations. If the fault is permanent, the recloser locks open after two, three or four operations, depending upon its setting.

Operating sequences of the recloser can be all fast, all delayed, or a combination of fast and delayed. When a combination sequence is used, fast operations always precede delayed operations. On coordinated systems, fast recloser operations are used to clear temporary faults before branch-line fuses are damaged. Subsequent time-delay openings allow fault currents to flow long enough to be cleared by branch-line fuses. Thus, outages caused by permanent faults are confined to shorter sections of line.

These instructions do not claim to cover all details or variations in the equipment, procedure, or process described, nor to provide directions for meeting every possible contingency during installation, operation, or maintenance. When additional information is desired to satisfy a problem not covered sufficiently for the user's purpose, please contact your McGraw-Edison Power Systems sales engineer.

SAFETY FOR LIFE

Cooper Power Systems products meet or exceed all applicable industry standards relating to product safety. We actively promote safe practices in the use and maintenance of our products through our service literature, instructional training programs, and the continuous efforts of all Cooper Power Systems employees involved in product design, manufacture, marketing, and service.

We strongly urge that you always follow all locally approved safety procedures and safety instructions when working around high voltage lines and equipment and support our “Safety For Life” mission.

SAFETY INFORMATION

The instructions in this manual are not intended as a substitute for proper training or adequate experience in the safe operation of the equipment described. Only competent technicians, who are familiar with this equipment should install, operate, and service it.

A competent technician has these qualifications:

- Is thoroughly familiar with these instructions.
- Is trained in industry-accepted high- and low-voltage safe operating practices and procedures.
- Is trained and authorized to energize, de-energize, clear, and ground power distribution equipment.
- Is trained in the care and use of protective equipment such as flash clothing, safety glasses, face shield, hard hat, rubber gloves, hotstick, etc.

Following is important safety information. For safe installation and operation of this equipment, be sure to read and understand all cautions and warnings.

Hazard Statement Definitions

This manual may contain four types of hazard statements:

DANGER: Indicates an imminently hazardous situation which, if not avoided, will result in death or serious injury.

WARNING: Indicates a potentially hazardous situation which, if not avoided, could result in death or serious injury.

CAUTION: Indicates a potentially hazardous situation which, if not avoided, may result in minor or moderate injury.

CAUTION: Indicates a potentially hazardous situation which, if not avoided, may result in equipment damage only.

Safety Instructions

Following are general caution and warning statements that apply to this equipment. Additional statements, related to specific tasks and procedures, are located throughout the manual.

DANGER: Hazardous voltage. Contact with high voltage will cause death or severe personal injury. Follow all locally approved safety procedures when working around high and low voltage lines and equipment. G103.2

WARNING: Before installing, operating, maintaining, or testing this equipment, carefully read and understand the contents of this manual. Improper operation, handling or maintenance can result in death, severe personal injury, and equipment damage. G101.0

WARNING: This equipment is not intended to protect human life. Follow all locally approved procedures and safety practices when installing or operating this equipment. Failure to comply may result in death, severe personal injury and equipment damage. G102.1

WARNING: Power distribution equipment must be selected for the intended application. It must be installed and serviced by competent personnel who have been trained and understand proper safety procedures. These instructions are written for such personnel and are not a substitute for adequate training and experience in safety procedures. Failure to properly select, install or maintain this equipment can result in death, severe personal injury, and equipment damage. G122.2

UNIVERSAL CLAMP-TYPE TERMINALS
accept copper or aluminum conductors No. 8 solid through 2/0 stranded.

COVER-CLAMPED 15-KV BUSHINGS
can be easily replaced without dismantling recloser.

LIFTING STRAP
used for hoisting recloser or taking mechanism out of tank.

INSULATING STRINGERS
support and insulate operating mechanism.

HYDRAULIC MECHANISM
counts operations to lockout, and introduces controlled time-delay tripping.

CONTACT TOGGLE MECHANISM
minimizes arcing on opening and closing by providing a rapid snap action.

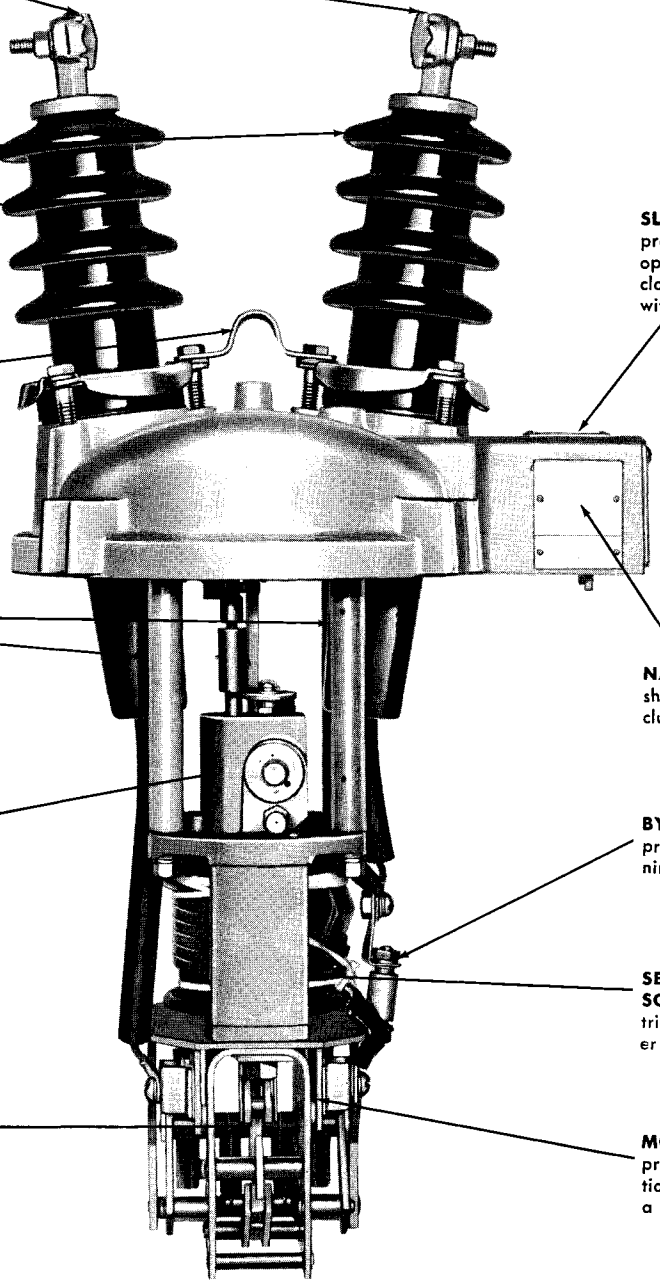

SLEET HOOD
protects manual control lever, operation counter, and non-reclosing lever; allows easy access with switch stick.

NAMEPLATES
show complete recloser data including operating sequence.

BY-PASS GAP
protects solenoid coil from lightning surges.

SERIES-TRIP SOLENOID
trips recloser when current greater than minimum trip value flows.

MOVING CONTACTS
provide double break interruptions; are self-cleaning through a wiping action.

DESCRIPTION — cont'd

Type H reclosers are widely applied to increase service continuity, reduce operating costs and increase revenue. They can perform at peak efficiency, providing reliable circuit protection, if adequate maintenance is performed. Maintenance is relatively easy and inexpensive.

Arc interruption inherently results in the reduction of some oil, which is a complex hydrocarbon, into various chemical compounds, free carbon and gases. Addition of these chemical compounds to the oil has several adverse effects:

1. Oil dielectric strength is reduced.
2. Water-absorbing particles are formed.
3. Under extreme conditions, recloser timing may be erratic.

For these reasons, oil must be replaced periodically.

Filtering of oil may remove absorbed and free water in addition to some other contaminants. The dielectric strength sometimes can be raised to acceptable levels by this method. Filtering, however, does not always remove water-absorbing contaminants and the oil's dielectric strength may fall rapidly after being returned to service.

Therefore, a recloser undergoing periodic maintenance should be filled with new oil or oil that has been restored to like new condition.

Frequency of maintenance depends upon local climatic conditions and the interrupting duty imposed upon the equipment. M-E recommends units be completely inspected and cleaned at least once each year. Oil should be replaced under any of the following conditions:

1. When contaminated with sludge or carbon.
2. When dielectric strength has decreased to 18 kv or lower.
3. When the equivalent of a duty cycle has been completed.

The NEMA standard duty cycle for distribution class reclosers is as follows:

Percent of Rated Interrupting Current	No. of Operations	Circuit X/R Value
15- 20	40	2
45- 55	40	4
90-100	20	8
	100	

PERIODIC INSPECTION AND MAINTENANCE

Each periodic check should include at least the following steps: (Detailed disassembly instructions are given under GENERAL REPAIRS AND MAINTENANCE.)

1. Remove recloser from service and replace with a spare or a fuse.
2. Inspect external components. Check for broken bushings, paint scratches, or other mechanical damage. Note counter reading and enter in the recloser record. Move manual control lever up and down to see if counter is functioning properly and leave in tripped position.
3. Loosen bolts that secure head casting and remove mechanism from tank. If tank and head do not separate readily, break gasket seal by prying them apart. Allow oil to drain off mechanism. Repair work will be simplified if the work bench is arranged so the mechanism can be placed in an inverted position.
4. Inspect contacts and interrupting structure. Replace moving and stationary contacts if they are severely eroded.
5. Clean all internal components. Remove all carbon traces by wiping with a clean, lint-free cloth. Pay particular attention to insulating members. Flush the mechanism with clean, dry transformer oil.

   Caution: Never use volatile solutions, detergents, or water-soluble cleaners.

   Check condition of solid insulating members with an M-E Type TE tester.
6. Examine head gasket. Replace O-ring gasket if it has taken a permanent set. Always replace flat CORPRENE gasket, furnished on older reclosers.
7. Inspect tank liners. Soft or spongy areas indicate water has been absorbed. Replace liners if these areas are present. Remove any carbon or sludge from tank.
8. Fill the tank with oil. An orange line inside tank shows proper oil height with mechanism removed. Capacity is approximately four gallons. Use only new transformer oil which possesses the following properties:

Color: nearly colorless	
by Union colorimeter	2.0 max.
by ASTM colorimeter	1.0 max.
Reaction	neutral
Neutralization number	0.03 mg KOH/g max.
Free sulphur	none
Steam emulsion number	25 sec. max.
Flash point	145°C min. (293°F)
Fire point	160°C min. (320°F)
Pour point	−45.6°C max. (−50°F)
Viscosity:	
at 37.8°C (100°F) Saybolt Universal	62 sec. max.
at 0°C (32°F) Saybolt Universal	320 sec. max.
Specific gravity: at 29.9°C (86.0°F)	.895 max.
Co-efficient of expansion:	
at 0°C (32°M)	0.000725
at 100°C (212°F)	0.000755
Interfacial tension	40 dynes/cm min.
Dielectric constant	2.2
Dielectric strength	26,000 volts min.
Weight per gallon	7.5 lbs.

9. Replace mechanism in tank. Reposition head bolts and tighten evenly. Operate the recloser manually about eight times to expel all air from the hydraulic system.

10. Check for proper operation. Allow a few minutes for trip piston to fully reset after expelling air. Manually open and close contacts by means of the manual control lever until recloser locks open. The number of contact openings should correspond with number of operations indicated on recloser nameplate. When lockout is reached, unlatching of the lockout mechanism can be heard and, for a short period of time, the manual control lever cannot be latched in the closed position.

    Fast and delayed operations can also be checked. During a fast operation the contacts will snap open shortly after the manual control lever is pulled down. For delayed operations there will be a longer interval after the lever is pulled down before the contacts snap open. The number of fast and delayed operations should agree with the nameplate data.

11. Direct current testing can also be employed to verify its electrical as well as its hydraulic operation. For this test, connect a number of six-volt storage batteries in series in accordance with the following table. For a series connection, each battery is connected from positive (+) to negative (−).

Coil Rating, Amperes	No. of 6-Volt Batteries (Series)	Cable Size AWG
5	6	Short Lengths of No. 6 to 250 MCM
10	3	
15	2	
25	2	
35	2	
50	2	

    a. Push yellow control lever up to the CLOSED position and wait about three minutes for the trip piston to fully settle.

    b. Momentarily connect bushing terminals to the series output of the batteries for each tripping operation. Count the operations to lockout. If correct number of operations did not occur wait five minutes and repeat test. Air in the hydraulic system can often cause incorrect operation.

GENERAL REPAIRS AND MAINTENANCE

Operations described in this section should be performed under the cleanest conditions possible. Move manual control lever to OPEN position and remove the recloser mechanism from the tank as described on page 4.

ARC-INTERRUPTING STRUCTURE

Fault current is interrupted in minimum time by the arc-

ARC INTERRUPTING STRUCTURE — cont'd

interrupting structure. Circuit opening is provided by a double, spring-loaded, moving contact assembly.

Inspect contact assembly and be sure contacts completely close.

A. If contacts are rough and carbonized, they should be cleaned as follows:

1. Disconnect two leads from the arc-interrupting structure.
2. Remove the two screws from arc shield and swing shield upward. See figure 3.
3. Take off both arc deflectors as shown in figure 3.

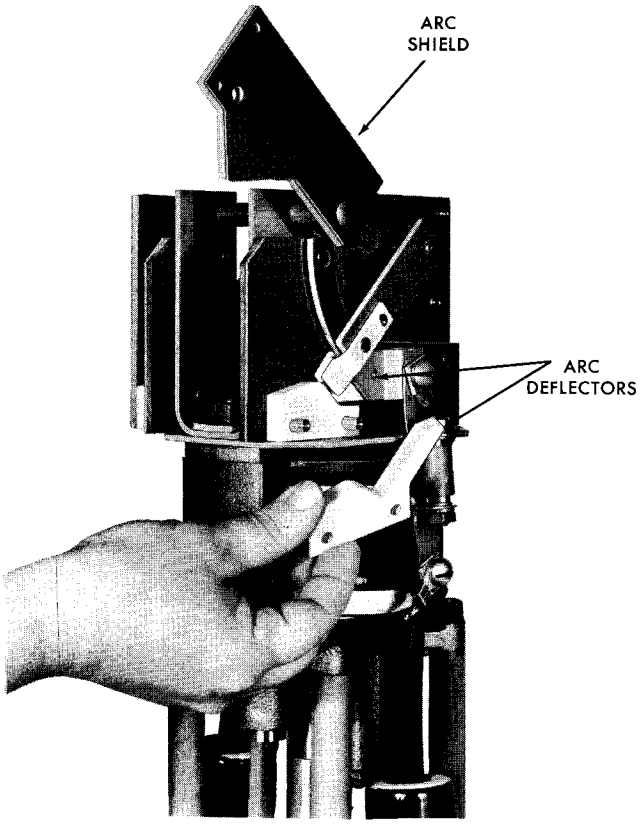

FIGURE 3

4. Lift movable contact and clean both contacts with crocus cloth. See figure 4.
5. Reassemble arc-interrupting structure by reversing above procedure.

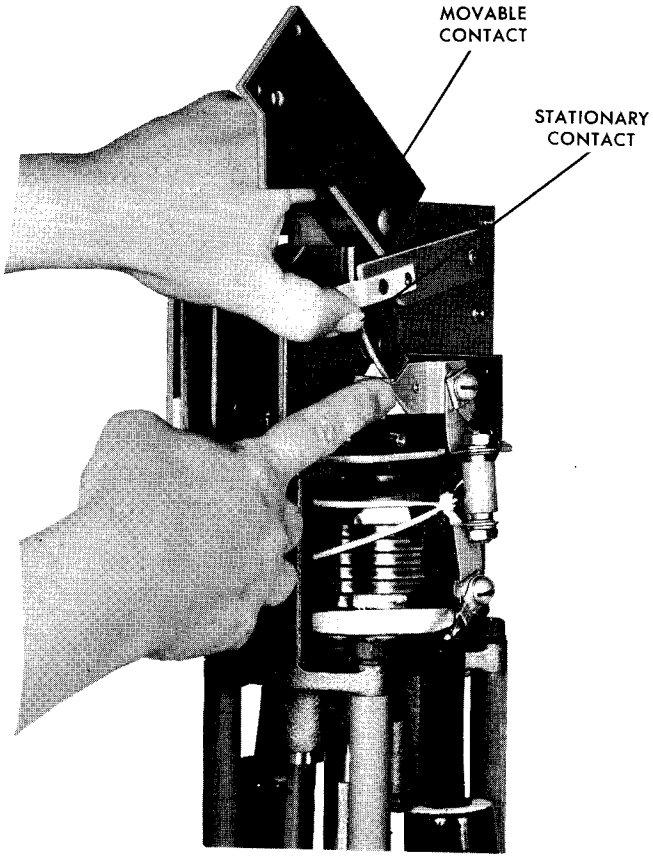

FIGURE 4

6. Clean other set of contacts in same manner.

B. If contacts are badly burned or do not close completely, the arc-interrupting structure should be replaced as follows:

1. Disconnect two leads from the arc-interrupting structure.
2. Remove the two hex nuts and washers that hold the interrupting structure in place.
3. Lift off interrupting structure. Note proper orientation of interrupting structure with respect to pump piston.
4. Install new unit in same position by reversing above procedure. Be sure interrupting structure is oriented as shown in figure 3.

If further maintenance is to be performed at this time, do not reinstall the arc-interrupting structure.

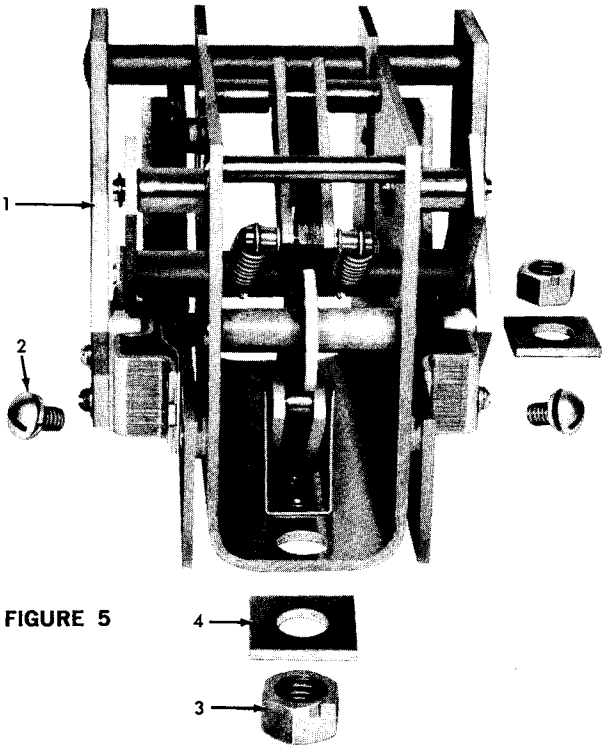

FIGURE 5

PARTS LIST
ARC-INTERRUPTING STRUCTURE

Item No.	Description	Catalog No. (all serial numbers)	No. Used Per Recloser
1	Arc-interrupting structure	KA732H	1
2	Preassembled brz lock washer and rd hd scr 5/16"—18 x 1/2"	KP103	2
3	Lock nut 1/2"	KP284	2
4	Fiber mounting washer	KP282H	2

SOLENOID COIL

Electrical operation is accomplished by the series-trip solenoid whose coil is connected in series with the line and protected by an air bypass gap. When fault current approaches twice normal line current, the increased magnetic field pulls a plunger down into the coil. As the plunger moves downward, it trips open the recloser contacts.

Type H reclosers are constructed so that solenoid coils of different ampere ratings are interchangeable.

Caution: Maximum thermal rating of H reclosers is 50 amperes; therefore, do not install coils rated 70- or 100-amperes.

Change coils in the following way:

1. Remove arc-interrupting structure as described on page 6.
2. Mark bridge plate and solenoid frame with chalk or file to identify the correct orientation of the parts with respect to one another. No dowel pins were used between bridge plate and solenoid frame from serial nos. 169460 thru 178980.
3. Lift off coil shield, bridge, and lower solenoid gasket as shown in figure 6.

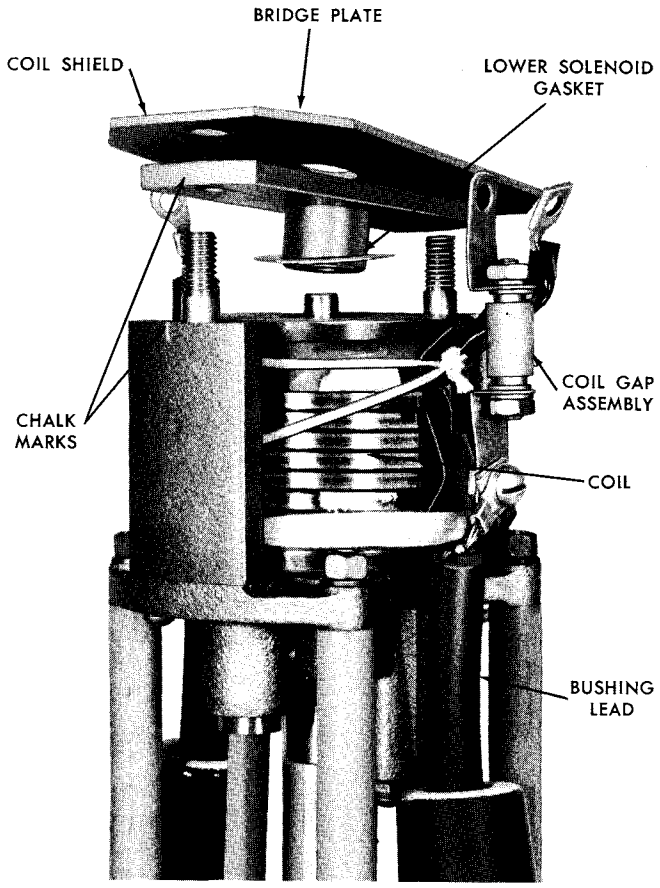

FIGURE 6

4. Disconnect bushing lead and coil gap assembly identified in figure 6.
5. Remove solenoid coil.

SOLENOID COIL — cont'd

6. Remove upper solenoid gasket and impact washer as shown in figure 7. Whenever the coil is removed, upper and lower solenoid gaskets must be replaced to maintain proper timing characteristics.

7. Figure 8 illustrates the manner in which various sizes of solenoid coils are identified. A new coil data plate for mounting on the recloser sleet hood is included with each coil order.

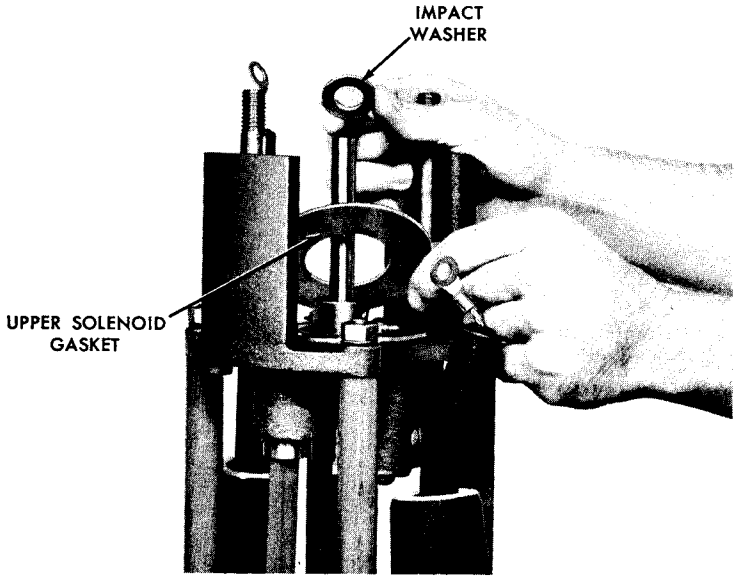

FIGURE 7

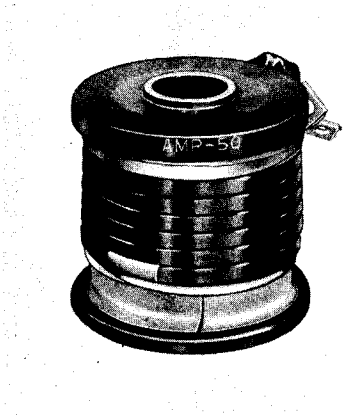

FIGURE 8

8. Replace solenoid coil with one of desired rating by reversing above procedure. Be certain that coil leads are on the same side as manual control lever and that the bridge plate and solenoid frame are properly oriented. If bridge plate was not marked prior to disassembly, mount it first in one position and then the other. Correct orientation will be the position in which the plunger operates the easiest.

If further maintenance is to be performed at this time, do not reinstall solenoid coil.

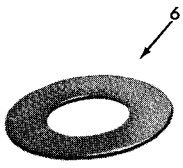

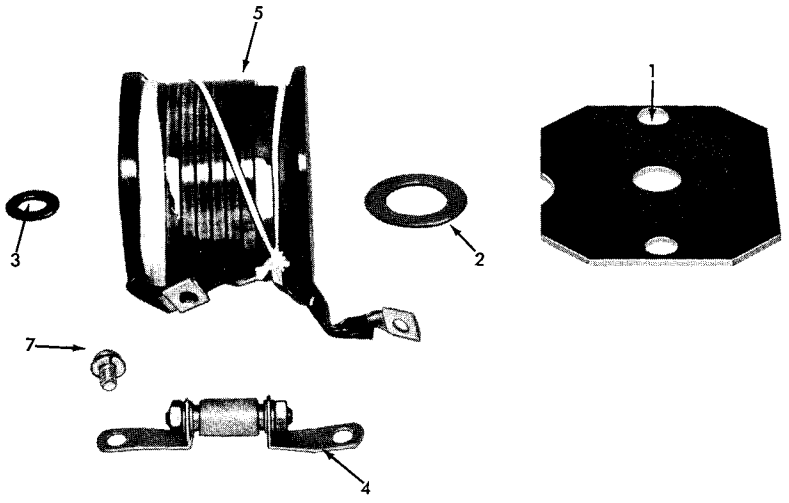

PARTS LIST
SOLENOID COIL

Item No.	Description	Catalog No. (all serial numbers)	No. Used Per Recloser
1	Coil shield	KP92H	1
2	Lower solenoid gasket	KP103H	1
3	Impact washer	KP37H	1
4	Coil gap assem	KA100H	1
5	Solenoid coil, specify amperes	KA24H	1
6	Upper solenoid gasket	KP52H	1
7	Preassembled brz lock washer and rd hd scr 5/16"—18 x 1/2"	KP103	2

SOLENOID FRAME AND HYDRAULIC MECHANISM

Insulating oil of the recloser is used by the hydraulic mechanism to provide time-controlled tripping and to count operations to lockout. Components function as follows for a normal sequence of two fast and two delayed operations.

First operation — As the plunger is drawn down by the solenoid coil, the lower end trips the contact assembly to open the contacts. At the same time, the plunger displaces oil which raises the slide valve and escapes through a port above the trip piston, Figure 10. Also, the pump piston, connected to the plunger by a lever arrangement, moves downward and forces a charge of oil under the trip piston. Quantity of oil in the charge is regulated by position of pump piston's shell. This charge displaces the trip piston a measured amount and is retained in the trip piston cylinder by a ball check valve.

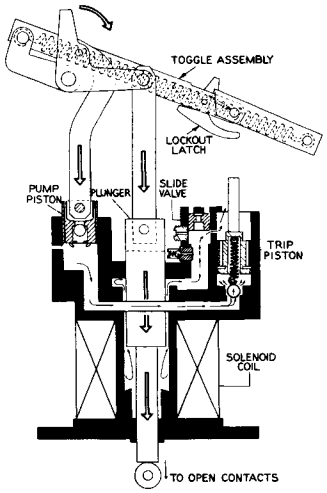

FIGURE 10

Magnetic force of coil pulls plunger down.

Opening of the contacts breaks the circuit and de-energizes the solenoid coil. Contact operating springs force the plunger back to its normal position. As the plunger moves upward, figure 11, oil in the slide valve cylinder returns to the plunger cylinder. The slide valve moves down and blocks the escape port to the trip piston cylinder. Thereafter, oil flows slowly through the small port in the slide valve. This slow flow retards the plunger's return to its normal position and causes the closing of the contacts to be delayed about one second.

Second operation— If fault still exists after contacts close, the recloser cycles again. The second operation is similar to the first operation, except trip piston is moved higher in its cylinder where it blocks the escape port from the slide valve cylinder.

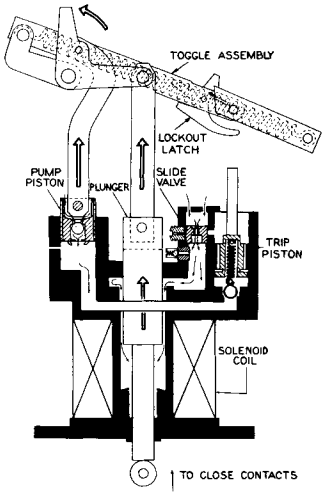

FIGURE 11

Plunger returns to normal position.

Third operation — During this operation, figure 12, the plunger's movement down into coil is impeded by oil. Oil displaced by plunger raises slide valve but can no longer flow through escape port because trip piston is covering it. Therefore, the oil must flow around plunger or through timing orifice in slide valve cylinder. If the fault current is high, enough pressure will be developed in the slide valve cylinder to open the spring-loaded control valve. This provides an additional outlet for the oil. Thus, release of oil in the plunger cylinder is governed by (1) leakage, (2) timing orifice size, and (3) the control valve.

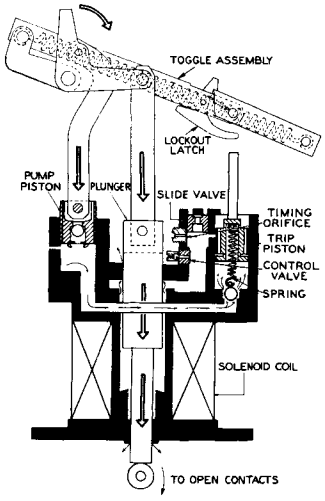

FIGURE 12

Magnetic force pulls plunger down for third operation which is retarded by blocked escape port.

SOLENOID FRAME AND HYDRAULIC MECHANISM — cont'd

As plunger moves downward, the pump piston forces the third charge of oil under trip piston, raising it still higher in its cylinder.

Fourth operation— If fault still persists after first three operations, the recloser opens again. Fourth operation is a delayed operation similar to the third. However, the fourth charge of oil forces trip piston the remaining distance required to strike the lockout latch, figure 13. This latch releases the toggle assembly and the contacts are held open until recloser is reset manually. During lockout the trip piston, aided by its spring, settles to the bottom of its cylinder and recloser is ready to perform four operations as soon as contacts are closed.

FIGURE 13

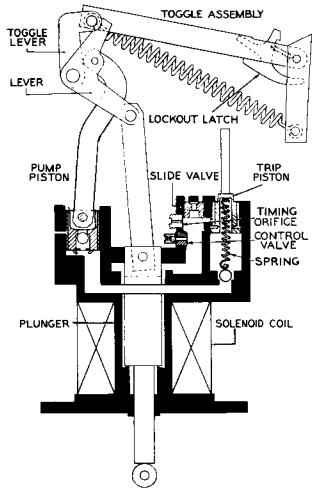

Fourth operation causes lockout as trip piston strikes lockout latch.

If a temporary fault clears before lockout, all mechanical operations cease after the contacts have closed. The trip piston settles to the bottom of its cylinder and recloser is ready to perform four operations when another fault occurs. Settling of the trip piston enables recloser to "forget" that a temporary fault occurred.

Normally, no maintenance will be required on the pump piston assembly, slide valve, trip piston assembly, or trip piston ball check valve. The following procedure may be used to remove these parts for inspection, replacement, or to change the operating sequence.

1. Remove solenoid coil as described on page 7.
2. Remove four hex head nuts and lock washers from support stringers.
3. Lift complete solenoid frame and mechanism off support stringers. However, raise the frame slowly because the plunger and pump piston will be withdrawn from their cylinders. Be careful to keep them from falling and being damaged. Figure 14 illustrates a convenient method of removing the solenoid frame.

NOTE: One stringer has been removed for clarity.

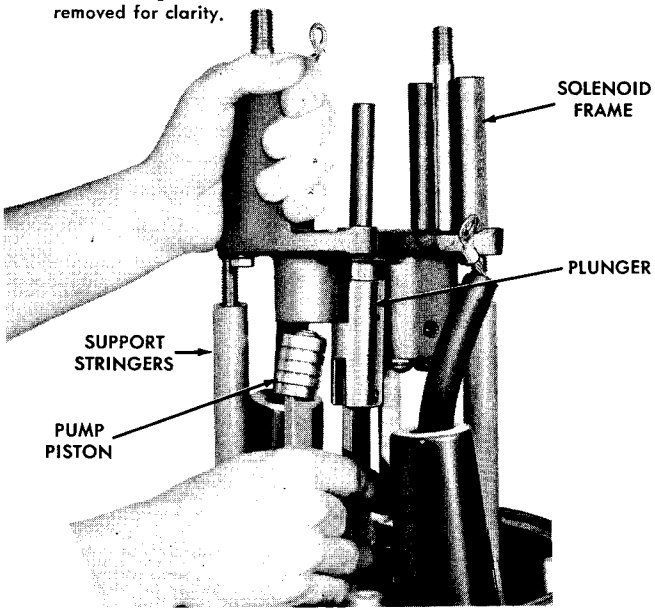

FIGURE 14

4. Disassemble slide valve by removing the two screws and lock washers, slide valve stop, and fiber plate as illustrated in figure 15. Tip up frame and remove slide valve.

   Note: Bottom of slide valve is ground to match seat, and top of slide valve has a recess.

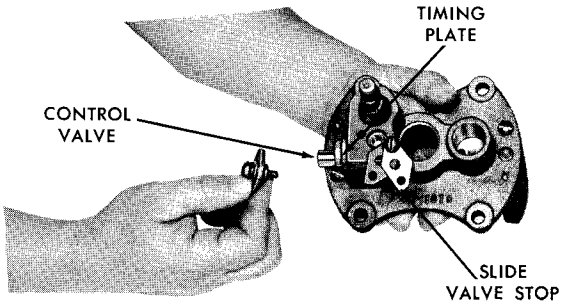

FIGURE 15

5. Unscrew from frame, timing plate secured with capscrew or orifice plug and control valve assembly, identified in figure 15.
6. To remove the trip piston assembly, pull check-valve ball seat out from underside of solenoid frame and unhook the spring which is part of the trip piston assembly as follows:
   a. Using a wire hook, raise check valve ball seat to expose spring. Insert a thin plate through the spring so spring tension on pin in ball seat will be released. See figure 16.
   b. Push ball seat pin out to disengage spring. See figure 17.

      Note: Steel ball inside ball seat is free to drop out. Handle carefully to prevent nicking.

   c. Withdraw thin plate from spring and remove trip piston.
7. Clean all parts of the hydraulic mechanism and solenoid frame carefully before reassembly.

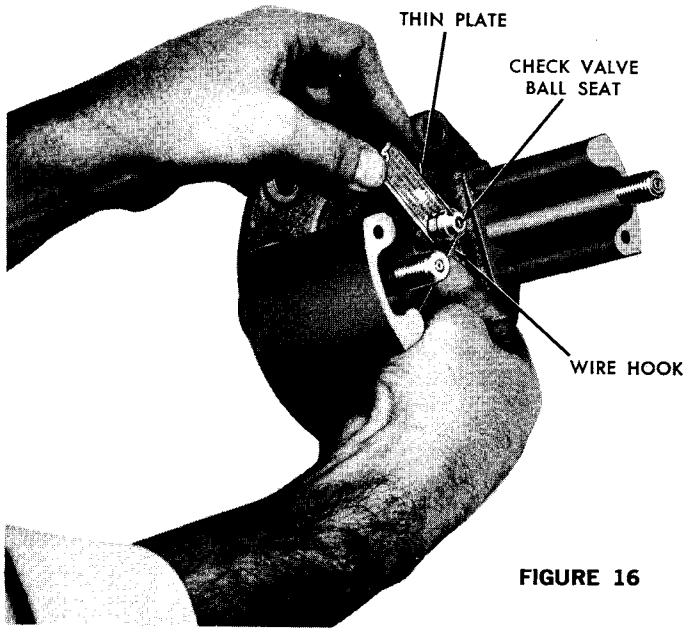

FIGURE 16

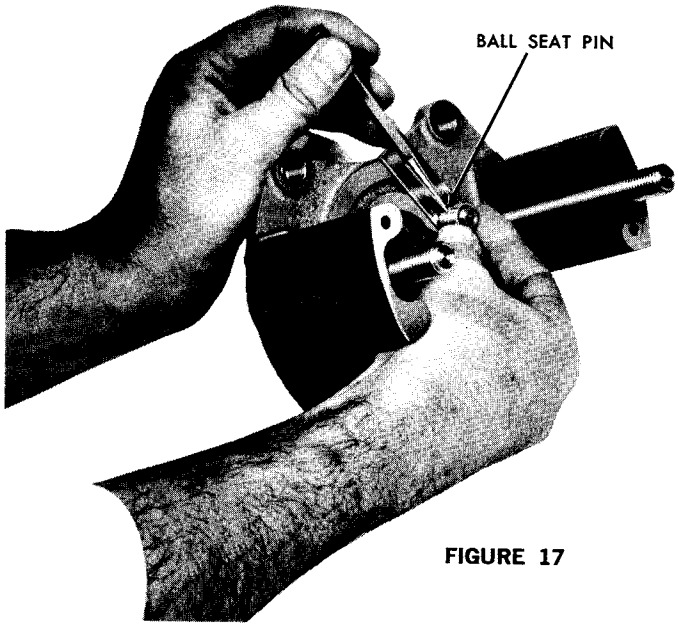

FIGURE 17

CHANGING OPERATING CHARACTERISTICS

Type H reclosers with serial numbers prior to 169460 require an exchange of parts as listed in Table I to obtain desired operating characteristics. Reclosers with subsequent serial numbers can be simply adjusted to provide the characteristics required for desired operation.

To make the adjustments on these later reclosers, refer to figure 18. Provision is made for selection of an A characteristic with no intentional time delay, a retarded B characteristic and an extra retarded C characteristic.

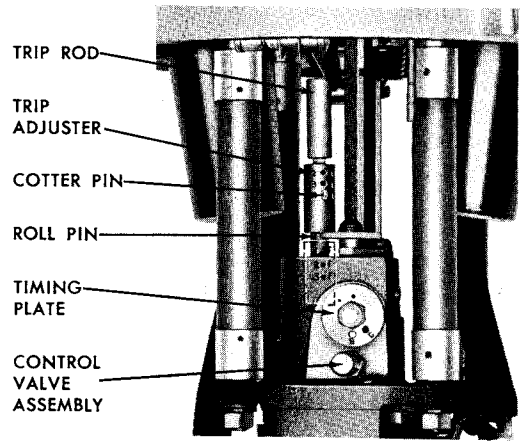

FIGURE 18

CHANGING OPERATING CHARACTERISTICS — cont'd

Choice of the B or C characteristic is made by positioning the timing plate. A timing plate and gasket replacement will permit four operations of the A characteristic. Choice of one operation to lockout is made by pulling down the non-reclosing handle, an accessory located under the sleethood.

Two, three or four operations to lockout are selected by repositioning the cotter pin and trip rod on the trip adjuster.

Selection of the number of fast operations is made by properly locating the roll pin at the bottom of the trip adjuster. The trip adjuster should be backed by a solid metal object when the roll pin is being driven out.

To obtain a sequence of retarded only, or extra-retarded, only characteristics, unscrew timing plate capscrew and replace timing plate in groove-pin to a B or C position. B position provides retarded operations, and C position will give extra-retarded operations. Remove old slide valve and replace with new slide valve that includes a special timing orifice, and add spacer. Change lockout setting to number of retarded operations desired. Whenever all retarded or extra-retarded operations are wanted, the bottom sequence selector should be set for 3F or three fast operations with proper placement of roll pin.

TABLE I
EXCHANGE OF HYDRAULIC MECHANISM COMPONENTS FOR CHANGING OPERATING SEQUENCE BELOW SERIAL NO. 169460

NO. OF OPERATIONS			TRIP PISTON AND ROD ASSEMBLY			SLIDE VALVE	SLIDE VALVE STOP	FIBER PLATE	TIMING ORIFICE	TRIP PISTON LIFT
Fast (Curve A)	Retarded (Curve B)	Extra Retarded (Curve C)	Serial No. H48803 and Below	Serial No. H48804 Thru H58254	Serial No. H58255 and Above	All Serial Numbers Below 169460				
4			KA58H	KA89H11	KA89H12	KP41H	KP117H	KP32H	omit	omit
	4		KA58H	KA89H11	KA89H12	KP233H	KP117H	KP32H	omit	omit
		4	KA58H	KA89H11	KA89H12	KP41H	KP117H	KP32H	KP186H	KP162H
2	2		KA58H*	KA89H11	KA89H12	KP41H	KP117H	KP32H	KP186H	omit
2		2	KA58H*	KA89H11	KA89H12	KP41H	KP117H	KP32H	KP228H	omit
1	3		KA183H†	KA184H	KA115H	KP41H	KP264H	KP265H	KP186H	KP254H
1		3	KA183H†	KA184H	KA115H	KP41H	KP264H	KP265H	KP228H	KP254H
1	2		KA58H	KA89H11	KA89H12	KP41H	KP117H	KP32H	KP186H	KP216H
1		2	KA58H	KA89H11	KA89H12	KP41H	KP117H	KP32H	KP228H	KP216H

* If original toggle has been replaced with a KA803H11 toggle, use trip piston and rod assembly KA112H.
† Original toggle must be replaced with a KA803H11 toggle.

SOLENOID FRAME REASSEMBLY

a. Insert trip piston in its cylinder.
b. Pull down spring using a wire hook and insert thin plate to hold spring, as shown in figure 19.
c. Put ball in check valve and pin check valve assembly to spring.
d. Remove thin plate and seat check valve assembly in frame.
e. Insert slide valve, and spring if provided, in its cylinder.
f. Reinstall fiber plate, slide valve stop, and screws and lock washers. When no indexing marks are present, be sure holes in fiber

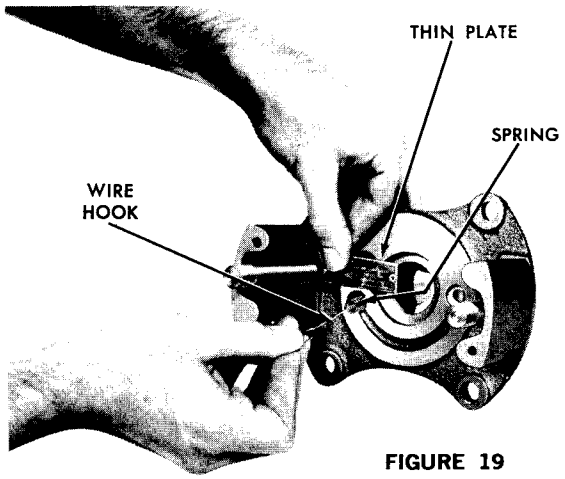

FIGURE 19

plate and slide valve stop are aligned and centered over slide valve cylinder.

Note: Slide valve stop also serves as trip piston stop.

g. Replace timing orifice plug or timing plate and control valve assembly.

h. Mark data plate with correct information if the operation sequence has been changed.

Test check valve in base of pump piston. Hold piston upside down and fill it with de-greasing fluid or transformer oil. If the valve does not hold, clean it thoroughly in de-greasing fluid and repeat test. If the valve still does not hold, replace the entire pump piston assembly as follows:

a. Unscrew pump piston shell far enough to expose steel pin.

b. Push out steel pin as shown in figure 20.

c. Remove piston from link assembly.

d. Install new piston by reversing above procedure.

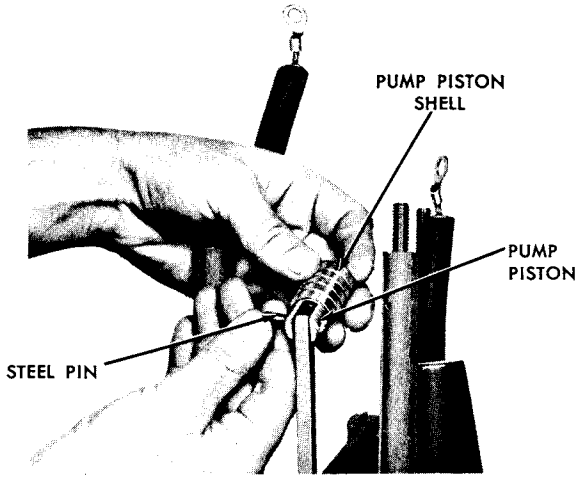

FIGURE 20

e. Position pump piston shell as described below.

If further maintenance is to be performed at this time, do not reinstall the solenoid frame mechanism.

After replacing pump piston or performing a change of sequence, adjustment of pump piston shell may be necessary to provide the correct number of operations to lockout. Turning pump piston shell clockwise increases effective length of piston. This causes the port, figure 21, to be covered earlier in the downward stroke. The quantity of oil escaping through this port is reduced; therefore, the amount of oil pumped to trip piston is increased. Turning pump piston shell counterclockwise causes the port to remain open during a greater part of stroke. More oil escapes through the port and less oil is pumped under the trip piston.

Proper position of pump piston shell is determined as follows:

1. Attach solenoid frame to support stringers. Make sure the plunger and pump pistons are inserted in their respective cylinders.
2. Install solenoid coil assembly as described on page 8.
3. Lower the mechanism into oil until pump and trip pistons are completely covered.

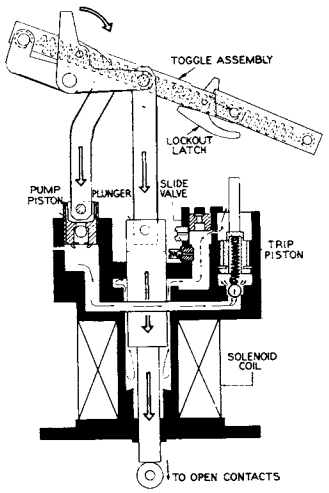

FIGURE 21

4. Operate recloser manually. Close and trip mechanism by means of the manual operating lever a few times to remove any entrapped air in the hydraulic system. Return operating handle to CLOSED position. Allow trip piston to fully reset.
5. Manually open and close recloser three times if it is set for four operations to lockout. Observe trip rod. End of the trip rod should just touch lockout latch.
6. If trip rod is not in proper position, remove solenoid frame from stringers. Unscrew pump piston shell from pump piston and smooth out punched indentation. This procedure is neces-

SOLENOID FRAME REASSEMBLY — cont'd

sary to allow finger-trip positioning of the shell. Replace the shell on piston and repeat steps 1 through 5.

7. Turn pump piston shell clockwise to increase travel of trip rod. To decrease trip rod travel, turn pump piston shell counterclockwise. See figure 22. Adjust in one-half turn increments and repeat step 5.

8. When adjustment is completed, set pump piston shell with a small punch.

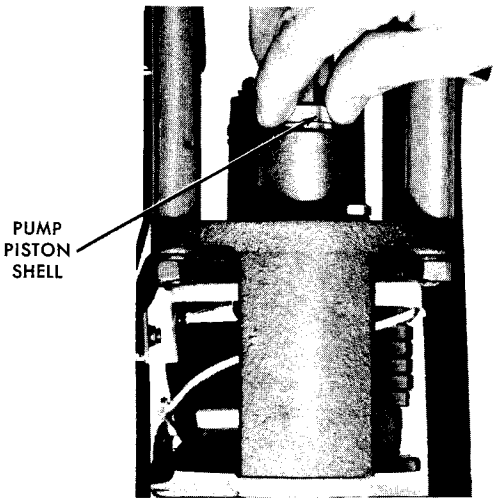

FIGURE 22

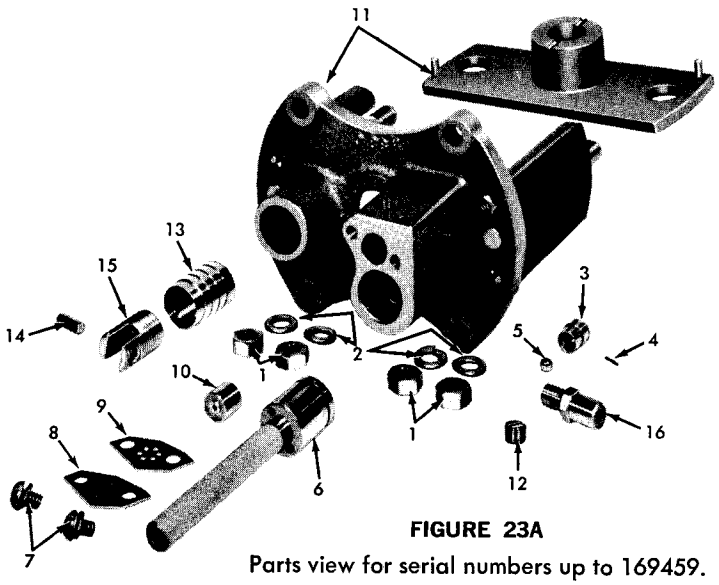

FIGURE 23A

Parts view for serial numbers up to 169459.

PARTS LIST
SOLENOID FRAME AND HYDRAULIC MECHANISM
SERIAL NUMBERS UP TO 169459

Item No.	Description	Catalog No.	No. Used Per Recloser
1	Semi-finished stl hex nut 3/8"—16UNC2	KP276	4
2	Stl Kantlink lock washer 3/8" x .141" x .094"	KP556	4
3	Check valve ball seat	KP155H	1
4	Check valve ball seat pin	KP3051A1	1
5	Stl ball grade No. 3 — 1/4" dia	KP362	1
6	Trip piston and rod assem	KA58H, KA112H, KA183H, KA89H11, KA184H, KA89H12, KA115H — See Table 1	1
7	Preassembled stl lock washer and mach scr 1/4"—20NC2 x 3/8"	KP108	2
8	Slide valve stop (top plate)	KP117H, KP264H — See Table 1	1
9	Fiber plate	KP32H, KP265H — See Table 1	1
10	Slide valve	KP41H, KP233H — See Table 1	1
11	Solenoid frame assem and bridge plate	KA723H11*, KA723H12†, KA723H13‡, KA723H14§	1
12	Timing orifice plug	KP186H, KP228H — See Table 1	1
13	Pump piston shell	KP151H	1
14	Stl straight pin	KP3055A1	1
15	Pump piston assem	KA725H	1
16	Control valve assem	KA155H•	1
17 (not shown)	Trip piston lift	KP162H, KP216H — See Table 1	1

* For reclosers serial number 48803 and below equipped with original toggle and trip lever assembly.
† For reclosers serial number 48003 and below equipped with replacement toggle and trip lever assembly KA803H11, item 8, page 19.
‡ For reclosers serial number 48004 through 58254 equipped with original toggle and trip lever assembly.
§ For reclosers serial number 48004 through 58254 equipped with replacement toggle and trip lever assembly KA803H12, item 8, page 19 and all reclosers serial number 58255 and above.
• For reclosers serial number 100975 and above only.

PARTS LIST
SOLENOID FRAME AND HYDRAULIC MECHANISM FOR SERIAL NUMBERS 169460 AND ABOVE

Item No.	Description	Catalog No.	No. Used Per Recloser
1	Solenoid frame subassem	KA206H	1
2	Trip piston assem	KA17H4	1
3a	Slide valve, fast, fast and retarded operation	KA16H4	1
3b	Slide valve, retarded, extra-retarded only	KA49H4	1
4	Control valve assem	KA211H	1
5	Washer	KP108H4	1
6	Spacer	KP3009A9	1
7	Stop, slide valve	KP110H4	1
8	Gasket	KP111H4	1
9	Spring	KP177H4	1
10	Gasket, interchangeable with item 12	KP113H4	1
11	Plate, timing, interchangeable with item 13	KP112H4-1	1
12	Gasket, for all fast operations only	KP202H4	1
13	Plate, timing, for all fast operations only	KP201H4	1
14	Stop, slide valve, use only with item 3b	KP3010A8	1
15	Pin	KP3051A1	1
16	Ball seat	KP155H	1
17	Trip rod	KP434H	1
18	Adjuster, trip	KP105H4	1
19	5/16—18 UNC x 1/2 lg stl P.A. lockwasher and hex hd capscrew (Parkerized)		1
20	Std groov-pin	KP2001A3	1
21	1/4—20 NC-2 x 3/4 lg rd hd mach screw, stl		1
22	1/4—20 NC-2 x 1/2 lg rd hd mach screw, stl		1
23	1/4 med lockwasher, steel		2
24	1/16 x 7/8 lg cotter pin, stl		1
25	1/16 x 3/8 lg roll pin		1
26	Ball, stainless steel	KP2025A2	1

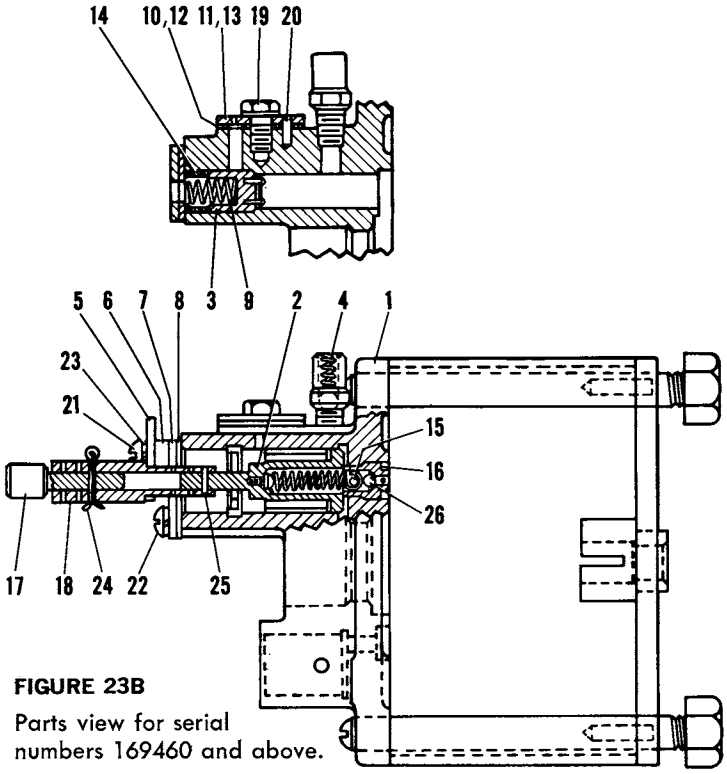

FIGURE 23B
Parts view for serial numbers 169460 and above.

INSULATING SUPPORT STRINGERS

Check condition of support stringers with an M-E Type TE tester. Replace defective members as follows:

1. Remove solenoid frame assembly as described on page 10.
2. Use a cloth wrapping as shown in figure 24 to protect stringers from being marred, and loosen them with pliers.

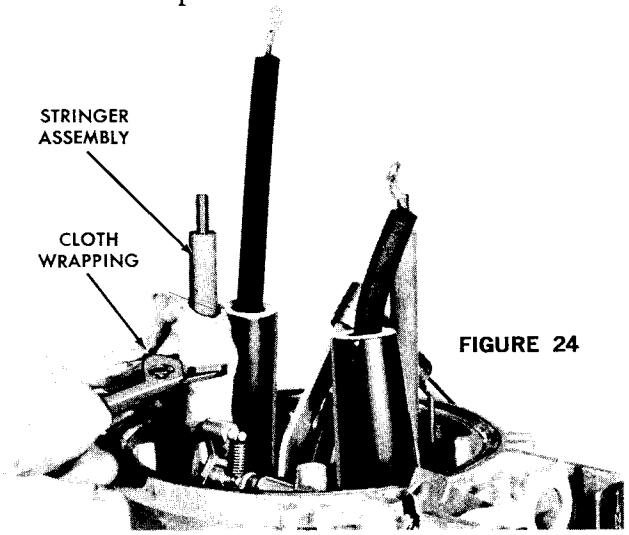

FIGURE 24

INSULATING SUPPORT STRINGERS — cont'd

3. Unscrew from head casting.
4. Replace in reverse order.

If further maintenance is to be performed at this time, do not reinstall insulating stringers.

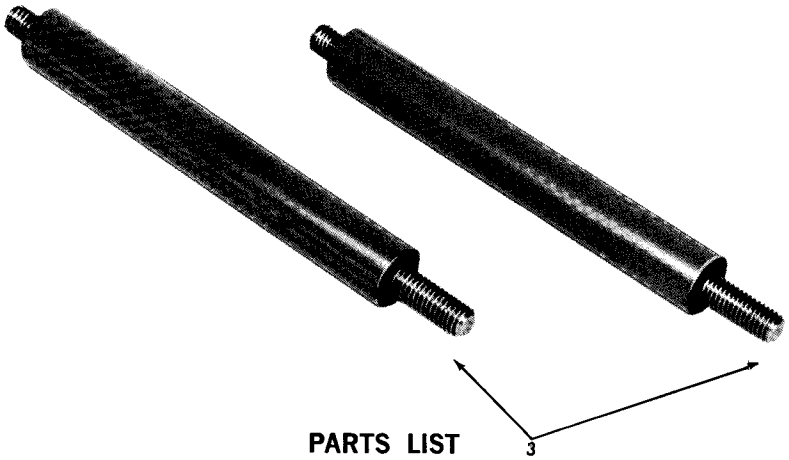

PARTS LIST
INSULATING SUPPORT STRINGER REPLACEMENT KITS

Item No.	Description	Catalog No.			No. of Kits* Per Recloser
		Serial No. 48803 and Below	Serial No. 48004 Thru 100973	Serial No. 100974 and Above	
1 (not shown)	Short stringer assem	KA17H11	KA17H12		1
2 (not shown)	Long stringer assem	KA22H11	KA22H12		1
3	Stringer assem			KA17H12	2

* Each kit contains two insulating support stringers.

BUSHING REPLACEMENT

Maintenance of bushings is generally limited to an occasional cleaning. However, if a bushing should become cracked or broken, replace as follows:

1. Untank recloser and disconnect lead if not previously done.
   a. Disconnect long lead (on side opposite manual control lever) from arc-interrupting structure as described on page 5.
   b. Disconnect short lead (on same side as manual control lever) from solenoid coil as described on page 7.
2. Remove bushing assembly, consisting of bushing, lead, and terminal, from head.
   a. Serial No. 100974 and higher
   Remove three hex-head cap screws and bushing clamps.
   b. Serial No. 100973 and lower
   Remove three hex-head cap screws that secure bushing flange to head. If recloser is equipped with a lifting strap, loosen cap screw that secures strap to second bushing.
3. Lift bushing assembly up through head casting.
4. Bushing assembly can be completely replaced, or a new bushing only may be installed. If new bushing is to be installed, unscrew bushing terminal and draw lead out lower end of bushing. Insert lead in new bushing and draw up until locking key is seated. Replace bushing terminal, using a new gasket between terminal and bushing. Twist clamping ring to remove it from old bushing and install on new bushing. This ring cushions the pressure between bushing and bushing clamps and should not be omitted.

4A. Bushings may be replaced without untanking recloser. Unscrew bushing terminal and remove terminal gasket. Disconnect bushing from the head as described in step 2 above. Lift bushing up through head casting. Install new bushing by reversing this procedure. Replace both terminal gasket and lower bushing gasket. When new bushing is slid down over lead, the lead may drop down to a point where the threads do not protrude above bushing. This can be prevented by tying a string onto the lead and threading string through bushing. After bushing is positioned, use string to pull up lead until locking key is seated.

5. Replace bushing assembly, using a new gasket between bushing and head casting. When securing bushing clamps, tighten the three bolts evenly, a little at a time. Torque should not exceed 10 foot-pounds.

If further maintenance is to be performed at this time, do not reinstall bushing assemblies.

Leaded-flange bushings are no longer manufactured. When replacement of a leaded-flange bushing is necessary, order a clamp-type bushing kit, shown in figure 26.

Note: Clamp-type bushings have the same over-all height as leaded-flange bushings; therefore, old leads and terminals can be re-used.

If new leads and terminals are desired when replacing leaded-flange bushings, order clamp-type bushing assembly kits, shown in figure 27.

When one bushing is to be changed, improved appearance of recloser will result if both bushings are replaced. The leaded-flange bushing that is still serviceable can be saved for future installation on a similar recloser.

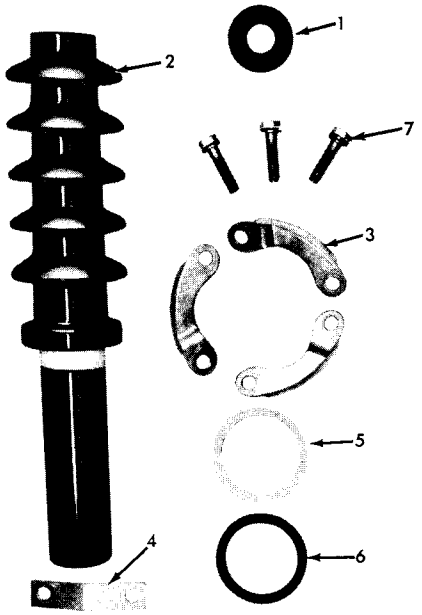

FIGURE 26

PARTS LIST
BUSHING REPLACEMENT KIT

Item No.	Description	Catalog No. Serial No. 100973 and Below	Quantity Per Kit
	Complete replacement kit, includes items 1 through 7	KA749H	
1	Upper terminal gasket	KP440H	1
2	Bushing	KP419H	1
3	Bushing clamp	KP420H	3
4	Lift strap	KP421H	1
5	Bushing clamping ring	KP425H	1
6	Lower gasket	KP426H	1
7	Sstl hex hd mach bolt 5/16"—18UNC2 x 1 3/8"	KP416	3

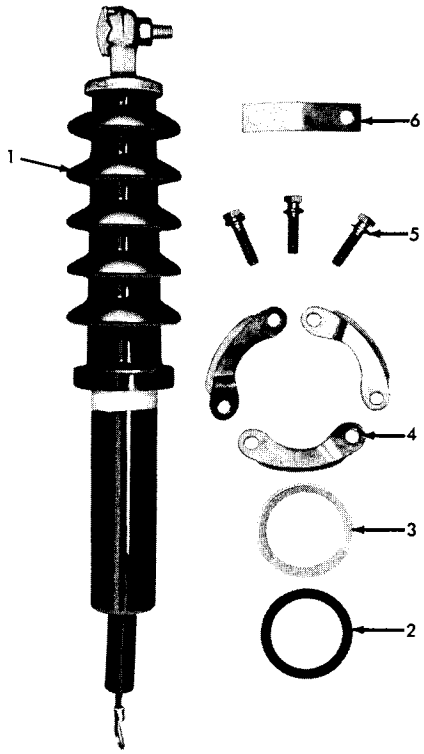

FIGURE 27

PARTS LIST
BUSHING ASSEMBLY REPLACEMENT KIT

Item No.	Description	Catalog No. Serial No. 48803 and Below	Catalog No. Serial No. 48044 Thru 100973	Quantity Per Kit
	Complete short lead replacement kit, includes items 1 through 6	KA753H11	KA753H12	
	Complete long lead replacement kit, includes items 1 through 6	KA754H11	KA754H12	
1	Bushing assem			1
	Short lead	KA234H11	KA234H13	
	Long lead	KA234H12	KA234H14	
2	Lower gasket	KP426H	KP426H	1
3	Bushing clamping ring	KP425H	KP425H	1
4	Bushing clamp	KP420H	KP420H	3
5	Sstl hex hd mach bolt 5/16"—18UNC2 x 1 3/8"	KP416	KP416	3
6	Lift strap	KP421H	KP421H	1

BUSHING REPLACEMENT

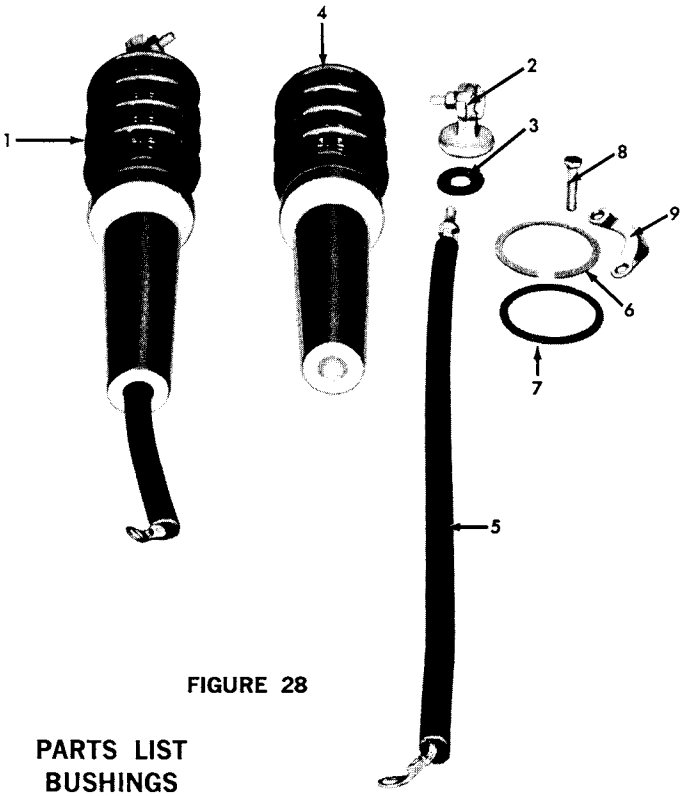

FIGURE 28

PARTS LIST
BUSHINGS

Item No.	Description	Catalog No. Serial No. 48803 and Below	Catalog No. Serial No. 48804 Thru 100973	Catalog No. Serial No. 100974 and Above	No. Used Per Recloser
1	Bushing assem				
	Short lead	KA753H	KA753H1	KA107H	1
	Long lead	KA754H	KA754H1	KA108H	1
2	Bushing terminal assem	KA82H	KA82H	KA82H	2
3	Upper terminal gasket	KP440H	KP440H	KP440H	2
4	Bushing	KP419H	KP419H	KP328H	2
5	Lead assem				
	Short	KA5H11	KA5H12	KA109H	1
	Long	KA6H11	KA6H12	KA110H	1
6	Bushing clamping ring	KP425H	KP425H	KP335H	2
7	Lower gasket	KP426H KP3H*	KP426H KP3H*	KP335H	2
8	Sstl hex hd mach bolt 5/16"—18UNC2 x 1 3/8"	KP416	KP416		6
	Sstl cap scr 5/16"—18UNC2 x 3/4"	KP175*	KP175*		6
	Sstl hex hd mach bolt 3/8"—16UNC2 x 1 5/8"			KP414	6
9	Bushing clamp	KP420H	KP420H	KP41L	6
10	Lift strap	KP421H	KP421H		1
(not shown)		KP109H*	KP109H*		1

*Required for original leaded-flange bushings.

HEAD ASSEMBLY

Normally, no maintenance will be required on the head assembly. If the head mechanism is to be disassembled, the following procedure may be used:

1. Remove insulating stringers as described on page 14.
2. Remove bushing assemblies as described on page 14.
3. Remove plunger and link assembly, and reset lever by withdrawing manual control lever shaft:
   - a. Make sure manual control lever is in CLOSED position.

     Note: If furnished, non-reclosing lever should be in up position.
   - b. Remove cover plate by unscrewing two round-head self-tapping screws. See figure 29.

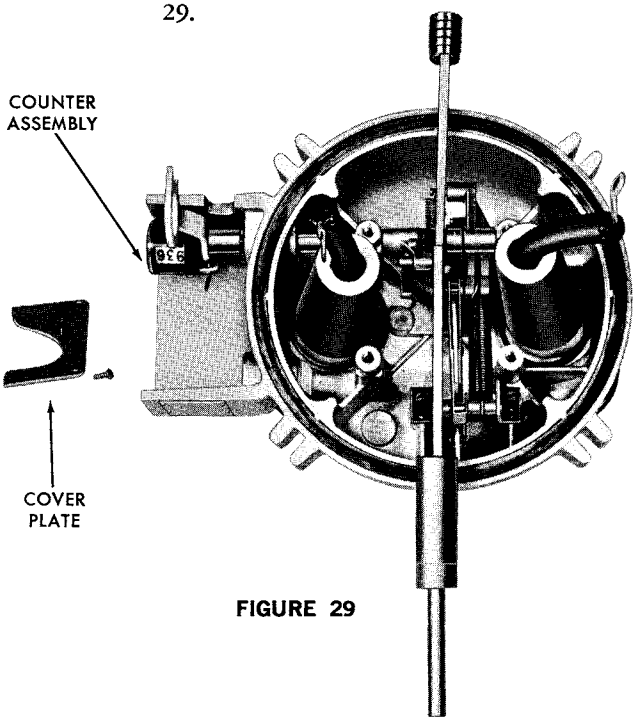

FIGURE 29

   - c. Remove counter assembly by unscrewing two round-head mounting screws.
   - d. Insert short pencil under lockout latch, as shown in figure 30. *This precaution is necessary to insure against accidental tripping of the mechanism.*
   - e. Unhook manual control lever spring shown in figure 30.

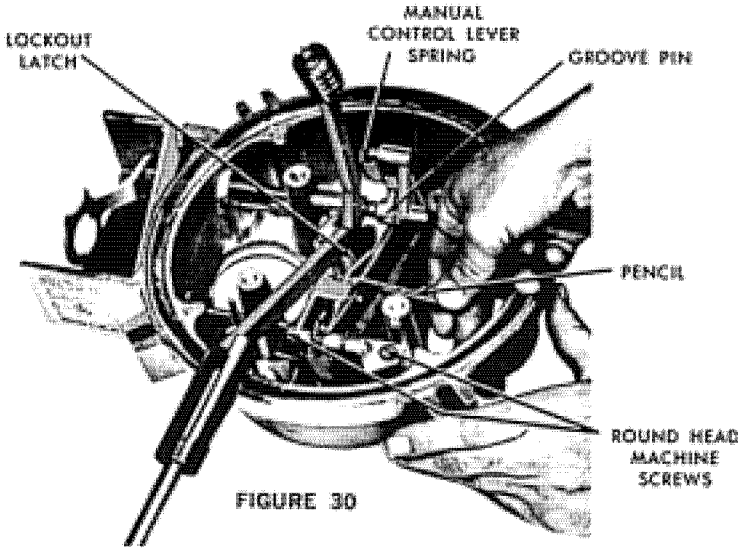

FIGURE 30

f. Using a drift punch, drive out groove pin. See figure 31.

Note: All groove pins are tapered and must be driven out from small end.

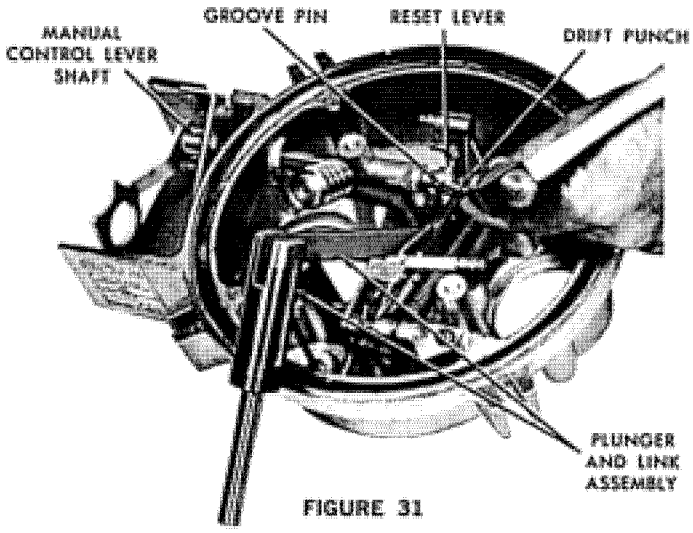

FIGURE 31

g. Withdraw manual control lever shaft and remove plunger and link assembly, and reset lever.

Note: If required, counter shaft can now be removed. Drive out groove pin with a drift punch and withdraw shaft.

4. Remove toggle and trip lever assembly by unscrewing the two round-head machine screws (refer to figure 30).

Note: If furnished, unhook the non-reclosing lever spring shown in figure 32.

Clean and inspect all parts. Replace defective parts and reassemble head mechanism:

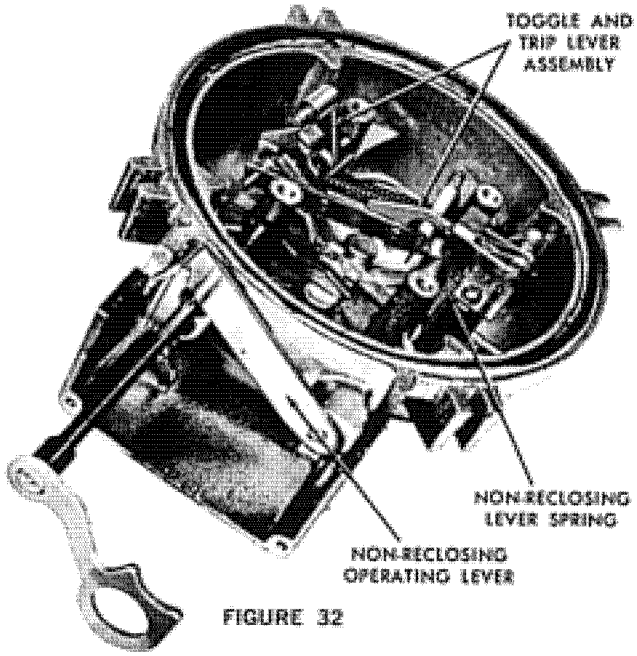

FIGURE 32

1. Replace toggle and trip lever assembly and secure with the two round-head machine screws.

Note: a. If furnished, reinstall the non-reclosing lever spring.

b. Where applicable, replace counter shaft. Drive groove pin through shaft and counter lever, with counter lever positioned so bend is away from sleet hood.

2. Position the reset lever as shown in figure 33.
3. Position the plunger and link assembly as shown in figure 33.

Note: Trip arm of link assembly is pointed straight down.

4. Insert manual control lever shaft. Make sure shaft goes through the plunger and link assembly, reset lever, and toggle and trip lever assembly.
5. Install manual control lever spring.
6. Drive in groove pin.

HEAD ASSEMBLY

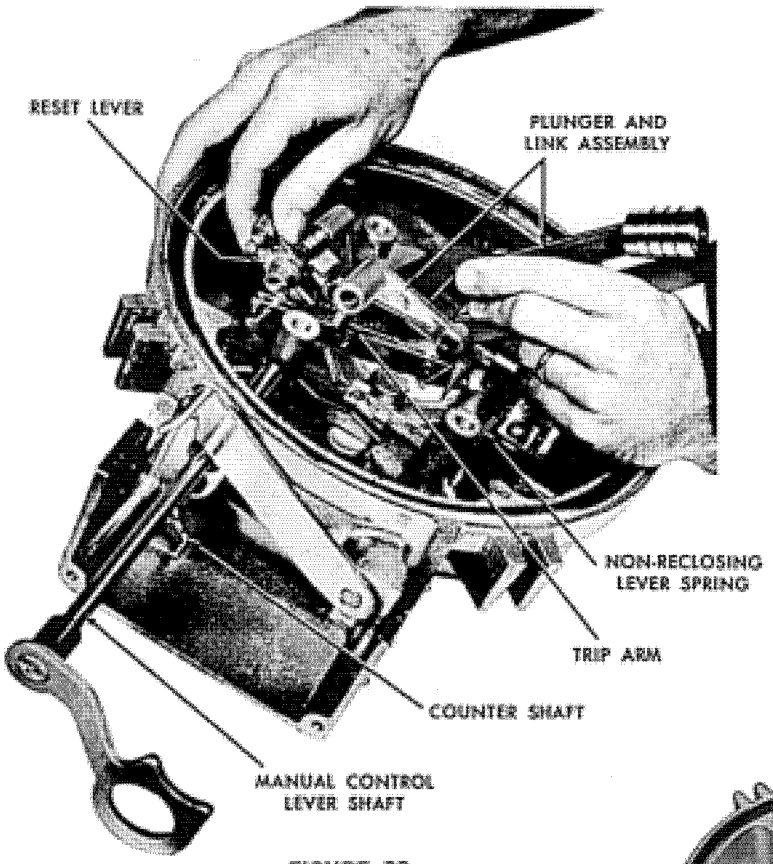

FIGURE 33

7. Install counter assembly by replacing two round-head mounting screws.

   Note: Counter arm goes under counter shaft lever.

8. Replace cover plate using two self-tapping screws.
9. Remove short pencil from under lockout latch.

Each circuit interruption is recorded by the automatic counter. When the counter shaft fails to raise the counter arm enough to register an operation, adjust as follows:

1. Remove counter assembly as described under step 3c, page 16.
2. Loosen screw holding counter arm in place.
3. Move counter arm downward.
4. Securely tighten screw.
5. Install counter assembly as described under step 7, page 17.
6. Check to see that counter is functioning properly by manually operating recloser.

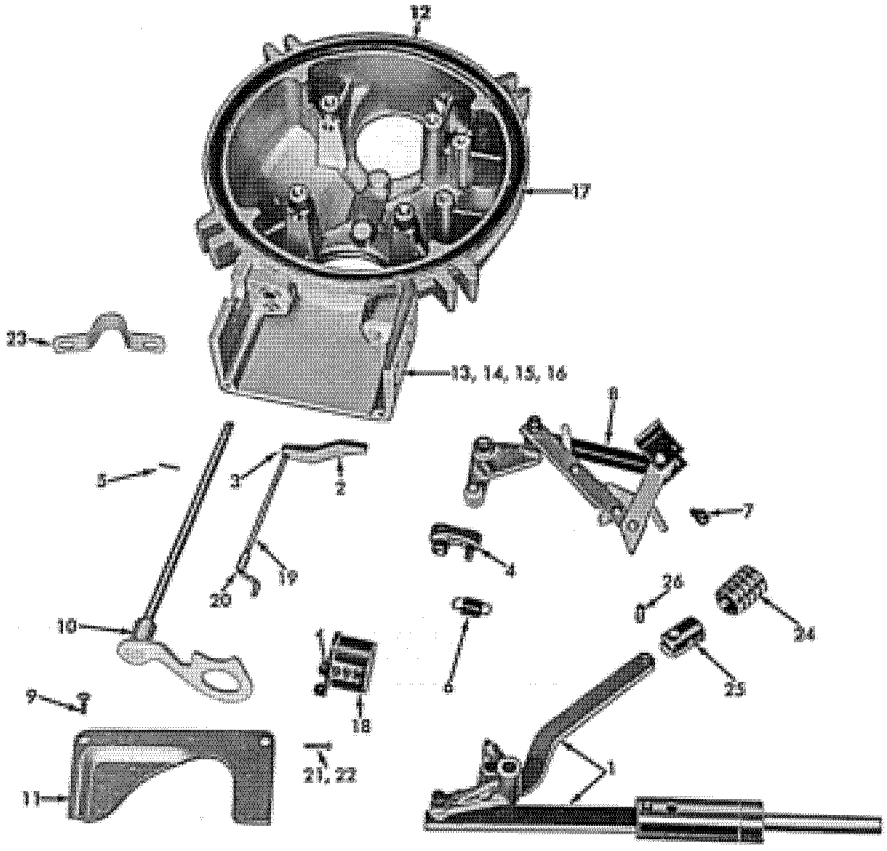

FIGURE 34

HEAD ASSEMBLY
See Figure 34

Item No.	Description	Catalog No.			No. Used Per Recloser
		Serial No. 48803 and Below	Serial No. 48804 Thru 100973	Serial No. 100974 and Above	
1	Plunger and link assem	KA63H11	KA63H12	KA63H12	1
2	Counter lever	KP18H	KP18H	KA186H*	1
3	Type 1 sstl groove pin 3/32" x 1/2"	KP126	KP126	KP126	1
4	Reset lever	KA11H	KA11H	KA11H	1
5	Type 1 sstl groove pin 1/8" x 5/8"	KP125	KP125	KP125	1
6	Manual control lever spring	KP27H	KP27H	KP27H	1
7	Stl rd hd mach scr 1/4"—20NC2 x 1/2"	KP104	KP104	KP104	2
8	Toggle and trip lever assem				1
	Accommodates non-reclosing accessory			KA119H	
	Does not accommodate non-reclosing accessory	KA803H11	KA803H12† KA803H13‡	KA803H13	
9	Sstl self-tapping rd hd scr No. 12 x 1/2"	KP52	KP52	KP52	2
10	Manual control lever and shaft assem	KA10H	KA10H	KA121H	1
11	Cover plate	KP25H	KP25H	KP308H	1
12	Head gasket	KP22H	KP22H	KP342H	1
13	Coil data plate (state amp size)	KP23H	KP23H	KP23H	1
14	Nameplate	KP24H	KP24H	KP24H	1
15 (not shown)	Operating data plate				1
	Operating sequence — blank	KP164H11	KP164H11	KP164H11	
	Operating sequence 2A2B	KP164H12	KP164H12	KP164H12	
16	Sstl self-tapping rd hd scr No. 2 x 1/4"	KP69	KP69	KP69	6
17	Head casting	KA79H	KA79H	KA708H KA700H4•	1
18	Counter and bracket assem	KA704H	KA704H	KA701H	1
19	Counter shaft	KA15H	KA15H	KA186H*	1
20	Spacer			KP376H	1
21	Cad plated stl rd hd mach scr No. 6—32NC2 x 1/2"			KP471	2
22	Cad plated stl lock washer No. 6 x .047" x .031"			KP332	2
	Plug and gage assem			KP106H✓	1
	Plug and gage assem O-ring gasket			KP902✓	1
	Preassembled electro zn plated stl lifting eye and Palnut 3/8"—16UNC2			KP322H✓	1
23	Lifting strap			KP439H	1
24	Piston shell	KP151H	KP151H	KP151H	1
25	Piston assem	KA725H	KA725H	KA725H	1
26	Pin, piston	KP3055A1	KP3055A1	KP3055A1	1

*Counter lever and counter shaft sold as complete assembly.
†For reclosers serial number 48004 through 57255.
‡For reclosers serial number 58256 and above.
•For reclosers serial number 142625 and above.
✓For reclosers serial number 100974 through 170842.

TANK AND LINER

Tank and liner should be replaced under conditions described on page 4.

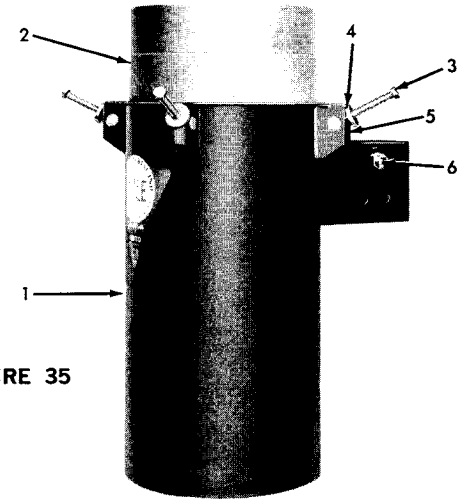

FIGURE 35

PARTS LIST
TANK AND LINER

Item No.	Description	Catalog No.		No. Used Per Recloser
		Serial No. 100973 and Below	Serial No. 100974 and Above	
1	Tank assem	KA37H	KA172H	1
2	Tank wall liner	KA748H	KA741H	2
3	Electro zn plated st hex hd cap scrs 3/8"—16UNC2 x 3"		KP176	4
4	Washer		KP375H	4
5	Combination nut and pin		KP3061A3	4
6	Ground connector	DK1B2	DK1B2	1

SUGGESTED LIST OF SPARE PARTS

M-E suggests the following parts be kept on hand to expedite any routine maintenance program.

1. Bushing assembly
2. Lower bushing gasket
3. Bushing terminal gasket
4. Contact assembly
5. Upper solenoid gasket
6. Lower solenoid gasket
7. Impact washer
8. Tank liners

NOTES

NOTES

COOPER Power Systems

©2001 Cooper Power Systems, Inc.
Kyle® is a registered trademark of Cooper Industries, Inc.

P.O. Box 1640
Waukesha, WI 53187
www.cooperpower.com

KEP
5/01

Printed on Recycled Paper

Reclosers

COOPER Power Systems

Service Information

Types 4H and V4H Maintenance Instructions

S280-10-3

CONTENTS

Introduction 1
General Description 1
Ratings and Specifications 2
Description of Operation 2
Periodic Inspection and Maintenance .. 4
Procedure 4
Oil Condition 5
Vacuum Interrupter Check 5
Testing 5
Mechanical Operation Test 5
Minimum-Trip-Current Test 5
Direct Current Testing—Type 4H ... 6
Shop Maintenance Procedures 6
Bushings 6
Contact-Box Assembly—
Type 4H Recloser 7
Contact-Box Assembly—
Type V4H Recloser 8
Solenoid Coil 9
Solenoid Frame and
Hydraulic Mechanism 9
Timing Mechanism and
Operating Sequence 12
Head Assembly 13
Recloser Modernization 14
Parts List 15

CAUTION
Do not energize this equipment out of oil.

RADIATION WARNING
Before performing electrical tests on Type V4H reclosers refer to Service Information S280-91-1.

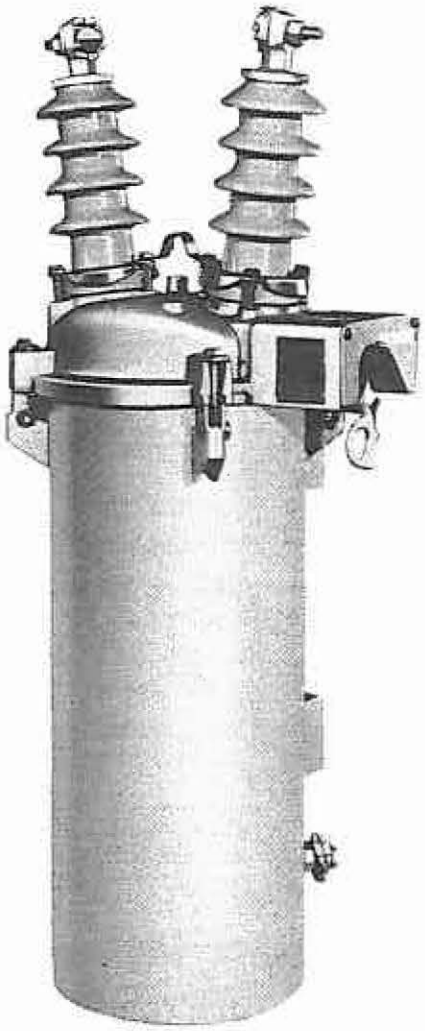

Figure 1.
Type 4H Recloser.

INTRODUCTION

Service Information S280-10-3 covers the maintenance instructions for Types 4H and V4H hydraulically controlled single-phase reclosers. This includes their general description, operating principles, and instructions for periodic inspection, testing, trouble shooting, and shop repairs. A service-parts list keyed to an exploded-view drawing of the equipment is included at the back of the manual.

GENERAL DESCRIPTION

The Types 4H (oil interrupter) and V4H (vacuum interrupter) reclosers are self-contained devices that sense and interrupt single-phase fault current on a distribution circuit. If the fault is temporary, the recloser automatically recloses to restore service. If the fault is permanent, the recloser will lock out after one, two, or three attempts to restore service, depending on its setting. Once locked out, the recloser must be manually reset to restore service.

Operating sequences of the recloser can be all fast, all retarded, or a combination of fast operations followed by retarded operations. Fast operations (no intentional delay in interrupting the circuit) are used to clear temporary faults before branch-line fuses are damaged. Retarded operations (delay inversely proportional to the magnitude of the fault) are used to allow fault current to flow long enough to be cleared by branch-line fuses. Subsequent reclosure restores service to the unfaulted portion of the circuit and confines outages to shorter sections of the line.

These instructions do not claim to cover all details or variations in the equipment, procedure, or process described, nor to provide directionsfor meeting every possible contingency during installation, operation, or maintenance. When additional information is desired to satisfy a problem not covered sufficiently for the user's purpose, please contact your Cooper Power Systems sales engineer.

September 1983 • Supersedes 12/81

SAFETY FOR LIFE

Cooper Power Systems products meet or exceed all applicable industry standards relating to product safety. We actively promote safe practices in the use and maintenance of our products through our service literature, instructional training programs, and the continuous efforts of all Cooper Power Systems employees involved in product design, manufacture, marketing, and service.

We strongly urge that you always follow all locally approved safety procedures and safety instructions when working around high voltage lines and equipment and support our "Safety For Life" mission.

SAFETY INFORMATION

The instructions in this manual are not intended as a substitute for proper training or adequate experience in the safe operation of the equipment described. Only competent technicians, who are familiar with this equipment should install, operate, and service it.

A competent technician has these qualifications:

- *Is thoroughly familiar with these instructions.*
- *Is trained in industry-accepted high- and low-voltage safe operating practices and procedures.*
- *Is trained and authorized to energize, de-energize, clear, and ground power distribution equipment.*
- *Is trained in the care and use of protective equipment such as flash clothing, safety glasses, face shield, hard hat, rubber gloves, hotstick, etc.*

Following is important safety information. For safe installation and operation of this equipment, be sure to read and understand all cautions and warnings.

Hazard Statement Definitions

This manual may contain four types of hazard statements:

DANGER: Indicates an imminently hazardous situation which, if not avoided, will result in death or serious injury.

WARNING: Indicates a potentially hazardous situation which, if not avoided, could result in death or serious injury.

CAUTION: Indicates a potentially hazardous situation which, if not avoided, may result in minor or moderate injury.

CAUTION: Indicates a potentially hazardous situation which, if not avoided, may result in equipment damage only.

Safety Instructions

Following are general caution and warning statements that apply to this equipment. Additional statements, related to specific tasks and procedures, are located throughout the manual.

DANGER: Hazardous voltage. Contact with high voltage will cause death or severe personal injury. Follow all locally approved safety procedures when working around high and low voltage lines and equipment.

WARNING: Before installing, operating, maintaining, or testing this equipment, carefully read and understand the contents of this manual. Improper operation, handling or maintenance can result in death, severe personal injury, and equipment damage.

WARNING: This equipment is not intended to protect human life. Follow all locally approved procedures and safety practices when installing or operating this equipment. Failure to comply may result in death, severe personal injury and equipment damage.

WARNING: Power distribution equipment must be selected for the intended application. It must be installed and serviced by competent personnel who have been trained and understand proper safety procedures. These instructions are written for such personnel and are not a substitute for adequate training and experience in safety procedures. Failure to properly select, install or maintain this equipment can result in death, severe personal injury, and equipment damage.

NOTES

Ratings and Specifications

TABLE 1
Voltage Ratings

Nominal system voltage, kV rms	14.4
Rated maximum voltage, kV rms	15.5
Rated impulse withstand voltage (BIL), kV crest	110
60-Hz withstand, kV rms	
Dry, 60 seconds	50
Wet, 10 seconds	45
Reclosing time, seconds	
Type 4H recloser	1½
Type V4H recloser	1
Bushing creepage distance, in.	10⅞

TABLE 2
Current Ratings

Recloser	Trip Coil Ratings Continuous (amps)	Minimum Trip Ratings (amps)	Interrupting Ratings (rms symmetrical amps)		
			4.8 kV	8.32 kV	14.4 kV
Type 4H, 100 amps max	5	10	200	200	200
	10	20	400	400	400
	15	30	600	600	600
	25	50	1000	1000	1000
	35	70	1400	1400	1400
	50	100	2000	2000	2000
	70	140	2800	2500	2000
	100	240	3000	2500	2000
Type V4H 200 amps max	5	10	200	200	200
	10	20	400	400	400
	15	30	600	600	600
	25	50	1000	1000	1000
	35	70	1400	1400	1400
	50	100	2000	2000	2000
	70	140	3000	2500	2000
	100	200	3000	2500	2000
	140	280	3000	2500	2000
	200	400	3000	2500	2000

TABLE 3
Duty Cycle

Type	Percent of Interrupting Rating	X/R Ratio	Number of Unit Operations
4H	15-20	2	32
	45-55	5	24
	90-100	10	12
			Total 68
V4H	15-20	2	128
	45-55	5	96
	90-100	10	48
			Total 272

DESCRIPTION OF OPERATION

Electrical operation of the recloser is initiated by the trip solenoid. The trip-solenoid coil is connected in series with the distribution circuit and protected from transient surges by a bypass gap. When the current through the coil approaches twice the normal current rating of the recloser, the increased magnetic field pulls the solenoid plunger down into the coil. As the plunger moves downward, it trips open the recloser contacts to interrupt the fault. The trip coil deenergizes, the plunger returns, and the contacts reclose to restore service. Up to a maximum of four such operations can be provided before the recloser locks out. It must then be manually reset before it can be put back in service.

The operating sequence of the Types 4H and V4H reclosers is governed by a hydraulic system which utilizes the surrounding insulating oil in timing and counting operations. For a normal sequence of two fast operations followed by two retarded operations, the hydraulic counting and timing system functions as follows:

First Operation

As the plunger is drawn down by the solenoid coil, the lower end trips the contact assembly to open the contacts. At the same time, the plunger displaces the oil in the plunger cylinder. The displaced oil raises the slide valve and escapes through a port above the trip piston. See Figure 2.

The pump piston, connected to the plunger by a lever arrangement also moves downward and forces a charge of oil under the trip piston. This charge displaces the trip piston a measured amount. A ball-check valve retains the charge in the trip piston. The quantity of oil in the charge can be regulated by changing the effective length of the pump piston.

Opening the contacts breaks the circuit and deenergizes the solenoid coil. Contact operating springs force the plunger back to its normal position and close the contact assembly. As the plunger moves upward, see Figure 3, oil is drawn back into the plunger cylinder, causing the slide valve to move down and block the port to the trip piston cylinder. Thereafter, oil flows slowly through the small port in the slide valve. This slow oil flow retards the return of the plunger to its normal position, causing a delay of approximately 1 or 1½ seconds before the contacts close.

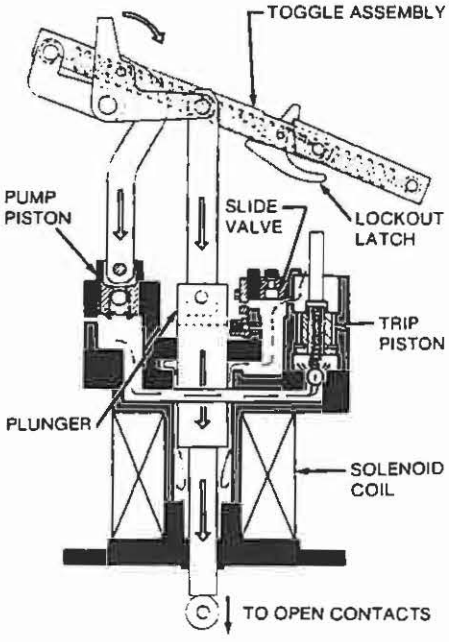

Figure 2.
Magnetic force of coil pulls plunger down.

Second Operation

If the fault still exists after the contacts close, the recloser recycles. This second operation is similar to the first, except the second charge of oil from the pump raises the trip piston high enough to block the escape port in the slide-valve cylinder.

Third Operation

If the fault still exists after the contacts close the second time, the recloser again recycles. During this third operation, see Figure 4, travel of the plunger down into the coil is impeded by the oil. Oil displaced by the plunger raises the slide valve, but it cannot flow out through the blocked escape port. The oil must flow around the plunger and through the orifice in the timing plate. Slowing the downward movement of the plunger causes a delay in opening the contacts to produce the retarded trip operation.

If the fault current is high, enough pressure will be developed by the plunger to open the spring-loaded control valve in the trip-piston cylinder and provide an additional escape port for the oil. This produces the inverse time-current characteristic of the retarded trip operation.

As the plunger moves downward, a third charge of oil is forced under the trip piston, raising it another measured amount in its cylinder.

Fourth Operation

If the fault is still present after the third reclosure, the recloser performs a fourth operation. The fourth operation is a retarded trip operation similar to the third. However, the fourth charge of oil produced by the pump raises the trip piston the remaining distance required to trip the lockout latch. See Figure 5. This latch releases the toggle which holds open the contacts until the toggle is manually reset by operating the yellow operating handle on the recloser.

During lockout, the trip piston, aided by its spring, settles to the bottom of its cylinder. The recloser is ready to perform another operating sequence as soon as the contacts are manually closed.

If a temporary fault clears before lockout, all mechanical operations cease after the contacts have closed on the first successful reclosure. The trip piston settles to the bottom of its cylinder and the recloser is ready to start another operating sequence when a fault again occurs. Settling of the trip piston enables the recloser to "forget" that a temporary fault occurred. Settling time is approximately one minute per operation at a 70 F ambient temperature.

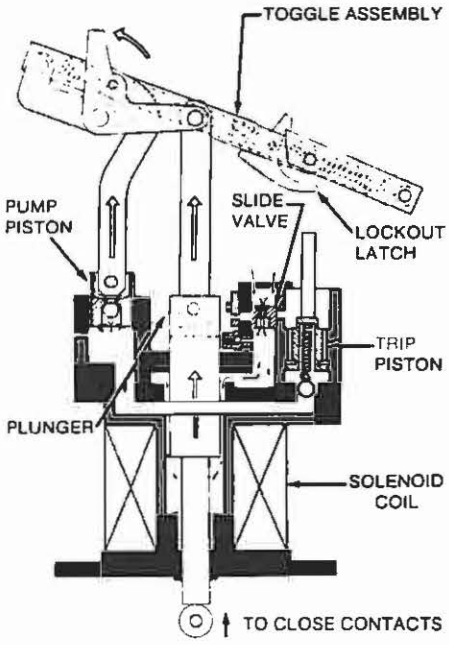

Figure 3.
Plunger returns to normal position.

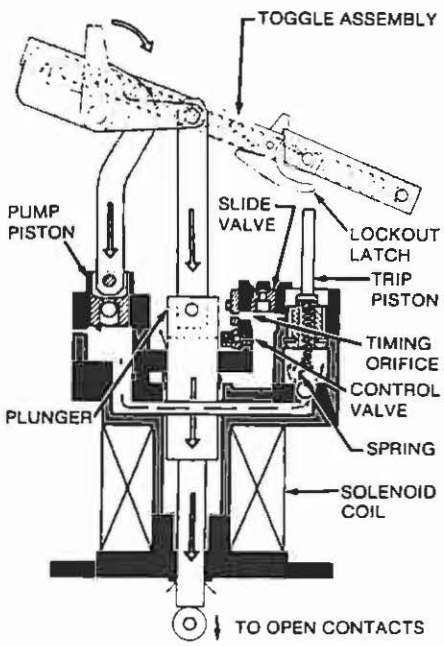

Figure 4.
Magnetic force pulls plunger down for third operation which is retarded by blocked escape port.

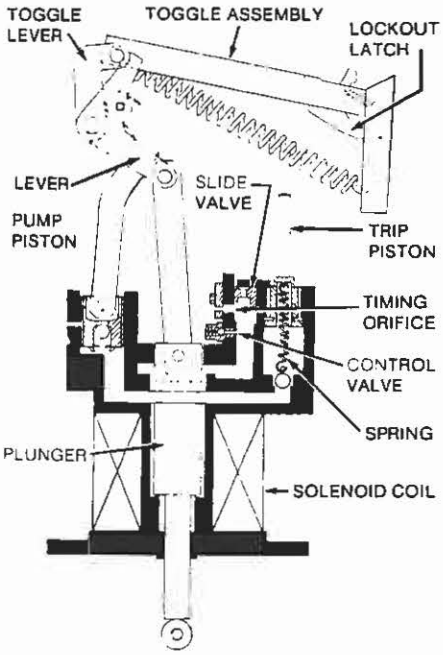

Figure 5.
Fourth operation causes lockout as trip piston strikes lockout latch.

PERIODIC INSPECTION AND MAINTENANCE

The frequency of maintenance depends upon local climatic conditions and the severity of the operating service imposed on the recloser. McGraw-Edison recommends that, initially, a maintenance check should be made after one year of service, or the completion of a standard duty cycle, whichever occurs first. A study of maintenance records for similar equipment and the results of the initial inspection can then be used to establish routine maintenance intervals.

American National Standards ANSI C37.61-1973, "Guide for the Application, Operation and Maintenance of Automatic Circuit Reclosers," gives a procedure for evaluating the actual operating duty of an oil recloser in terms of its standard duty cycle.

NOTE: See Recloser Modernization section, page 14.

Procedure

Each periodic maintenance check should include at least the following steps (Figure 6):

1. Bypass and remove the recloser from service.
2. Inspect external components.
   A. Check for broken or cracked bushings, paint scratches, and other mechanical damage.
   B. Note the counter reading and enter into the record log.
   C Close and trip the recloser manually several times to check manual operation. Leave the recloser in the open position.
3. Loosen the bolts that secure the head casting and remove the mechanism from the tank. (The gasket seal can be broken by carefully prying apart the head and tank.)
   • Allow the oil to drain off the mechanism.
4. Clean all internal components.
   A. Remove all traces of carbon by wiping with a clean, lint-free cloth.
   B. Flush mechanism with clean, dry transformer oil.

CAUTION
Never use volatile solutions, detergents, or water-soluble cleaners.

5. Inspect contacts and interrupting structures.
   For 4H recloser:
   A. Slight pitting and discoloration can be dressed with a piece of finishing-grade sandpaper.
   B. Replace moving contacts and interrupting structures if they are severely eroded.

   For V4H recloser:
   See Vacuum Interruper Check in this section.
6. Inspect tank liners.
   • Soft or spongy areas indicate that water has been absorbed. Replace liners if this condition exists.
7. Check the dielectric strength of the insulating oil.
   A. The dielectric strength should not be less than 22 kV when tested with a 0.1-in. gap in accordance with methods specified in ASTM D117.
   B. Low dielectric strength usually indicates the presence of water or carbon deposits.
8. If oil must be replaced, drain the tank and clean out all sludge or carbon deposits.
9. With the mechanism removed, fill the tank with clean insulating oil to the level marked on the tank liner. Capacity is approximately five gallons.
   • Use only new or like-new reconditioned transformer oil which conforms to the specifications in McGraw-Edison Reference Data R280-90-1, "Oil Specifications and Test."
10. Examine head gasket.
    • Replace the o-ring gasket if it has taken a permanent set.
11. Replace the mechanism in the tank.
    A. Replace the head bolts and torque to 11 to 16 ft-lb. Clamping forces must be applied gradually and equally, in rotation, to each bolt. This results in evenly distributed gasket sealing pressure.
    B. Operate the recloser manually approximately eight times to expel all air from the hydraulic system.
    C. See Testing section (page 5) to check for proper operation before returning recloser to service.

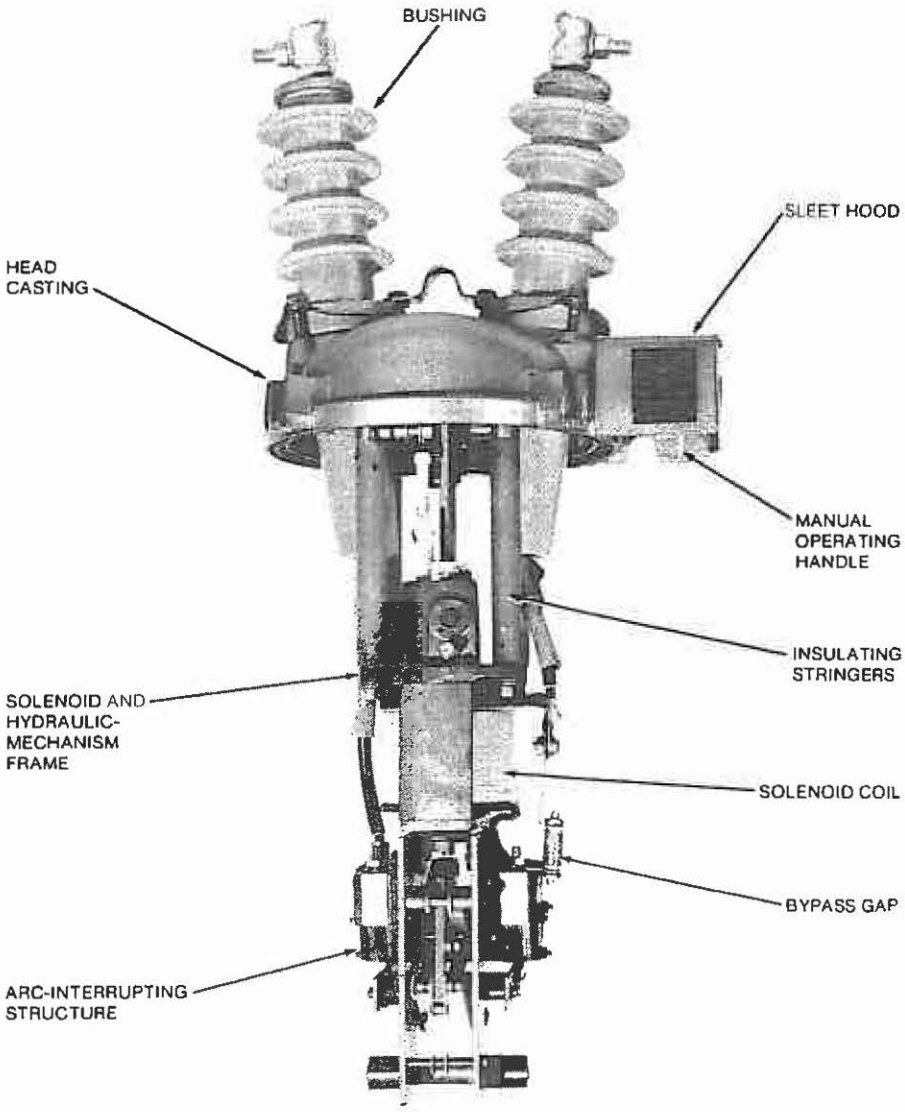

Figure 6.
Identification of major assemblies-Type 4H Recloser.

Oil Condition

Oil plays an important role in the proper functioning of the recloser. It provides the internal insulation barrier from phase to ground, it acts as the timing and counting medium, and, in the 4H recloser, it acts as an arc quencher. For effective recloser operation, the oil must be replaced before it deteriorates below a safe level. Oil that has been contaminated with carbon sludge or has a dielectric strength of less than 22 kV should be replaced.

New oil should always be filtered before using even though it may be obtained from an approved source. Passing the oil through a blotter press will remove free water and solid contaminants such as rust, dirt, and lint. When filtering the oil, aeration should be kept to a minimum to prevent moisture in the air from condensing in the oil and lowering its dielectric strength.

Used oil must be treated before reusing. Filtering may remove absorbed and free water and other contaminants to raise the dielectric strength to acceptable levels. However, filtering does not always remove water-absorbing contaminants and the dielectric strength of the oil may fall rapidly after being returned to service. Therefore, the recloser should be filled with new oil or oil that has been restored to like-new condition.

Vacuum Interrupter Check

VACUUM INTEGRITY

The following procedure may be used to check the vacuum integrity of the interrupter.

RADIATION WARNING

At voltages up to the specified test voltage, the radiation emitted by the recloser is negligible. However, above this test voltage level, radiation injurious to personnel may be emitted. See Service Information Bulletin S280-90-1 for further details.

1. With the unit installed in its oil-filled tank, pull down the yellow operating handle to make sure the recloser is open.
2. Perform a hi-pot test across the bushings of the open recloser at 37.5 kV ac rms.
3. The interrupter should withstand the specified test voltage for one minute and should not load down the test source.
4. Replace any interrupter failing to meet this test.

CONTACT EROSION

With the mechanism removed from its tank and the recloser closed (yellow operating handle up), check the distance, dimension X in Figure 7, between the interrupter bracket and the larger diameter of the stepped shaft. If dimension X is less than 13/16-in., the interrupter must be replaced.

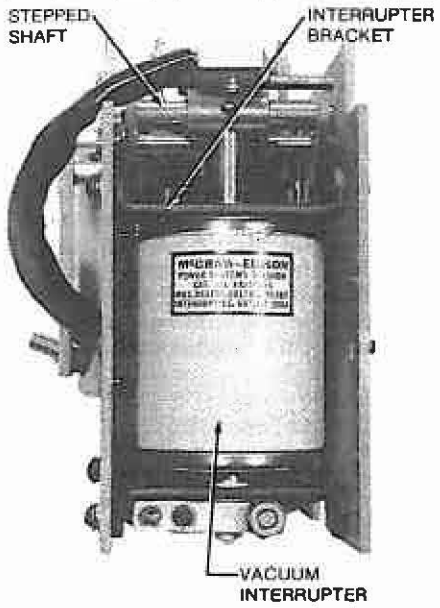

Figure 7.
Measurement of contact erosion.

TESTING

Two simple tests can be performed to determine if the recloser is operating properly. These tests should be adequate for most users. For a more detailed explanation of testing procedures refer to Reference Data R280-90-2, "Low Voltage A-C Testing of Hydraulic Recloser."

Mechanical Operation Test

To check the number of operations to lockout and the number of fast and retarded operations, the following mechanical-operation test can be performed.

1. Move the yellow manual operating handle to the CLOSED position and wait at least three minutes to be sure the trip piston is fully reset.
2. Move the operating handle to the OPEN position and listen for the opening of the main contacts. Move the handle to the CLOSED position and repeat this cycling until lockout occurs.
3. When lockout occurs, the unlatching of the lockout mechanism can be heard. In addition, for a short time afterwards, the yellow manual operating handle cannot be latched in the CLOSED position.
4. During fast operations the contacts open immediately after the handle is moved to the OPEN position. On delayed openings, a noticeable slowing of the handle movement can be observed until contacts open.

Minimum-Trip-Current Test

To perform the minimum-trip-current test:

1. Connect a low-voltage variable-current source to the recloser terminals as shown in Figure 8.

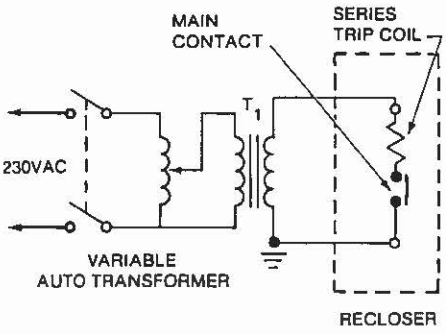

Figure 8.
Test-circuit diagram.

A. Ratio and kVA size of the transformer (T_1) will depend upon the size of the recloser trip coil.
B. Table 4 shows the test voltage and kVA requirements for all ratings of the recloser. This table is based on a 4-times-current-rating test circuit capacity to minimize the effects of an increasing series solenoid inductance.

TABLE 4
Recloser Test Circuit Power Requirements for Minimum-Trip-Current Test

Coil Rating (amps)	Test Circuit Current (amps) (4 X Coil Rating)	Voltage Required	Test kVA (Short-Time)
5	20	750	15
10	40	375	15
15	60	245	14.7
25	100	150	15
35	140	110	15.5
50	200	75	15
70	280	55	15.5
100	400	40	16.0
140	560	30	16.8
200	800	20	16.0

2. Close the recloser by moving the yellow operating handle to CLOSE. Wait at least three minutes to make sure the trip piston is completely reset.
3. Slowly raise the variable-autotransformer voltage from zero and note the maximum ammeter reading needed to trip the recloser.
4. As the trip-solenoid plunger starts to move, the trip-coil impedance will start to rise and cause a decrease in current.
   - The **maximum** reading before the current decreases is the **minimum** trip current.

Direct Current Testing—Type 4H

Only the Type 4H oil recloser can be operated with batteries as a quick check of its operating condition.

> **CAUTION**
> Do not attempt to operate the Type V4H vacuum recloser with a dc source. The vacuum interrupter will be severely damaged if a dc arc interruption is attempted.

1. Move the operating handle to the CLOSED position and wait three minutes to make sure the trip piston has completely reset.
2. Connect a storage battery across the recloser terminals and count the operations to lockout. Refer to Table 5 for the number of batteries to use for testing Type 4H reclosers. If the correct number of operations does not occur, wait five minutes and repeat the test.

   Air in the hydraulic system can cause incorrect operation. Operate the recloser manually approximately eight times to expel all air from the system.

SHOP MAINTENANCE PROCEDURES

The operations described in this section should be performed under the cleanest conditions possible. The repair work, except for bushing replacement, will be simplified if the work bench is arranged so the mechanism can be inverted (bushings down). No special tools are required for any of the repair procedures.

Bushings

Bushing maintenance generally consists of cleaning the bushings thoroughly and examining them carefully for cracks while the recloser is untanked for servicing. Cracked or broken bushings must be replaced.

TABLE 5
Number of Batteries Required to Trip Type 4H Recloser

Coil Rating (amps)	Number of 12-Volt Batteries	Cable Size
5	2 (in series)	Short Lengths of No. 6 or Larger
10	1 (in series)	
15	1 (in series)	
25	1 (in series)	
35	1	
50	1	
70	2 (in parallel)	
100	2 (in parallel)	

A bushing can be replaced with the recloser either tanked or untanked. The following criteria should be used as a guide:

- If the bushing has been damaged in service or while in storage, the recloser should be untanked. Water or other contaminants may have entered the tank (check the tank liner and test the condition of the oil), the bushing lead could be damaged (either mechanical damage or from flashover), or pieces of porcelain may be in the tank.
- If the bushing porcelain is accidentally chipped during installation or maintenance and it is obvious that no other damage has been done, it is not necessary to untank the recloser to replace the bushing porcelain.

REPLACING BUSHING ASSEMBLY WITH THE RECLOSER UNTANKED

1. Untank the recloser and disconnect the appropriate bushing lead.
   A. The long lead is disconnected at the arc-interrupting structure.
   B. The short lead is disconnected at the solenoid coil.
2. Remove the three hex-head capscrews and the bushing clamps securing the bushing to the head casting and lift the entire bushing assembly up through the head. Discard the gasket between the bushing and the head casting.
3. Twist the aluminum clamping ring and remove it from the old bushing porcelain. If the ring is in good condition, install it on the new bushing porcelain. If the old ring is damaged, a new clamping ring must be installed.
   - The clamping ring cushions the pressure between the bushing and the bushing clamps and should not be omitted.
4. Replace the bushing assembly. Use a new gasket between the bushing flange and the head casting.
5. Position the aluminum clamping ring with the split in the ring centered between two clamping bolts.
6. Replace the bushing clamps and tighten the capscrews evenly, a little at a time.
   - *Clamping torque should not exceed 10 ft-lb.*
7. Reconnect the bushing lead.

REPLACING BUSHING PORCELAIN WITH THE RECLOSER TANKED

1. Unscrew the bushing terminal and discard the terminal gasket.
2. Remove the three hex-head capscrews and the bushing clamps, lift the porcelain from the head casting, and discard the old gasket.
3. Transfer the aluminum clamping ring from the old porcelain to the new porcelain. (Replace the ring if damaged.)
4. Install a new gasket between the porcelain and the head casting.
5. Tie a string to the lead, thread it through the bushing, and pull the lead through the porcelain as the porcelain is inserted into the head casting.
   - Pull the lead until the locking key is seated.
6. Install a new terminal gasket and screw the terminal onto the lead.
7. Position the aluminum clamping ring with the split in the ring centered between two clamping bolts.
8. Replace the bushing clamps and tighten the capscrews evenly, a little at a time.
   - *Clamping torque should not exceed 10 ft-lb.*

Contact-Box Assembly Type 4H Recloser (See Figure 9)

Fault current is interrupted by an oil-quenched arc-interrupting structure consisting of two interrupting chambers connected by a cross-blast tube. Circuit opening is accomplished by a double, spring-loaded, moving contact assembly arranged to provide two breaks in series. As the contacts open, gas pressure generated by the arc in the closed generating chamber forces cool oil against the arc in the vented exhaust chamber, rapidly deionizing the arc path and interrupting the current.

If contacts are badly burned or do not close completely, both interrupting-chamber assemblies, the cross-blast tube, and the moving-contact assembly must be replaced. Proceed as follows:

TO REMOVE THE CONTACT BOX ASSEMBLY:

1. Lock in operating mechanism by closing the yellow operating handle.
2. Disconnect the long bushing lead from one side of the interrupter structure.
3. Disconnect the coil lead and bypass gap from the other side of the interrupter structure.
4. Remove the two hex-head bolts that secure the arc interrupting structure to the solenoid frame and remove the structure.

   NOTE: To prevent inadvertent tripping of the operating mechanism, lock out the mechanism. While securely holding the yellow operating handle in the closed position, trip the lock-out latch (Figure 20) and then slowly release the operating handle.
5. Holding the moving contacts open, loop a light cord to the contact spring at the end farthest from the cross-blast structure (see Figure 10) and unhook both springs. Do not stretch the springs any further than required for removal.
6. Unhook the torsion spring and remove the two roundhead screws, lockwashers, flat washers, and pivot bearings to free the moving contact arm assembly. Remove the assembly.
7. Remove the four hex nuts, lockwashers, and flat washers that secure the exhaust and generating chambers to the contact-box assembly and remove both chambers by sliding them off the mounting bolts. Figure 11 shows the exhaust chamber removed from the contact-box assembly. Note the position of the insulating spacers.
8. Remove the cross-blast tube. Remove and save the fibre dowel before discarding the tube.

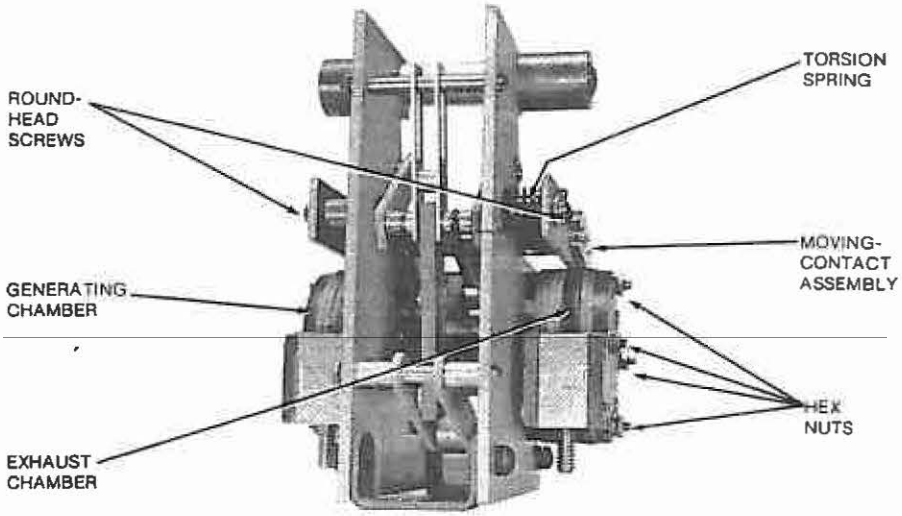

Figure 9.
Type 4H contact-box assembly.

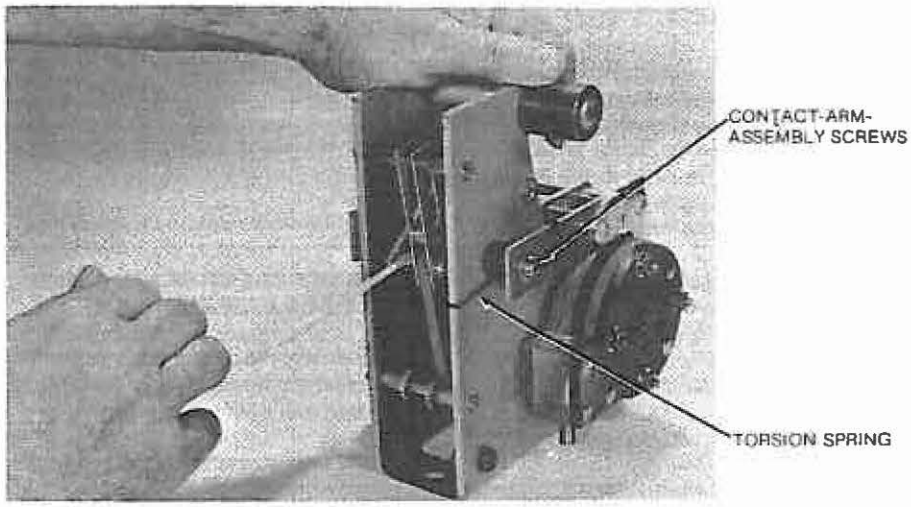

Figure 10.
Releasing contact springs.

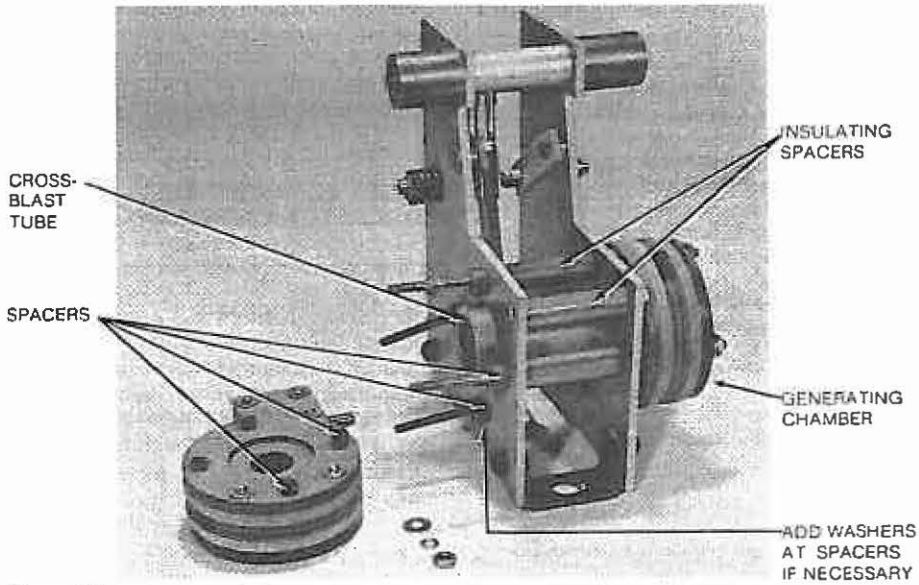

Figure 11.
Partially assembled contact box.

TO REASSEMBLE THE CONTACT-BOX ASSEMBLY:

1. Assemble the fibre dowel to the new cross-blast tube and install the tube into the contact box. Make sure the dowel is secured in the notch on the side plate.
2. Assemble the interrupting chambers and the moving contact assembly by reversing Steps 5, 6 and 7 above.

   NOTE: After reassembling the contact-box assembly, check for completely free entry of the moving contacts into the stationary-contact housing. Use No. 10 plain brass washers to adjust the position of the stationary-contact housing with respect to the moving contact (see Figure 11).

TO INSTALL THE CONTACT-BOX ASSEMBLY:

NOTE: If further maintenance is to be performed, do not reinstall the arc-interrupting structure.

1. Lock in the operating mechanism by closing the yellow operating handle.
2. Install the contact-box assembly and secure with the two hexhead bolts.
3. Reconnect the coil lead and bypass gap to the generating chamber.
4. Reconnect the long bushing lead to the exhaust chamber.
5. Manually open and close the mechanism several times to check the operation of the arc-interrupter assembly.

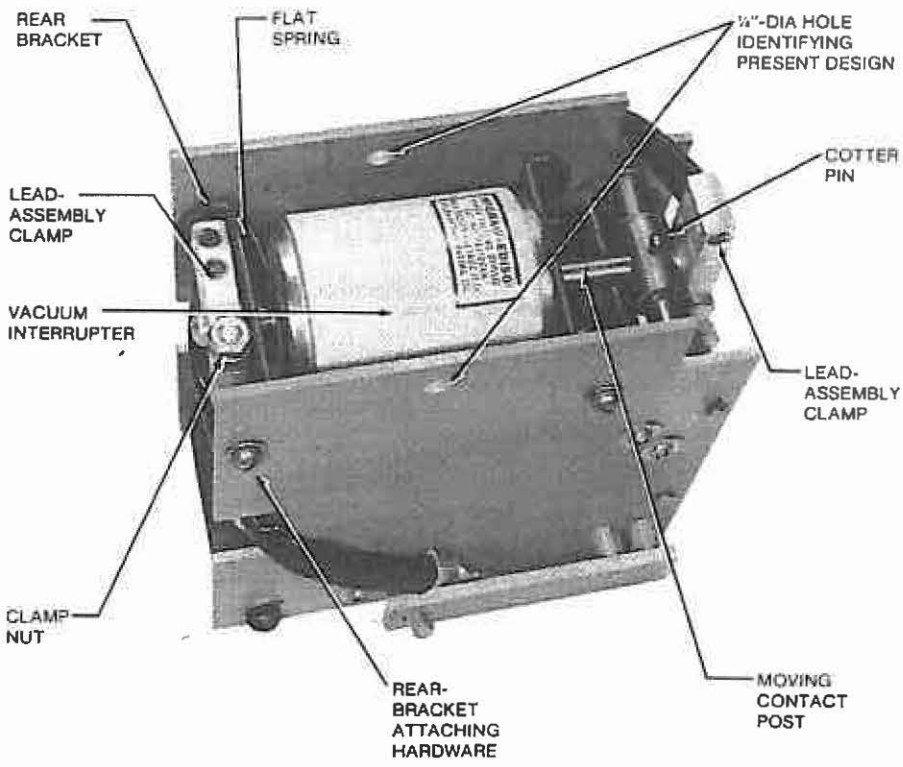

Figure 12.
Type V4H vacuum contact-box assembly.

Vacuum Contact-Box Assembly Type V4H Recloser (See Figure 12)

Current is generally interrupted in less than 1/2 cycle by the vacuum interrupter. Circuit opening is accomplished by a spring-loaded contact assembly operating in a high-vacuum chamber.

When the vacuum interrupter is to be replaced because of contact wear (dimension X in Figure 7 is less than 13/16 in.) replace the entire contact-box assembly. If, however, replacement is required because of vacuum interrupter failure (physical damage, loss of vacuum) the vacuum interrupter only can be replaced.

NOTE: Before attempting to replace the vacuum interrupter, check that the contact-box assembly has a 1/4-in.-diameter hole near the bottom edge of both side plates (see Figure 12). Units without the hole are of an earlier design in which the interruper only cannot be replaced (replace the entire contact-box assembly). Units with the hole are of a later design in which the vacuum interrupter only can be replaced.

TO REPLACE THE ENTIRE VACUUM CONTACT-BOX ASSEMBLY:

1. Lock in the operating mechanism by closing the yellow operating handle.
2. Disconnect the long bushing lead from one side of the interrupter structure.
3. Disconnect the lower coil lead and bypass gap from the other side of the interrupter structure.
4. Remove the two hex-head bolts that secure the arc-interrupting frame and remove the structure.

   NOTE: To prevent inadvertent tripping of the operating mechanism, lock out the mechanism. While securely holding the yellow operating handle in the closed position, trip the lock-out latch (Figure 20) and then slowly release the operating handle.

TO INSTALL THE VACUUM CONTACT-BOX ASSEMBLY:

NOTE: If further maintenance is to be performed, do not reinstall the arc-interrupting structure.

1. Lock in the operating mechanism by closing the yellow operating handle.
2. Install the contact-box assembly and secure with the two hex-head bolts.
3. Reconnect the coil lead and bypass gap to one side of the interrupting structure.
4. Reconnect the long bushing lead to the other side of the structure.
5. Manually open and close the mechanism several times to check the operation of the arc-interrupter assembly.

TO REPLACE ONLY THE VACUUM INTERRUPTER:

> **CAUTION**
> Handle the vacuum interrupter carefully. To prevent damage to the bellows, do not twist or apply radial pressure to the movable-contact rod.

1. Remove the lead assemblies from each end of the vacuum interrupter by loosening the clamping nuts and prying open the clamps.
2. Remove the cotter pin which attaches the movable-contact rod to the operating linkage.
3. Remove the rear bracket by removing the two attaching screws, lockwashers, and flat washers.
4. Remove the flat spring and withdraw the vacuum interrupter.
5. Install a new interrupter and reassemble the structure in the reverse order of disassembly.

Solenoid Coil

Type 4H and V4H reclosers are constructed so that solenoid coils of different ampere ratings are interchangeable. To change a coil proceed as follows:

1. Remove the arc-interrupting structure.
2. Disconnect the short bushing lead and coil-gap assembly from the upper coil lead.
3. Remove the bridge plate, plunger stop, and lower solenoid gasket shown in Figure 13.

   NOTE: On Type 4H reclosers above serial 62965 and Type V4H reclosers above serial 4490, the bridge plate and plunger stop are assembled with a press fit. On reclosers with lower serial numbers the bridge plate and plunger stop are assembled with a loose fit.

   Also note that the bridge plate is drilled and pinned to the solenoid frame in a factory fixture for optimum plunger fit. To obtain the most reliable operation do not intermix bridge plates, plungers, plunger stops, or any other parts between reclosers.

4. Remove solenoid coil, upper solenoid gasket, and impact washer shown in Figure 14.

   NOTE: Whenever the solenoid coil is replaced or reinstalled, the upper and lower solenoid gaskets must be replaced to maintain proper timing characteristics.

5. Install solenoid coil of desired rating by reversing the above procedure. Make sure that the coil is installed with its leads on the same side of the recloser as the sleet hood and with the short coil lead connected to the short bushing lead and the long coil lead connected to the contact box.

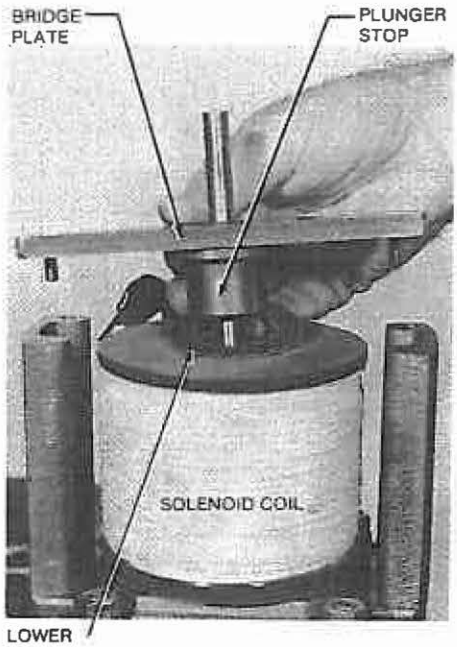

Figure 13.
Removing bridge plate, plunger stop, and lower solenoid gasket.

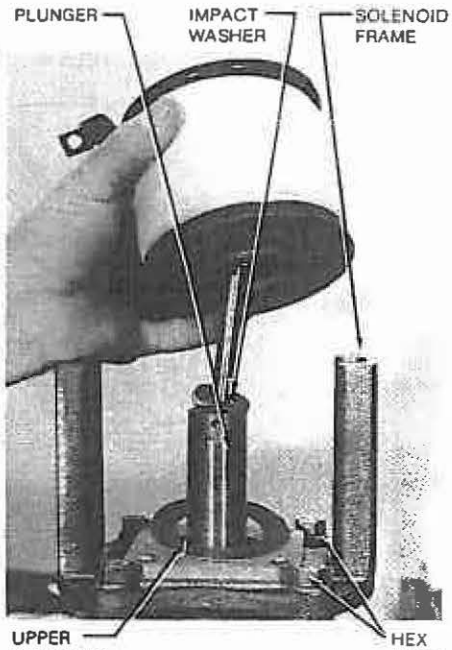

Figure 14.
Removing solenoid coil, upper solenoid gasket, and impact washer.

Solenoid Frame and Hydraulic Mechanism (See Figure 15)

Normally, the components of the hydraulic timing and counting mechanism will require little or no maintenance. To disassemble the mechanism for cleaning, inspection, and possible replacement proceed as follows:

1. Remove the four hexnuts and lockwashers which attach the solenoid frame to the support stringers.

CAUTION
Raise the assembly slowly to withdraw the plunger and pump piston from their cylinders. Be careful to keep them from falling and being damaged. (See Figure 16.)

2. Remove the slide valve and spring by removing the two screws and lockwashers attaching the trip-piston stop and the slide-valve stop and gasket to the solenoid frame.

   NOTE: Before disassembly, scribe a mark across the slide-valve stop and the adjacent solenoid frame to identify proper orientation during assembly.

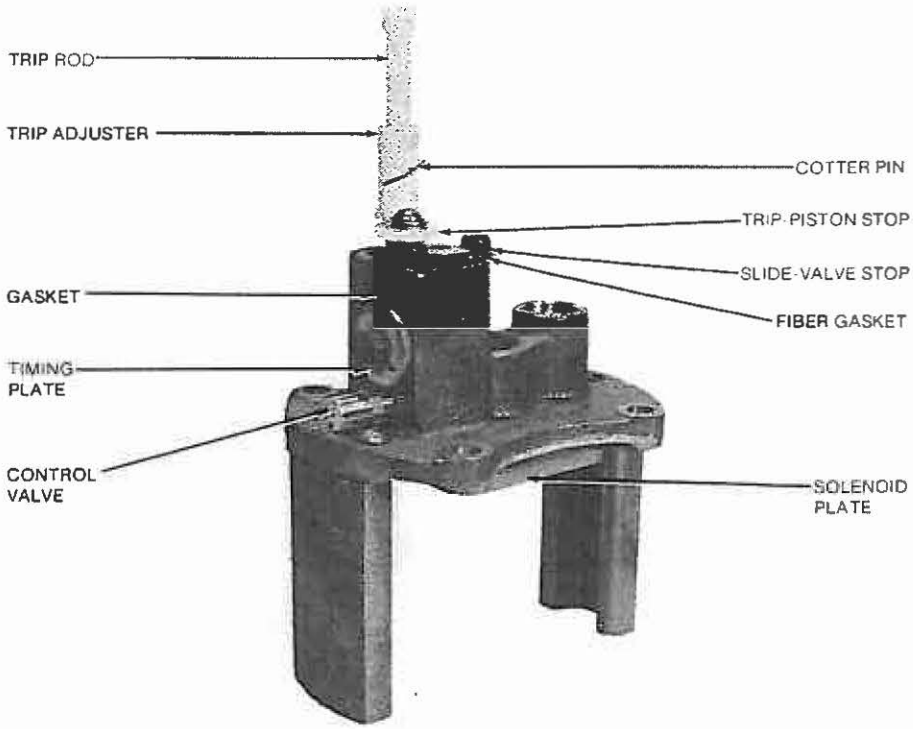

Figure 15.
Solenoid frame and hydraulic mechanism.

3. Remove the timing plate, gasket and the control-valve assembly from the solenoid frame.
4. Remove the solenoid plate and gasket by removing the four flat-head screws.

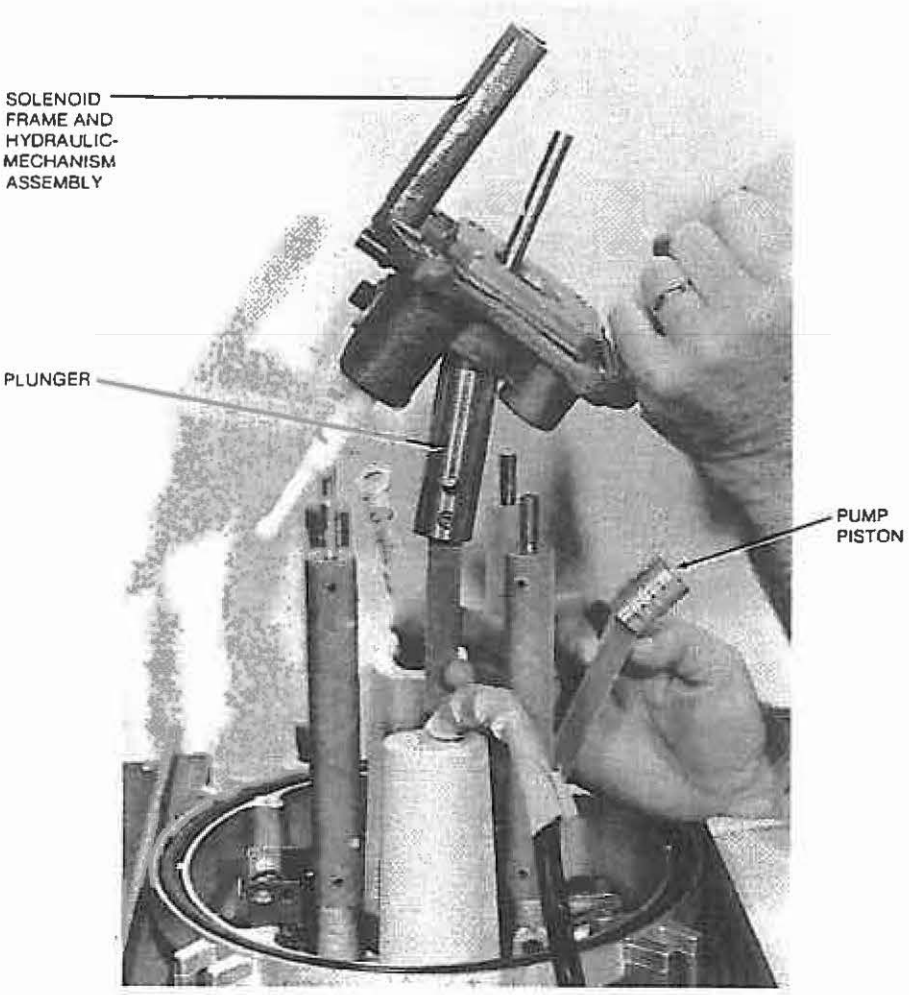

Figure 16.
Removing solenoid frame and hydraulic mechanism.

5. To remove the trip piston assembly:
   A. Using a wire hook, raise the check-valve ball seat out of the underside of the casting to expose the tension spring which is part of the trip-piston assembly.
   B. Insert a thin metal plate through the spring to release the spring tension on the ball-seat pin as shown in Figure 17.
   C. Remove the ball-seat pin to disengage the spring and free the ball seat.
      NOTE: The steel ball inside the seat is free to drop out. Handle carefully to prevent nicking or scratching.
   D. Withdraw the thin plate from the spring and remove trip-piston assembly.

The disassembled hydraulic-mechanism components are shown in Figure 18.

Thoroughly clean all parts and carefully inspect for nicks, scratches, or other damage. Include pump piston and plunger in the inspection. Replace as necessary.

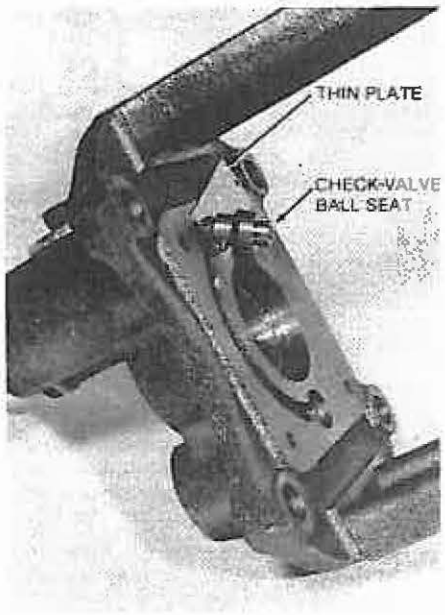

Figure 17.
Releasing spring tension on check valve ball seat pin.

TO REASSEMBLE THE HYDRAULIC MECHANISM:

1. Reinstall the control-valve assembly and the timing plate and gasket. Make sure the small hole in the timing-plate gasket is positioned over the indexing pin and the large hole is positioned over the orifice in the casting. Check that the plate is indexed to the proper timing curve (check data plate on sleet hood for proper timing curves).
2. Replace the trip-piston assembly:
   A. Install the trip piston into its cylinder.
      NOTE: If the operating sequence of the recloser is to be changed, make changes to trip-piston assembly before installing. See Timing Mechanism section, page 12.
   B. Using a wire hook, pull out spring through bottom of trip-piston cylinder and hold with a thin metal plate.
   C. Reinstall o-ring gasket on ball seat, replace check-valve ball, and pin the assembly to the spring (see Figure 17).
   D. Remove thin plate and seat check valve in place.
3. Reassemble solenoid plate and gasket to hold the ball-seat check valve in place. Reverse the solenoid-plate gasket when reassembling.
4. Insert slide valve and slide-valve spring into its cylinder and secure the fibre-gasket, slide-valve stop, and trip-piston stop with the appropriate attaching hardware. Check scribe marks made during disassembly to properly orient the slide-valve stop. Be sure holes in fibre gasket and slide-valve stop are aligned and centered over the slide-valve cylinder.
5. Test the check valve in the base of the pump piston.
   A. Holding the piston upside down, fill it with degreasing fluid or clean transformer oil.
   B. If the check valve does not hold, clean it thoroughly in degreasing fluid and repeat step A.
   C. If the check valve still does not hold, replace the entire pump-piston assembly.
6. To replace the pump-piston assembly:
   A. Note position of pump-piston shell with respect to the pump-link assembly.
   B. Unscrew shell far enough to expose the steel pin (see Figure 19).
   C. Push out pin and discard pump piston.
   D. Install new piston and replace the pump-piston shell in its original position.

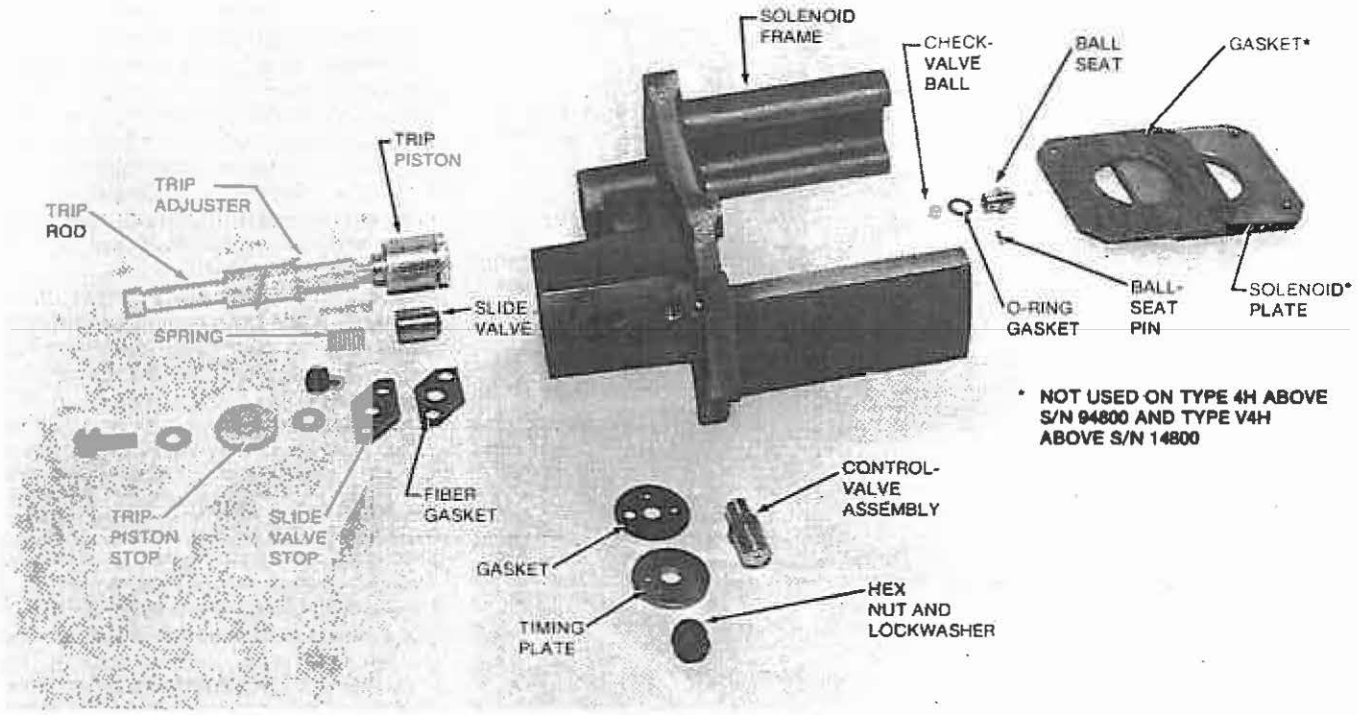

Figure 18.
Disassembled solenoid frame and hydraulic mechanism.

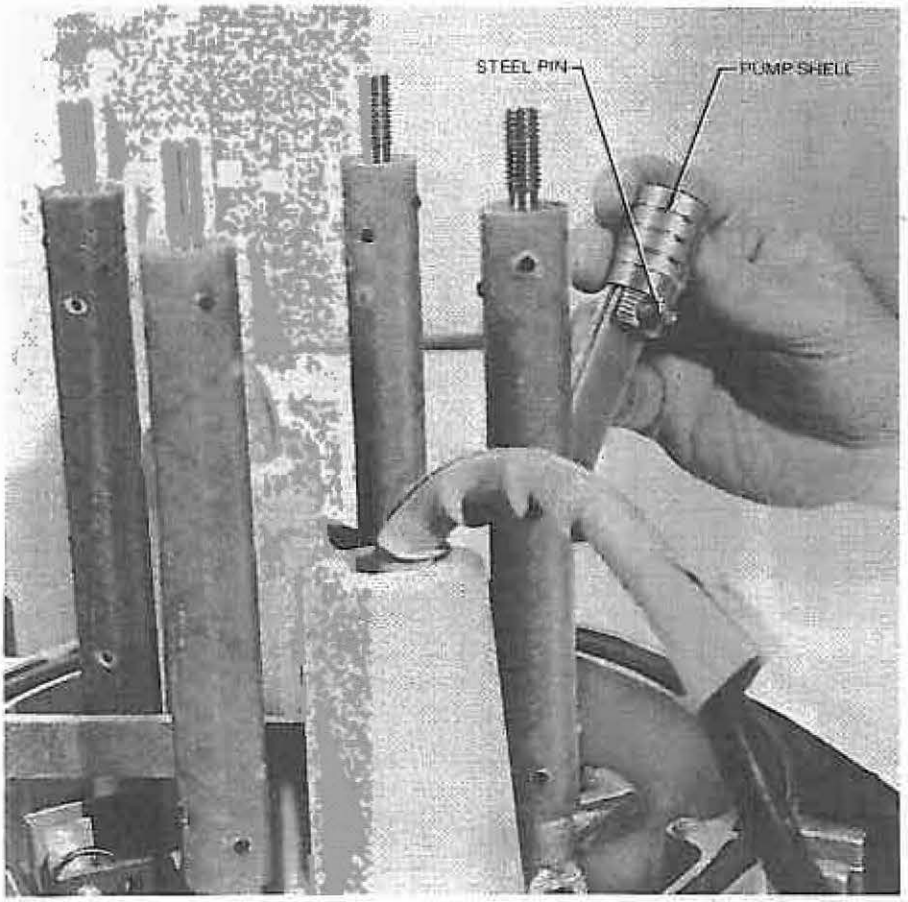

Figure 19.
Removing pump-piston shell to expose steel pin.

ADJUSTING NEW PUMP PISTONS

After installing a new pump piston, it may be necessary to adjust the pump-piston shell to obtain the correct number of operations to lockout. Turning the pump-piston shell to increase the effective length of the piston will cause the port in the pump cylinder to be covered earlier in the downward stroke of the pump. The quantity of oil escaping through this port is reduced and the amount of oil pumped to the trip-piston cylinder is increased. Turning the shell to decrease the effective length of the piston will cause the port to remain open during a greater part of the stroke. The quantity of oil escaping through the port is increased and less oil is pumped into the trip-piston cylinder. Proper position of shell is determined as follows:

1. Attach solenoid frame to support stringers. Make sure plunger and pump piston are inserted in their respective cylinders.
2. Install solenoid-coil assembly (see Solenoid Coil in this section).
3. Lower the mechanism into the oil until pump and trip pistons are completely covered.
4. Operate recloser manually. Close and trip mechanism, using the manual operating handle, a few times to remove the air trapped in the hydraulic system. Return operating handle to CLOSED position and allow trip piston to reset fully.

5. Manually open and close recloser three times if it is set for four operations to lockout. Observe trip rod—end of trip rod should touch lockout latch as shown in Figure 20.
6. To lengthen the travel of the trip rod, increase the effective length of the piston by unscrewing the piston shell a slight amount. The trip-rod travel is shortened by screwing the shell farther onto the piston. Adjust in one-half turn increments and repeat step 5.

Timing Mechanism and Operating Sequence

The operating sequence and timing of Types 4H and V4H reclosers is governed by the hydraulic system. The hydraulic system utilizes the surrounding insulating oil as an operating medium. The operating sequence and timing can be changed with the mechanism disassembled, during maintenance, or by untanking the recloser to gain access to the points of adjustment.

TIMING (FIGURE 21)

Provision is made for selecting an A characteristic, no intentional time delay, and a retarded B characteristic or an extra-retarded C characteristic. Choice of the B or C characteristic is made by indexing the timing plate to the appropriate hole (see Figure 21). Complete removal of the timing plate causes all operations of the recloser to have A characteristics.

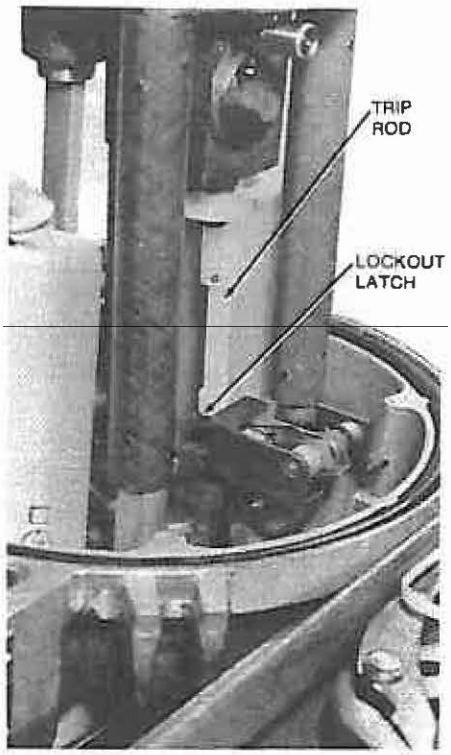

Figure 20.
Trip rod touching lockout latch.

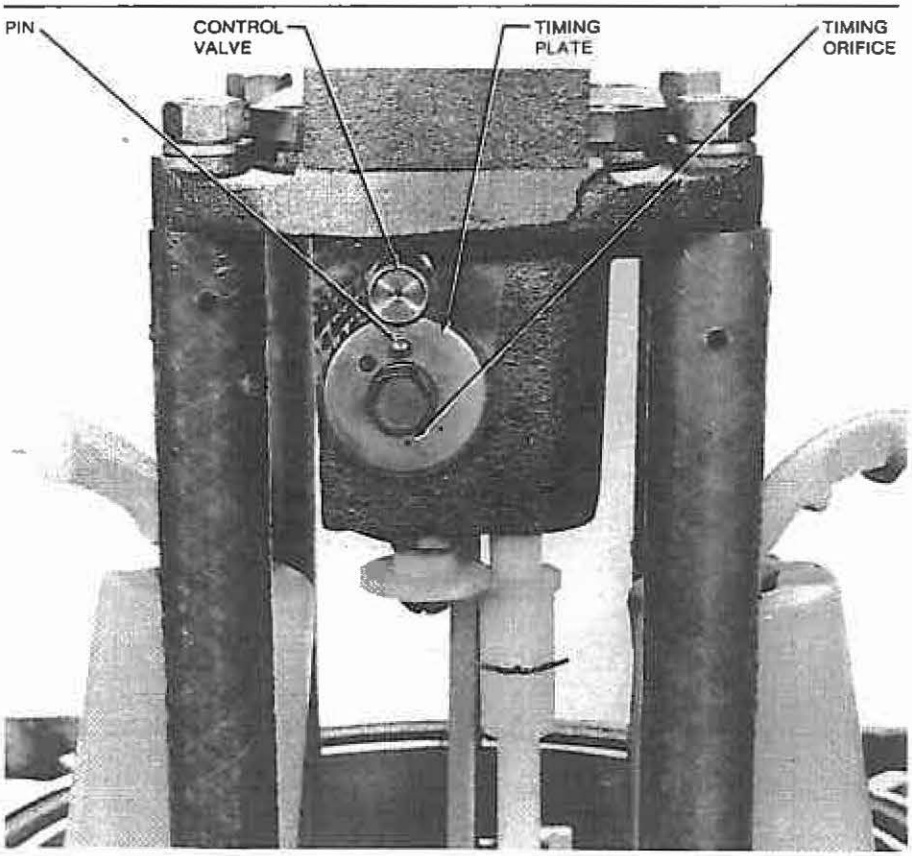

Figure 21.
Indexing of timing plate.

OPERATING SEQUENCE (FIGURE 22)

Two, three, or four operations to lockout are selected by positioning the trip rod to the appropriate hole in the trip adjuster and securing with a cotter pin. Figure 22 shows a recloser set for two fast and two retarded operations. One operation to lockout is selected by pulling down the non-reclosing lever, located under the sleet hood, which is provided as part of the non-reclosing accessory.

Selection of one, two, or three fast operations is made by positioning the trip adjuster to the appropriate hole in the trip piston and securing with a roll pin (see Figure 22).

NOTE: To gain access to the adjustment for fast operations when the recloser mechanism is assembled, pull out the trip rod until the top of the aluminum trip piston is exposed. Use a small, fiber wedge between the trip-piston assembly and the valve-stop plate to hold the trip piston extended while making changes in the number of fast operations. The trip adjuster should be backed by a solid metal object when the roll pin is being driven in or out.

A retarded characteristic for all four operations requires a special spacer above the slide valve and a special slide valve equipped with a timing orifice.

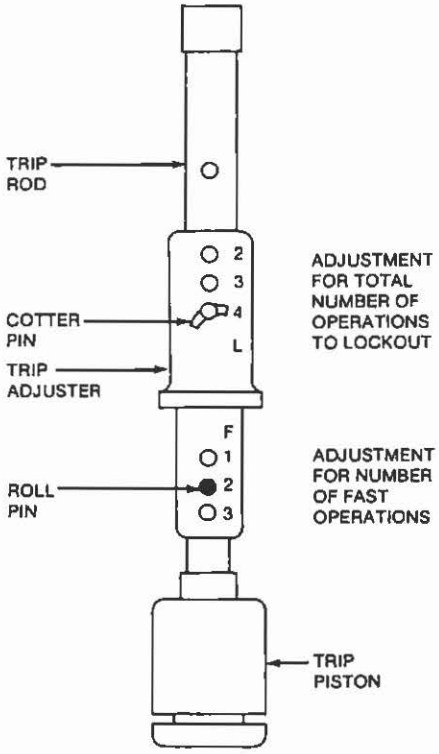

Figure 22.
Adjustments for number of operations to lockout.

HEAD ASSEMBLY

Normally, no maintenance will be required on the head assembly. If the head mechanism is to be disassembled, proceed as follows:

1. Make sure manual control level is in OPEN position. Then unhook lockout spring (see Figure 23).
2. Remove counter assembly by unscrewing two round-head mounting screws and remove sleet hood.
3. Using a drift punch, drive out reset-lever groove pin. Use new groove pin for reassembly.
4. Remove operating-handle spring. Remove two round-head screws to free toggle-trip lever from head casting.
5. Grasp pump piston and plunger in one hand and pull out operating handle and shaft assembly. Lift plunger and link assembly, reset lever, and toggle-trip-lever assembly from head casting.
6. To remove counter shaft and counter lever, drive out groove pin (see Figure 24).
7. To reassemble head mechanism, first replace counter lever, retaining ring, and counter shaft. Then slide operating-handle shaft through first support mounting boss.
8. Attach plunger and link assembly, making sure that plunger-lever pin extends over counter lever. Attach reset lever and toggle-trip lever to shaft and push shaft through second support-mounting boss. Secure toggle-trip lever to head casting with round-head screws. Be sure reset lever is under toggle-trip-lever pin as shown in Figure 23.
9. Drive in new groove pin from same side of the reset lever from which the groove pin was driven out. Because groove pins are tapered, small end must enter reset lever and pins must be driven in from the large end.
10. Install counter with mounting screws and attach sleet hood cover.

    NOTE: Each circuit interruption is recorded by the operation counter. When the counter shaft fails to raise the counter arm enough to register an operation, or if the counter stop is encountered before the unit closes, adjust as follows:

    A. With the counter removed, loosen the screw holding the counter arm in place (Figure 25).
    B. Move the counter arm slightly upward (if counter stop is encountered too soon) or slighly downward (if counter is failing to index and register a circuit interruption).
    C. Retighten the screw and reinstall counter.
    D. Check operation of the counter by slowly raising the closing handle. The counter should index (the ratchet should drop into the next groove position) before the recloser contacts close and the recloser contacts should close before the

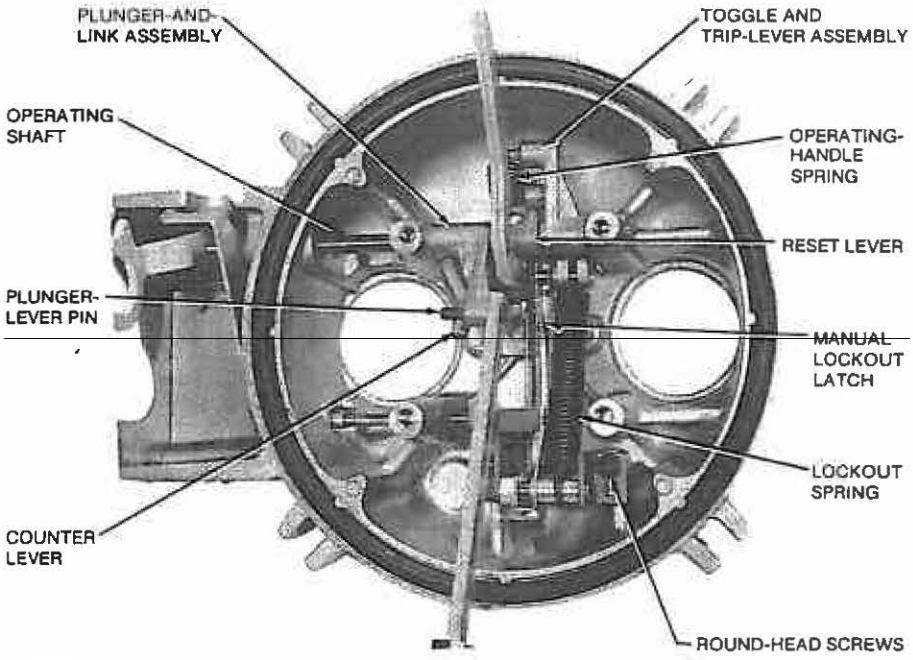

Figure 23.
Head assembly.

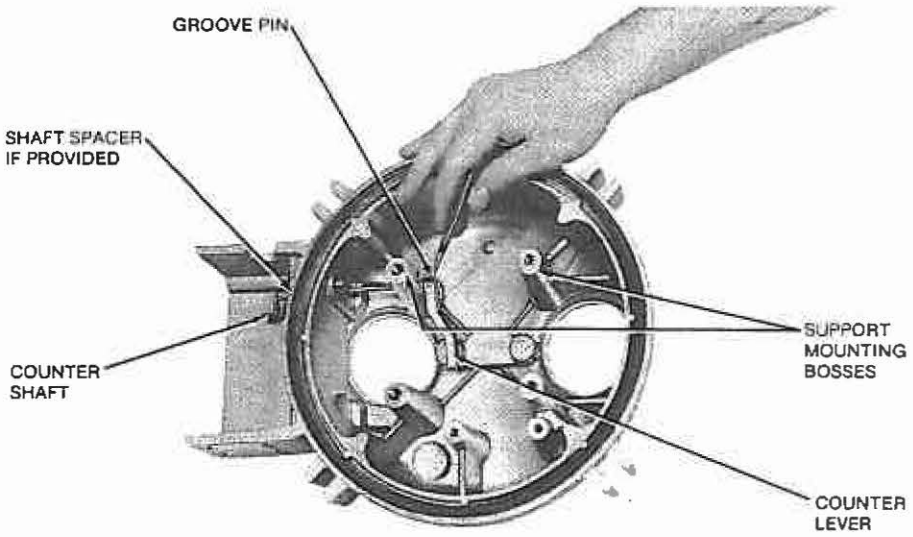

Figure 24.
Removing groove pin.

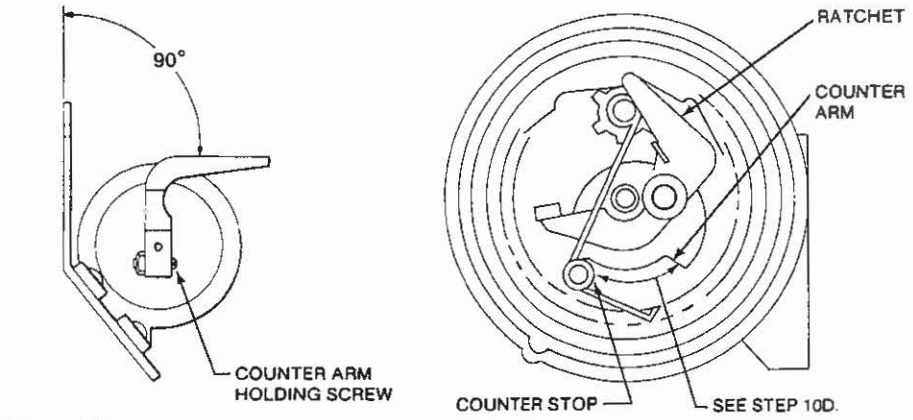

Figure 25.
Operation counter arm.

counter stop is encounter. (Hold the operating handle at the point where the recloser contacts just close. The counter arm should be able to travel another 3/32 in. (±1/32 in.) before the counter stop is hit.)

E If necessary, repeat the above steps.

CAUTION
If the counter stop is hit before the recloser contacts are closed, the recloser may fail to close.

11. Attach operating-handle spring and lockout spring.

RECLOSER MODERNIZATION Applicable to Type 4H Reclosers Below Serial No. 62966 and Type V4H Reclosers Below Serial No. 4491

During the past years of production, several product improvements have been incorporated into the design for reliability. For the Type 4H recloser, these design changes affect the contact-box assembly (85, Figure 26), the solenoid-frame assembly (57), and the plunger part of the plunger-and-link assembly (39). For the Type V4H recloser these design changes affect the plunger only.

It is recommended that applicable reclosers be modernized to incorporate these product improvements when they are next removed from service for routine maintenance.

Reclosers with serial numbers 4H/62966 and above and V4H/4491 and above include these design improvements and need not be modernized.

The amount of modernization required for any particular recloser will depend upon how long ago the recloser was manufactured and whether any of these improvements have already been incorporated, either in the field or at the factory.

The following descriptions will help the customer identify the amount of modernization required for each of his reclosers.

CONTACT BOX (TYPE 4H RECLOSER):
The width of the rectangular slots in the stationary contact chambers for entrance of the moving contacts have been enlarged from 1/4 in. to 5/16 in. to allow additional clearance for the moving contacts. Replace entire contact box assembly (KA4H4) if the slots measure less than 3/4 × 5/16 in.

SOLENOID FRAME ASSEMBLY (TYPE 4H RECLOSER):
The bridge plate (75, Figure 26) has been drilled and pinned to the solenoid frame (57) to improve plunger alignment. Return the entire solenoid frame and bridge plate assembly to the factory for proper alignment and drilling and pinning.

PLUNGER ASSEMBLY (TYPES 4H AND V4H RECLOSERS):
Design changes were made in the plunger and plunger stop to improve alignment and decrease bearing surfaces. This product improvement can be identified by the amount of lateral play in the guide rod of the plunger assembly. The lateral play has been reduced from approximately 1-3/4 in. to less than 1/8-in. as measured at the tip of the plunger guide rod.

A plunger and plunger stop field-installation kit (KA705H4-1) is available. Installation instructions are included with the kit.

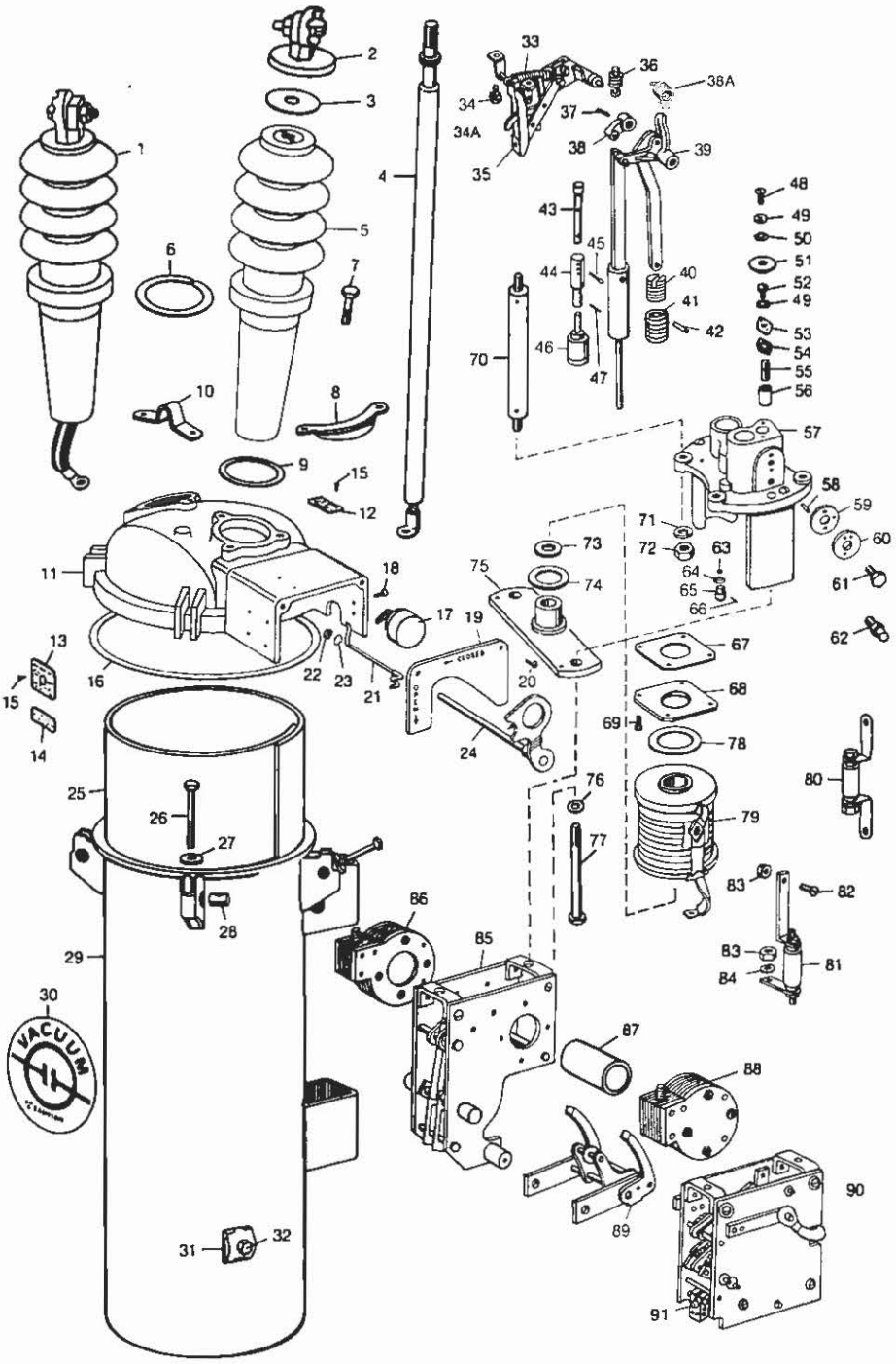

Figure 26.
Exploded view of Types 4H and V4H reclosers.

Service Parts List (Figure 26)

Item No.	Description	Catalog Number	Qty. Per Assy.
1	Bushing assembly, Type 4H		
	Standard creepage, short lead	KA234H41	1
	Standard creepage, long lead	KA234H42	1
	15-in. extra-creepage, short lead	KA234H43	1
	15-in. extra-creepage, long lead	KA234H44	1
	17-in. extra-creepage, short lead	KA234H45	1
	17-in. extra-creepage, long lead	KA234H46	1
	Bushing assembly, Type V4H		
	Standard creepage, short lead	KA234H47	1
	Standard creepage, long lead	KA234H48	1
	17-in. extra-creepage, short lead	KA234H49	1
	17-in. extra-creepage, long lead	KA234H50	1
	(Above include items 2 through 5)		
2	Terminal assembly	KA143L	2
3	Terminal gasket	KP2090A7	2
4	Short lead assembly, Type 4H		
	Standard creepage bushing	KA233H41	1
	15-in. extra-creepage bushing	KA233H5	1
	17-in. extra-creepage bushing	KA233H45	1
	Long lead assembly, Type 4H		
	Standard creepage bushing	KA233H42	1
	15-in. extra-creepage bushing	KA233H43	1
	17-in. extra-creepage bushing	KA233H64	1
	Short lead assembly, Type V4H		
	Standard creepage bushing	KA233H46	1
	17-in. extra-creepage bushing	KA233H47	1
	Long bushing lead, Type V4H		
	Standard creepage bushing	KA233H44	1
	17-in. creepage bushing	KA233H48	1
5	Bushing ceramic		
	Standard creepage	KP130VR	2
	15-in. extra-creepage	KP196VR	2
	17-in. extra-creepage	KP246VR	2
6	Bushing clamping ring	KP121L	2
7	Capscrew, hex hd, 3/8-16 × 1-5/8, stl	K730101137162Q	6
8	Bushing clamp	KP41L	6
9	Bushing gasket	KP2090A29	2
10	Lifting strap	KP439H	1
11	Replacement head casting assembly	KP700H4	1
12	Blank operating data plate	KP164H1	1
13	Nameplate, Type 4H	KP175H4	1
	Nameplate, Type V4H	KP1039V4H	1
14	Coil data plate	KP2119A15	1
15	Self-tapping screw, Type Z, rd hd, 2 × 3/16, sst	K751515102018A	6
16	Head gasket	KP2103A7	1
17	Counter assembly	KA28C01	1
18	Self-tapping screw, Type F, rd hd, 6-32 × 5/8, sst	K751515106062A	2
19	Cover plate	KP309H	1
20	Self-tapping screw, Type T, rd, hd,	K781515112050A	2
21	Counter lever and shaft assembly	KA186H	1
22	Flat washer, 10S, brass	K900525020043A	1
23	Retaining ring, Type C, 3/16, WA510	K970901188000A	1
24	Operating handle	KA121H	1
25	Tank liner	KP178H4	1
26	Capscrew, hex hd, 3/8-16 × 3, stl	K730101137300Q	4
27	Flat washer	KP2028A33	4
28	Head bolt retainer	KP3061A3	4
29	Tank assembly	KA10H4	1
30	Decal, for Type V4H	KP1041V4H	1
31	Ground clamp	KA227H	1
32	Capscrew, hex hd, 1/2-13 × 1, stl	K730101150100Q	1
33	Lockout spring	KP116H6	1
34	Capscrew, hex hd, 1/4-20 × 1/2, stl	K730101125050Q	2
34A	Split lockwasher, med, 1/4, stl	K900801025000Z	2
35	Toggle and lever assembly	KA205H1	1
36	Operating handle spring	KP95E	1
37	Groove pin, 1/8 × 5/8	KP2001A12	1
38	Reset lever assembly	KA11H	1
38A	Torsion spring (Type 4H above S/N 94800 and Type V4H above S/N 14800 only)	KP239H4	1
39	Plunger and link assembly	KA9H4	1
40	Pump piston replacement kit (includes item 41)	KA725H	1
41	Pump piston shell	KP151H	1
42	Pin	KP3055A1	1
	Solenoid frame and hydraulic mechanism assembly (includes items 43 through 69, and 75 through 77).		
	Type 4H above S/N 94800 and Type V4H above S/N 14800	KA6H4-1	1
	Type 4H below S/N 94800 and Type V4H below S/N 14800	KA6H4-2	1
43	Trip rod	KP216H4-1	1
44	Trip adjuster	KP215H4	1
45	Cotter pin, 1/16 × 1, stl	K970501062100A	1
46	Trip piston	KP17H4	1
47	Roll pin, 1/16 × 7/16, sst	K970815062043A	1
48	Machine screw, rd hd, 1/4-20 × 7/8, stl	K721501125087A	2
49	Split lockwasher, med, 1/4, stl	K900801025000A	1
50	Flat washer, 14S, brass	K900525026056A	1
51	Trip adjuster stop	KP231H4	1
52	Machine screw, rd hd, 1/4-20 × 1/2, stl	K721501125050A	1
53	Slide valve stop	KP110H4	1
54	Gasket	KP111H4	1
55	Spring	KP177H4	1
56	Slide valve		
	For combination fast and delayed trip sequences	KA16H4-2	1

(CONTINUED ON PAGE 16)

Parts List continued on page 16

Service Parts List (Figure 26) (continued)

Item No.	Description	Catalog Number	Qty. Per Assy.
56	CONTINUED		
	For BØ trip sequence	KA49H4	1
	For CØ trip sequence	KA51H4	1
57	Solenoid frame assembly (includes items 75, 76 and 77).		
	Type 4H above S/N 94800 and Type V4H above S/N 14800	KA5H4-1	1
	Type 4H below S/N 94800 and Type V4H below S/N 14800	KA5H4-2	1
58	Groove pin, 1/8 × 3/8	KP2001A3	1
59	Gasket		
	For KP112H4-2 timing plate	KP113H4	1
	For KP201H4 timing plate	KP202H4	1
60	Timing plate		
	For B and C curve operation	KP112H4-2	1
	For A Ø 4 operation	KP201H4	1
61	Preassembled capscrew and split lockwasher 5/16-18 × 1/2, stl	K830101113050L	1
62	Control valve	KA3H4	1
63	Ball, 1/4, sst	KP2025A2	1
64	Ball seat		
	Type 4H above S/N 25644 and all Type V4H	KP155H2	1
	Type 4H below S/N 25645	KP155H1	1
65	O-ring gasket (used with KP155H2 only)	KP2000A3	1
66	Pin	KP3051A3	1
67	Gasket (Type 4H below S/N 94756 and Type V4H below S/N 14761 only)	KP176H4	1
68	Solenoid plate (Type 4H below S/N 94756 and Type V4H below S/N 14761 only)	KP122H4	1
69	Machine screw, flt hd, 10-24 × 3/4 stl (used to attach KP122H4 solenoid plate)	K721601110075A	4
70	Insulating support assembly	KA18H4	4
71	Split lockwasher, med, 3/8, stl	K900801037000Z	4
72	Hex nut, 3/8-16, stl	K880201116037A	4
73	Impact washer	KP2090A31	1
74	Lower solenoid gasket	KP2090A60	1
75	Bridge plate (part of item 57, solenoid frame assembly)	—	1
76	Split lockwasher, med, 1/2, stl (part of item 57)	—	2
77	Capscrew, 1/2-13 × 5, stl (part of item 57)	—	2
78	Upper solenoid gasket		
	Type 4H above S/N 94800 and Type V4H above S/N 14800	KP2090A23	1
	Type 4H below S/N 94800 and Type V4H below S/N 14800	KP2090A55	1
79	Replacement coil kit (state coil rating as suffix to catalog number)		
	50 amps and below	KA83H-_____	1
	Above 50 amps	KA709H4-_____	1
80	Coil gap assembly for Type V4H	KA31H4	1
81	Coil gap assembly for Type 4H	KA100H	1
82	Preassembled brass screw and bronze split lockwasher, 5/16-18 × 5/8	K831567131062A	1
83	Hex nut, 5/16-18, brass	K881025118031A	2
84	Split lockwasher, med, 5/16, bronze	K900830031000A	1
85	Contact box assembly, complete, Type 4H (includes items 86 through 89)	KA4H4	1
86	Exhaust chamber	KA27H4	1
87	Cross blast tube	KP128H4	1
88	Generating chamber	KA26H4	1
89	Movable contact assembly	KA25H4	1
90	Contact box assembly, complete, Type V4H (includes item 91)	KA101V4H	1
91	Vacuum interrupter	KA116V4H	1

COOPER Power Systems

©2002 Cooper Industries, Inc.
Kyle® is a registered trademark of Cooper Industries, Inc.
NOVA™ is a trademark of Cooper Industries, Inc.

P.O. Box 1640
Waukesha, WI 53187
www.cooperpower.com

KMG
2/02

Printed on Recycled Paper

COOPER Power Systems

Reclosers

Service Information

S280-10-9

Types H, 4H, and V4H Maintenance Instructions

Type H • 50 A
Serial No. 246405 and above
Type 4H • 100 A
Serial No. 69276 and above
Type V4H • 200 A
Serial No. 7543 and above

87857KMA

Figure 1.
Type H Recloser

Contents

Safety Information 2
Product Information 3
Introduction 3
Description 3
Ratings and Specifications 4
Recloser Operation 5
Routine Maintenance 7
Periodic Maintenance Check 7
Oil Condition Check 9
Vacuum Interrupter Check 9
Testing 10
Mechanical Operation Test 10
Minimum-Trip-Current Test 10
Insulation Level Withstand Tests 11
Timing Characteristics Test 11
Shop Maintenance Procedures 12
Bushings 12
Contact Box Assembly 13
Solenoid Coil 15
Solenoid Frame and Hydraulic Mechanism 16
Timing Mechanism and Operating Sequence 19
Head Assembly 20
Service Parts List 23
Bushing and Tank Assemblies 23
Head Assemblies 25
Solenoid and Interrupter Assemblies 27

SAFETY FOR LIFE

Cooper Power Systems products meet or exceed all applicable industry standards relating to product safety. We actively promote safe practices in the use and maintenance of our products through our service literature, instructional training programs, and the continuous efforts of all Cooper Power Systems employees involved in product design, manufacture, marketing, and service.

We strongly urge that you always follow all locally approved safety procedures and safety instructions when working around high voltage lines and equipment and support our "Safety For Life" mission.

SAFETY INFORMATION

The instructions in this manual are not intended as a substitute for proper training or adequate experience in the safe operation of the equipment described. Only competent technicians, who are familiar with this equipment should install, operate, and service it.

A competent technician has these qualifications:

- *Is thoroughly familiar with these instructions.*
- *Is trained in industry-accepted high- and low-voltage safe operating practices and procedures.*
- *Is trained and authorized to energize, de-energize, clear, and ground power distribution equipment.*
- *Is trained in the care and use of protective equipment such as flash clothing, safety glasses, face shield, hard hat, rubber gloves, hotstick, etc.*

Following is important safety information. For safe installation and operation of this equipment, be sure to read and understand all cautions and warnings.

Hazard Statement Definitions

This manual may contain four types of hazard statements:

DANGER: Indicates an imminently hazardous situation which, if not avoided, will result in death or serious injury.

WARNING: Indicates a potentially hazardous situation which, if not avoided, could result in death or serious injury.

CAUTION: Indicates a potentially hazardous situation which, if not avoided, may result in minor or moderate injury.

CAUTION: Indicates a potentially hazardous situation which, if not avoided, may result in equipment damage only.

Safety Instructions

Following are general caution and warning statements that apply to this equipment. Additional statements, related to specific tasks and procedures, are located throughout the manual.

DANGER: Hazardous voltage. Contact with hazardous voltage will cause death or severe personal injury. Follow all **locally** approved safety procedures when working **around** high and low voltage lines and equipment. G103.3

WARNING: Before installing, operating, maintaining, or testing **this** equipment, carefully read and understand the contents of this manual. Improper operation, handling or maintenance can result in death, severe personal injury, and **equipment** damage. G101.0

WARNING: This equipment is not intended to protect human life. Follow all locally approved procedures and safety practices when installing or operating this equipment. Failure to comply may result in death, severe personal injury and equipment damage. G102.1

WARNING: Power distribution equipment must be properly selected for the intended application. It must be installed and serviced by competent personnel who have been trained and understand proper safety prodedures. These instructions are written for such personnel and are not a substitute for adequate training and experience in safety procedures. Failure to properly select, install or maintain power distribution equipment can result in death, severe personal injury, and equipment damage. G122.2

PRODUCT INFORMATION

Introduction

Service Information S280-10-9 covers the maintenance instructions for Types H, 4H, and V4H hydraulically controlled single-phase reclosers. This includes their general description, operating principles, and instructions for periodic inspection, testing, troubleshooting, and shop repairs. Service parts lists keyed to exploded-view drawings of the equipment are included at the back of the manual.

Read This Manual First

Read and understand the contents of this manual and follow all locally approved procedures and safety practices before installing or operating this equipment.

Additional Information

These instructions cannot cover all details or variations in the equipment, procedures, or process described nor provide directions for meeting every possible contingency during installation, operation, or maintenance. For additional information, please contact your Cooper Power Systems representative.

ANSI Standards

Kyle® reclosers are designed and tested in accordance with the following ANSI standards: C37.60 and 37.85 and ANSI Guide C37.61.

Quality Standards

The Quality System at the Cooper Power Systems, Kyle Distribution Switchgear plant is certified to the ISO 9001 standard.

GENERAL DESCRIPTION

The Types H, 4H (oil interrupting), and V4H (vacuum interrupting) reclosers are self-contained devices that sense and interrupt single-phase fault current on a distribution circuit. If the fault is temporary, the recloser automatically recloses to restore service. If the fault is permanent, the recloser will lock out after one, two, or three attempts to restore service, depending on its setting. Once locked out, the recloser must be manually reset to restore service.

Operating sequences of the recloser can be all fast, all slow, or a combination of fast operations followed by slow operations. Fast operations (no intentional delay in interrupting the circuit) are used to clear temporary faults before branch-line fuses are damaged. Slow operations (delay inversely proportional to the magnitude of the fault) are used to allow fault current to flow long enough to be cleared by branch-line fuses. Subsequent reclose restores service to the unfaulted portion of the circuit and confines outages to shorter sections of the line.

RATINGS AND SPECIFICATIONS

TABLE 1
Voltage Ratings

Nominal system voltage, kV RMS	14.4
Rated maximum voltage, kV RMS	
Type H	15.0
Types 4H and V4H	15.5
Rated impulse withstand voltage (BIL), kV crest	
Type H	95
Types 4H and V4H	110
60 Hz withstand, kV rms	
Dry, 60 seconds	
Type H	35
Types 4H and V4H	50
Wet, 10 seconds	
Type H	30
Type 4H and V4H	40
Reclosing time, seconds	
Type H recloser	1
Type 4H recloser	1-1/2
Type V4H recloser	1-1/2
Bushing creepage distance, mm (in)	
Type H	264 (10.25)
Type 4H and V4H	276 (10.75)

TABLE 2
Current Ratings

Recloser	Trip Coil Ratings Continuous (A)	Minimum Trip Ratings (A)	Interrupting Ratings (RMS symmetrical amps) 2.4 through 14.4 kV		
Type H 50 A max	5	10	125		
	10	20	250		
	15	30	375		
	25	50	625		
	35	70	875		
	50	100	1250		
			4.8 kV	8.32 kV	14.4 kV
Type 4H 100 A max	5	10	200	200	200
	10	20	400	400	400
	15	30	600	600	600
	25	50	1000	1000	1000
	35	70	1400	1400	1400
	50	100	2000	2000	2000
	70	140	2800	2500	2000
	100	240	3000	2500	2000
Type V4H 200 A max	5	10	200	200	200
	10	20	400	400	400
	15	30	600	600	600
	25	50	1000	1000	1000
	35	70	1400	1400	1400
	50	100	2000	2000	2000
	70	140	3000	2500	2000
	100	200	3000	2500	2000
	140	280	3000	2500	2000
	200	400	3000	2500	2000

TABLE 3
Duty Cycle

Type	% Interrupting Rating	Maximum Circuit X/R Ratio	Number Unit Operations	Total Unit Operations
H	15-20	2	40	100
	45-55	4	40	
	90-100	8	20	
	15-20	2	32	
4H	45-55	5	24	68
	90-100	10	12	
	15-20	2	128	
V4H	45-55	5	96	272
	90-100	10	48	

RECLOSER OPERATION

Electrical operation of the recloser is initiated by the trip solenoid. The trip-solenoid coil is connected in series with the distribution circuit and protected from transient surges by a bypass gap. When the current through the coil approaches twice the continuous current rating of the coil, the increased magnetic field pulls the solenoid plunger down into the coil. As the plunger moves downward, it trips open the recloser contacts to interrupt the fault. The coil de-energizes, the plunger returns, and the contacts reclose to restore service. Up to a maximum of four such operations can be provided before the recloser locks out. It must then be manually reset before it can be put back in service.

The operating sequence of the Types H, 4H, and V4H reclosers is governed by a hydraulic system that utilizes the surrounding insulating oil in timing and counting operations. For a normal sequence of two fast operations followed by two slow operations, the hydraulic counting and timing system functions as follows.

First Operation

As the plunger is drawn down by the solenoid coil, the lower end trips the contact assembly to open the contacts. At the same time, the plunger displaces the oil in the plunger cylinder. The displaced oil raises the slide valve and escapes through a port above the trip piston (see Figure 2).

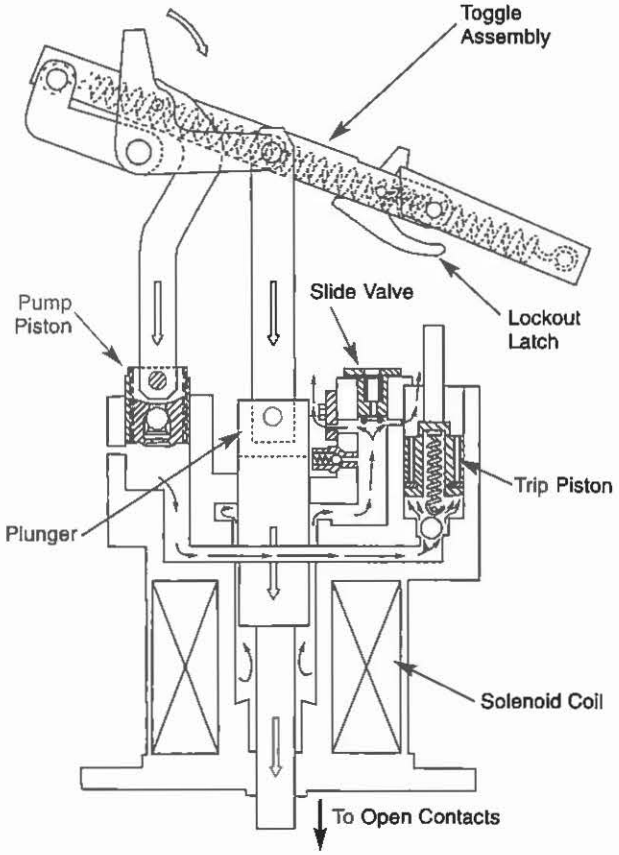

Figure 2.
Magnetic force of coil pulls plunger down.

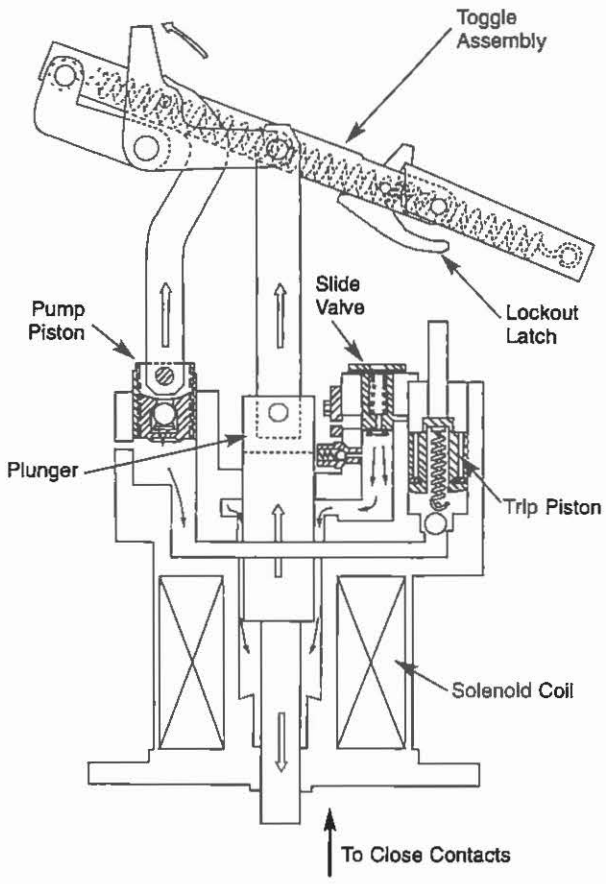

Figure 3.
Plunger returns to normal position.

The pump piston, connected to the plunger by a lever arrangement, also moves downward and forces a charge of oil under the trip piston. This charge displaces the trip piston a measured amount. A ball-check valve retains the charge in the trip piston. The quantity of oil in the charge can be regulated by changing the effective length of the pump piston.

Opening the contacts breaks the circuit and de-energizes the solenoid coil. Contact operating springs force the plunger back to its normal position and close the contact assembly. As the plunger moves upward (see Figure 3), oil is drawn back into the plunger cylinder, causing the slide valve to move down and block the port to the trip piston cylinder. Thereafter, oil flows slowly through the small port in the slide valve. This slow oil flow retards the return of the plunger to its normal position, causing a delay of 1 (Type H) or 1-1/2 (Type 4H or V4H) seconds before the contacts close.

Second Operation

If the fault still exists after the contacts close, the recloser recycles. This second operation is similar to the first, except the second charge of oil from the pump raises the trip piston high enough to block the escape port in the slide-valve cylinder.

Third Operation

If the fault still exists after the contacts close the second time, the recloser again recycles. During this third operation (see Figure 4), travel of the plunger down into the coil is impeded by the oil. Oil displaced by the plunger raises the slide valve, but it cannot flow out through the blocked escape port. The oil must flow around the plunger and through the orifice in the timing plate. Slowing the downward movement of the plunger causes a delay in opening the contacts to produce the retarded trip operation.

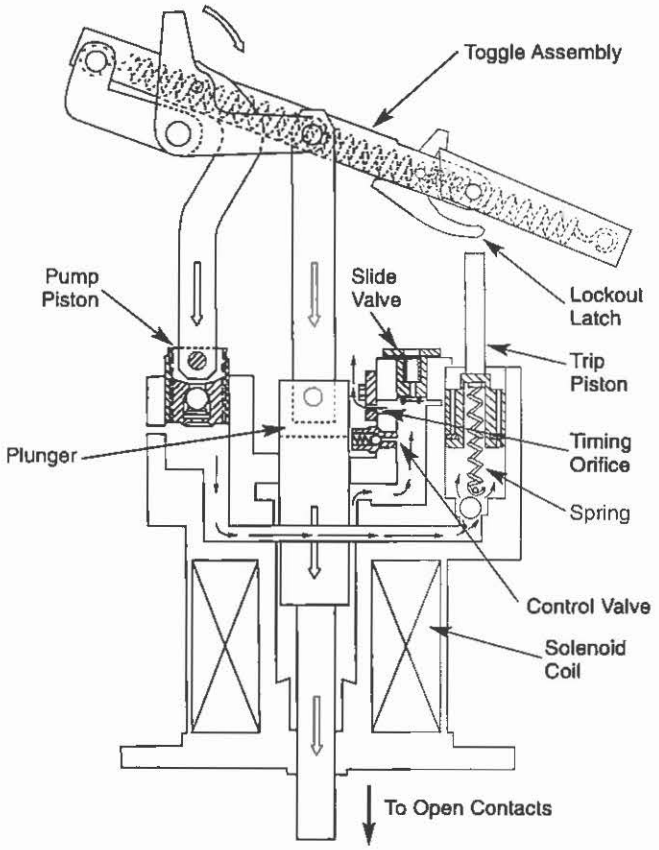

Figure 4.
Magnetic force pulls plunger down for third operation, which is retarded by blocked escape port.

If the fault current is high, enough pressure will be developed by the plunger to open the spring-loaded control valve in the trip-piston cylinder and provide an additional escape port for the oil. This produces the inverse time–current characteristic of the retarded trip operation.

As the plunger moves downward, a third charge of oil is forced under the trip piston, raising it another measured amount in its cylinder.

Fourth Operation

If the fault is still present after the third reclosure, the recloser performs a fourth operation. The fourth operation is a retarded trip operation similar to the third. However, the fourth charge of oil produced by the pump raises the trip piston the remaining distance required to trip the lockout latch (see Figure 5). This latch releases the toggle that holds open the contacts until the toggle is manually reset by operating the yellow operating handle on the recloser.

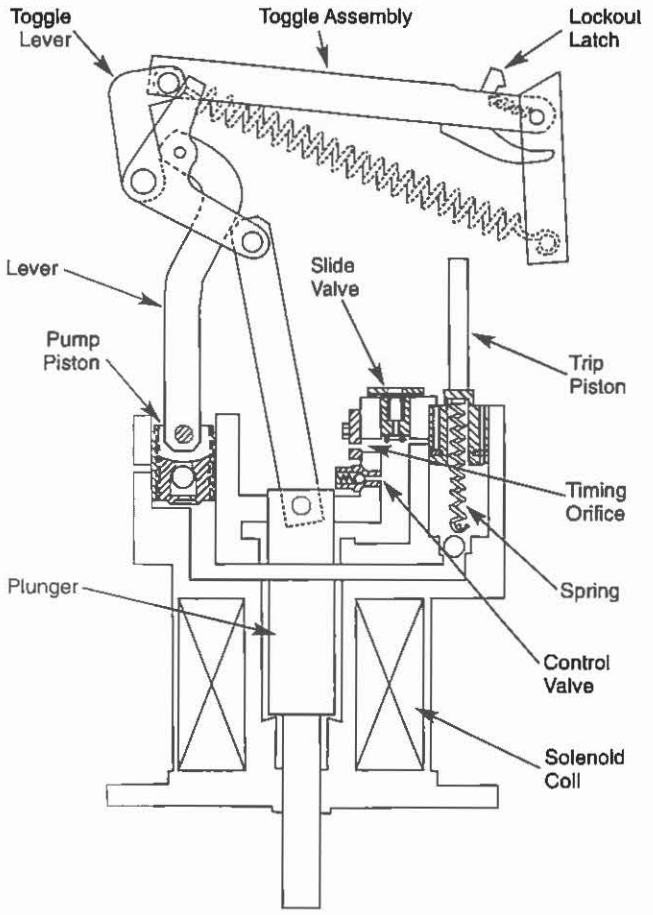

Figure 5.
Fourth operation causes lockout as trip piston strikes lockout latch.

During lockout, the trip piston, aided by its spring, settles to the bottom of its cylinder. The recloser is ready to perform another operating sequence as soon as the contacts are manually closed.

If a temporary fault clears before lockout, all mechanical operations cease after the contacts have closed on the first successful reclosure. The trip piston settles to the bottom of its cylinder, and the recloser is ready to start another operating sequence when a fault again occurs. Settling of the trip piston enables the recloser to "forget" that a temporary fault occurred. Settling time is approximately one minute per operation at a 25°C (77° F) ambient oil temperature.

ROUTINE MAINTENANCE

Periodic Maintenance Check

CAUTION: This equipment requires routine inspection and maintenance to ensure proper operation. If it is not maintained, it can fail to operate properly. Improper operation can cause equipment damage and possible personal injury. G105.1

CAUTION: This equipment relies on oil to provide electrical insulation between components. The dielectric strength of the oil must be checked on a regular basis, as part of the routine maintenance inspection, to ensure that it is at or above minimum dielectric requirements. Use of this equipment with insulating oil that does not meet minimum requirements can result in internal flashovers that will damage the equipment and can cause personal injury. G107.2

The frequency of maintenance depends upon local climatic and operating conditions; maintenance intervals are best determined by the user, based on actual operating experience. To assure proper and trouble-free operation, reclosers must be maintained when they have operated the equivalent of a rated duty cycle. Initially, a maintenance check should be made after three years of service or the completion of a standard duty cycle, whichever occurs first. Refer to Table 3 in the **Ratings and Specifications** section of this manual.

Note: ANSI C37.61, "Guide for the Application, Operation, and Maintenance of Automatic Circuit Reclosers," gives a procedure for converting the rated standard duty cycle into an equivalent duty cycle based on the actual operating duty of the recloser.

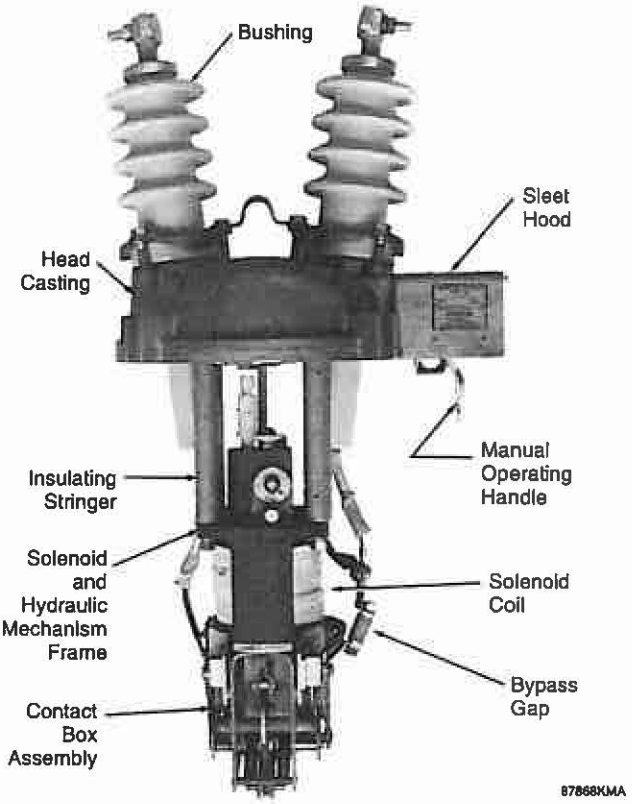

Figure 6.
Identification of major assemblies, Type H Recloser.

Maintenance Procedure

Each periodic maintenance check should include at least the following steps (see Figure 6):

1. Bypass and remove the recloser from service. To remove from service, close the bypass switch and open the disconnect switches. See Figure 7.

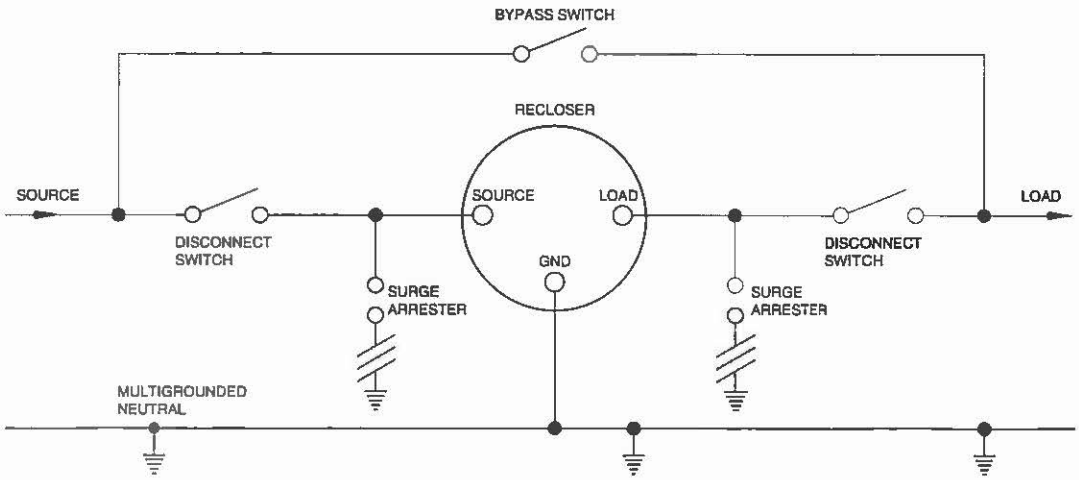

Figure 7.
Connection diagram.

2. Thoroughly clean exterior.
3. Inspect external components.
   - **A.** Check for broken or cracked bushings. Replace as necessary. (See the **Shop Maintenance Procedures** section of this manual.)
   - **B.** Check for paint scratches and other mechanical damage. Repair or replace as required.
   - **C.** Note counter reading and enter into the record log.
4. Perform an insulation level withstand test to check the insulation level of the recloser. See the **Insulation Level Withstand Tests** section of this manual.

CAUTION: Equipment damage. Recloser must be open (yellow operating handle, under sleet hood, down) before untanking. Tripping the mechanism out of oil will cause excessive mechanical shock to the operating mechanism, which will cause accelerated wear and/or damage to the mechanism. T202.0

5. Manually operate yellow handle until lockout is reached to verify that recloser is working properly. Leave the recloser in the open position.
6. Loosen bolts that secure head casting and remove mechanism from tank. (The gasket seal can be broken by carefully prying apart the head and tank.) Allow oil to drain off the mechanism.

CAUTION: Equipment damage. Never use volatile solutions, detergents, or water-soluble cleaners when cleaning the interior of this equipment. These cleaners will contaminate the insulating oil, reducing its dielectric strength. Operation with contaminated insulating oil can result in internal flashovers that will cause equipment damage and possible personal injury. T201.1

7. Clean all internal components.
   - **A.** Remove all traces of carbon by wiping with a clean, lint free cloth.
   - **B.** Flush mechanism with clean, dry transformer oil.
8. Remove bushings, clean, and inspect.
9. Replace all external seals and gaskets.
10. Inspect mechanism for cracks, carbon tracking, flashovers, or other damage. Repair or replace as required.
11. Inspect contacts and interrupting structures.

For H and 4H recloser:

- **A.** Slight pitting and discoloration can be dressed with polishing-grade sandpaper.
- **B.** Replace moving contacts and interrupting structures if they are severely eroded.

For V4H recloser:

See the **Vacuum Interrupter Check** section of this manual.

12. Inspect tank liners. Soft or spongy areas indicate that water has been absorbed. Replace liners if this condition exists. Locate the seam of the tank liner opposite the pole-mounting bracket, see Figure 8.

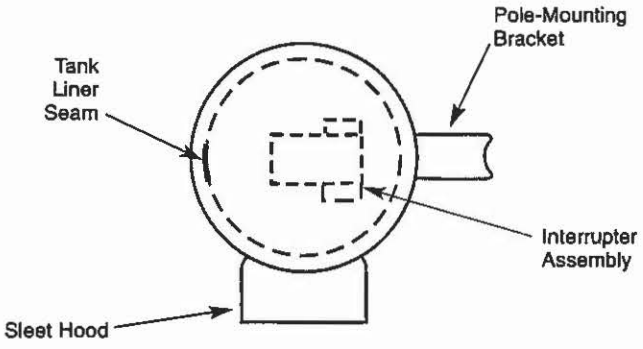

Figure 8.
Orientation of tank liner.

13. Check the dielectric strength of the insulating oil.
   - **A.** The dielectric strength should not be less than 22 kV when tested with a 2.5 mm (0.1 in.) gap in accordance with methods specified in ASTM D117.
   - **B.** Low dielectric strength usually indicates presence of water or carbon deposits.
14. If oil must be replaced, drain the tank and clean out all sludge or carbon deposits.
15. With the mechanism removed, fill the tank with clean insulating oil to level marked on tank liner. Capacity is approximately four gallons for Type H or five gallons for Types 4H and V4H. Use only new or like-new reconditioned insulating oil that conforms to the specifications in *Reference Data R280-90-1: Reclosers, Sectionalizers, Switches: Oil Specifications and Tests.*
16. Examine head gasket. Replace the o-ring gasket if it has taken a permanent set.
17. Replace the mechanism in the tank.
   - **A.** Replace the head bolts and torque to 15–22 N•m (11–16 ft•lb). Clamping forces must be applied gradually and equally, in rotation, to each bolt. This results in evenly distributed gasket sealing pressure.
   - **B.** Operate the recloser manually approximately eight times to expel all air from the hydraulic system.
   - **C.** See the **Testing** section of this manual; check for proper operation before returning recloser to service.

Oil Condition Check

CAUTION: This equipment relies on oil to provide electrical insulation between components. The dielectric strength of the oil must be checked on a regular basis, as part of the routine maintenance inspection, to ensure that it is at or above minimum dielectric requirements. Use of this equipment with insulating oil that does not meet minimum requirements can result in internal flashovers that will **damage** the equipment **and** can cause personal injury. G107.2

Oil plays an important role in the proper functioning of the recloser. It provides the internal insulation barrier from phase to ground, it acts as the timing and counting medium, and, in the H and 4H reclosers, it acts as an arc quencher. For effective recloser operation, the oil must be replaced before it deteriorates below a safe level. Oil that has been contaminated with carbon sludge or has a dielectric strength of less than 22 kV should be replaced.

New oil should always be filtered before using, even though it may be obtained from an approved source. Passing the oil through a blotter press will remove free water and solid contaminants, such as rust, dirt, and lint. When filtering the oil, aeration should be kept to a minimum to prevent moisture in the air from condensing in the oil and lowering its dielectric strength.

Used oil must be treated before reusing. Filtering may remove absorbed and free water and other contaminants to raise the dielectric strength to acceptable levels. However, filtering does not always remove water-absorbing contaminants and the dielectric strength of the oil may fall rapidly after being returned to service. Therefore, the recloser should be filled with new oil or oil that has been restored to like-new condition.

Vacuum Interrupter Check

CAUTION: Radiation. At voltages up to the specified test voltages, the radiation emitted by the vacuum interrupter is negligible. However, above these voltages, radiation injurious to personnel can be emitted. See *Service Information S280-90-1, Vacuum Interrupter Withstand Test Voltage Ratings Information* for further information. G109.2

CAUTION: Equipment damage. Never operate a vacuum recloser with a dc test source. The vacuum interrupters will be severely damaged if a dc arc interruption is attempted. T229.1

Vacuum Integrity

The following procedure may be used to check the vacuum integrity of the interrupter.

1. With the unit installed in its oil-filled tank, pull down the yellow operating handle to make sure the recloser is open.
2. Perform a high-potential test across the bushings of the open recloser at 37.5 kVac RMS.
3. The interrupter should withstand the specified test voltage for one minute.
4. Replace any interrupter failing to meet this test.

Contact Erosion

With the mechanism removed from its tank and the recloser closed (yellow operating handle up), measure the distance (see Figure 9) between the interrupter bracket and the larger diameter of the stepped shaft. If dimension is less than 21 mm (13/16 in.), the interrupter must be replaced.

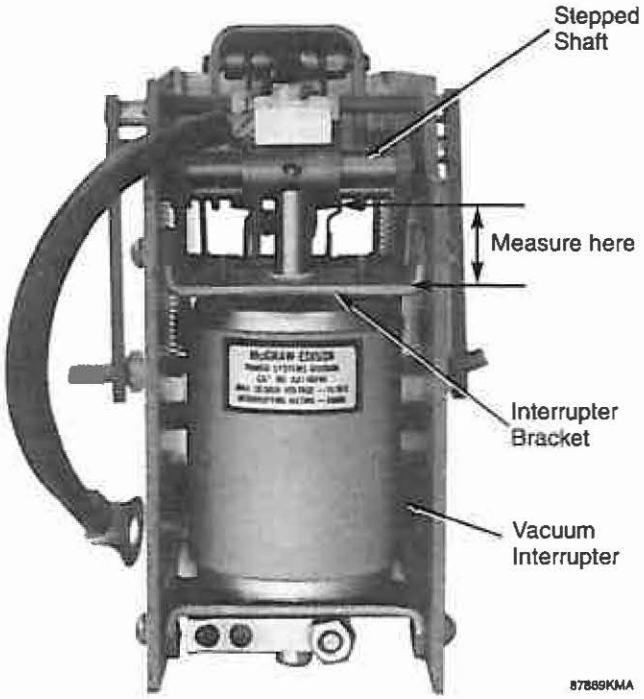

Figure 9.
Measurement of contact erosion, Type V4H.

TESTING

Following are several tests that can be performed to determine if a recloser is operating properly. For a more detailed explanation of testing procedures, refer to *Reference Data R280-90-2: Low Voltage AC Testing of Hydraulic Reclosers.*

Mechanical Operation Test

To check the number of operations to lockout and the number of fast and delayed operations, the following mechanical operation test can be performed. Perform this test using a suitable tester.

1. Move the yellow manual operating handle to the CLOSED position and wait at least six minutes to be sure the trip piston is fully reset.
2. Move the operating handle to the OPEN position and listen for the opening of the main contact. Move the handle to the CLOSED position and repeat this cycling until lockout occurs.
3. When lockout occurs, the yellow manual operation handle will not latch in the CLOSED position.

   NOTE: During fast operations, the contacts open immediately after the handle is moved to the OPEN position. on delayed openings, a noticeable slowing of handle movement can be observed until contacts open.

4. The number of fast and delayed operations should match the data plate specifications. If the sequence does not match, check to see if the recloser is correctly configured. If the configuration is correct, the problem may be either a misadjusted pump piston or an oil leak. Inspect the upper coil gasket and replace it if damaged or worn. Repeat the test.
5. If the sequence is still not correct, the pump piston needs to be adjusted or replaced. To adjust, the recloser will have to be disassembled to remove the solenoid frame. Drill out the stake punch in the pump piston shell (Figure 10).

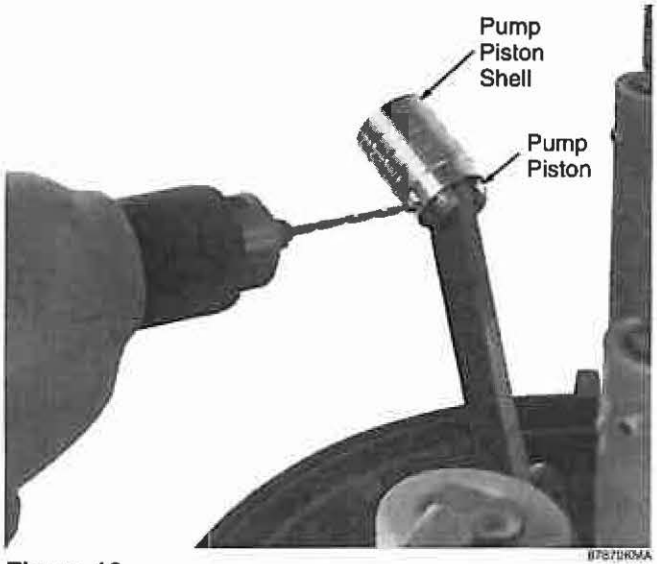

Figure 10.
Drilling out stake punch in pump piston shell.

   A. If the recloser is performing too many operations to lockout, turn the piston shell counterclockwise a little off the pump piston (Figure 11).
   B. If the recloser is performing too few operations to lockout, turn the piston shell clockwise a little, onto the pump piston (Figure 11).

   Assemble the recloser. Continue to test and adjust the pump piston shell until the proper sequence is performed. Then stake the piston to prevent it from moving.

6. If adjustments to the pump piston do not provide the proper sequence, the pump piston shell may be worn. Replace the shell and repeat the test and adjustment procedures.

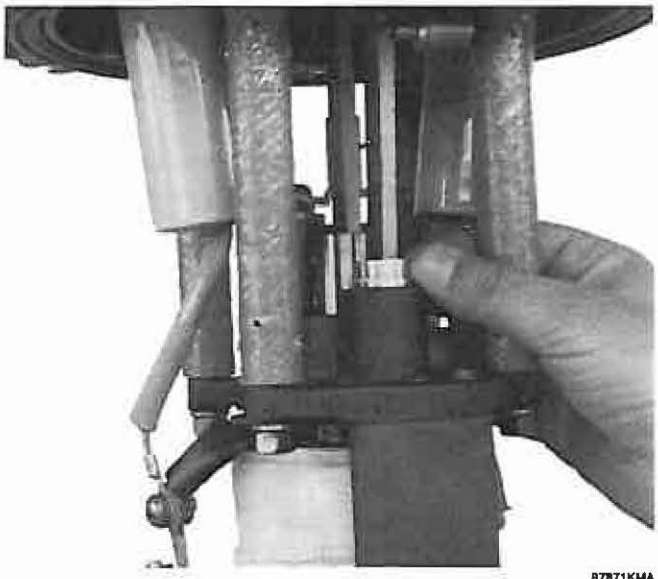

Figure 11.
Pump piston shell adjustment.

Minimum-Trip-Current Test

To perform the minimum-trip-current test:

1. Connect a low-voltage variable-current source to the recloser terminals as shown in Figure 12.
   A. Ratio and kVA size of the transformer (T1) will depend upon the size of the recloser trip coil.
   B. Table 4 shows the test voltage and kVA requirements for all ratings of the recloser.
2. Close the recloser by moving the yellow operating handle to CLOSE. Wait at least six minutes to make sure the trip piston is completely reset.
3. Slowly raise the variable-autotransformer voltage from zero. As the trip-solenoid plunger starts to move, the trip coil impedance will rise, causing a decrease in current flow. The maximum current reading taken just before the current begins to decrease is the minimum pickup value.

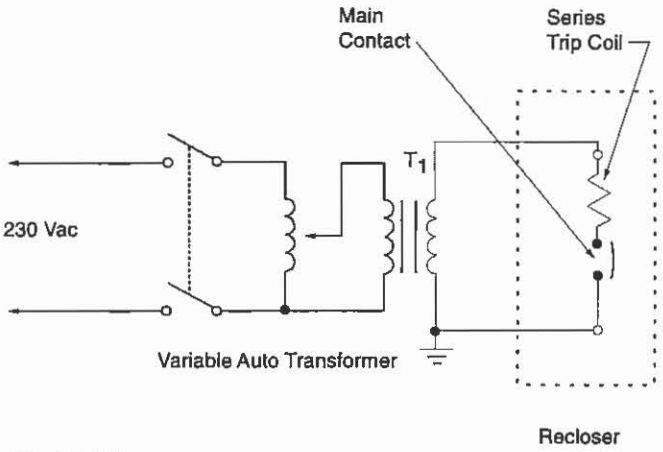

Figure 12.
Test circuit diagram.

Insulation Level Withstand Tests

CAUTION: Radiation. At voltages up to the specified test voltages, the radiation emitted by the vacuum interrupter is negligible. However, above these voltages, radiation injurious to personnel can be emitted. See *Service Information S280-90-1, Vacuum Interrupter Withstand Test Voltage Ratings Information* for further information. G109.2

High-potential withstand tests provide information on the dielectric condition of the recloser. Perform the high-potential test in a suitable test cage at 75% of the rated low-frequency withstand voltage. Table 1 shows the dry, one minute, 60 Hz withstand voltage rating for each recloser. Test the recloser at the applicable voltage for 60 seconds in each of the following configurations:

TEST 1:

1. Manually close main contacts.
2. Ground recloser tank and head.
3. Apply test voltage to one bushing.

TEST 2:

1. Open main contacts.
2. Ground recloser tank, head, and one bushing.
3. Apply test voltage to opposite bushing.
4. Reverse the bushing connections, and apply test voltage.

TEST RESULTS: These high-potential withstand tests provide information on the dielectric condition of the recloser and the integrity of the interrupter.

A. If the recloser fails the closed-contact test (Test 1), the cause may be a diminished electrical clearance, low oil dielectric strength, or failed insulation. Inspect the recloser to identify and correct the problem. Repeat the test.

B. Recloser failure in either open contact test may be caused by a deterioration of the interrupter. Replace the interrupter assembly and repeat the test.

Timing Characteristics Test

CAUTION: Equipment damage. Never operate a vacuum recloser with a dc test source. The vacuum interrupters will be severely damaged if a dc arc interruption is attempted. T229.1

Timing characteristics should be compared to the published time–current curves for the coil and recloser being tested. Timing characteristics should be within 10% (time or current, whichever is greater) of the published curves.

Note: Refer to the instructions supplied with the tester for additional specific test procedures.

Table 4 shows test voltage and kVA requirements. As the solenoid plunger is drawn into the series trip coil, the impedance of the coil rises sharply. To avoid inaccurate times while testing timing characteristics, the power source must provide four times (4x) the continuous current rating of series trip coil/recloser being tested.

TABLE 4
Recloser Test Circuit Power Requirements for Minimum-Trip-Current Test

Recloser	Current Coil	Coil X_L (4 x Coil Rating)	(Plunger Up)	Series R (Ohms)	Voltage† Required	Test kVA‡ (Short Time)
H,4H, V4H	5	20	7.48	37.4	750	15
	10	40	1.88	9.4	376	15.1
	15	60	.814	4.06	244	14.6
	25	100	.297	1.49	149	14.9
	35	140	.158	.79	111	15.6
	50	200	.073	.365	73	14.6
	70	280	.039	.195	55	15.4
	100	400	.020	.100	40	16.0
V4H	140	560	.011	.055	30.8	17.2
	200	800	.005	.025	20	16.0

† Voltage calculations simplified. Found by multiplying current by added series resistance. Coil impedance, source impedance, and test lead resistance neglected, so actual voltage required is greater.

‡ Test kVA shown found by multiplying current by voltage. Since voltage is actually somewhat greater, kVA is also greater. Test intervals are short so transformer rating can be smaller if short-time rating equals values shown in table.

If the times fall outside the published range, the problem may be a misadjusted pump piston, an oil leak, or worn parts.

1. If all the delayed times are too short, inspect the solenoid coil and seals. Replace any worn or damaged parts.
2. If one delayed time is too short or one fast time is too long, the pump piston may need adjustment. Refer to the **Mechanical Operation Test** section of this manual for the proper adjustment procedures.

   Note: Adjustments made to the pump piston to effect timing will also effect the sequence of operation.

If proper timing cannot be achieved through adjustment of the pump piston, the problem may be either worn parts or improper configuration. Double check the timing adjustment or replace components, as required, and repeat the test.

SHOP MAINTENANCE PROCEDURES

The operations described in this section should be performed under the cleanest conditions possible. The repair work, except for bushing replacement, will be simplified if the work bench is arranged so the mechanism can be inverted (bushings down). No special tools are required for any of the repair procedures.

Bushings

CAUTION: Bushing damage. The split aluminum ring must be replaced if damaged. The clamping ring cushions and distributes the pressure between the bushing flange and the bushing. If bushing clamps are assembled without a new clamping ring, the bushing may be damaged when clamp hardware is tightened. T234.1

CAUTION: Dielectric Failure, Bushing Damage. To prevent gasket leaks or bushing damage, clamping force must be applied gradually and equally in rotation to each bolt. If the clamping force is not evenly applied, seal leakage can result, compromising the dielectric capabilities of the recloser and can cause possible personal injury. Unequal **clamping** force can cause bushing breakage. T235.2

Bushing maintenance generally consists of cleaning the bushings thoroughly and examining them carefully for cracks while the recloser is untanked for servicing. Cracked or broken bushings must be replaced.

A bushing can be replaced with the recloser either tanked or untanked. The following criteria should be used as a guide:

A. If the bushing has been damaged in service or while in storage, the recloser should be untanked. Water or other contaminants may have entered the tank (check the tank liner and test the condition of the oil), the bushing lead could be damaged (either mechanical damage or from flashover), or pieces of porcelain may be in the tank.

B. If the bushing porcelain is accidentally chipped during installation or maintenance and it is obvious that no other damage has been done, it is not necessary to untank the recloser to replace the bushing porcelain.

Replacing Bushing Assembly with the Recloser Untanked

CAUTION: Equipment damage. Recloser must be open (yellow operating handle, under sleet hood, down) before untanking. Tripping the mechanism out of oil will cause excessive mechanical shock to the operating mechanism, which will cause accelerated wear and/or damage to the mechanism. T202.0

1. Untank the recloser and disconnect the appropriate bushing lead.
   A. The long lead is disconnected at the arc-interrupting structure.
   B. The short lead is disconnected at the solenoid coil.
2. Remove the three hex-head capscrews and the bushing clamps securing the bushing to the head casting, and lift the entire bushing assembly up through the head. Discard the gasket between the bushing and the head casting.
3. Twist the aluminum clamping ring and remove it from the old bushing porcelain. If the ring is in good condition, install it on the new bushing porcelain. If the old ring is damaged, a new clamping ring must be installed. The clamping ring cushions the pressure between the bushing and the bushing clamps and should not be omitted.
4. Replace the bushing assembly. Use a new gasket between the bushing flange and the head casting.
5. Position the aluminum clamping ring with the split in the ring centered between two clamping bolts.
6. Replace the bushing clamps and tighten the capscrews evenly, a little at a time. Clamping torque should not exceed 8–14 N•m (6–10 ft•lb).
7. Reconnect the bushing lead.

Replacing Bushing Porcelain with the Recloser Tanked

1. Unscrew the bushing terminal and discard the terminal gasket.
2. Remove the three hex-head capscrews and the bushing clamps, lift the porcelain from the head casting, and discard the old gasket.
3. Transfer the aluminum clamping ring from the old porcelain to the new porcelain. (Replace the ring if damaged.)
4. Install a new gasket between the porcelain and the head casting.
5. Tie a string to the lead, thread it through the bushing, and pull the lead through the porcelain as the porcelain is inserted into the head casting. Pull the lead until the locking key is seated.
6. Install a new terminal gasket and screw the terminal onto the lead.
   Note: Apply a very small amount of petrolatum jelly to the knurled surface of the inside face of the terminal before assembly to the bushing rod.
7. Position the aluminum clamping ring with the split in the ring centered between two clamping bolts.
8. Replace the bushing clamps and tighten the capscrews evenly, a little at a time. Clamping torque should not exceed 14 N•m (10 ft•lb).
9. Tighten the bushing terminal to 27–34 N•m (20–25 ft•lb).

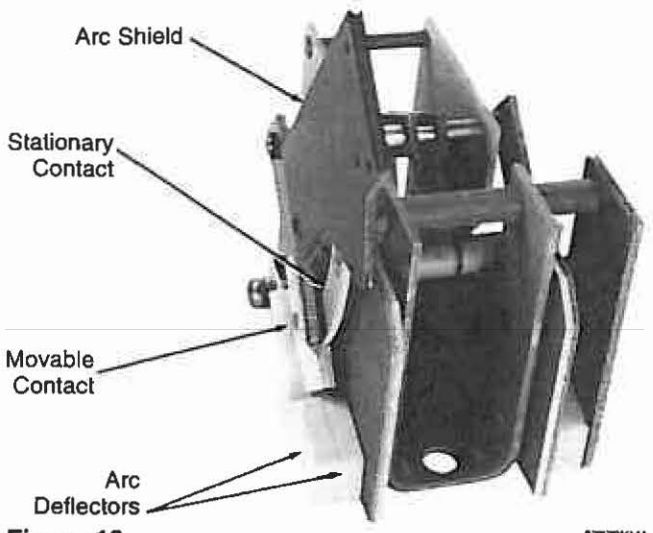

Figure 13.
Type H contact-box assembly.

Contact-Box Assembly, Type H Recloser

Fault current is interrupted in minimum time by the arc-interrupting structure. Circuit opening is provided by a double, spring-loaded, moving contact assembly, see Figure 13.

Inspect contact assembly and be sure contacts completely close.

To Clean Contacts

If contacts are rough and carbonized, clean as follows:

1. Disconnect two leads from arc-interrupting structure.
2. Remove two screws from arc shield, and swing shield upward.
3. Remove both arc deflectors.
4. Lift movable contact, and clean both contacts with crocus cloth.
5. Reassemble arc-interrupting structure by reversing steps 2 and 3.
6. Clean other set of contacts in same manner.

To Replace Contact-Box Assembly

If contacts are badly burned or do not close completely, arc-interrupting structure should be replaced. Proceed as follows:

1. Disconnect two leads from arc-interrupting structure.
2. Remove two hex nuts and washers holding interrupting structure in place.
3. Note position of interrupting structure with respect to pump piston. Lift off interrupting structure.

To Install the Contact-Box Assembly

NOTE: If further maintenance is to be performed at this time, do not reinstall arc-interrupting structure.

1. Lock in the operating mechanism by closing the yellow operating handle.
2. Install the contact-box assembly and secure with the two hex nuts and washers.
3. Reconnect the coil lead and bypass gap to one side of the interrupting structure.
4. Reconnect the long bushing lead to the other side of the structure.
5. Manually open and close the mechanism several times to check the operation of the arc-interrupter assembly.

Contact-Box Assembly, Type 4H Recloser

Fault current is interrupted by an oil-quenched arc-interrupting structure consisting of two interrupting chambers connected by a cross-blast tube. Circuit opening is accomplished by a double, spring-loaded, moving contact assembly arranged to provide two breaks in series. As the contacts open, gas pressure generated by the arc in the closed generating chamber forces cool oil against the arc in the vented exhaust chamber, rapidly deionizing the arc path and interrupting the current.

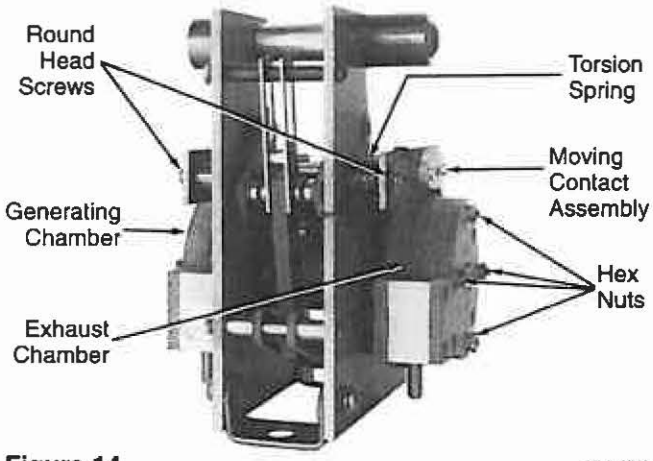

Figure 14.
Type 4H contact-box assembly.

If contacts are badly burned or do not close completely, both interrupting-chamber assemblies, the cross-blast tube, and the moving-contact assembly must be replaced. Proceed as follows (see Figure 14).

To Remove the Contact-Box Assembly

CAUTION: Equipment damage. Recloser must be open (yellow operating handle, under sleet hood, down) before untanking. Tripping the mechanism out of oil will cause excessive mechanical shock to the operating mechanism, which will cause accelerated wear and/or damage to the mechanism. T202.0

1. The main contacts should be open to remove the contact box to prevent inadvertent operation.
   - **A.** To open contacts while the mechanism is tanked, pull down the yellow operating handle.
   - **B.** To open the contacts after the mechanism is untanked, securely hold the yellow operating handle in the closed position, trip the lock-out latch (see Figure 25), and then slowly release the yellow operating handle.

2. Disconnect the long bushing lead from one side of the interrupter structure.
3. Disconnect the coil lead and bypass gap from the other side of the interrupter structure.
4. Remove the two hex-head bolts that secure the arc-interrupting structure to the solenoid frame and remove the structure.
5. Holding the moving contacts open, loop a light cord to the contact spring at the end farthest from the cross-blast structure (see Figure 15) and unhook both springs. Do not stretch the springs any further than required for removal.

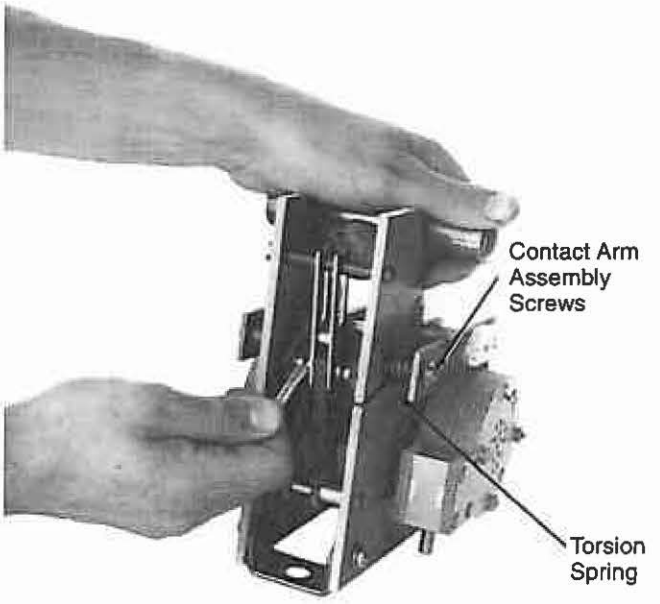

Figure 15.
Releasing contact springs.
87B74KMA

6. Unhook the torsion spring and remove the two round-head screws, lockwashers, flat washers, and pivot bearings to free the moving contact arm assembly. Remove the assembly.

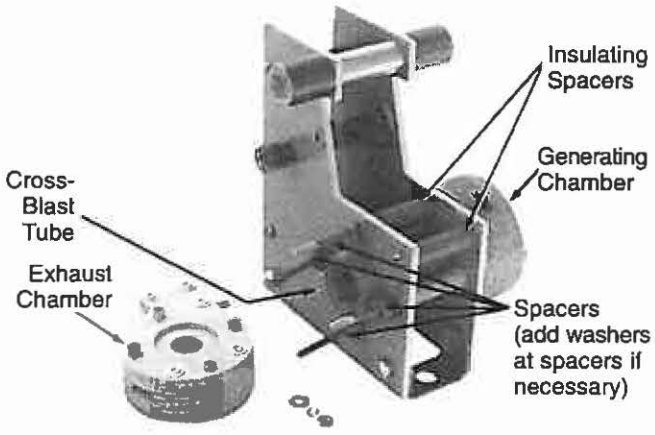

Figure 16.
Partially assembled contact-box.
87B75KMA

7. Remove the four hex nuts, lockwashers, and flat washers that secure the exhaust and generating chambers to the contact-box assembly and remove both chambers by sliding them off the mounting bolts. Figure 16 shows the exhaust chamber removed from the contact-box assembly. Note the position of the insulating spacers.
8. Remove the cross-blast tube. Remove and save the fiber dowel before discarding the tube.

To Reassemble the Contact-Box Assembly

1. Assemble the fiber dowel to the new cross-blast tube and install the tube into the contact box. Make sure the dowel is secured in the notch on the side plate.
2. Assemble the interrupting chambers and the moving contact assembly by reversing Steps 5, 6, and 7 above.

   NOTE: After reassembling the contact-box assembly, check for completely free entry of the moving contacts into the stationary-contact housing. Use No. 10 plain brass washers to adjust the position of the stationary-contact housing with respect to the moving contact (see Figure 14).

To Install the Contact-Box Assembly

NOTE: If further maintenance is to be performed, do not install the arc-interrupting structure.

1. Lock in the operating mechanism by closing the yellow operating handle.
2. Install the contact-box assembly and secure with the two hex-head bolts.
3. Reconnect the coil lead and bypass gap to the generating chamber.
4. Reconnect the long bushing lead to the exhaust chamber.
5. Manually open and close the mechanism several times to check the operation of the arc-interrupter assembly.

Vacuum Contact-Box Assembly, Type V4H Recloser

Current is generally interrupted in less than 1/2 cycle by the vacuum interrupter. Circuit opening is accomplished by a spring-loaded contact assembly operating in a high-vacuum chamber.

When the vacuum interrupter is to be replaced because of contact wear, replace the entire contact-box assembly. If, however, replacement is required because of vacuum interrupter failure (physical damage, loss of vacuum), the vacuum interrupter only can be replaced. See Figure 17.

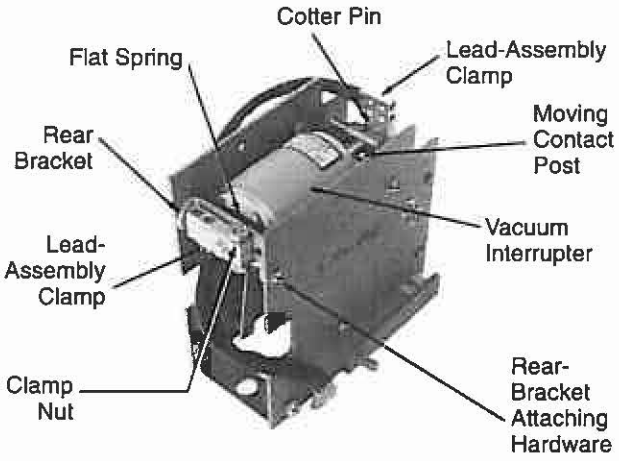

Figure 17.
Type V4H vacuum contact-box assembly.

To Replace the Entire Vacuum Contact-Box Assembly

CAUTION: Equipment damage. Recloser must be open (yellow operating handle, under sleet hood, down) before untanking. Tripping the mechanism out of oil will cause excessive mechanical shock to the operating mechanism, which will cause accelerated wear and/or damage to the mechanism. T202.0

1. The main contacts should be open to remove the contact box to prevent inadvertent operation.
   - **A.** To open contacts while the mechanism is tanked, pull down the yellow operating handle.
   - **B.** To open the contacts after the mechanism is untanked, securely hold the yellow operating handle in the closed position, trip the lock-out latch (see Figure 25), and then slowly release the yellow operating handle.
2. Disconnect the long bushing lead from one side of the interrupter structure.
3. Disconnect the lower coil lead and bypass gap from the other side of the interrupter structure.
4. Remove the two hex-head bolts that secure the arc-interrupting frame and remove the structure.

To Install the Vacuum Contact-Box Assembly

NOTE: If further maintenance is to be performed, do not reinstall the arc-interrupting structure.

1. Lock in the operating mechanism by closing the yellow operating handle.
2. Install the contact-box assembly and secure with the two hex-head bolts.
3. Reconnect the coil lead and bypass gap to one side of the interrupting structure.
4. Reconnect the long bushing lead to the other side of the structure.
5. Manually open and close the mechanism several times to check the operation of the arc-interrupter assembly.

To Replace Only the Vacuum Interrupter

CAUTION: Equipment damage. Do not twist or apply radial pressure to the vacuum interrupter movable contact rod. Excessive twisting or pressure on the contact rod will damage the interrupter bellows, which can cause equipment failure. T211.0

1. Remove the lead assemblies from each end of the vacuum interrupter by loosening the clamping nuts and prying open the clamps.
2. Remove the cotter pin that attaches the movable-contact rod to the operating linkage.
3. Remove the rear bracket by removing the two attaching screws, lockwashers, and flat washers.
4. Remove the flat spring and withdraw the vacuum interrupter.
5. Install a new interrupter and reassemble the structure in the reverse order of disassembly.

Solenoid Coil

Types H, 4H, and V4H reclosers are constructed so that solenoid coils of different ampere ratings are interchangeable.

To change a coil, proceed as follows:

1. Remove the arc-interrupting structure.
2. Disconnect the short bushing lead and coil-gap assembly from the upper coil lead.
3. Matchmark bridge plate and solenoid frame for proper position during reassembly.
4. Remove the coil shield (Type H only), bridge plate, lower solenoid gasket, and solenoid coil shown in Figure 18.

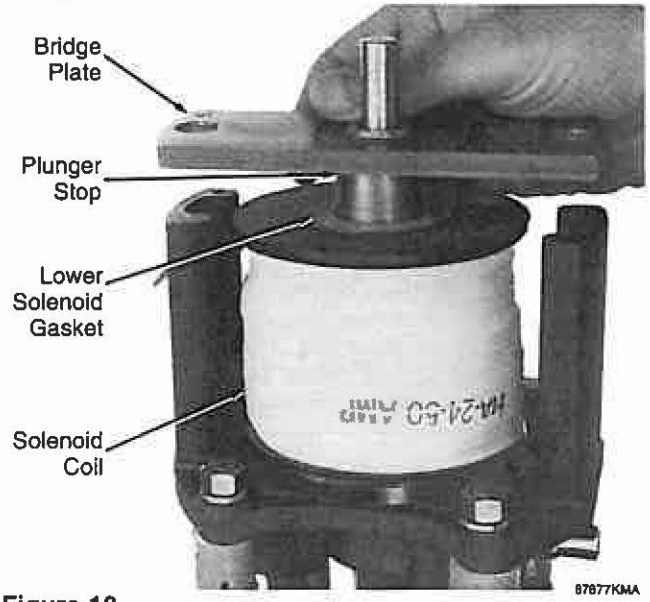

Figure 18.
Removing bridge plate, lower solenoid gasket, and solenoid coil.

NOTE: The bridge plate is drilled and pinned to the solenoid frame in a factory fixture for optimum plunger fit. To obtain the most reliable operation, do not intermix bridge plates, plungers, plunger stops, or any other parts between reclosers.

5. Remove upper solenoid gasket and impact washer shown in Figure 19.

NOTE: Whenever the solenoid coil is replaced or reinstalled, the upper and lower solenoid gaskets must be replaced to maintain proper timing characteristics.

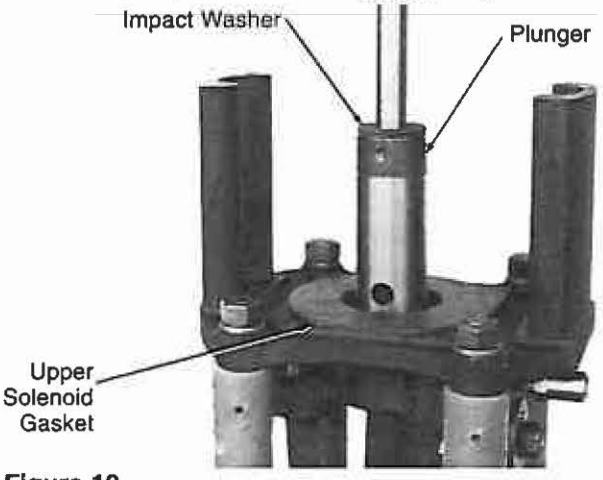

Figure 19. 87B7BKMA
Removing upper solenoid gasket and impact washer.

6. Install solenoid coil of desired rating by reversing the above procedure. Make sure that the coil is installed with its leads on the same side of the recloser as the sleet hood and with the short coil lead connected to the short bushing lead and the long coil lead connected to the contact box.

IMPORTANT: When reinstalling the coil bypass, install with air gap hole facing away from head casting. If it is installed upside down, it will fill with oil and be unable to protect the coil from high-voltage surges.

Solenoid Frame and Hydraulic Mechanism

Normally, the components of the hydraulic timing and counting mechanism will require little or no maintenance. To disassemble the mechanism for cleaning, inspection, and possible replacement, proceed as follows (see Figure 20):

CAUTION: Equipment damage. Carefully support the plunger and pump piston when removing or installing the solenoid frame assembly. If either the plunger or the pump piston are nicked or damaged, the recloser can misoperate or fail to operate. T209.1

1. Remove the four hexnuts and lockwashers which attach the solenoid frame to the support stringers.

IMPORTANT: Raise the assembly slowly to withdraw the plunger and pump piston fron their cylinders. Be careful to keep them from falling and being damaged. See Figure 21.

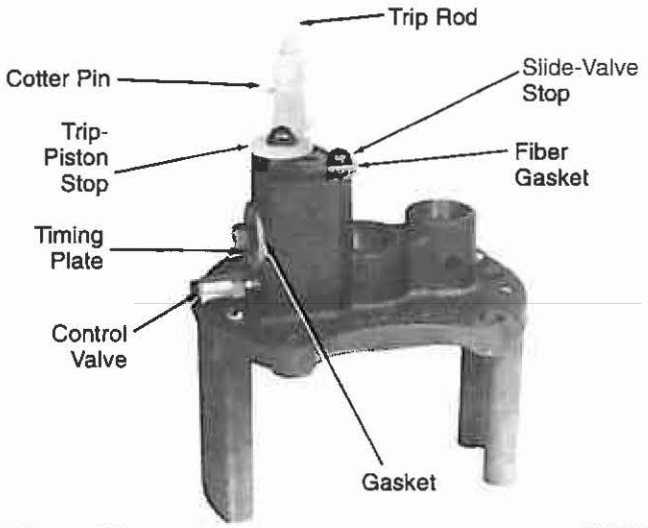

Figure 20. 87B79KMA
Solenoid frame and hydraulic mechanism.

2. Remove the slide valve and spring by removing the two screws and lockwashers attaching the trip-piston stop and the slide-valve stop and gasket to the solenoid frame.

NOTE: Before disassembly, scribe a mark across the slide-valve stop and the adjacent solenoid frame to identify proper orientation during assembly.

3. Remove the timing plate, gasket, and the control-valve assembly from the solenoid frame.

4. If equipped, remove the solenoid plate and gasket by removing the four flat-head screws.

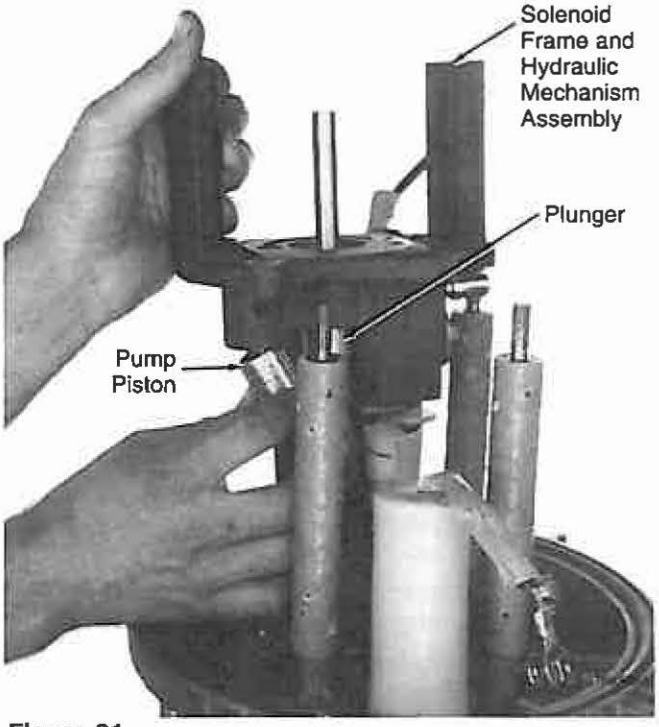

Figure 21.
Removing solenoid frame and hydraulic mechanism.

CAUTION: Equipment damage. Do not over stretch the trip piston return spring when removing the piston assembly. Over stretching the spring can affect the sequence of operation and reset times. T210.0

5. To remove the trip piston assembly:
   - **A.** Using a wire hook, raise the check-valve ball seat out of the underside of the casting to expose the tension spring which is part of the trip-piston assembly.
   - **B.** Insert a thin metal plate through the spring to release the spring tension on the ball-seat pin as shown in Figure 22.
   - **C.** Remove the ball-seat pin to disengage the spring and free the ball seat.

     Note: The steel ball inside the seat is free to drop out. Handle carefully to prevent nicking or scratching.
   - **D.** Withdraw the thin plate from the spring and remove trip-piston assembly. Disassembled hydraulic-mechanism components are shown in Figure 23.
6. Thoroughly clean all parts and carefully inspect for nicks, scratches, or other damage. Include pump piston and plunger in the inspection. Replace as necessary.

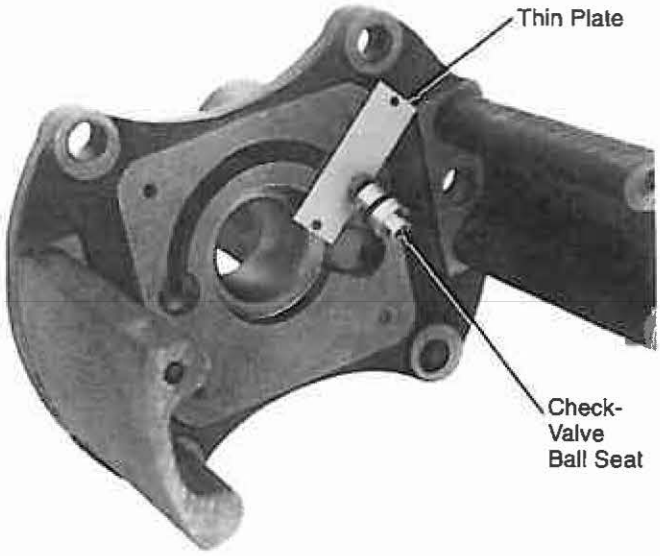

Figure 22.
Releasing spring tension on check valve ball seat pin.
87851KMA

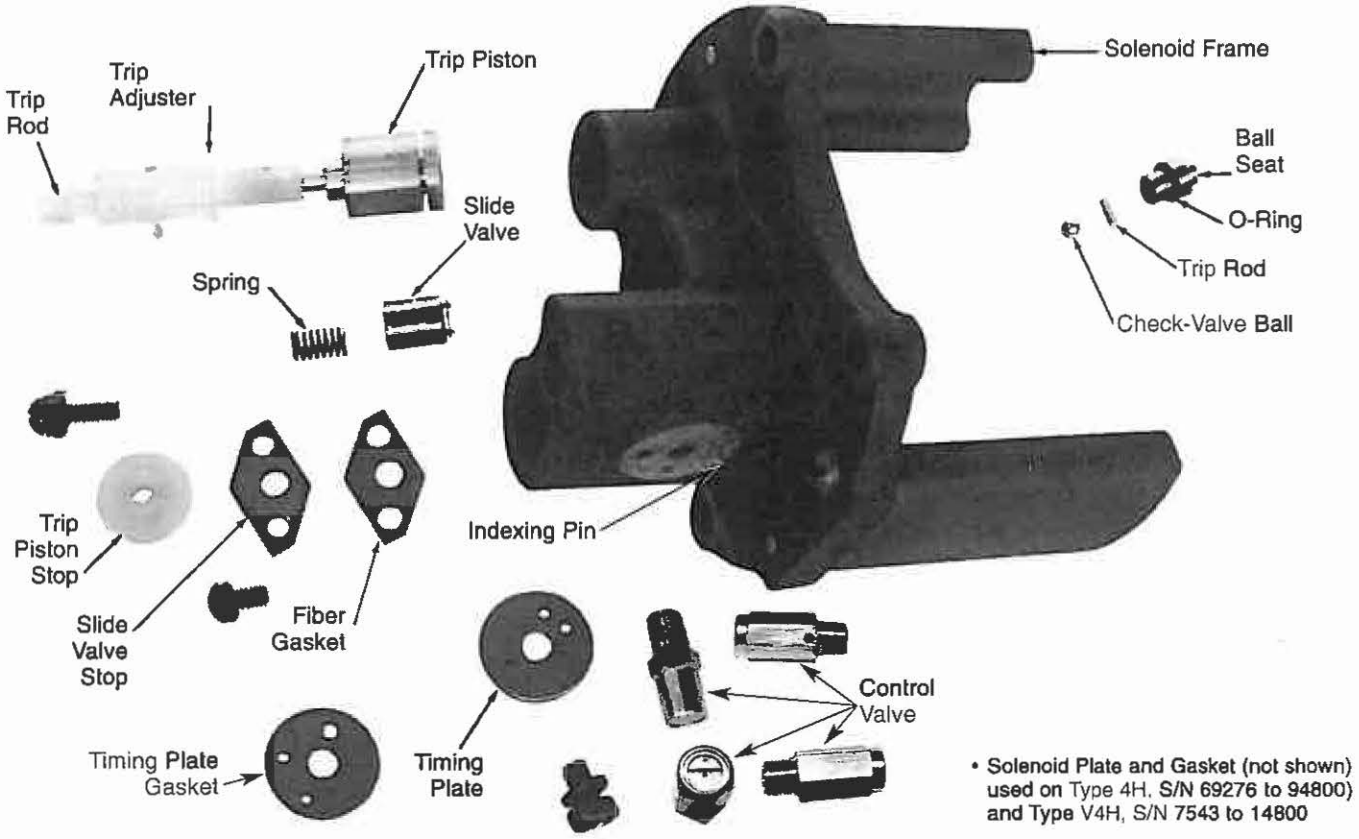

Figure 23.
Disassembled solenoid frame and hydraulic mechanism.
87852KMA

To Reassemble the Hydraulic Mechanism

1. Reinstall the control-valve assembly and the timing plate and gasket. Make sure the small hole in the timing-plate gasket is positioned over the indexing pin and the large hole is positioned over the orifice in the casting. Check that the plate is indexed to the proper timing curve (check data plate on sleet hood for proper timing curves).

CAUTION: Equipment damage. Do not over stretch the trip piston return spring when removing the piston assembly. Over stretching the spring can affect the sequence of operation and reset times. T210.0

2. Replace the trip-piston assembly:
   - **A.** Install the trip piston into its cylinder.

     NOTE: If the operating sequence of the recloser is to be changed, make changes to trip-piston assembly before installing. See **Timing Mechanism** section of this manual.
   - **B.** Using a wire hook, pull out spring through bottom of trip-piston cylinder and hold with a thin metal plate.
   - **C.** Reinstall o-ring gasket on ball seat, replace check-valve ball, and pin the assembly to the spring (see Figure 22).
   - **D.** Remove thin plate and seat check valve in place.
3. If equipped, reassemble solenoid plate and gasket to hold the ball-seat check valve in place. Reverse the solenoid plate gasket when reassembling.
4. Insert slide valve and slide-valve spring into its cylinder and secure the fiber-gasket, slide-valve stop, and trip-piston stop with the appropriate attaching hardware. Check scribe marks made during disassembly to properly orient the slide valve stop. Be sure holes in fiber gasket and slide-valve stop are aligned and centered over the slide-valve cylinder.

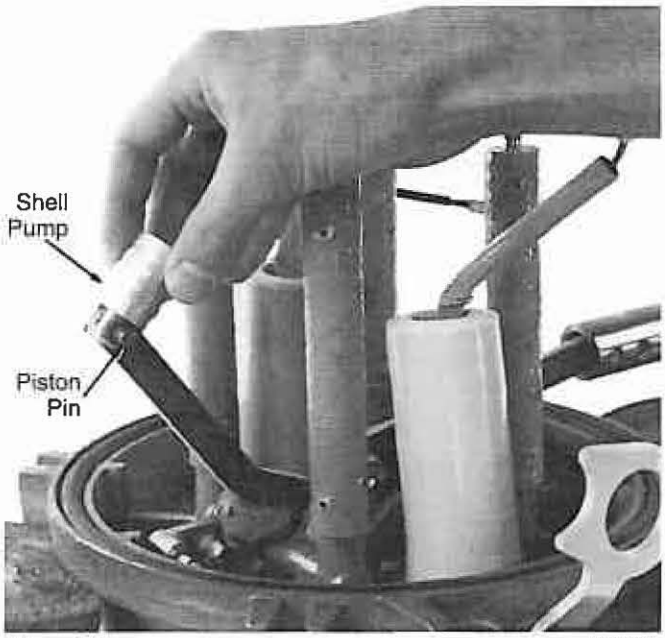

87583KMA

Figure 24.
Removing pump-piston shell to expose steel pin.

5. Test the check valve in the base of the pump piston.
   - **A.** Holding the piston upside down, fill it with clean transformer oil.
   - **B.** If the check valve does not hold, clean it thoroughly and repeat step A.
   - **C.** If the check valve still does not hold, replace the entire pump-piston assembly.
6. To replace the pump-piston assembly (see Figure 24):
   - **A.** Note position of pump-piston shell with respect to the pump-link assembly.
   - **B.** Unscrew shell far enough to expose the piston pin.
   - **C.** Push out pin and discard pump piston.
   - **D.** Install new piston and replace the pump-piston shell in its original position.

Adjusting New Pump Pistons

After installing a new pump piston, it may be necessary to adjust the pump-piston shell to obtain the correct number of operations to lockout. Turning the pump-piston shell to increase the effective length of the piston will cause the port in the pump cylinder to be covered earlier in the downward stroke of the pump. The quantity of oil escaping through this port is reduced, and the amount of oil pumped to the trip-piston cylinder is increased. Turning the shell to decrease the effective length of the piston will cause the port to remain open during a greater part of the stroke. The quantity of oil escaping through the port is increased, and less oil is pumped into the trip-piston cylinder. Proper position of shell is determined as follows:

1. Attach solenoid frame to support stringers. Make sure plunger and pump piston are inserted in their respective cylinders.

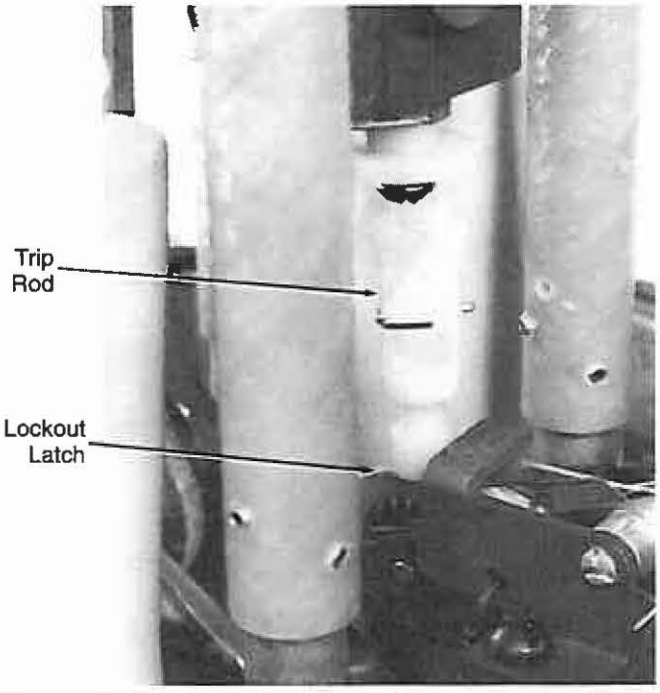

87584KMA

Figure 25.
Trip rod touching lockout latch.

2. Install solenoid-coil assembly; see the **Solenoid Coil** section of this manual.
3. Lower the mechanism into the oil until pump and trip pistons are completely covered.
4. Operate recloser manually. Close and trip mechanism a few times, using the manual operating handle, to remove the air trapped in the hydraulic system. Return operating handle to CLOSED position, and allow trip piston to reset fully.
5. Manually open and close recloser three times if it is set for four operations to lockout. Observe trip rod - end of trip rod should touch lockout latch as shown in Figure 25.
6. To lengthen the travel of the trip rod, increase the effective length of the piston by unscrewing the piston shell a slight amount. The trip-rod travel is shortened by screwing the shell farther onto the piston. Adjust in one-half turn increments and repeat step 5.
7. When adjustment is complete, stake pump-piston shell with a small punch.

Timing Mechanism and Operating Sequence

The operating sequence and timing of Types H, 4H, and V4H reclosers is governed by the hydraulic system. The hydraulic system utilizes the surrounding insulating oil as an operating medium. The operating sequence and timing can be changed with the mechanism disassembled, during maintenance, or by untanking the recloser to gain access to the points of adjustment.

Timing

Provision is made for selecting an A characteristic, no intentional time delay, and a retarded B characteristic or an extra-retarded C characteristic. Choice of the B or C characteristic is made by indexing the timing plate to the appropriate hole (see Figure 26). Complete removal of the timing plate causes all operations of the recloser to have an A curve characteristic.

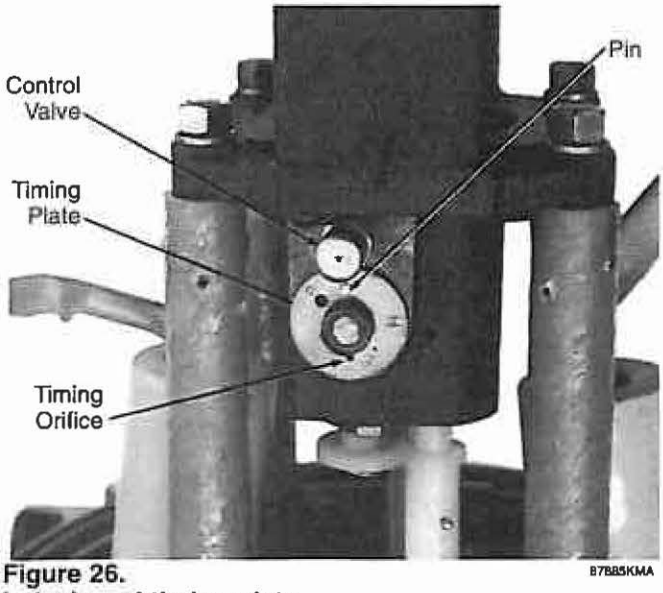

Figure 26.
Indexing of timing plate.

Operating Sequence

Two, three, or four operations to lockout are selected by positioning the trip rod to the appropriate hole in the trip adjuster and securing with a cotter pin. Figure 27 shows a recloser set for two fast and two retarded operations. One operation to lockout is selected by pulling down the non-reclosing lever, located under the sleet hood, which is provided as part of the non-reclosing accessory.

Selection of one, two, or three fast operations is made by positioning the trip adjuster to the appropriate hole in the trip piston and securing with a roll pin (see Figure 27).

NOTE: To gain access to the adjustment for fast operations when the recloser mechanism is assembled, pull out the trip rod until the top of the trip piston is exposed. Use a small, fiber wedge between the trip-piston assembly and the valve-stop plate to hold the trip piston extended while making changes in the number of fast operations. The trip adjuster should be backed by a solid metal object when the roll pin is being driven in or out.

A retarded characteristic for all four operations requires a special spacer above the slide valve and a special slide valve equipped with a timing orifice.

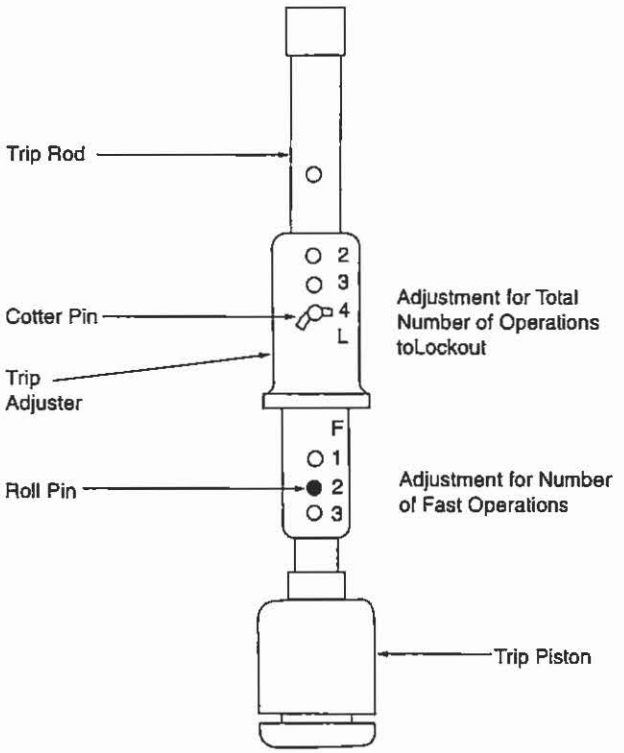

Figure 27.
Adjustments for number of operations to lockout.

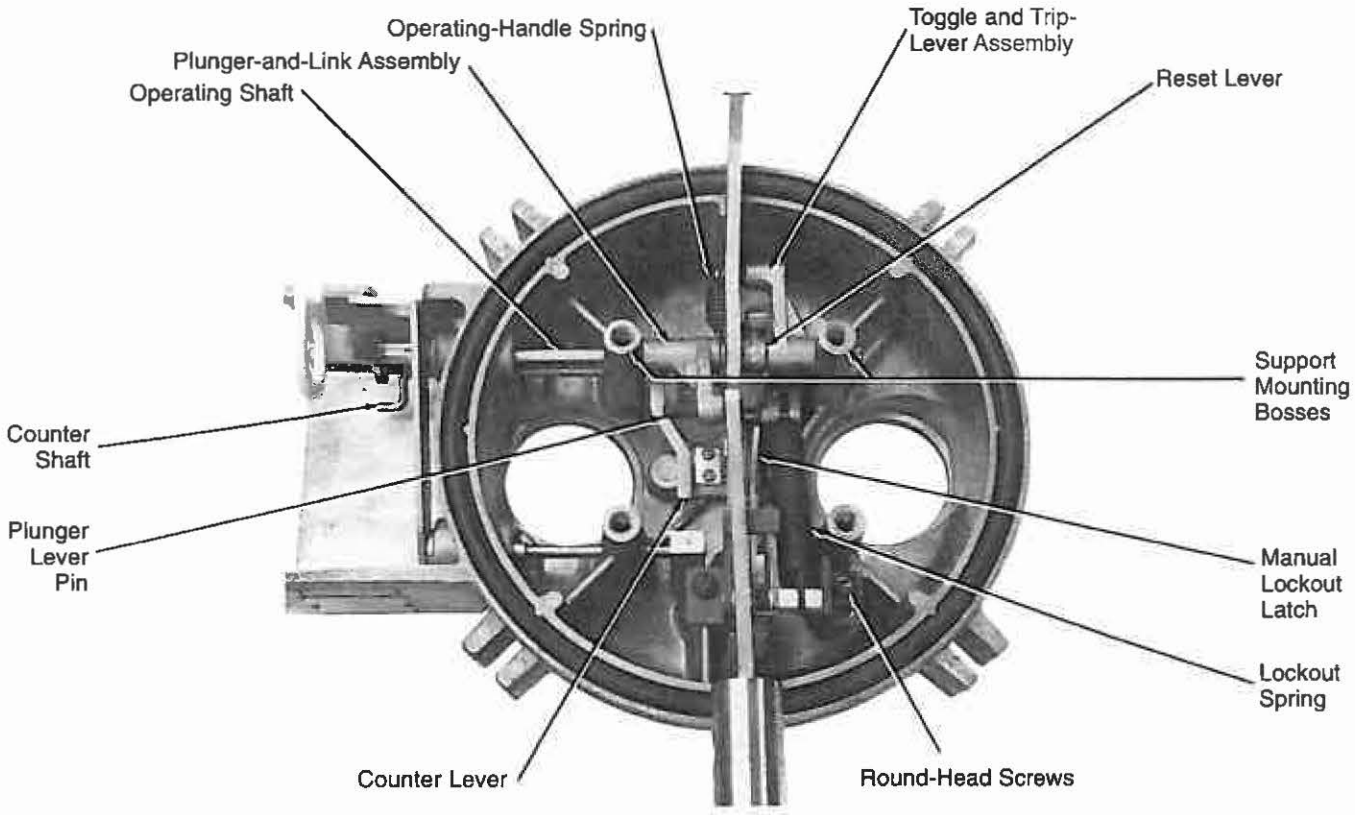

Figure 28.
Head assembly (Type H shown).

Head Assembly

Normally, no maintenance will be required on the head assembly. If the head mechanism is to be disassembled, see Figure 28 and proceed as follows:

1. Make sure yellow operating handle is in OPEN position, then unhook lockout spring.
2. Remove sleet hood cover. Remove counter assembly by unscrewing two round-head mounting screws.
3. Using a drift punch, drive out reset-lever groove pin. Use new groove pin for reassembly.
4. Remove operating-handle spring. Remove two round-head screws to free toggle-trip lever from head casting.
5. Grasp pump piston and plunger in one hand and pull out operating handle and shaft assembly. Lift plunger and link assembly, reset lever, and toggle-trip-lever assembly from head casting.

   Type 4H and V4H (S/N above 94800, 4H; above 14800, V4H) also are equipped with a torsion spring that engages with the toggle-trip-lever assembly. (For upgrade kits for 4H and V4H units with earlier serial numbers, see the **Service Parts Lists, Head Assemblies** section of this manual.)
6. To remove counter shaft and counter lever, drive out counter lever groove pin.
7. To reassemble head mechanism, first replace counter shaft, washer (if equipped), retaining ring, and counter lever.

   Note: Use washer to maintain 1.6 mm (1/16 in.) clearance between retaining ring and head casting.

   Drive new groove pin into counter lever.
8. Slide operating-handle shaft through first support mounting boss.
9. Attach plunger and link assembly, making sure that plunger-lever pin extends over counter lever. Attach reset lever and toggle-trip lever (and torsion spring, if used) to shaft and push shaft through second support mounting boss. Secure toggle-trip lever to head casting with roundhead screws. Be sure reset lever is under toggle-trip-lever pin as shown in Figure 28.
10. Drive in new groove pin from same side of the reset lever from which the groove pin was driven out. Because groove pins are tapered, small end must enter reset lever and pins must be driven in from the large end.

11. Install counter with mounting screws and attach sleet hood cover.

NOTE: Each circuit interruption is recorded by the operation counter. When the counter shaft fails to raise the counter arm enough to register an operation, or if the counter stop is encountered before the unit closes, adjust as follows:

A. With the counter removed, loosen the screw holding the counter arm in place (Figure 29).

B. Move the counter arm slightly upward, if counter stop is encountered too soon, or slightly downward, if counter is failing to index and register a circuit interruption.

C. Retighten the screw and reinstall counter.

D. Check operation of the counter by slowly raising the closing handle. The counter should index (the ratchet should drop into the next groove position) before the recloser contacts close and the recloser contacts should close before the counter stop is encountered. (Hold the operating handle at the point where the recloser contacts just close. The counter arm should be able to travel another 2.4 mm ± 0.8 mm (3/32 in. ±1/32 in.) before the counter stop is hit.)

E. If necessary, repeat the above steps.

IMPORTANT: If the counter stop is hit before the recloser contacts are closed, the recloser may fail to close.

12. Attach operating-handle spring and lockout spring.

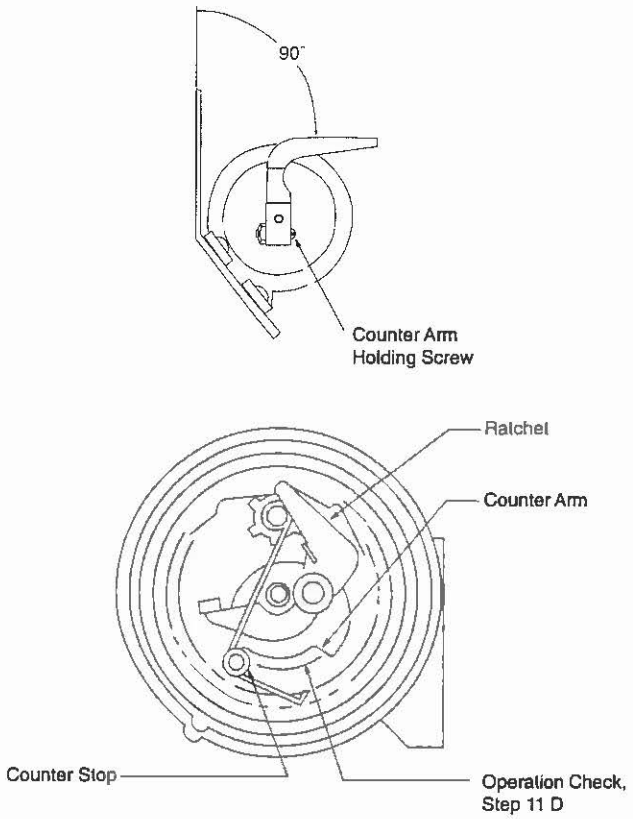

Figure 29.
Operation counter arm.

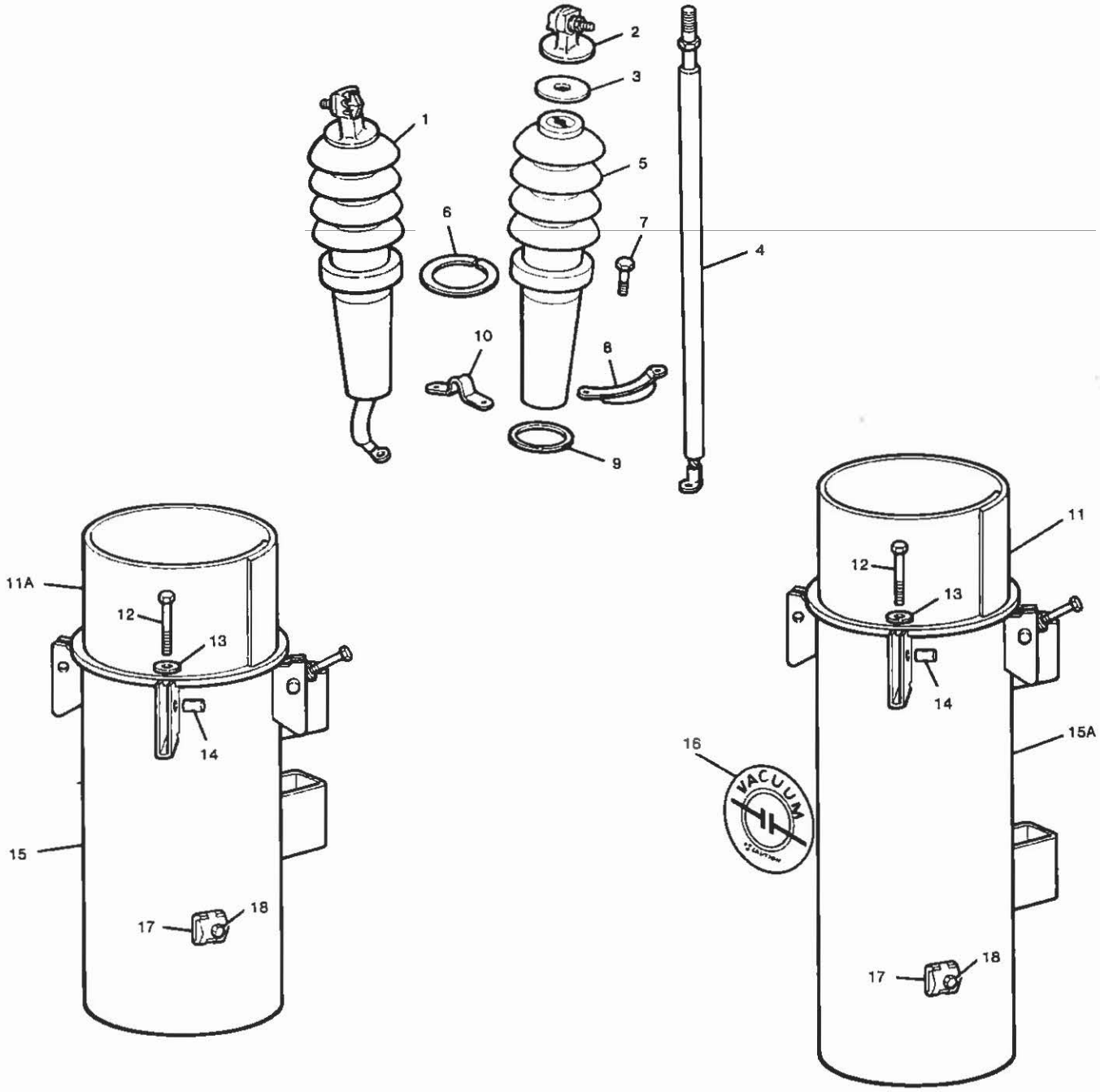

Figure 30.
Bushing and tank assemblies.

Service Parts List
Bushing and Tank Assemblies (Figure 30)

Item No.	Description	Catalog Number	Qty. Per Assy.
1	Bushing Assembly, Type H		
	Standard creepage, short lead	KA234H1	1
	Standard creepage, long lead	KA234H2	1
	17-in. extra-creepage, short lead	KA234H5	1
	17-in. extra-creepage, long lead	KA234H6	1
	Bushing Assembly, Type 4H, (includes items 2 through 5)		
	Standard creepage, short lead	KA234H41	1
	Standard creepage, long lead	KA234H42	1
	17-in. extra-creepage, short lead	KA234H45	1
	17-in. extra-creepage, long lead	KA234H46	1
	Bushing assembly, Type V4H, (Includes items 2 through 5)		
	Standard creepage, short lead	KA234H47	1
	Standard creepage, long lead	KA234H48	1
	17-in. extra-creepage, short lead	KA234H49	1
	17-in. extra-creepage, long lead	KA234H50	1
2	Terminal assembly		
	Type H, standard	KA82H900	2
	Type H (17-in. creepage), 4H and V4H	KA143L900	2
3	Terminal gasket		
	Type H, standard	KP2090A25	2
	Types (17-in. creepage), 4H and V4H	KP2090A57	2
4	Short lead assembly, Type H	KA234H1	1
	Standard creepage bushing	KA233H1	1
	17-in. extra-creepage bushing	KA233H5	1
	Short lead assembly, Type 4H		
	Standard creepage bushing	KA233H41	1
	17-in. extra-creepage bushing	KA233H45	1

Item No.	Description	Catalog Number	Qty. Per Assy.
	Short lead assembly, Type V4H		
	Standard creepage bushing	KA233H46	1
	17-in. extra-creepage bushing	KA233H47	1
	Long lead assembly, Type H	KA234H2	1
	Standard creepage bushing	KA233H2	1
	17-in. extra-creepage bushing	KA233H6	1
	Long lead assembly, Type 4H		
	Standard creepage bushing	KA233H42	1
	17-in. extra-creepage bushing	KA233H64	1
	Long lead assembly, Type V4H		
	Standard creepage bushing	KA233H44	1
	17-in. creepage bushing	KA233H48	1
5	Bushing ceramic		
	Type H		
	Standard creepage	KP328H	2
	17-in. extra-creepage	KP246VR	2
	Types 4H and V4H		
	Standard creepage	KP130VR	2
	17-in. extra-creepage	KP246VR	2
6	Bushing clamping ring	KP121L	2
7	Capscrew, hex hd, sst, 3/8-16x 1-5/8	K730115137162A	6
8	Bushing clamp	KP117H6	6
9	Bushing gasket	KP2090A29	2
10	Lifting strap, sst	KP464H	1
11	Tank liner, Type 4H and V4H	KP178H4	1
11 A	Tank liner, Type H	KP341 H	1
12	Capscrew, hex hd, 3/8-16 x 3, stl	K730101137300Q	4
13	Flat washer	KP2028A34	4
14	Head bolt retainer	KP3061A4	4
15	Tank assembly, Type H	KA172H	1
15A	Tank assembly, Types 4H and V4H	KA10H4	1
16	Decal, Type V4H	KP1041 V4H	1
17	Ground clamp	KA227H 900	1
18	Capscrew, hex, hd, 1/2-13x 1,stl	K730101150100Q	1

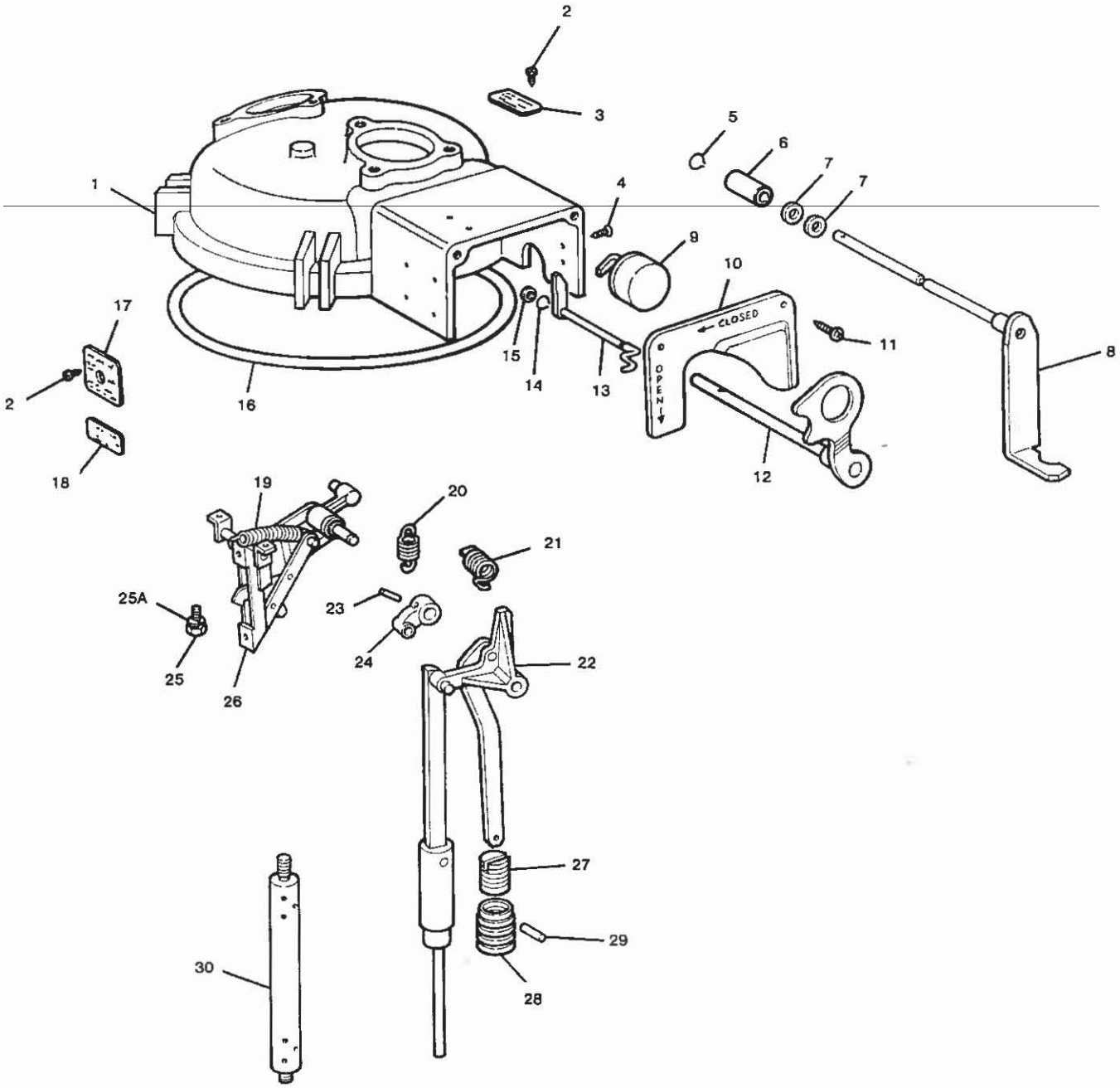

Figure 31.
Head assemblies.

Service Parts List
Head Assemblies (Figure 31)

Item No. Assy.	Description	Catalog Number	Qty. Per
1	Replacement head casting assembly (Includes one shot lever, spacer, washer and retaining ring)	KA700H4S	1
2	Self-tapping screw, rd hd 2 x 3/16, sst	K751515102018A	6
3	Blank operating data plate	KP164H1	1
4	Self-tapping screw, type F, rd hd, 6-32 x 5/8, sst	K751515106062A	2
5	Retaining Ring, WA514, type C	K970901250000M	1
6	Spacer	KP3007A41	1
7	Flat washer, 1/4 an. brass	K900225026050A	2
8	One shot lever and shaft assembly	KA96H	1
9	Counter assembly	KA28C01S	1
10	Cover plate	KP309H	1
11	Self-tapping screw, type T, rd hd, No.12x 1/2,sst	K781515112050A	2
12	Operating handle	KA121 H	1
13	Counter lever and shaft assembly	KA186H	1
14	Retaining ring, type C, 3/16, WA510	K970915188000A	1
15	Flat washer,10S, brass	K900525020043A	2
16	Head gasket	KP2103A7	1
17	Nameplate		
	Type H	KDATA-1	1
	Type 4H	KDATA-1	1
	Type V4H	KDATA-1	1

Item No.	Description	Catalog Number	Qty. Per Assy.
18	Blank coil data plate	KP2122A900	1
19	Toggle tension spring	KP116H6	1
20	Operating handle spring		
	Type H	KP27H	1
	Types 4H and V4H	KP95E	1
21	Torsion spring (Type 4H only above S/N 94800 and Type V4H only above S/N 14800, not used on Type H)	KP239H4	1
22	Plunger and link assembly		
	Type H	KA63H3	1
	Types 4H and V4H	KA9H4	1
	Plunger return spring kit for 4H S/N 62966–94800 and V4H S/N 4491–14800	KA721H4-1	1
	(If plunger and/or plunger stops are worn or damaged, order)	KA721H4-2	1
	Plunger return spring kit for 4H S/N 25479–62965 and V4H S/N 100–4490	KA721H4-2	1
	Plunger return spring kit plus replacement plunger and solenoid frame assembly.	KA721H4-4	1
23	Groove pin, 1/8x5/8	KP2001A12	1
24	Reset lever assembly	KA11H2	1
25	Capscrew, hex hd, 1/4-20x1/2, stl		
	Type H (includes lockwasher)	K831501125050A	2
	Types 4H and V4H	K730101125050Q	2
25A	Split lockwasher, med, 1/4, stl		
	Types 4H and V4H	K900801025000Z	2
26	Toggle and lever assembly	KA205H1	1
27	Pump piston replacement kit	KA725H	1
28	Pump piston shell	KP151H	1
29	Piston pin	KP3055A1	1
30	Insulating support assembly		
	Type H	KA17H1	4
	Types 4H and V4H	KA18H4-1	4

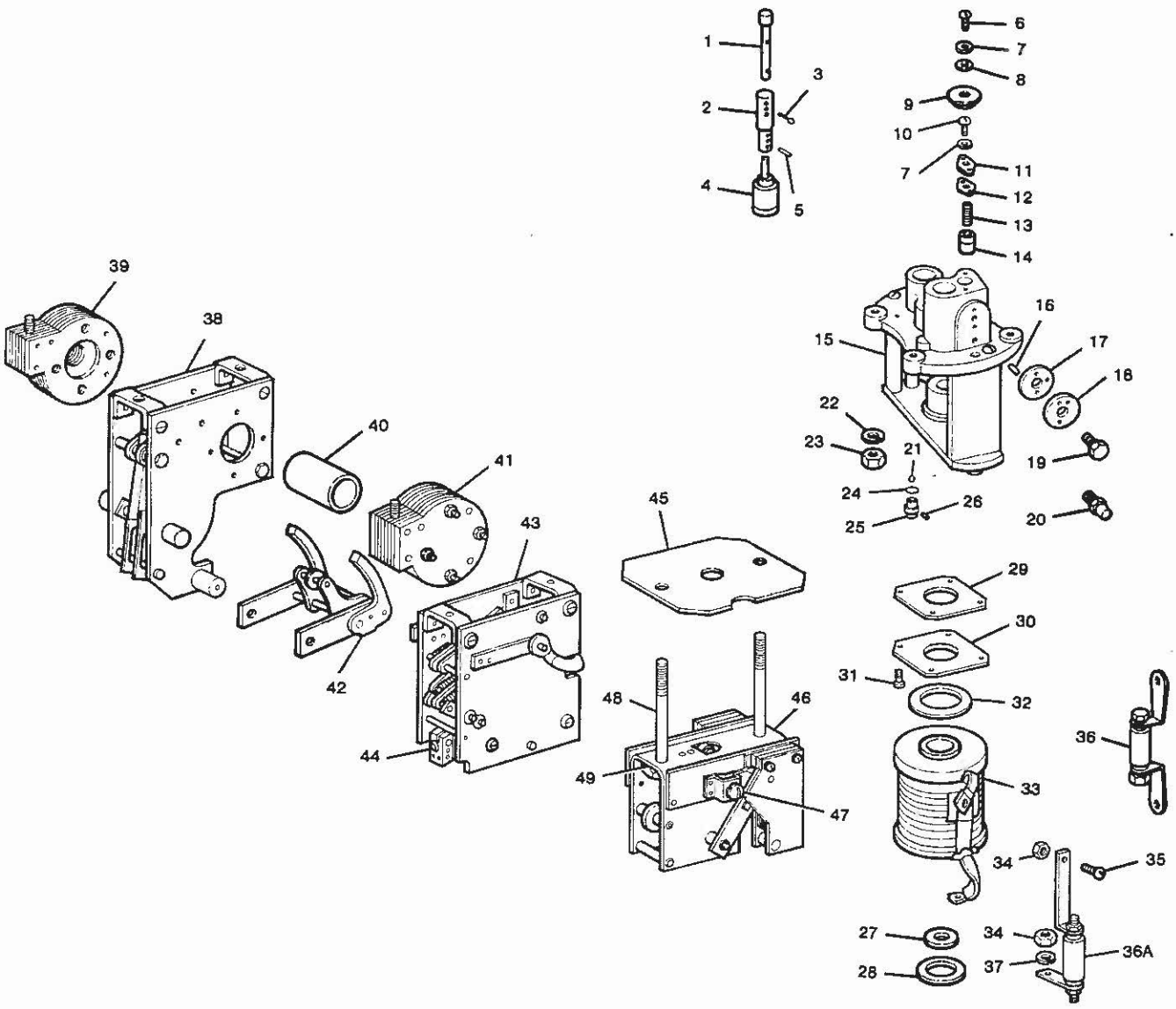

Figure 32.
Solenoid and Interrupter Assemblies.

Service Parts List
Solenoid and Interrupter Assemblies (Figure 32)

Item No.	Description	Catalog Number	Qty. Per Assy.
	Solenoid frame and hydraulic mechanism assembly (includes items 1 through 27)		
	Type H	KA207HS	1
	Trip rod adjuster kit (includes items 1-3 & 9)		
	Type H	KA709H	1
	Type 4H and V4H	KA703H4	1
1	Trip rod		
	Type H	KP216H4-2	1
	Types 4H and V4H	KP216H4-1	1
2	Trip adjuster	KP215H4	1
3	Cotterpin,stl,1/16x 1	K970501062100A	1
4	Trip piston assembly	KA17H4	1
5	Roll pin,1/16 x 7/16, sst	K970815062043A	1
6	Machine screw, rd hd, stl		
	Type H,1 /4-20 x 3/4	K721501125075A	1
	Types 4H and V4H, 1/4-20 x 7/8	K721501125087A	2
7	Split lockwasher, med, 1/4, sstl		
	Type H	K900815025000A	2
	Types 4H and V4H	K900815025000A	1
8	Flat washer, 14S, brass	K900525026056A	1
9	Trip adjuster stop	KP231H4	1
10	Machine screw, rd hd, 1 /4-20 x 1 /2, stl	K721501125050A	1
11	Slide valve stop	KP110H4	1
12	Gasket	KP111H4	1
13	Spring	KP177H4	1
14	Slide valve	KA16H4-2	1
	Types 4H and V4H only		
	B curve trip sequence	KA49H4	1
	C curve trip sequence	KA51 H4	1
15	Solenoid frame assembly (includes bridge plate and hardware)		
	Type H KA206H		1
	Type 4H (above S/N 94801) and Type V4H (above S/N 14801)	KA5H4-1S	1
	Type 4H (below S/N 94751) and Type V4H (below S/N 14761)	KA5H4-2S	1
16	Groove pin,1/8 x 3/8	KP2001A3	1
17	Gasket		
	For KP112H4 timing plate	KP113H4	1
	For KP201H4 timing plate	KP202H4	1
18	Timing plate		
	Type H		
	For all A curve operations	KP201 H4	1
	For B and C curve operations	KP112H4-1	1
	Types 4H and V4H		
	For all A curve operations	KP201H4	1
	For B and C curve operations	KP112H4-2	1
19	Preassembled capscrew and split lockwasher 5/16-18 x 1/2, stl	K830101131050A	1
20	Control valve		
	Type H	KA250H1	1
	Type H (below S/N 169460)	KA722H4-3	1
	Types 4H and V4H		
	For all B and C curve operations	KA722H4-1	1
	For all D curve operations	KA722H4-2	1
	Ball Seat Kit (includes items 21-26	KA710H1	1
21	Ball, 1/4, sst	KP2025A2	1

Item No.	Description	Catalog Number	Qty. Per Assy.
22	Split lockwasher, med, 3/8, stl	K900801037000Z	4
23	Hex nut,3/8-16, stl	K880201116037A	4
24	o-ring gasket	KP2000A3	1
25	Ball seat superseded by	KA710H1	1
26	Pin	KP3051A3	1
27	Impact washer	KP2090A31	1
28	Lower solenoid gasket	KP2090A60	1
29	Gasket, Type 4H (below S/N 94756) and Type V4H (below S/N 14761 only)	KP176H4	1
30	Solenoid plate		
	Type 4H (below S/N 94756) and Type V4H (below S/N 14761 only)	obsolete	1
31	Machine screw, fit hd, 10-24 x 3/4, stl (used to attach KP122H4 solenoid plate	obsolete	4
32	Upper solenoid gasket		
	Type H, Type 4H (above S/N 94800) and Type V4H (above S/N 14800)	KP2090A23	1
	Type 4H (below S/N 94800) and Type V4H (below S/N 14800)	KP2090A55	1
33	Replacement coil kit (state coil rating as suffix to catalog number)		
	Types H,4H and V4H		
	50 A and below	KA83H- _____	1
	Types 4H and V4H		
	100 A and below	KA709H4- _____	1
	Type V4H		
	140 A	KA701V4H1	1
	200 A	KA701V4H2	1
34	Hex nut,5/16-18, brass		
	Types 4H and V4H	K881025118031A	2
35	Preassembled brass screw and bronze split lockwasher, 5/16-18 x 5/8	K831567131062A	1
36	Coil gap assembly,		
	Types H and V4H	KA100H1	1
36A	Coil gap assembly, Type 4H	KA100H2	1
37	Split lockwasher, med, 5/16, bronze Types 4H and V4H	K900830031000A	2
38	Contact box assembly, complete, Type 4H (includes items 39 through 42)	KA4H4	1
39	Exhaust chamber, Type 4H	KA27H4-1S	1
40	Cross blast tube, Type 4H	KP128H4	1
41	Generating chamber, Type 4H	KA26H4-1S	1
42	Movable contact assembly, Type 4H	KA25H4	1
43	Contact box assembly, complete, Type V4H (includes item 44)	KA101V4H	1
44	Vacuum interrupter, Type V4H	KA116V4H2	1
45	Coil Shield, Type H	KP92H1	1
46	Contact box assembly, complete, Type H	KA32H	1
47	Preassembled lockwasher and brass rd hd screw, 5/16-18 x 5/8, Type H	K831567131062A	3
48	Hex hd bolt,		
	1 /2-13 x 4-3/4, Type H	K730101150475A	2
	1 /2-13 x 5, Type 4H	K730101150500A	2
49	Washer		
	Fiber mounting washer, Type H	KP282H	2
	Lockwasher, Type 4H	K900801050000Z	2

COOPER Power Systems

©2003 Cooper Industries, Inc.
Kyle® is a registered trademark of Cooper Industries, Inc.

P.O. Box 1640
Waukesha, WI 53187
www.cooperpower.com

Reclosers

COOPER Power Systems

Types VXE15 and VXE27 Electronically Controlled Single-Phase; Installation and Operation Instructions

Service Information

S280-16-1

VXE15 Serial Number 11009 and above
VXE27 Serial Number 1948 and above

VXE Control Serial Number 7401 and above

020100KM

Figure 1.
Kyle® Type VXE electronically controlled, single-phase, vacuum-interrupting automatic circuit recloser.

Contents

Safety Information 2
Safety Instructions 2
Hazard Statement Definitions 2
Product Information 3
Introduction 3
Acceptance and Initial Inspection 3
Handling and Storage 3
Description 3
Manual Operating Levers and Indicators 5
Recloser Data Plates 6
Control Programming and Operation 7
Type VXE Electronic Control 7
Programming the Control Settings 8
Specifications and Ratings 10
Dimensions 11
Installation Procedure 12
Placing the Recloser In Service 13
Operation 14
Manual Operation of Energized Recloser 14
Non-Reclosing Operation 14
Automatic Operation 14
Lockout Indication 14
Testing 15
Safety Requirements 15
Test Equipment Required 15
Manual Closing Procedure 16
High-Potential Insulation Withstand Tests 16
Minimum-Trip Current Level Test 17
Sequence of Operation Test 17
Electrical Operation of Closing Solenoid Test 18
Accessories 19
Extra Creepage Bushings 19
Bushing-Type Multi-Ratio Current Transformer 19
Low-Voltage Closing 19
Cable-Locking Sleeve 19
SCADA Input/Output Board 19
Maintenance Information 20

SAFETY FOR LIFE

Cooper Power Systems products meet or exceed all applicable industry standards relating to product safety. We actively promote safe practices in the use and maintenance of our products through our service literature, instructional training programs, and the continuous efforts of all Cooper Power Systems employees involved in product design, manufacture, marketing, and service.

We strongly urge that you always follow all locally approved safety procedures and safety instructions when working around high voltage lines and equipment and support our "Safety For Life" mission.

SAFETY INFORMATION

The instructions in this manual are not intended as a substitute for proper training or adequate experience in the safe operation of the equipment described. Only competent technicians, who are familiar with this equipment should install, operate, and service it.

A competent technician has these qualifications:

- *Is thoroughly familiar with these instructions.*
- *Is trained in industry-accepted high- and low-voltage safe operating practices and procedures.*
- *Is trained and authorized to energize, de-energize, clear, and ground power distribution equipment.*
- *Is trained in the care and use of protective equipment such as flash clothing, safety glasses, face shield, hard hat, rubber gloves, hotstick, etc.*

Following is important safety information. For safe installation and operation of this equipment, be sure to read and understand all cautions and warnings.

Hazard Statement Definitions

This manual may contain four types of hazard statements:

DANGER: Indicates an imminently hazardous situation which, if not avoided, will result in death or serious injury.

WARNING: Indicates a potentially hazardous situation which, if not avoided, could result in death or serious injury.

CAUTION: Indicates a potentially hazardous situation which, if not avoided, may result in minor or moderate injury.

CAUTION: Indicates a potentially hazardous situation which, if not avoided, may result in equipment damage only.

Safety Instructions

Following are general caution and warning statements that apply to this equipment. Additional statements, related to specific tasks and procedures, are located throughout the manual.

DANGER: Hazardous voltage. Contact with hazardous voltage will cause death or severe personal injury. Follow all locally approved safety procedures when working around high **and** low voltage lines and equipment. G103.2

WARNING: Before installing, operating, maintaining, or testing this equipment, carefully read and understand the contents of this manual. Improper operation, handling or maintenance can result in death, severe personal injury, and equipment damage. G101.0

WARNING: This equipment is not intended to protect human life. Follow all locally approved procedures and safety practices when installing or operating this equipment. Failure to comply may result in death, severe personal injury and equipment damage. G102.1

WARNING: Power distribution equipment must be properly selected for the intended application. It must be installed and serviced by competent personnel who have been trained and understand proper safety prodedures. These instructions are written for such personnel and are not a substitute for adequate training and experience in safety procedures. Failure to properly select, install or maintain power distribution equipment can result in death, severe personal injury, and equipment damage. G122.2

PRODUCT INFORMATION

Introduction

Service Information S280-16-1 provides installation instructions, operation information, and testing procedures for Kyle® single-phase, electronically controlled VXE15 and VXE27 reclosers.

The information contained in this manual is organized into the following major categories: *Safety Information, Product Information, Control Programming and Operation, Specifications and Ratings, Dimensions and Weights, Installation Procedure, Recloser Operation, Testing, Accessories, and Maintenance Information.*

Serial Number Updates

VXE15: Serial Number 11009 and above
Include updated oil dipstick.

VXE27: Serial Number 1948 and above
Include updated oil dipstick.

VXE Control: Serial Number 7401 and above
Include ball target lockout indicator and larger cabinet.

Read This Manual First

Read and understand the contents of this manual and follow all locally approved procedures and safety practices before installing or operating this equipment.

Additional Information

These instructions cannot cover all details or variations in the equipment, procedures, or processes described nor provide directions for meeting every possible contingency during installation, operation, or maintenance. For additional information, please contact your Cooper Power Systems sales representative.

Acceptance and Initial Inspection

Each recloser is completely assembled, tested, and inspected at the factory. It is carefully calibrated, adjusted, and filled to the correct level with insulating oil. Always verify the proper oil level by using the dipstick (refer to Figure 8).

It is in good condition when accepted by the carrier for shipment. Upon receipt, inspect the recloser and the control thoroughly for damage and loss of parts or oil incurred during shipment. If damage or loss is discovered, file a claim with the carrier immediately.

Check for oil leakage and tighten all bolts that may have loosened during shipment, especially the tank mounting bolts. Tank mounting bolts should be tightened to 34–54 N•m (25–40 ft•lb) torque, using an alternating tightening pattern.

Handling and Storage

Recloser and Control

If the unit is to be stored for any appreciable time before installation, provide a clean, dry storage area. Be careful during handling and storage to minimize the possibility of damage; in particular, protect the bushings, control, and control cable.

Control and Lockout Indicator Batteries

During storage, the control and lockout indicator batteries must be disconnected from the control and lockout indicator circuit boards. If the storage area temperature exceeds 100° F, remove the control batteries and store in a cool, dry area.

Standards

The Kyle® Type VXE recloser is designed and tested in accordance with:

ANSI/IEEE C37.60 - 1981

ANSI C37.61 - 1973

ANSI C37.85 - 1989

Quality Standards

The Quality System at the Cooper Power Systems, Kyle Distribution Switchgear plant is certified to the following standards:

ISO 9001

CAN/CSA ISO 9001

BS EN ISO 9001

ANSI/ASQC Q9001

Description

The Type VXE recloser is a self-contained, single-phase, current-interrupting device. VXE reclosers protect distribution systems with phase-to-phase voltage ratings of 15.5 through 27.0 kV and are rated at 400 A maximum continuous current and 8000 A symmetrical interrupting current.

A complete Type VXE recloser assembly consists of a VXE recloser and a separate VXE control, which is connected to the recloser with a control cable. The control cable is available in lengths from 2–30 m (7–100 ft) and is specified at time of order. The control cabinet is designed to be mounted to the recloser tank, or it can be mounted to the pole or other mounting structure, such as crossarms, at a distance equal to the cable length. The control cable is attached to the control and recloser with threaded, separable weatherproof connectors.

Recloser Operation

The VXE recloser senses line current and automatically interrupts the phase of the distribution circuit to which it is connected when line current exceeds the minimum-trip level. Next, it automatically recloses to restore service and monitor the line to determine if the fault has been cleared. If the fault is permanent, the recloser locks out after one, two, three, or four preset trip operations. Once locked out, the recloser must be manually reset to restore service.

Note: The recloser can be reset remotely if equipped with the SCADA Input/Output accessory board, via the remote close feature.

Should the fault clear before lockout, the recloser will reset automatically for another sequence of operations. The recloser can also be set for non-reclosing operation (lockout after the first trip operation) with a manually operated external non-reclosing lever. The recloser can be remotely set for non-reclosing operation, if equipped with the SCADA Input/Output accessory board, via the remote non-reclosing feature. The trip operations of the recloser can be all fast, all delayed, or any combination of fast operations and delayed operations up to a maximum total of four. Fast operations clear temporary faults before branch line fuses are weakened. Delayed operations allow time for fuses or other downline protective devices to clear to limit permanent faults to the smallest section of line.

The VXE recloser control uses solid-state electronics to provide accuracy, reliability, and flexibility for overcurrent sensing and trip timing. The electronic circuits are housed in a separate weatherproof cabinet attached to the recloser tank and connected to the recloser with a control cable.

Vacuum Interrupter

Arc interruption takes place within the sealed vacuum interrupter. Oil is used for electrical insulation but is not involved in arc interruption of load or fault current.

Tripping and Closing

The moving contact in the vacuum interrupter is driven open by the release of an opening spring. A low-energy actuator, operated by the electronic circuitry, releases the opening spring when line current is sensed above the preset minimum-trip level. Closing energy, as well as energy to charge the opening spring, is supplied by a high- or low-voltage closing solenoid momentarily connected phase-to-ground through a high-voltage contactor.

Closing Solenoid

Selection of the closing solenoid voltage rating is based on the phase-to-ground voltage of the system on which the recloser is to be used. Low-voltage ac and dc closing coils are also available for the closing solenoid (refer to Table 6). Electrical power for low-voltage closing is supplied through a 2-pin connector mounted on the recloser head.

Closing Solenoid Operation

The closing operation is illustrated by considering the recloser to be connected to the line, but locked out (orange control lockout indicator target is displayed). To close from lockout, the manual operating handle must be pulled downward to the Open position and then raised to the Closed position. This allows the closing solenoid contactor to close the phase-to-ground connection, thereby energizing the closing solenoid and imparting an upward acceleration to the solenoid plunger.

Upward movement of the plunger causes the recloser operating mechanism to effect the following actions:

1. Opening spring is charged.
2. Closing solenoid contactor opens.
3. Closing spring is released, driving contact operating rod downward to close the vacuum interrupter.
4. Undervoltage lockout timer is reset.

Undervoltage Lockout

An undervoltage lockout feature is provided to protect the high-voltage closing solenoid from thermal damage, which could be caused by repeated closing attempts during severe undervoltage conditions.

The undervoltage lockout system protects the closing solenoid with a spring-biased hydraulic time-delay lockout linkage charged with the closing stroke of the closing solenoid or by operating the yellow handle.

Each closing signal initiates a time-delayed lockout operation with the down stroke of the solenoid plunger. The time-delay is 20 seconds. If sufficient voltage is present and the oil is filled to the proper level, a closing operation occurs and the undervoltage lockout linkage is reset. If system voltage is too low to permit a closing operation or if the oil level is low, the linkage will provide lockout following its time delay.

The undervoltage lockout feature also prevents unexpected recloser closing upon the return of line voltage, in the event that a reclose operation is attempted without sufficient line voltage.

If a closing operation is attempted by closing the manual operating handle with a hotstick (or via remote close on units equipped with the SCADA I/O board) and line voltage is below 85% of rated voltage, the recloser will lock out and the manual operating handle will drop to the Open position. The recloser can only be closed when line voltage is within ± 15% of the rated voltage of the closing solenoid.

Low-Energy Opening and Closing Actuators

Low-energy actuators, which receive signals from the electronic control, are utilized for both opening and closing functions. Each actuator consists of a permanent magnet, a spring-biased armature, and a coil assembly. Pre-charged reset springs are used to charge the armature of each actuator upon completion of mechanism operation.

Manual Operating Levers and Indicators

The operating levers and indicators (Figure 2) for the Type VXE recloser are located under the sleet hood.

Figure 2.
Recloser operating levers and indicators.

Manual Operating Handle

WARNING: Hazardous voltage. Do not rely on the open position of the yellow operating handle or the contact position indicator; it does not ensure that the line has been de-energized. Always establish a visible disconnect. Failure to follow proper safety practices can result in contact with high voltage, which will cause death or severe personal injury. G114.1

The yellow manual operating handle permits manual opening and closing of an energized recloser. Pulling down the handle trips and locks open the main contacts of the recloser. It is never to be used as a substitute for establishing a visible disconnect during line work.

WARNING: Hazardous voltage. Always use a hotstick when working with this equipment. Failure to do so could result in contact with high voltage, which will cause death or severe personal injury. G108.1

Lifting up the handle closes the closing-coil contactor, and, if high-voltage power is supplied to the recloser source-side bushing, the closing solenoid will close the main contacts. The manual operating handle is designed to be operated with a hotstick.

IMPORTANT: When closing, always place the hotstick underneath the handle. Do not use the eye in the yellow handle for a closing operation: the hotstick will encounter the sleet hood before the closing procedure can be completed.

The handle is trip free, meaning that it will not prevent the recloser from tripping on a fault while the handle is being held closed. If the yellow operating handle is held in the closed position, the recloser will only operate its programmed number of operations and the control will lock out.

When the recloser operates to lockout, the yellow operating handle will not drop down from under the sleet hood. The yellow handle only drops during a manual opening or with the undervoltage lockout feature operation. Control lockout is indicated by an orange lockout indicator target located on the bottom of the control cabinet.

When source voltage is present, the recloser can be closed from lockout by pulling down the operating handle to the Open position and raising it to the Closed position. If the recloser is equipped with the SCADA accessory, the recloser can be remotely closed from lockout, without using the manual operating handle, as long as the manual operating handle is in the Up position.

Non-Reclosing Lever

WARNING: Hazardous voltage. Always use a hotstick when working with this equipment. Failure to do so could result in contact with high voltage, which will cause death or severe personal injury. G108.1

The non-reclosing lever provides the recloser with the capability of locking out on the first trip operation, regardless of the operations-to-lockout setting inside the control. The non-reclosing lever is designed for operation with a hotstick.

WARNING: Hazardous voltage. Do not rely on the open position of the yellow operating handle or the contact position indicator; it does not ensure that the line has been de-energized. Always establish a visible disconnect. Failure to follow proper safety practices can result in contact with high voltage, which will cause death or severe personal injury. G114.1

For non-reclosing operation, the lever is pulled from under the sleet hood to its down position, as shown in Figure 2. The lever must be manually returned to the up position in order to return the recloser to its pre-programmed number of operations to lockout. The recloser can be opened or closed manually regardless of the position of the non-reclosing lever.

Contact Position Indicator

Located on the outboard side of the sleet hood, this indicator displays the word OPEN (Green) when the recloser contacts are open and CLOSED (Red) when the recloser contacts are closed.

Operations Counter

A four-digit mechanical counter, located under the sleet hood, cumulatively records each time the recloser trips open.

Electronic Control

The electronic circuits for programming the operating sequence, minimum-trip levels, time–current characteristics, and other parameters are located in a separate padlockable cabinet that can be mounted at any convenient accessible location, near or remote from the recloser.

CAUTION: Fire. Explosion. Leakage. Severe burn hazard. Do not recharge or disassemble battery. Battery should not be exposed to temperatures above 175°F. Do not incinerate or expose the battery contents to water. Failure to comply can result in equipment damage and serious personal injury. T251.1

No external power source is required to operate the electronics. Power is obtained from the line by means of a 1000:1 bushing current transformer mounted in the head of the recloser. A minimum of 3 A of primary current flow is sufficient to power the sensing circuits and charge the trip capacitors which actuate the low-energy actuator. A 9 V, 1.4 Ah lithium battery is provided to supply energy to actuate the closing contactor. And, in the event that current drops below 3 A, the battery will ensure proper control operation.

Electronic control circuitry is centralized on a single printed circuit board which is easily replaceable. DIP switch programmable control parameters, along with easily replaceable TCC cards, increase application flexibility. Refer to the *Control Programming and Operation* section of this manual for further information.

The VXE control can be equipped with an optional SCADA input/output board to provide remote operation and status functions for SCADA applications. Refer to the *Accessories* section of this manual for additional information.

Recloser Data Plates

Check the recloser data plates (Figure 3), which are located on the sleet hood, to make sure the closing coil voltage, the voltage, and the current ratings are compatible with the system on which the recloser is to be installed.

WARNING: Hazardous voltage. Closing coil voltage and current ratings must be compatible with the system application. Refer to the data plates, located on the sleethood of the recloser, for specific rating information. Failure to comply can result in death, severe personal injury, and equipment damage. G129.0

921122KM

Figure 3.
Recloser data plates are located on sleet hood.

CONTROL PROGRAMMING AND OPERATION

Type VXE Electronic Control

The VXE electronic control utilizes solid-state circuitry and provides the intelligence for current sensing, trip timing, and all other control functions. The control has an external weatherproof cabinet connected to the recloser with a control cable.

No external power source is required to operate the VXE control. Power is obtained from the line by means of a bushing current transformer. The separate control cabinet is intended to be mounted to the recloser tank, although it can be mounted to the pole or other mounting structure at a distance approximately equal to the cable length. The maximum control cable length is 30 m (100 ft).

Current Sensing

VXE reclosers have a 1000:1-ratio-sensing current transformer, mounted on the load-side bushing under the head, which provides phase current sensing. The CT is connected to the electronic control cabinet through the control cable. A solid-state CT protector is connected to the current transformer inside the recloser, ahead of the cable disconnect, to allow for removing the control while the recloser is in service.

Control Power

Control power for the electronic circuitry is supplied by the sensing CT located in the recloser when a minimum of 3 A of line current is flowing through the recloser. A green LED on the circuit board will light when the control is powered by line current (20-second delay for LED to light).

A minimum of 3 A of primary current is sufficient to power the electronics and charge the trip capacitors, which actuate the low-energy opening actuator. In addition, a control battery is required to supply power to the control during the reclose intevals. If line current drops below 3 A or the recloser is in the open position, power is then supplied by the control battery.

Control Batteries

CAUTION: Fire. Explosion. Leakage. Severe burn hazard. Do not recharge or disassemble battery. Battery should not be exposed to temperatures above 175°F. Do not incinerate or expose the battery contents to water. Failure to comply can result in equipment damage and serious personal injury. T251.0

The VXE control requires a 9 V, 1.4 Ah lithium battery to supply power when line current is not present. The battery is required to close the recloser after a trip operation, during a normal trip sequence, and to eliminate arming time. Arm time is the time self-powered controls require to charge the power supply, before the control can issue a trip signal. This is noted for instances of a dead battery. In spite of a dead battery, the fault current will arm the control and trip the recloser open.

The VXE control requires a second 9 V, 1.4 Ah lithium battery to operate the lockout indicator. The battery is required to supply the current needed by the trip and close coil of the lockout indicator.

IMPORTANT: The control and lockout indicator batteries should be disconnected from the control and lockout indicator circuit boards whenever the control is not in service.

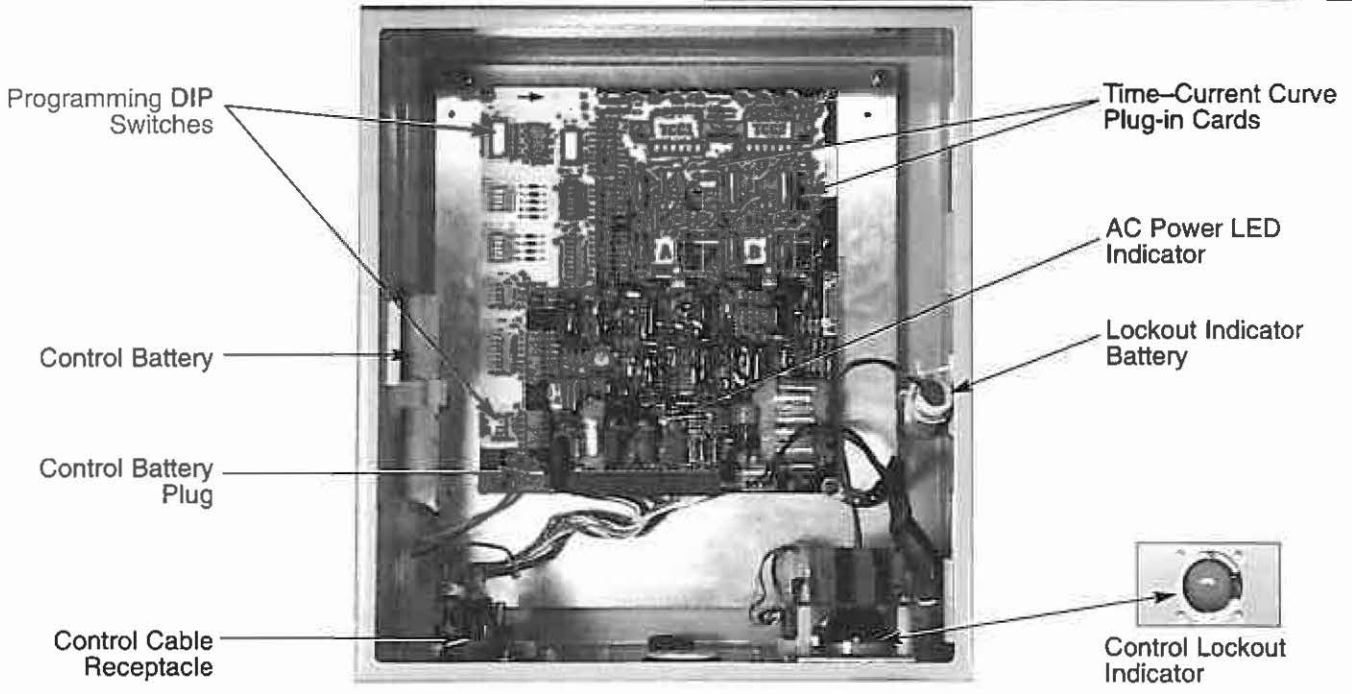

020096KM
020066KM

Figure 4.
Type VXE electronic recloser control.

Battery Replacement

Although both the control and lockout target batteries are designed to last for ten years under normal duty, it is recommended that they be replaced every six years. This corresponds to the maximum recommended interval for vacuum recloser maintenance. The control battery should also be replaced if the total accumulated time without CT power reaches 100 days; however, the control battery life is reduced to half (50 days) with SCADA. The control battery life is independent of the number of trip or close operations of the recloser.

CAUTION: Equipment misoperation. Do not energize this equipment until all control settings have been properly programmed and verified. Refer to the Control Programming and Operation section of this manual for programming procedures. Failure to comply can result in misoperation (unintended operation), equipment damage, and personal injury. G118.1

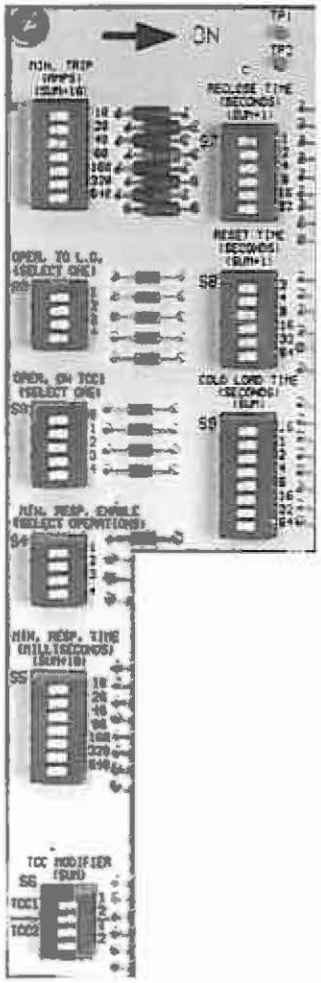

921119KM-2

Figure 5.
Programming DIP switches.

Programming the Control Settings

The control must be programmed with all necessary operating settings prior to operation with an energized recloser. Changes in the control operating parameters should only be made by a qualified technician or engineer.

The DIP switches for programing the control are located on the lefthand side of the control cabinet as shown in Figure 4.

Sequence Coordination

Sequence Coordination prevents unnecessary operation of the backup recloser for a fault beyond a downline recloser by advancing the control sequence one step when line current exceeds the programmed minimum trip value for a time duration shorter than the programmed control response time. This maintains trip coordination with a downline recloser while protecting fuses from temporary faults.

Sequence Coordination is always active for the number of TCC1 operations selected for the VXE control. For example, for two trip operations on TCC1 and two trip operations on TCC2, Sequence Coordination will advance to TCC2 for the third trip operation of the downline recloser, maintaining trip coordination.

Minimum-Trip Value

The minimum-trip current rating for phase overcurrent is established by positioning DIP switches (labeled S1) in the control (Figure 5). The minimum-trip setting of the recloser can be changed by merely changing the DIP switch setting.

Minimum-trip level can be programmed from 10 through 1280 A, in 10 A increments. The programmed value equals the sum of the values of the switches in the On position plus 10 A.

To avoid inadvertent tripping of the recloser when changing minimum-trip settings on an energized recloser, *all the S1 switches must be set to the ON position first.* Turn off the necessary switches to obtain the desired minimum trip value.

Operations to Lockout

The control can be set to provide 1, 2, 3, or 4 operations to lockout, by positioning one of the DIP switches labeled S2 to the ON position (Figure 5). If more than one switch is selected, only the lowest switch value will be enabled. If none are selected, the control defaults to 4 operations.

Operations on TCC Number 1

The control can be set to provide 0, 1, 2, 3, or 4 operations on TCC 1, by positioning one of the DIP switches labeled S3 to the ON position (Figure 5). If none are selected, the control defaults to zero operations. If more than one switch is selected, all operations will be on TCC 1.

Minimum Response Time Enable

To achieve coordination of in-line fault-interrupting devices, where fault levels would cause simultaneous tripping, the minimum response time function will inhibit tripping until a programmed time has elapsed. The minimum response time function can be enabled on operation 1, 2, 3, and/or 4, by selecting any of the desired DIP switches labeled S4 (Figure 5).

Minimum Response Time Setting

The minimum response time setting is established by positioning the DIP switches labeled S5 (see Figure 5). Minimum response time can be programmed from 10 through 1280 milliseconds, in 10 millisecond increments. The programmed time setting equals the sum of the values of the switches in the On position plus 10 milliseconds.

Time–Current Curve Characteristics

The VXE time–current characteristic (TCC) curves are established by individual circuit cards that plug into the circuit board of the control (Figure 4). Two TCC plug-in cards are required for proper operation.

The available plug-in time current characteristic curves, and the TCC modifiers available for the electronic control, enable the VXE to meet a wide variety of application requirements and simplify coordination with other protective devices in the distribution system.

All timing starts at initiation of a fault or when closing into a fault. TCC circuit cards are interchangeable between sockets TCC1 and TCC2. However, fast curves are normally used in TCC1, and delayed response curves are normally used in TCC2.

Time–Current Curve Modifiers

The DIP switches labeled S6 (Figure 5) are used to modify the shape of the time–current curve produced by the TCC plug-in card for TCC1 and/or TCC2. Each TCC plug-in card can produce 4 curves (Unmodified, Mod 1, Mod 2, or Mod 3).

The TCC modifier is the sum of the values of the DIP switches. For example, TCC1 is unmodified when both DIP switches are in the Off position. To modify TCC1 to obtain the Mod 3 modification, move TCC1 DIP switches 1 and 2 to the On position.

Reclose Time

The reclose time setting is established by positioning the DIP switches labeled S7 (Figure 5). Reclose time, the open interval between fault timings, can be programmed from 1 through 64 seconds, in 1-second increments. Programmed reclose time is the sum of the value of all DIP switches in the On position plus 1 second.

Reset Time

The reset-after-successful-reclose time setting is established by positioning the DIP switches labeled S8 (Figure 5). Reset time can be programmed from 1 through 124 seconds, in 1-second increments. Programmed reset time is the sum of the value of all DIP switches in the On position plus 1 second.

Cold-Load Pickup

After the recloser has been closed from lockout, either manually or remotely, cold-load pickup will be active for the programmed time interval. During this interval, the control will be in the one-operation-to-lockout mode, and overcurrent timing will be on time–current curve number 2. If no overcurrent is present during the programmed time interval, the control will reset and the lockout indicator will flip from orange to black.

The cold-load pickup time setting is established by positioning the DIP switches labeled S9 (Figure 5). The cold-load pickup time can be programmed from 0 to 127.5 seconds in 0.5-second increments. Programmed cold-load pickup time is the sum of the value of all DIP switches in the On position.

Control Lockout Indicator

Control lockout is indicated by a lockout indicator located at the bottom of the control cabinet. A round orange target (shown in Figure 4) is displayed when the control is in lockout. When the control is not in lockout, the display is black.

The control lockout indicator will not change status if cold-load pickup is active until the cold-load pickup time interval elapses.

SPECIFICATIONS AND RATINGS

Check Recloser Ratings Prior To Installation

The recloser will operate effectively only when applied within its specified ratings. Consult the following ratings tables and compare to system characteristics at the point of application prior to installation.

TABLE 1
Voltage Ratings

VXE15	
Maximum Design Voltage (kV)	15.5
Nominal Operating Voltage (kV)	2.4-14.4
Basic Insulation Level (BIL) (kV)	110
60 Hertz Withstand Voltage (kV)	
Dry, one minute	50
Wet, ten seconds	45
Max RIV at 1.0 MHz/9.41 kV (µV)	100
VXE27	
Maximum Design Voltage (kV)	27.0
Nominal Operating Voltage (kV)	24.9
Basic Insulation Level (BIL) (kV)	150
60 Hertz Withstand Voltage (kV)	
Dry, one minute	60
Wet, ten seconds	50
Max RIV at 1.0 MHz/23 kV (µV)	100

TABLE 2
Current Ratings

Continuous Current Rating (A)	
VXE15, VXE27	400
Symmetric Interrupting Current (A)	
VXE15, VXE27	8,000
Overload Capability VXE15, VXE27	
125% - 4 Hours (A)	500
150% - 2 Hours (A)	600
Cable Charging Current	
VXE15 (A)	5
VXE27 (A)	25
Magnetizing Current (A)	
VXE15, VXE27	14
Three-Second Current, Symmetric (A)	
VXE15, VXE27	8,000
Surge Current (A) VXE15, VXE27	65,000

TABLE 3
Duty Cycle

Percent of Maximum Circuit Interrupting Rating	Maximum X/R Ratio	Number of Unit Operations
15-20	4	88
45-55	8	112
90-100	15	32
		Total 232

TABLE 4
Mechanical Specifications

Operating Temperature (°C)	
Minimum	-30
Maximum	+40
Closing Mechanism	Spring/Solenoid Operated
Opening Mechanism	Spring Operated
Contact Gap (approximate) (inches)	0.4 - 0.5
Contact Close Time	
Close Signal To Contact Make (seconds)	0.19 - 0.24
Open Contact Travel Time	
Open Signal To Contact Part (seconds)	0.014 - 0.022
Interrupting Time	
Open Signal to Arc Extinction (seconds)	0.016 - 0.036
Allowable Contact Erosion (inches)	0.0625
Mechanical Life (minimum operations)	2500

TABLE 5
Weights and Oil Capacity of VXE15 and VXE27 Reclosers

Weight, without oil, kg (lb)	67 (149)
Weight, with oil, kg (lb)	89 (198)
Oil Capacity, L (gal).	36 (9.5)
Weight of the Control, kg (lb)	7.2 (16)

DIMENSIONS

Recloser Dimensions

Figure 6 shows the dimensional information for VXE reclosers. Figure 7 provides the mounting dimensions for the control cabinet.

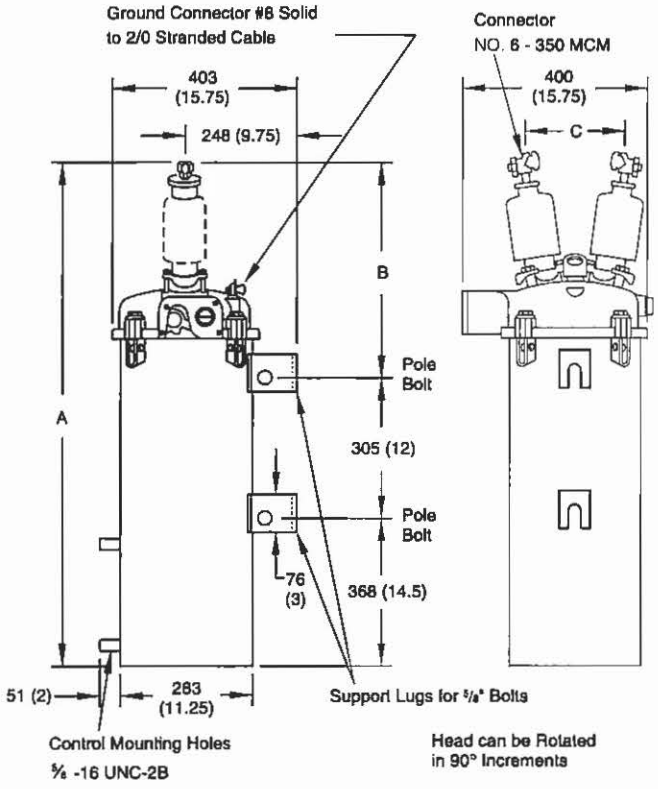

Note: All dimensions are mm (inches).
Dimensions shown are approximate.

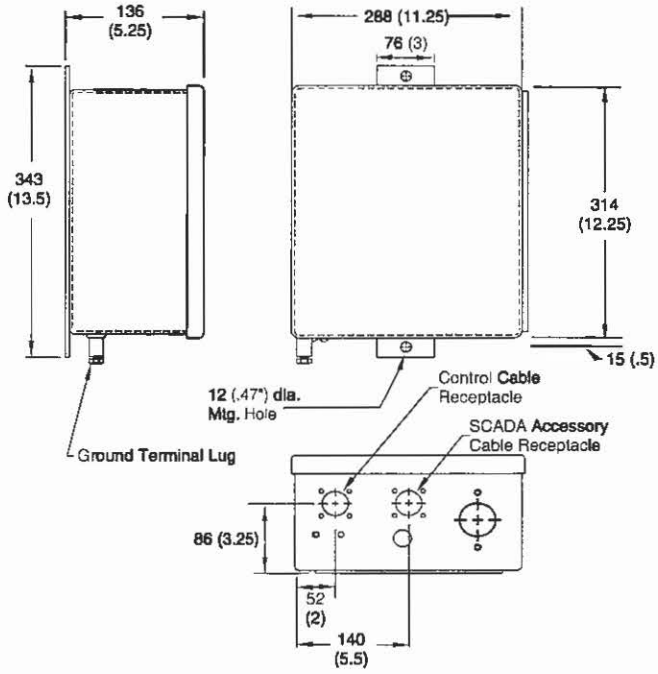

Figure 7.
Control cabinet mounting dimensions.

Dimensions of Recloser

Type	Bushing Type	A	B	C
VXE15	standard	1156 (45.5)	483 (19)	270 (10.5)
VXE15	extra creepage	1237 (48.75)	564 (22.25)	283 (11)
VXE27	standard	1237 (48.75)	564 (22.25)	283 (11)
VXE27	extra creepage	1237 (48.75)	564 (22.25)	283 (11)

Figure 6.
Dimensions of Types VXE15 and VXE27 reclosers.

INSTALLATION PROCEDURE

Installing the Recloser and Control

All reclosers are carefully tested and adjusted at the factory to operate according to published data. Well equipped test facilities, detailed testing procedures, and thoroughly trained personnel assure accurately calibrated equipment. Each recloser leaves the factory ready for installation. Pre-installation testing is not necessary.

Use the following procedure when installing the recloser.

WARNING: This equipment is not intended to protect human life. Follow all locally approved procedures and safety practices when installing or operating this equipment. Failure to comply can result in death, severe personal injury, and equipment damage. G102.1

1. **Check the oil level.** Using the dipstick provided on the recloser head, make sure the oil in the recloser tank is at the proper level (Figure 8). Measure the oil level with the dipstick completely screwed in at 25°C. If the oil is below the minimum level, fill the recloser with oil to the proper level, using the dipstick opening. Do not exceed the maximum oil level, as indicated by Figure 8.

WARNING: Do not operate this equipment out of oil. Oil is the electrical insulating medium within this equipment; operation out of oil will result in internal flashovers that will damage the equipment and can cause death or severe personal injury. G104.2

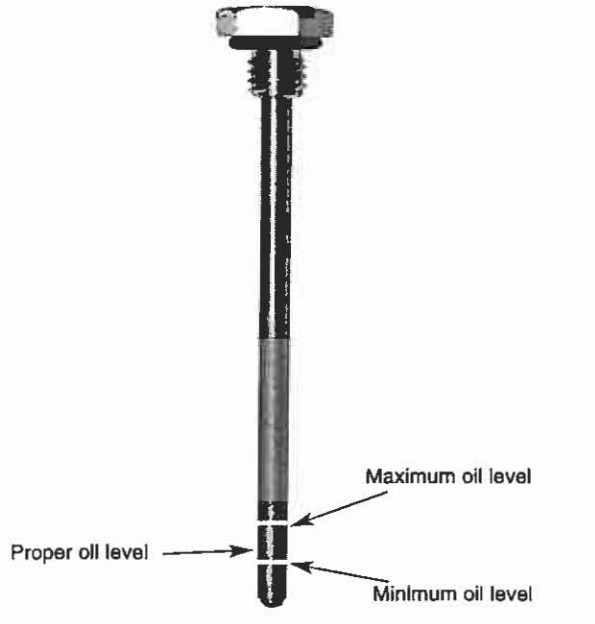

Figure 8.
Type VXE oil dipstick.

CAUTION: This equipment relies on oil to provide electrical insulation between components. The dielectric **strength** of the oil must be checked on a regular basis, as part of the routine maintenance inspection, to ensure that it is at or above minimum dielectric requirements. Use **of this** equipment **with** insulating oil that does not meet minimum requirements can result in internal flashovers that will damage the equipment and can cause personal injury. G107.2

2. **Test the oil dielectric strength.** If the recloser has been stored for some time or is being relocated, perform a dielectric test on the oil in accordance with ASTM-approved testing procedures.
   - **A.** On new equipment, the oil must have minimum dielectric strength of 26 kV.
   - **B.** If the dielectric strength of the oil is less than 26 kV, filter the oil to restore its dielectric strength to acceptable minimum level.
3. **Check the data plate ratings.** Be sure the ratings on the recloser data plates are correct for the installation.

WARNING: Hazardous voltage. Closing coil voltage and current ratings must be compatible with the system application. Refer to the data plates, located on the sleethood of the recloser, for specific rating information. Failure to comply can result in death, severe personal injury, and equipment damage. G129.0

4. **Perform high-potential withstand tests.** Prior to installing the recloser, perform high-potential withstand tests. Refer to the *Testing* section of this manual for high-potential withstand test procedures.
5. **Program and Install the control.** All VXE electronic controls are carefully tested at the factory and shipped with plug-in TCC cards connected and ready for operation. Before installation, inspect the control and make sure that all TCC components are correct for the planned installation. Connect the control battery to the battery plug as shown in Figure 4. Make sure that all DIP switch settings are set correctly and that the control cable is connected between the recloser and control.

CAUTION: Follow all locally approved safety practices when lifting and mounting the equipment. Use the lifting lugs provided. Lift the unit smoothly and do not allow the unit to shift. Improper lifting can result in equipment damage. G106.2

6. **Mount the recloser.** Use the lifting lug located on the head casting and follow approved procedures.

   Note: It is important that the recloser be mounted on the level to accurately check the oil.

⚠ WARNING: Hazardous voltage. Recloser and control must be solidly grounded. Follow all locally approved procedures and safety practices when grounding this equipment. Improper grounding can result in contact with high voltage, which will cause death or severe personal injury. G115.1

7. **Ground the recloser and the control.** (Refer to Figure 9) Make ground connections to the recloser head ground connector. It will accomodate two no. 10 through no. 2 stranded conductors. Ground the control using the ground connector provided at the bottom of the electronic control cabinet for connnecting a no. 14 through no. 4 stranded grounding cable to a suitable ground. Make ground connections in accordance with approved utility standards.

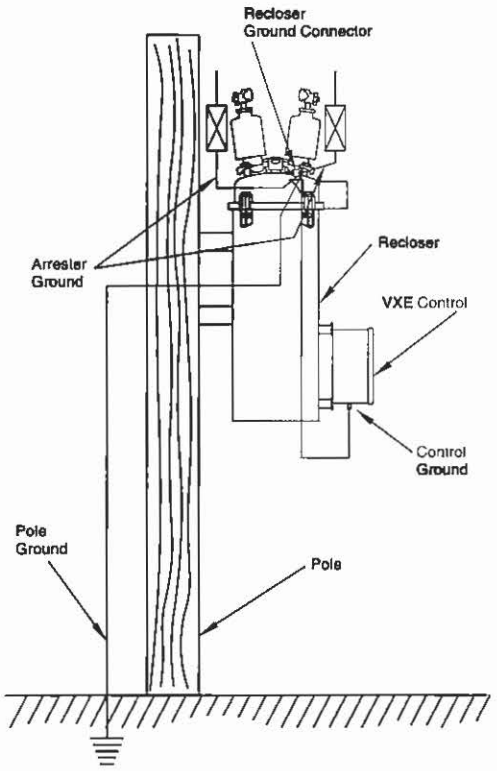

Figure 9.
Recommended grounding method for VXE recloser and control.

8. **Make the high-voltage line connections.** Connect high-voltage lines to the recloser bushing terminals as shown in Figure 10. The source lead must be connected to the source-side bushing, which is located adjacent to the sleet hood. To facilitate connection, the cover of the recloser can be rotated in 90-degree increments with respect to the tank and its mounting bolts. The universal clamp-type terminals accept no. 6 through 350 mcm conductors.

9. **Provide bypass and disconnect switches.** The two disconnect switches and the bypass switch shown in Figure 10 are not required, but they do facilitate maintenance.

Note: The two disconnect switches and one bypass switch are not required, but they are highly recommended.

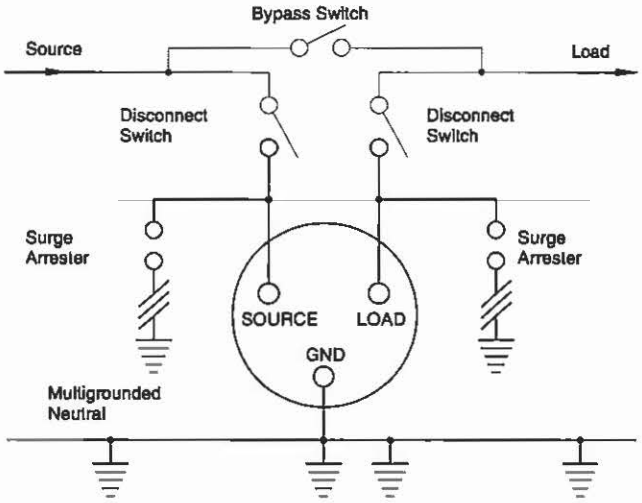

Figure 10.
Connection diagram shows complete surge protection and illustrates switches to facilitate maintenance.

10. **Provide surge protection.** Surge protection on both sides of the recloser is advisable (Figure 10). However, if protection is provided on only one side, it should be located on the source side for line installations and the load side for substation installations.

Placing the Recloser in Service

Always follow locally approved procedures and safety practices when placing the recloser in service. Be sure that the control battery is properly connected. When the recloser is connected and source-side high-voltage lines are energized (by closing the source-side disconnect switch), the recloser can be placed in service. Refer to the connection diagram in Figure 10.

⚠ WARNING: This equipment is not intended to protect human life. Follow all locally approved procedures and safety practices when installing or operating this equipment. Failure to comply can result in death, severe personal injury and equipment damage. G102.1

To place the recloser in service:

1. Move the yellow manual operating handle under the sleet hood to the CLOSE position. This resets the control and synchronizes the control to the recloser. The recloser should immediately close.
2. Close the load-side disconnect switch and open the bypass switch. The recloser is now in service.

Note: To remove from service, close the bypass switch, open the recloser, and open the source and load disconnect switches.

OPERATION

WARNING: This equipment is not intended to protect human life. Follow all locally approved procedures and safety practices when installing or operating this equipment. Failure to comply can result in death, severe personal injury, and equipment damage. G102.1

WARNING: Hazardous voltage. Do not rely on the open position of the yellow operating handle or the contact position indicator; it does not ensure that the line has been de-energized. Always establish a visible disconnect. Failure to follow proper safety practices can result in contact with high voltage, which will cause death or severe personal injury. G114.1

WARNING: Hazardous voltage. Always use a hotstick when working with this equipment. Failure to do so could result in contact with high voltage, which will cause death or severe personal injury. G108.1

Manual Operation of Energized Recloser

To manually operate an energized Type VXE recloser, use a hotstick to engage of the yellow operating handle located under the sleet hood. When the handle is pulled down, the mechanism is tripped to open the main contacts. Contact position is indicated by the OPEN flag of the contact position indicator. When the handle is pushed up, the closing solenoid is energized to latch the main contacts in the closed position.

Non-Reclosing Operation

When the non-reclosing lever has been manually pulled down into the non-reclosing position, any current over minimum-trip rating will cause the control to automatically lock open the recloser on the first trip operation, instead of cycling through the normal operating sequence. The recloser will trip on the programmed TCC for the first trip operation. The non-reclosing lever does not interfere with manual recloser operation. The recloser can be opened or closed manually regardless of the position of the non-reclosing lever.

Automatic Operation

When the VXE recloser is closed and in service, it operates automatically, per the settings programmed in the control, as overcurrent conditions demand. However, once locked out, it must be manually closed by pulling the yellow manual operating handle down and returning the yellow handle to its up (Closed) position. If the VXE control is equipped with the optional SCADA input/output accessory board, the recloser can be remotely closed from lockout.

Lockout Indication

When the recloser is locked-out, the yellow manual operating handle will not drop down from under the sleet hood. Lockout is indicated by the Lockout Indicator located at the bottom of the control cabinet. A round orange target is displayed when the control is in lockout. When the control is not in lockout, the display is black.

TESTING

Type VXE reclosers are carefully tested and adjusted at the factory to operate according to the published data. Well-equipped test facilities, a detailed testing procedure, and trained personnel assure accurate calibration. Permanent records are kept of each recloser's test performance. As a result, each recloser leaves the factory ready for installation, and pre-installation testing is not necessary. However, should verification of recloser operation be desired prior to installation, the following characteristics can be checked:

1. Dielectric integrity of the recloser.
2. Minimum-trip current.
3. Operations sequence of the recloser.
4. Operation of the closing solenoid.

The test findings should agree with the settings programmed in the control. The recloser can be test-tripped with a low-voltage ac source. However, to test operation of the high-voltage closing solenoid, a high-voltage ac source is required.

Safety Requirements

For personnel safety, the recloser, the electronic control, and the high-voltage transformer must be enclosed in suitable test cage to prevent accidental contact with hazardous voltage and all grounding precautions must be observed.

WARNING: Hazardous voltage. The switchgear and high voltage transformer must be in a test cage or similar protective device to prevent accidental contact with the high voltage parts. Solidly ground all equipment. Failure to comply can result in death, severe personal injury, and equipment damage. T221.3

Test Equipment Required

The following equipment is required for these tests:

1. *Variable autotransformer* — 120 V, 10 A.
2. *600:5 BCT* — Slip-on type bushing current transformer, set on the 600:5 tap.
3. *Ammeter* — Must have a rating based on the level of test current. Since the control is responsive to peak current, it is recommended that metering responsive to peak current be used when wave distortion is a problem.

TABLE 6
Closing Solenoid Codes and Minimum Voltage

Closing Solenoid Rating (kV)	Closing Solenoid Code Number	Minimum Allowable Voltage at Recloser When Solenoid Is Energized (V)
VXE15		
2.4	21	2040
4.16–4.8	22	3540
6.0	31	5100
7.2–7.62	23	6120
8.0–8.32	24	6800
VXE27		
11.5	32	9775
12.0–13.2	30	10200
14.4	27	12240
Low-Voltage Closing Coils		
120 Vac/125 Vdc	26	95
240 Vac/250 Vdc	28	190

4. *High-voltage transformer T1* — Used to operate high-voltage closing solenoid (refer to Figure 13). Be sure minimum allowable voltage, shown in Table 6, is maintained at recloser terminals during the 4–5 cycle interval the closing solenoid is energized.
5. *High-voltage test set* — Must be capable of supplying suitable voltages for determining the dielectric withstand capability of the recloser. Sensitive circuit breakers should be included to prevent damage in the event of a flashover. Refer to *Service Information S280-16-4, Type VXE Electronic Recloser Control Tester Operation Instructions.*

Figure 11. 921124KM
The manual closing tool is used to close a de-energized Type VXE recloser.

Manual Closing Procedure

The manual closing tool (shown in Figure 11) permits manual closing of the main contacts of the VXE recloser for test purposes, when a high-voltage source for closing is not available. Minimum-trip current and operating sequence can be tested in this manner. Refer to instructions covering *Manual Operation Of De-energized Recloser* for closing procedure when using the manual closing tool. The best procedure is to have one person operate the closing tool while another regulates the tripping circuit and observes test results.

Manual Operation of a De-energized Recloser

The manual closing tool is only to be used for closing a de-energized recloser.

WARNING: Hazardous voltage. Never use a manual closing tool to close an energized recloser. Manually closing an energized recloser will result in failure of the vacuum interrupter and can result in contact with high voltage, which can cause death or severe personal injury. T236.0

The de-energized recloser is manually closed by raising the yellow manual operating handle to the Closed position and using the manual closing tool to rotate the main operating shaft of the recloser mechanism 90 degrees. Rotation of the main operating shaft must be completed before the undervoltage lockout feature operates. Refer to the *Undervoltage Lockout* section of this manual.

Use the following procedure for manual closing of a de-energized recloser:

1. Remove the pipe plug from the side of the recloser head casting and insert the manual closing tool to engage the main operating shaft.
2. Raise the yellow operating handle to the CLOSED position.
3. Rotate the closing tool about 1/4 turn clockwise, to close the recloser contacts. Avoid forcing the closing tool beyond the mechanism stop: doing so may shear the pin on the main operating shaft.
4. A de-energized recloser can be tripped open by pulling the yellow manual operating handle down to the LOCKOUT position.

IMPORTANT: After each recloser trip, while the closing solenoid plunger is moving downward, two metallic clicks will be heard. The first click is the main toggle latch resetting. The second click is the closing solenoid contactor closing. As soon as these clicks are heard, the closing tool can be turned to close the recloser.

5. Be sure to replace the pipe plug in the head casting before placing the recloser in service.

High-Potential Insulation Level Withstand Tests

CAUTION: Radiation. At voltages up to the specified test voltages, the radiation emitted by the vacuum interrupter is negligible. However, above these voltages, radiation injurious to personnel can be emitted. See *Service Information S280-90-1, Vacuum Interrupter Withstand Test Voltage Ratings Information,* for further information. G109.2

High-potential withstand tests provide information on the dielectric condition of the recloser. Testing is performed at 75% of the rated low-frequency withstand voltage.

Always use a suitable test cage and follow procedures outlined in the *Testing: Safety Requirements* section of this manual.

- For a VXE15 recloser, test at 37.5 kV rms.
- For a VXE27 recloser, test at 45.0 kV rms.

Closed-Contacts High-Potential Test

1. Manually close the recloser contacts.
2. Ground the recloser head casting and control.
3. Apply the proper test voltage to the source-side bushing.
4. The recloser should withstand the test voltage for 60 seconds.

Open-Contacts High-Potential Test

1. Pull down the Manual Operating Handle to open the recloser contacts.
2. Ground the recloser head casting, control, and load-side bushing.
3. Apply the proper test voltage to the source-side bushing.
4. The recloser should withstand the test voltage for 60 seconds.
5. Ground the source-side bushing.
6. Apply the proper test voltage to the load-side bushing.
7. The recloser should withstand the test voltage for 60 seconds.

Test Results

The high-potential withstand tests provide information on the dielectric condition of the recloser and the integrity of the vacuum interrupter.

If the recloser passes the closed-contacts test but fails the open-contacts test, the cause is likely to be a deterioration of the vacuum interrupter. Replace the interrupter and retest to confirm the repair.

If the recloser fails the closed-contacts test, the cause is likely to be a diminished electrical clearance, low oil dielectric strength, or failed insulation. After correcting the problem, retest to confirm the repair.

Minimum-Trip Current Level Test

The minimum-trip current can be checked by using the manual closing tool to close the recloser while it is de-energized and then tripping the recloser with the low-voltage ac source. Assemble and connect the low-voltage test portion of the set-up shown in Figure 12 and proceed as follows:

1. With the yellow manual operating handle in the CLOSED position, use the manual closing tool to close the recloser.

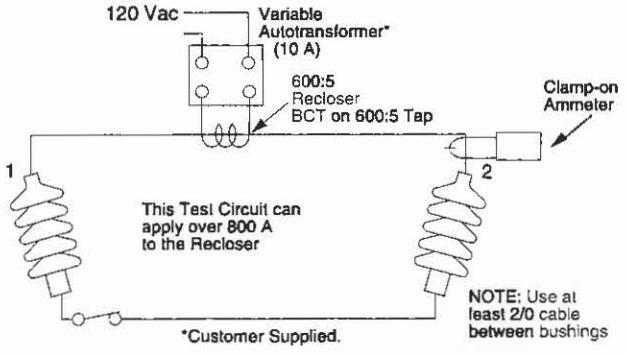

Figure 12.
Suggested test diagram for minimum-trip testing.

WARNING: Hazardous voltage. Never connect a high voltage source for testing closing coil operation and a low voltage source for fault current trip operation, simultaneously. The high- and low-voltage circuits are not compatible. Failure to comply can result in death, severe personal injury, and equipment damage.

T233.2

2. Connect the low-voltage test leads to the recloser bushings as shown in Figure 12.
3. Slowly increase the variable autotransformer voltage from zero, note the ammeter reading when the recloser trips, and compare to the VXE control's programmed minimum-trip value.

Sequence of Operation Test

The operating sequence can be checked by using the manual closing tool to close the recloser while it is de-energized and then tripping the recloser with the low-voltage ac source.

1. Check the number of programmed fast and delayed operations by observing the VXE control DIP switch setting for Operations To Lockout (labeled S2) and the number of TCC 1 fast operations programmed on DIP switches labeled S3.
2. Assemble and connect the low-voltage test portion of the set-up shown in Figure 12 and proceed as follows:
3. With the yellow manual operating handle in the CLOSED position, use the manual closing tool to close the recloser.
4. Connect the low-voltage test leads to the recloser bushings as shown in Figure 12.
5. Using the customer supplied variable autotransformer, apply a test current above the minimum-trip level to trip the recloser.
6. Repeat step 5 until the recloser locks out, which is indicated by the orange control lockout indicator target on the bottom of the control cabinet.

Test Results

Note the number of fast and delayed operations to lockout and compare these numbers to the programmed values.

Electrical Operation of Closing Solenoid Test

Refer to Figure 13 to assemble and connect the equipment. The recloser head casting and the control must be solidly grounded and in a test cage.

WARNING: Hazardous voltage. The switchgear and high voltage transformer must be in a test cage or similar protective device to prevent accidental contact with the high voltage parts. Solidly ground all equipment. Failure to comply can result in death, severe personal injury, and equipment damage. T221.3

1. With the yellow manual operating handle down to LOCKOUT position, energize the high-voltage transformer.
2. Using a hotstick, raise the yellow operating handle to the CLOSED position. The recloser should close immediately, indicating correct operation of the closing solenoid.

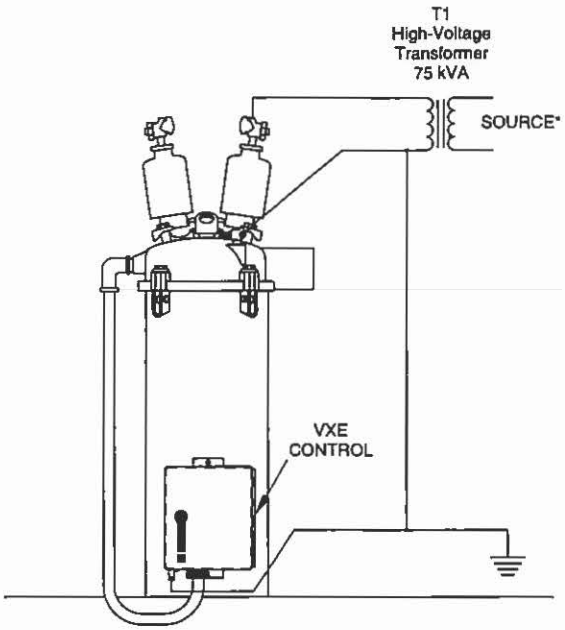

* Source shall not limit the kVA output of the transformer.

Figure 13.
Suggested test diagram for high-voltage closing.

ACCESSORIES

The Type VXE recloser can be equipped with a variety of factory-installed accessories to meet specific application requirements.

Extra-Creepage Bushings

When VXE reclosers are to be installed where extensive salt spray, smog, smoke, or other atmospheric contaminants reduce the effectiveness of porcelain insulation, Extra-Creepage Bushings can be supplied. Standard Type VXE15 recloser bushings provide 295 mm (11-5/8 in.) of creepage; extra-creepage accessory bushings provide 432 mm (17 in.). Type VXE27 recloser bushings provide 432 mm (17 in.) of creepage; extra-creepage accessory bushings provide 673 mm (26-1/2 in.).

Bushing-Type Multi-Ratio Current Transformer

A 450:5 multi-ratio current transformer for load metering can be factory installed externally on the source- or load-side bushing. This transformer has only one primary turn: the bushing rod. Taps on the secondary winding provide the different ratios. The available ratios and their corresponding terminal connections (labeled A, B, C, and D) are shown in Table 7. The terminal arrangement for the tapped secondary is accessible when the cover plate on the transformer housing is removed.

TABLE 7
450:5 Multi-Ratio Current Transformer Ratios and Terminal Connections

Ratio	Terminal
450:5	A-D
300:5	A-C
250:5	B-D
200:5	A-B
150:5	C-D
100:5	B-C

Low-Voltage Closing

The VXE recloser can employ 120 Vac or 240 Vac low-voltage closing. The low-voltage ac closing accessory provides a bridge rectifier, surge varistors, and the factory-installed wiring to accommodate the low-voltage closing power. Customer low-voltage power is connected at the 2-pin connector (polarity independent) in the recloser head. This accessory requires a low-voltage closing coil.

Cable-Locking Sleeve

To prevent detachment of the control cable from the VXE control cabinet by unauthorized personnel, a cable-locking sleeve is available to enclose the cable plug. The plug is passed through the sleeve and the sleeve is then fastened from inside the control cabinet. There is no access to the cable receptacle without opening the locked cabinet door and detaching the sleeve.

SCADA Input/Output Board

An optional factory-installed SCADA input/output circuit board is available for the VXE control to provide remote operation capabilities. The SCADA I/O board also includes dry contacts to provide remote status information.

All remote features are accessed through a 19-pin receptacle (Type MS 22-14 female) mounted on the bottom of the control cabinet.

Remote Lockout

Remote lockout provides the ability to trip and lock out the recloser from a remote signal. Operation requires a momentary contact closure of 0.1 second between pins D and B.

Remote Close With Cold-Load Pickup

The remote close with cold-load pickup feature provides the control with the capability of being remotely closed from lockout by momentary contact closure (0.1 second) between pins E and B.

Cold-load pickup is active for a programmable time, during which the control will be in the one-operation-to-lockout mode and overcurrent timing will be on TCC2. If no overcurrent is present during this interval, the control will reset to the programmed operating sequence.

Remote Non-Reclose

Remote non-reclose provides the ability to remotely place the control in the non-reclose mode by momentary contact closure (0.1 second) between pins F and B.

Recloser Open/Close Status Indicator

The recloser status indicator provides a dry contact (SPDT rated 1 A at 28 Vdc) to indicate open or closed status of the recloser contacts. Contact closure occurs between pins H and K when the recloser is closed.

Remote Lockout Status

The remote lockout status feature provides an open contact between pins L and K when the control is not locked out and a closed contact between pins M and K when the control is locked out. Contacts are rated 1 A at 30 Vdc.

Remote Non-Reclose Status

The remote non-reclose status indicator provides a closed contact (rated 1 A at 28 Vdc) to indicate when the recloser is in the normal reclosing mode. Contact closure occurs between pins J and K when the recloser is in the reclose mode.

Remote Analog Current Monitor

The remote analog current monitor provides a 0 to 0.5 mA dc signal corresponding to 0 to 500 A of line current, between pins C (+) and B (-). The factory calibration point is set at 35 A with a 2.5 kΩ resistor across the output with accuracy of ±10% from 15 to 400 A.

MAINTENANCE INFORMATION

CAUTION: This equipment requires routine inspection and maintenance to ensure proper operation. If it is not maintained, it can fail to operate properly. Improper operation can cause equipment damage and possible personal injury. G105.1

CAUTION: This equipment relies on oil to provide electrical insulation between components. The dielectric strength of the oil must be checked on a regular basis, as part of the routine maintenance inspection, to ensure that it is at or above minimum dielectric requirements. Use of this equipment with insulating oil that does not meet minimum requirements can result in internal flashovers that will damage the equipment and can cause personal injury. G107.2

For detailed maintenance instructions, refer to *Service Information S280-16-2, Type VXE15 and VXE27 Electronically Controlled, Single-Phase Recloser Maintenance Instructions.*

Frequency of Maintenance

To assure proper and trouble-free operation, reclosers must be maintained when they have operated the equivalent of a rated duty cycle (see Table 3).

Note: ANSI C37.61, *"Guide for the Application, Operation and Maintenance of Automatic Circuit Reclosers"*, gives a procedure for converting the rated standard duty cycle into an equivalent duty cycle based on the actual operating duty of the recloser.

Maximum Recloser Maintenance Intervals

In the absence of specific operating experience, use the following guideline to establish maintenance intervals:

- Vacuum interrupting reclosers should be maintained at least every six years.

Replacement Parts

Replacement parts for Kyle® reclosers are available through the factory Service Department. Only factory-authorized replacement parts are to be used. To order replacement parts, refer to the current Replacement Parts price list for catalog numbers and pricing. Contact your Cooper Power Systems sales representative for additional information and ordering procedures.

Factory-Authorized Service Centers

Factory-authorized service centers are located throughout the continental United States to provide maintenance, repair, and testing services for Kyle reclosers. For further information, contact your Cooper Power Systems sales representative.

Factory Maintenance Classes

The factory Service Department offers recloser maintenance training classes. These classes, taught by experienced service technicians, are held at the factory's in-house training facility. For additional information, contact your Cooper Power Systems sales representative.

Instructional Video Cassette Program

A video cassette maintenance training program; *KSPV1 General Maintenance and Inspection Procedures for Kyle Reclosers* is available as a supplemental training aid for maintenance personnel. This video program, developed for use in the factory training classes, is to be used in conjunction with existing service literature. For additional information, contact your Cooper Power Systems sales representative.

KA2048-385 Rev: 02

COOPER Power Systems

© 2002 Cooper Power Systems, Inc.
Kyle® is a registered trademark of Cooper Industries, Inc

P.O. Box 1640
Waukesha, WI 53187
www.cooperpower.com

SERVICE DATA
OIL CIRCUIT RECLOSERS • SINGLE-PHASE
2.4 thru 23 kv • 5 thru 100 amperes continuous • Type E
2500 amperes interrupting rating at 23 kv

Connection Instructions for Multi-phase Operation of Type E Reclosers with Electrical Shunt Lockout Solenoid

VALUE EQUALS BENEFITS OVER COST

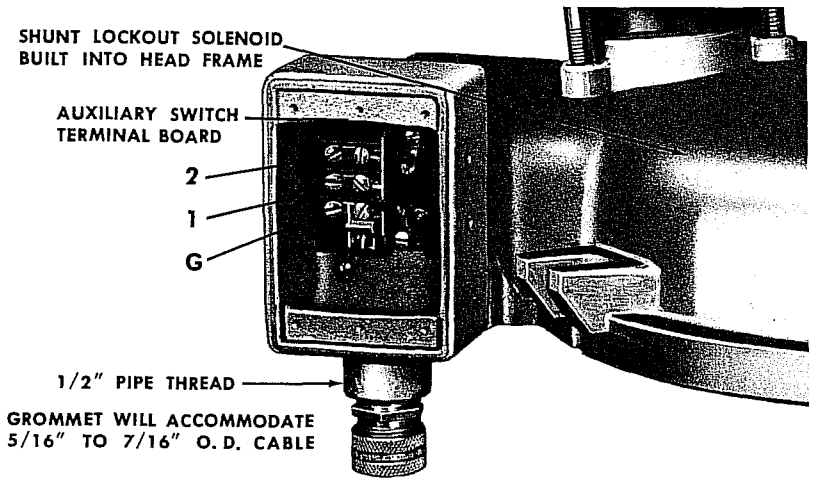

Figure 1. Junction box on sleethood has one auxiliary switch.

For three-phase protection with independent tripping and three-phase lockout, three single-phase Type E reclosers, each equipped with a factory installed shunt-lockout solenoid and auxiliary switch, can be electrically interlocked and connected to an external source. The reclosers must have the same electrical ratings, time-current characteristics and operating sequences. The external source is connected to a terminal strip in the switch housing that is mounted on the recloser head.

If remote indication of contact position is desired an additional auxiliary switch is included in a larger housing that will accommodate more terminals. See figure 2.

SOURCE RATINGS

A number of different solenoids are available to adapt to possible source voltage being used. For reliable operation the source voltage should be within the tripping voltage range specified below.

SHUNT TRIP COIL VOLTAGE RATING	TRIPPING VOLTAGE RANGE
115 ac	95 – 125
230 ac	190 – 250
12 dc	9 – 13
18 dc	14 – 20
24 dc	18 – 25
36 dc	28 – 40
48 dc	36 – 50
110 dc	80 – 117
125 dc	90 – 130

CONNECTION

Following installation of the reclosers and before making primary connections, interconnect the reclosers at the terminal strips contained in the junction boxes mounted on the sleethood in accordance with the wiring diagram. See figure 3, page 2.

Referring to the wiring diagram, the high voltage portion of the reclosers has been deleted. One side of the shunt lockout solenoid in each recloser is directly connected to the line marked "G." This line should be grounded at the tank unless it

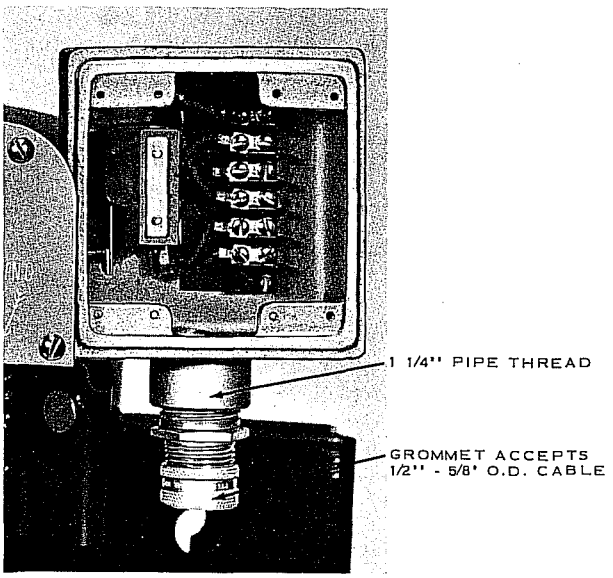

Figure 2. Junction box with additional auxiliary switch and terminals.

conflicts with other grounds in the secondary. The other side of the shunt lockout solenoid in each recloser is connected through its auxiliary switch to the line marked "2," which is a floating line. At the time that any one of the reclosers locks out, as its handle comes down, it throws the auxiliary switch for that particular recloser over to the contact marked No. 1. This disconnects the lockout solenoid in that particular recloser and energizes the other shunt

This supersedes Bulletin No. 53044 dated 10/54.

SERVICE DATA
OIL CIRCUIT RECLOSERS • SINGLE-PHASE
2.4 thru 23 kv • 5 thru 100 amperes continuous • Type E
2500 amperes interrupting rating at 23 kv

lockout solenoids by connecting their auxiliary switch position designated by No. 2 to line No. 1 through the auxiliary switch on the unit which has locked out.

This energizes the other shunt lockout solenoids and they will lock out their respective reclosers. As the other reclosers are locked out, when their handles come down they disconnect their shunt lockout solenoids. To energize the shunt lockout solenoids at any time, it is merely necessary to connect line No. 1 to line No. 2. This can also be done with the optional push button shown on the diagram or if ground fault relay tripping is desired, a ground fault relay can be substituted for the optional push button.

The isolation switch is necessary to disconnect the source from the shunt lockout solenoids so as to allow the reclosers to be reclosed. To reclose the multi-phase installation, it is merely necessary to open the isolation switch, close the operating handles of the Type E recloser, reclose the isolation switch, and everything is set for another complete operation.

3 PHASE SHUNT INTERCONNECTION OF "E" RECLOSERS

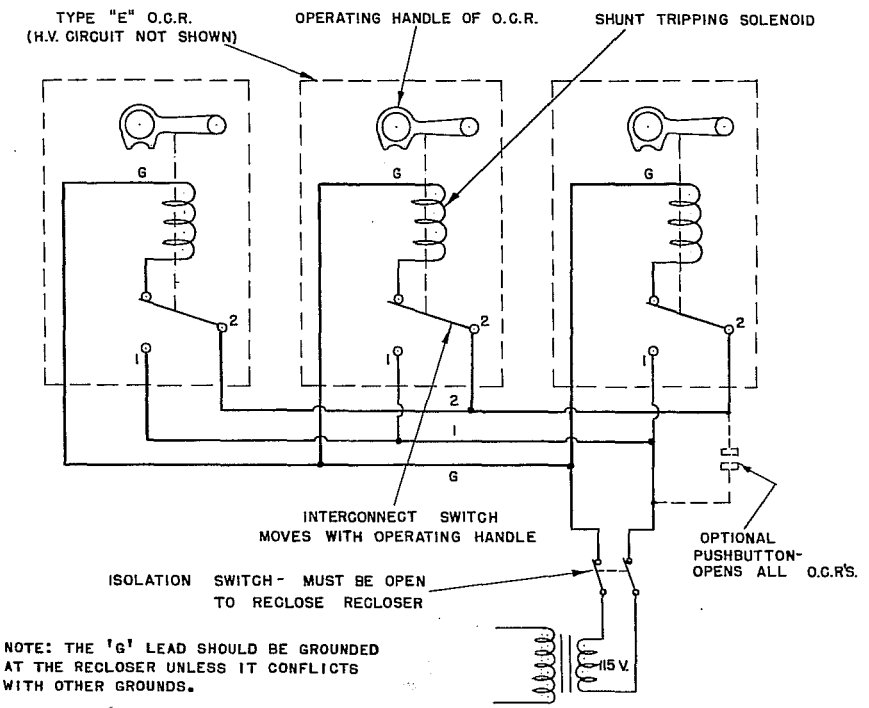

Figure 3. Typical 3-phase interconnection using 115 volt ac source.

When an additional auxiliary switch is provided in the junction box for remote indication, use terminals 2, 1 and G as indicated in the wiring diagram, Figure 3, for use with the single switch. See Figure 4 for connection of terminals 3, 4 and 5.

TESTING

If necessary, a simple continuity test can be made with a volt-ohmmeter. With the recloser operating handle down, continuity should exist between terminals 3 and 4 and between 1 and 2. There should be no continuity between 3 and 5.

With the recloser operating handle up, read continuity between terminals 3 and 5. No continuity should be seen between 3 and 4 or 1 and 2.

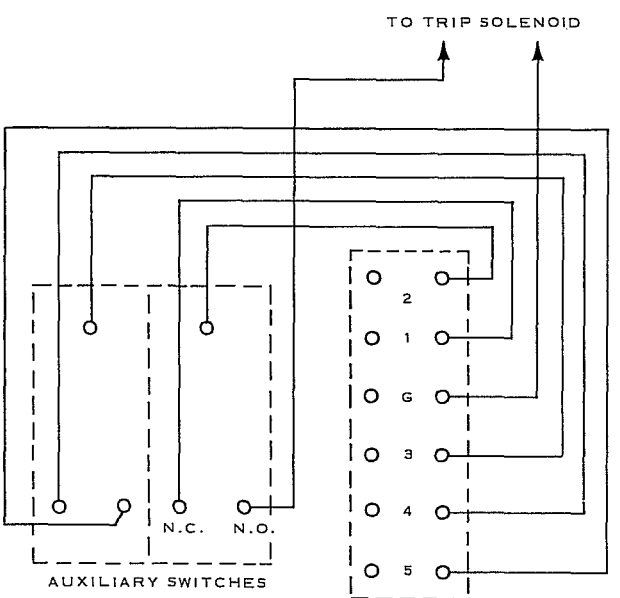

Figure 4. Wiring diagram when additional auxiliary switch is used for remote indication.

Shunt interlock terminal 2, 1, & G.
Auxiliary switch terminal 3, 4, & 5.
3 Common
4 Normally closed (Recloser open)
5 Normally open (Recloser open)

Reclosers

Type E, Single-Phase
Field Installation of KA704E Non-reclosing Cover Assembly

23 kv • 5 thru 100 Amperes

Replaces 280-20SC-2 dated 1/68
No change in text

FOREWORD

More safety for a line crew working on an energized line on the load side of a recloser can be provided with the installation of a KA704E non-reclosing cover assembly. The non-reclosing assembly includes a non-reclosing lever that is normally in the up position when the recloser is set for normal recloser service. Pulling the non-reclosing lever down sets the recloser to lockout in one operation assuring that it will not reclose.

INSTALLATION

Field changeout of assemblies is simple and can be relatively inexpensive if it is done in coincidence with the recloser's routine maintenance schedule. The non-reclosing assembly is furnished with two major assemblies, Figures 1 and 2, which must be combined before attachment to the recloser mechanism. Also included are additional parts which must be attached to the toggle and trip lever in the operating mechanism, as shown in Figure 1, before combining

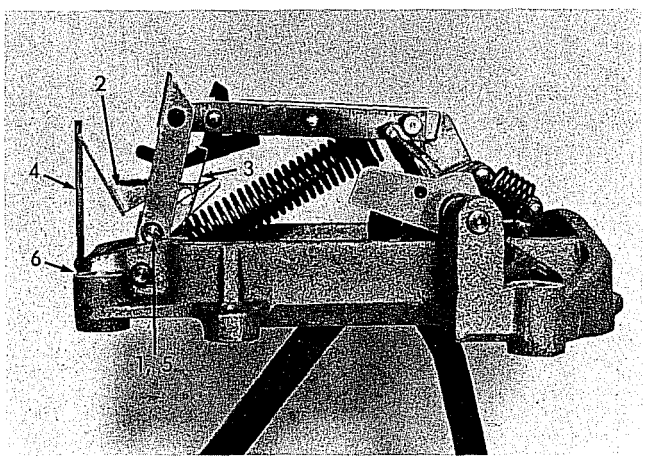

Figure 1

the major assemblies. These are numbered as assembled. (1) Pin for new trip lever (2) Trip lever mounted in toggle channel (3) Torsion spring between toggle channel and trip lever pin and lockout latch (4) Stop bracket for trip lever and (5) C-ring for the trip lever pin (6) Two self tapping screws to fasten the stop bracket. The operating mechanism will then be ready for mounting into the cover assembly. Prior to this mounting, however, certain parts must be salvaged from the old assembly to complete the fastening and installation of the new non-reclosing assembly. To install:

1. Remove recloser from service.
2. Loosen the four bolts that secure the tank to the head casting and lift the head and mechanism out of the tank.
3. Detach the bushing leads at the interrupting structure. Remove bushing clamps and lift out the bushings.
4. Take off the four hex head nuts and lockwashers that fasten the solenoid frame to the support stringers.
5. Pull solenoid frame and mechanism off of the insulating support stringers. The solenoid plunger and the hydraulic pump piston will be withdrawn from their cylinders. Detach pump piston for reassembly. Salvage the following parts from the old head assembly to complete the new: pump piston and pin, two short and two long capscrews with their accompanying flat washers and spacers, the counter and its fasteners as well as the recloser nameplates. Discard old head gasket.
6. Combine the operating mechanism as completed in Figure 1 with the cover assembly in Figure 2. When assembling, the yellow operating lever and the non-reclosing lever should be in the open position. This will enable linking the operating mechanism to the inside lever pointed out by arrows in Figures 2 and 3.

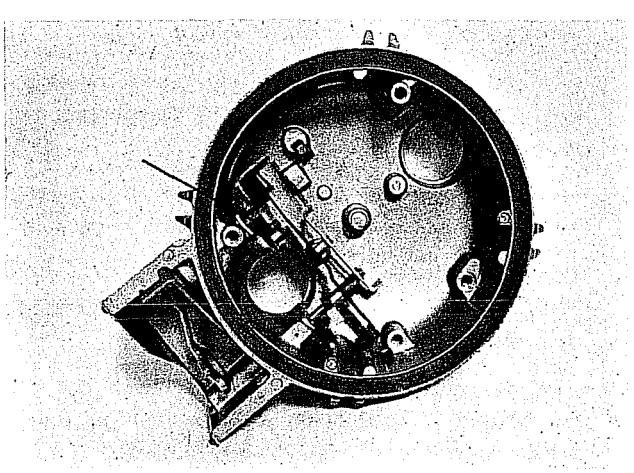

Figure 2

These instructions do not claim to cover all details or variations in the equipment, procedure, or process described, nor to provide directions for meeting every possible contingency during installation, operation, or maintenance. When additional information is desired to satisfy a problem not covered sufficiently for the user's purpose, please contact your McGraw-Edison Power Systems Division sales engineer.

7. Fasten operating mechanism to head after linkage with the salvaged capscrews, flat washers and spacers as shown in Figure 3. Also attach salvaged hydraulic piston, counter, nameplates and stringers. The completed mechanism and cover can now be installed on the solenoid frame guiding the plunger and pump piston into their respective chambers and be fastened with the four hex nuts that secure the support stringers.

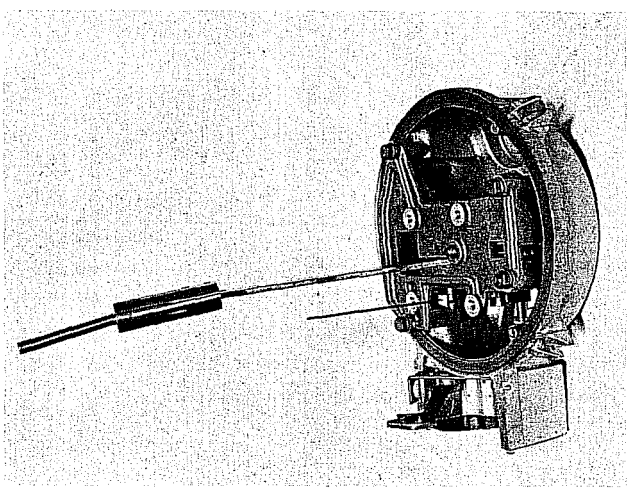

Figure 3

8. Open non-reclosing lever and adjust capscrew and palnut as indicated in Figure 4.
9. Replace bushings into the new cover assembly and return the bushing leads to the contact box as removed.
10. Lower the mechanism into oil until pump piston, trip piston and plunger are completely immersed.
11. Operate recloser manually with the yellow operating lever several times to remove any entrapped air from the hydraulic system.
12. Perform any other maintenance services that may be required, especially an oil change, before retanking and returning recloser to service.

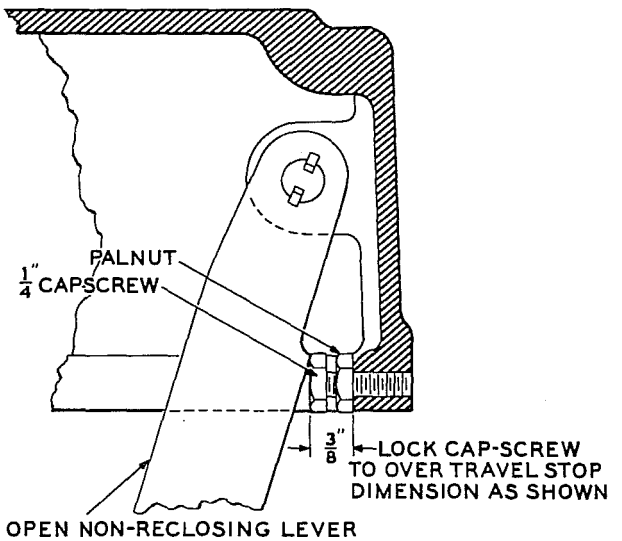

Figure 4

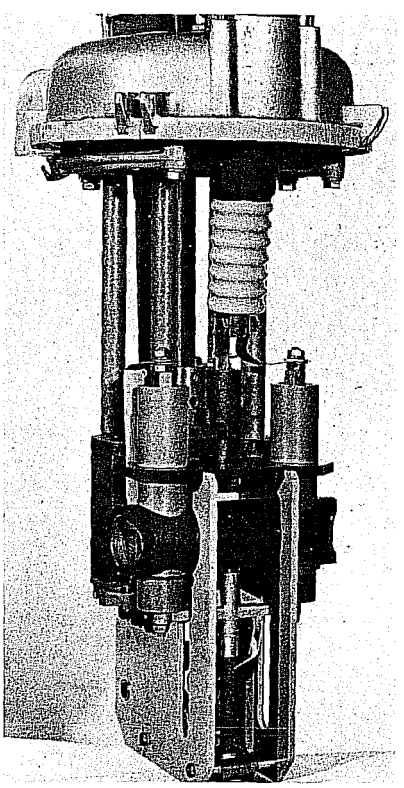

Figure 5
Assembled and Untanked Type E Recloser

Reclosers

COOPER
Cooper Power Systems

Service Information

Type E
Maintenance Instructions

S280-25-5

Applicable to Serial Numbers 52000 and above.

CONTENTS

Introduction 1
Description 1
Specifications and Ratings 3
General Maintenance Intorrnation 3
Oil Condition 3
Maintenance Intervals 3
Oil Dielectric Strength 3
Periodic Inspection and Maintenance 3
Shop Maintenance 4
Arc Interrupting Assembly 4
Series-Trip Solenoid Disassembly.....6
Series-Trip Solenoid Reassembly 6
Hydraulic Mechanism 9
Changing Time-Current Settings 14
Changing Operating Sequence 14
Sequence Adjustments 14
Bushings 15
Head Mechanism 16

INTRODUCTION

Service Information *S280-25-5* covers the maintenance instructions for the Type E hydraulically controlled, single-phase, oil-interrupting recloser. The manual includes a general description of the recloser and its operating principles and instructions for periodic inspection, testing, and shop repairs. Service parts lists keyed to exploded-view drawings of the unit, along with ordering information, are included in the manual.

DESCRIPTION

A Type E hydraulically controlled, oil-interrupting recloser (Figure 1) is a self-contained device that senses and interrupts fault currents on a single phase of a distribution line. The recloser automatically recloses and, if the fault is temporary, restores service. If the fault is permanent, the recloser locks open after one, two, three or four operations, depending upon its setting. Automatic resetting of this device enables it to distinguish between permanent and temporary faults. Thus, if a fault is temporary, the recloser resets and is then ready for a complete sequence should another fault occur.

Operating sequences of the recloser can be all fast, all delayed, or a combination of fast followed by delayed operations. Furthermore, any one of three delay curves can be used to assure coordination with other reclosers or protective devices. On coordinated systems, fast recloser operations are used to clear temporary fault currents before branch-line fuses are damaged. Subsequent delayed openings allow time for fault currents to be cleared by branch-line fuses. Outages caused by permanent faults are thereby confined to shorter sections of line.

Tripping is initiated by a series-connected coil. Current-carrying and interrupting capacities vary with the operating coil's rating, which is selected to meet circuit requirements. A non-reclosing feature (Figure 2), standard on all Cooper Power System's reclosers, is set with a hookstick-operated lever for one operation to lockout without removing the recloser from service.

Figure 1.
Type E single-phase, hydraulically controlled oil circuit recloser.

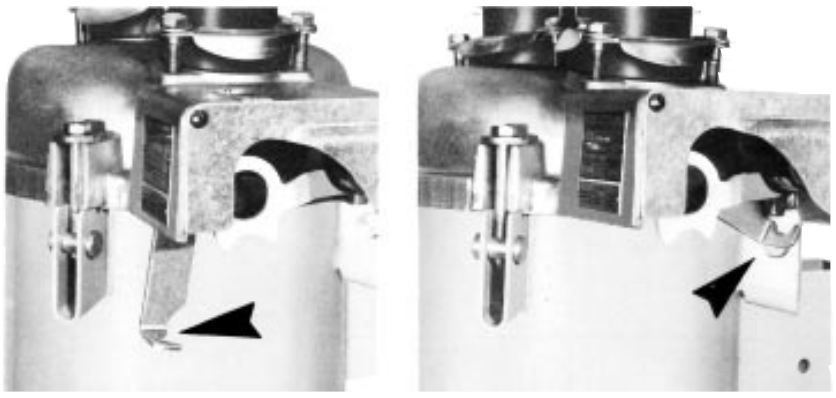

Figure 2.
The non-reclosing feature is set with a handle under the sleet hood (see arrow). When the handle is down (left), the recloser will trip on overcurrent and lock out without reclosing. When the handle is up (right), the recloser will operate according to its internally set program.

These instructions do not claim to cover all details or variations in the equipment, procedure, or process described, nor to provide direction for meeting every possible contingency during installation, operation, or maintenance. When additional information is desired to satisfy a problem not covered sufficiently for the user's purpose, please contact your Cooper Power Systems sales engineer.

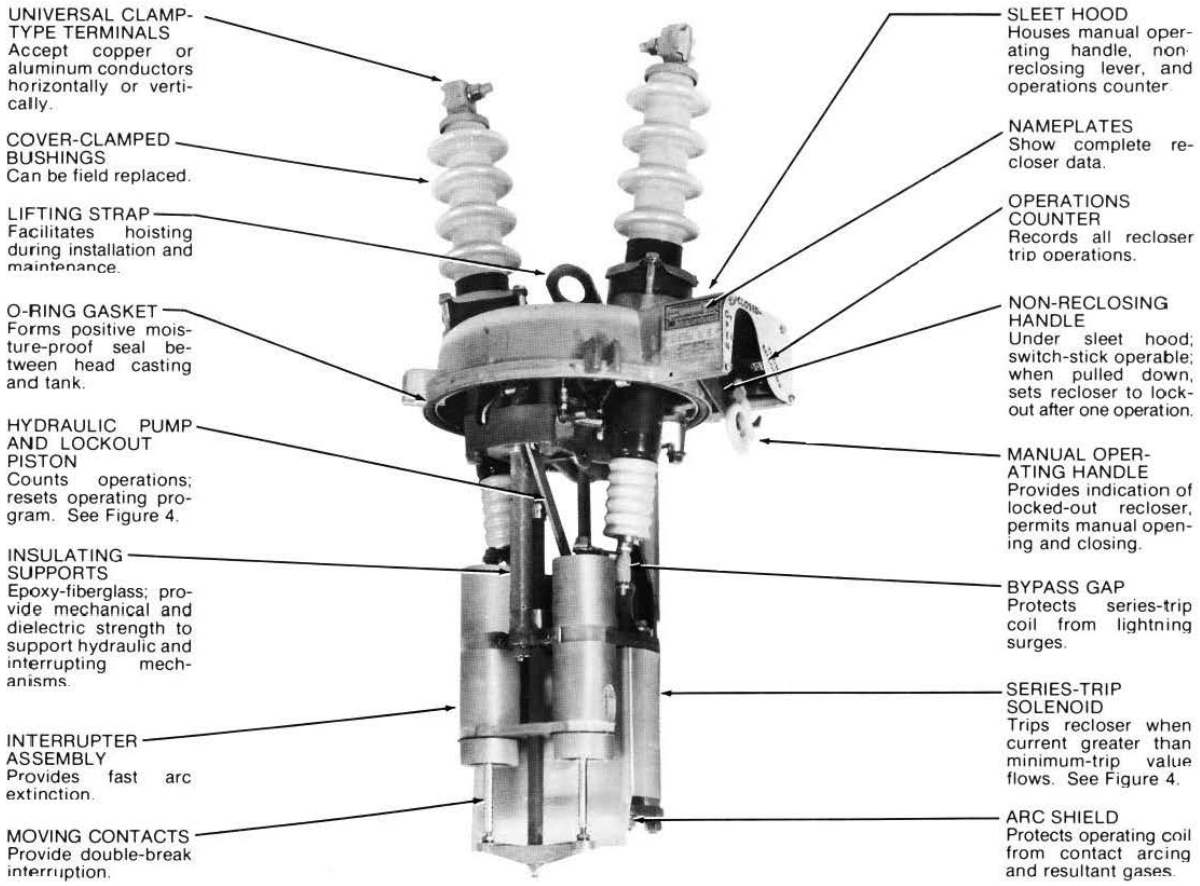

Figure 3.
Untanked view of Type 4E recloser

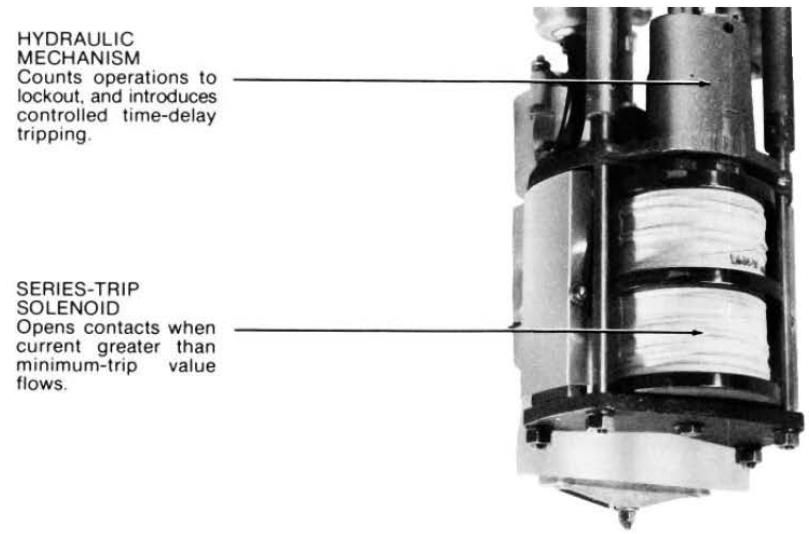

Figure 4.
Hydraulic mechanism and series-trip solenoid.

SPECIFICATIONS AND RATINGS

Table 1
Specifications

Nominal operating voltage (rms kV)	24.9
Maximum design voltage (rms kV)	27
Impulse withstand (BIL), 1.2 X 50µsec wave (crest kV)	150
60-Hz withstanding (rms kV)	
Dry, one minute	60
Wet, ten seconds	50
Reclosing time (see)	2
Bushing creepage distance (in.)	13-5/8

Table 2
Interrupting Ratings

Trip-Coil Continuous Current (amps)	Minimum-Trip Current (amps)	Interrupting Current (rms sym amps)
5	10	300
10	20	600
15	30	900
25	50	1500
35	70	2100
50	100	2500
70	140	2500
100	200	2500

Table 3
Duty Cycles

% Interrupting Rating	Maximum Circuit X/R Ratio	Number Unit Operations	Total Unit Operations
15-20	3	32	68
45-55	5	24	
90-100	12	12	

GENERAL MAINTENANCE INFORMATION

Type E reclosers are usually applied to increase service continuity, reduce operating costs, and increase revenue. The E's high load and interrupting ratings make it suitable for use in important substations. The Type E can perform at peak efficiency and provide reliable circuit protection if adequate maintenance is performed. Maintenance is relatively easy and inexpensive when compared with the savings achieved by the use of reclosers.

OIL CONDITION

Oil provides the internal insulation barrier from phase to ground, and must be replaced before it deteriorates below a safe dielectric level. Replace the oil if its dielectric strength falls below 22 kV.

New oil should always be filtered before using, even though it is obtained from an approved source. Passing the oil through a blotter press will remove free water and solid contaminants such as rust, dirt, and lint. Keep aeration to a minimum during filtering to prevent moisture in the air from condensing in the oil and lowering its dieletric strength.

Used oil must be treated before reusing. Filtering may remove abosrbed and free water and other contaminants to raise the dielectric strength to acceptable levels. However, filtering does not always remove water-absorbing contaminants, and the dielectric strength may fall rapidly after being returned to service. Therefore, the recloser should be filled with new oil, or oil that has been restored to like-new condition. Oil used in these reclosers conforms to ASTM Standard D3487, Type 1; its property limits are shown in *Reference Data R280-90-1. Oil Specifications and Tests.*

Maintenance Intervals

Frequency of maintenance depends upon local climatic conditions and the interrupting duty imposed on the recloser. Cooper Power System's recommends the unit be completely inspected, cleaned, and filled with new oil at least once each year. If the Type E operates through a duty cycle in less than one year, periodic maintenance should be performed then. The NEMA standard duty cycle for reclosers is listed in Table 3.

Oil Dielectric Strength

Although the Type E can go through the complete duty cycle without requiring an oil change, more frequent oil changes will be required if the majority of fault currents are near the maximum interrupting rating. Oil that has become contaminated with carbon and sludge, or has a dielectric strength of 22 kV or lower, should be replaced. Use only oil that meets the requirements for Cooper Power System's switchgear. Refer to Cooper Power System's *Reference Data R280-90-1.*

PERIODIC INSPECTION AND MAINTENANCE

Each periodic check should include at least the following steps:

1. **Bypass and remove recloser from service.**
   Replace with a temporary fuse or spare recloser.
2. **Inspect external components.**
   A. Check for broken bushings, paint scratches, or other mechanical damage.
   B. The counter reading should be noted and entered in the recloser record.
   C. Move the manual operating lever up and down to see if the counter is fun tioning properly. Leave the recloser in the open position.
3. **Remove mechanism from tank.**
   Loosen four bolts that secure the tank to the head casting, and loosen the gasket seal between tank and head casting. The gasket seal can be broken by carefully prying apart the head and tank. Hoist the mechanism out of the tank; allow oil to drain.
4. **Clean all internal components.**
   A. Remove all traces of carbon by wiping with a clean, lint-free cloth.
   B. Flush mechanism with clean, dry transformer oil.

> **CAUTION**
> Never use volatile solutions, detergents, or water-soluble cleaners

5. **Inspect moving contacts.**
   Arcing tips of the moving contacts can experience a limited erosion before replacement is necessary. Contacts should be replaced before erosion of the load-current-transfer surfaces impairs their effectiveness.

   If moving contacts appear to have further useful life, inspection of the arc interrupter chamber and stationary contacts can be omitted. These components are designed to last at least as long as the moving contacts.

Figure 5.
Moving contact assembly.
Background: After severe duty.
Foreground: New

6. **Inspect interrupter and exhaust port.**
   If the stationary contacts or fiber plates are badly rerroded or burned, the complete stationary tube assemblies should be replaced. In addition, the stationary tube assemblies should be replaced any time the moving contacts are replaced. See the “Arc-Interrupting Assembly” section of this manual for disassembly instructions.

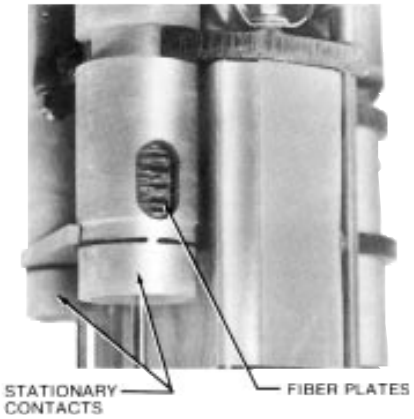

Figure 6.
Inspecting stationary contacts and arc-interrupting chambers.

7. Checkthe dielectric strength of the insulating oil.

A. The dielectric strength should not be less than 22 kV when tested with a 0.1-in. gap in accordance with methods specified in ASTM D117.

B. Low.dielectric strength usually indicates the presence of water or carbon deposits.

8. Remove old oil.

If oil must be replaced, drain the tank and clean out all sludge or carbon deposits.

9. Inspect tank liners.

Note that two liners are employed. The inner liner is fibrous and readily absorbs any moisture present Soft or spongy areas indicate water has been absorbed. Replace the liner if these areas are present. The outer liner need areas are present. The outer liner need not be replaced unless it is cracked.

Rinse the tank with clean oil, and wipe out all carbon traces with a clean lint-free cloth.

10. Fill tank with oil.

Use only new transformer oil with dielectric strength of al least 30 kV as measured across a standard 0.1-in. gap in accordance with methods illustrated in ASTM Publication D117.

Fill the tank to the correct level with oil (8.4 gallons), indicated by a line on the fiber liner.

11. Check head gasket.

Clean and examine the head gasket Replace if it is cracked, checked, cut, or otherwise damaged, or if it has been permanently deformed.

1 2.Replace cover and mechanism in tank.

A. Wipe clean the O-ring type gasket the gasket recess in the recloser cover, and the tank gasket seal.

B. Position the four head bolts and tighten alternately (torque head bolts to 11 - 16 ft-lb). The cover can be rotated in steps of 90 degrees with respect to the tank and its mountings.

Operate the unit manually about eight times to be sure no air remains in the hydraulic mechanism.

13.Test mechanical operation.

An easy, effective test can be performed as follows:

A. Move the operating lever to the CLOSED position and wait 4 minutes.

B. Move the operating lever to the OPEN position and listen for opening of the main contacts. Then quickly move the lever back to the CLOSED position.

C. Continue opening and closing the recloser manually until lockout is achieved. This can be determined by listening for unlatching of the lockout mechanism and also by noting that recloser mechanism will not latch when the lever is moved to the CLOSED position.

This test can be used to determine the number of operations to lockout. The number of fast and delayed operations can be noted also. Fast operations can be identified because the main contacts will open almost instantaneously when the operating lever is moved to the OPEN position. When delayed operations occur, a short time elapses between operation of the lever and opening of the contacts.

14. Direct-current testing.

Use the following procedure to prove the recloser is in good operating condition.

A. Move the operating lever to the CLOSED position and wait 4 minutes.

B. Connect a storage battery across recloser terminals. Count the operations to lockout. If the correct number of operations did not occur, wait five minutes and repeat the test. Air in the hydraulic system can cause incorrect operation. Refer to Tables 4 and 5 for the number of 6- or 12- volt batteries to use for testing Type E reclosers.

Table 4
6-Volt Battery Requirements for Tripping

Recloser Rating (amps)	Batteries Required (Parallel)	Cable Size (AWG)
5	**	
10	**	
15	2	
25	2	Short lengths
35	2	of no. 6 or
70	2	larger
100	2	

*Fully charges and in good condition.
**Can not be tested in this method.

Table 5
12-Volt Battery Requirements for Tripping

Recloser Rating (amps)	Batteries Required (Paralleled)	Cable See (AWG)
5	**	
10	**	
15	**	
25	4	Short lengths
35	4	of no. 6
50	4	larger
70	4	
100	4	

*Fully charges and in good condition.
**Can not be tested in this method.

SHOP MAINTENANCE

When shop maintenance or repairs are to be performed, remove the four bolts that secure the tank and head casting. Trip the recloser and lift the mechanism out of the oil and allow to drain. Operations described in this section should be performed in the cleanest conditions pos sible.

NOTE: Maintenance work-except for bushing replacement-will be simplified if the work bench (table or stand) is arranged so the mechanism can be inverted (bushings down). Many of the following figures show the recloser in this inverted position.

Arc-Interrupting Assembly

When erosion has spread close to the load-current transfer surfaces of the moving contacts, the entire arc-interrupting assembly should be removed and replaced.

Follow these procedures to perform this work:

1. Remove self-locking nut and washer from end of contact rod(Figure 7). Then drive out the roll pin that aligns the moving contact yoke. Lift off the moving contacts.

2. Remove the bronze capscrew, lockwasher and flat washer (right-hand tube only), from the end of each contact tube; remove the leads to each contact tube.

3. Remove the retaining-snap rings that secure the contact tubes to the moving contact rod guide (Figure 8).

4. Remove the capscrews, lockwashers and flat washers to release the contact tube wedges (Figure 9).

5. Grasp both contact tubes near the free ends and pull apart enough to release the tubes from the solenoid frame (Figure 10). Remove the fiber moving contact rod guide.

6. If further maintenance is to be performed, do not reassemble the interrupting assembly yet When reassembling, reverse the procedures listed in the preceding steps 1 through 6.

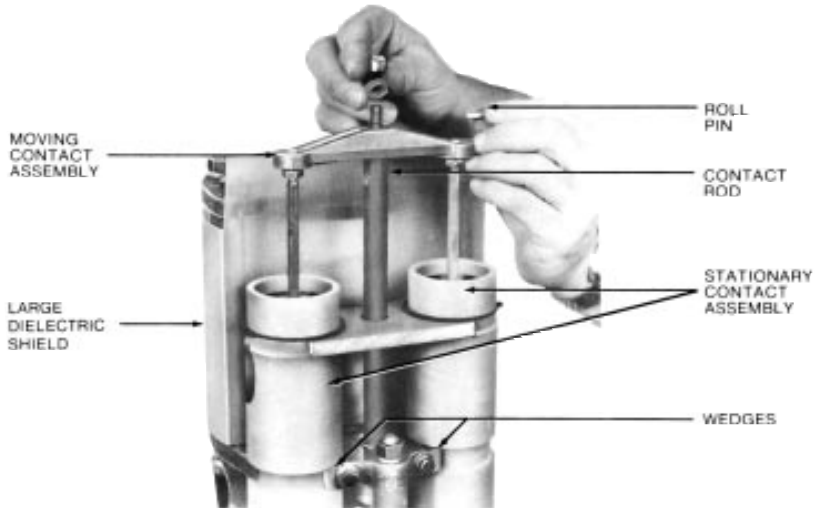

Figure 7.
Removing contact yoke assembly.

Figure 10.
Removing contact tubes.

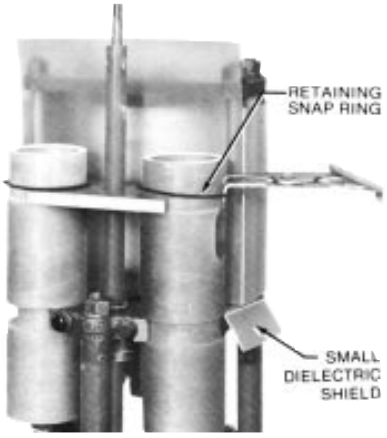

Figure 8.
Removing retaining-snap rings.

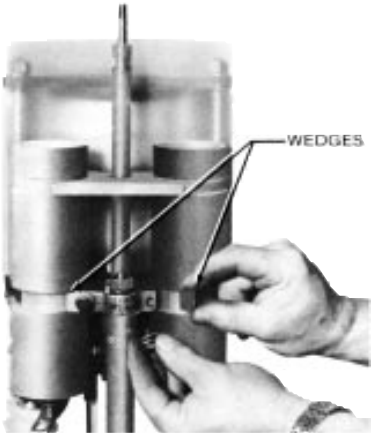

Figure 9.
Removing contact tube wedges.

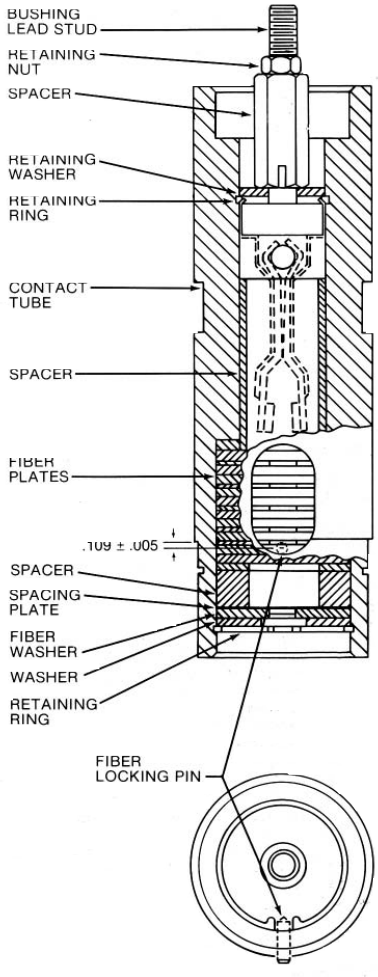

Figure 11.
Cross-sectional view of contact tube.

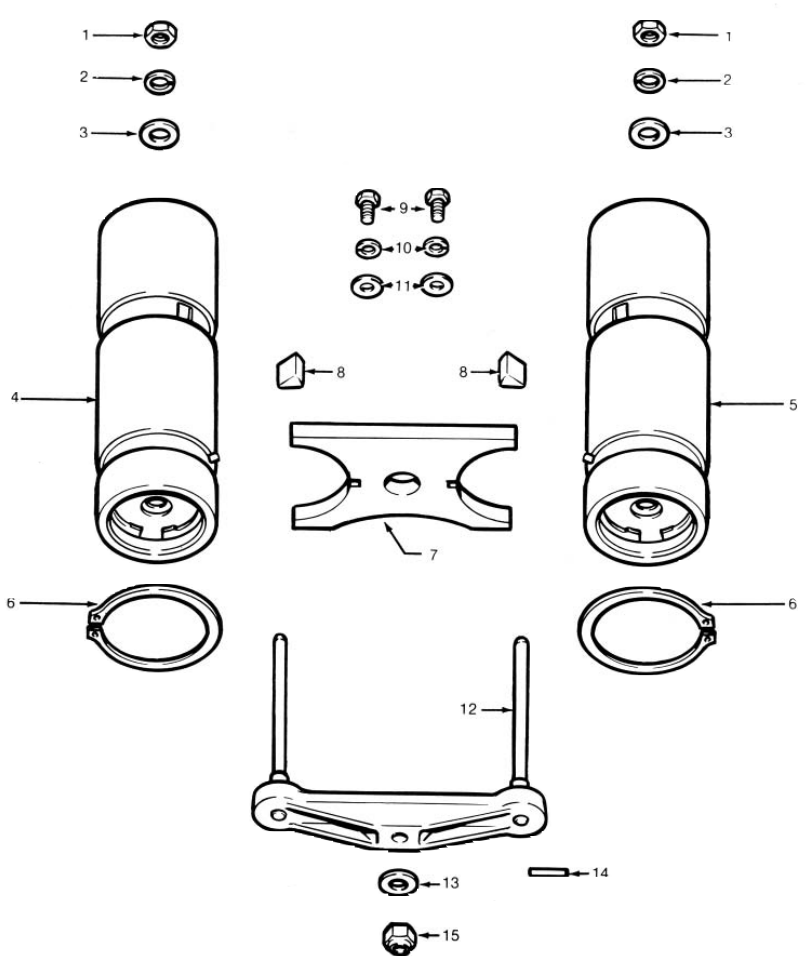

Figure 12.
Arc-interrupting assembly parts. See Table 6 for parts identification.

Table 6
Parts List for Arc-Interrupting Assembly (Figure 12).

Item No.	Catalog No.	Description	No. used
1	K880725324037A	3/8in.-24 brass- jam nut	2
2	K90033003700A	3/8in. bronze lockwasher	2
3	K900525039087A	3/8in. brass- flat washer	2
4	KA170 E1	Stationary contact assembly - - left- hand	1
5	KA170 E2	Stationary contact assembly- - right hand	1
6	KP2013A46	Retaining ring	2
7	KP313 E	Moving contact rod guide	1
8	KP44L	Contact wedge	2
9	K730101125050A	1/4in-20NC2 X 1/2in. steel-hex screw	2
10	K900801025000A	1/4 in. steel lockwasher	2
11	K900201025000A	1 /4in. steel - flat washer	2
12	KA181 E	Moving contact assembly	I
13	K900201043000A	7/16in. steel - flat washer	1
14	K970801125081 C	Roll pin - - 1/8in. X 13/16in.	1
15	KP2020A4	Self- locking nut - - 5/16 in -24UNC2	I

Series-Trip Solenoid Disassembly

If the series-trip coil has been damaged in any way or if the recloser is to be changed to a new rating, the series-trip coil can be replaced. New coils, gaskets, and data plates are shipped in sealed boxes.

Coils should not be exposed to air any longer than necessary because moisture from the air may be absorbed. When a good coil is replaced, it should be stored in the same container in which the new one was shipped.

Observe the following procedure for disassembly of a series-trip solenoid:

1. If the arc-interrupting assembly has not been removed previously, observe procedure outlined in the"Arc-Interrupting Assembly" section.
2. Disconnect coil leads. The long coil lead is disconnected while removing the arc-interrupting assemblies. The short coil lead is disconnected from the solenoid frame by removing the capscrew, flatwasher, lockwasher and hex nut(Figure1 3).
3. Using a 3/4-in. box wrench, remove four hexnuts that secure the solenoid bridge plate. Lift this plate off as shown in Figure 14. Note that a red cushion washer is attached to the plate.
4. Lift off the lower gasket,coil end upper gasket.
5. Remove the hex cap screw that secures the lockwasher, bushing lead, and bypass gap to the frame.

   One solenoid frame shoe will also be released. See Fiqure 15.
6. If necessary to remove the large dielectric shield, first unscrew the solenoid tie bolts from the closing solenoid side of the shield. Then remove the brass machine screws, flat washers, and lockwashers that secure the shield to the solenoid frame (Figure 16). The small dielectric shield is removed by sliding it off the solenoid tie bolt on the contact tube side of the solenoid frame (Figure 16).

Series-Trip Solenoid Reassembly

If further maintenance is to be performed, do not reassemble the solenoid yet. When the solenoid is to be reassembled, observe the following steps:

1. If the small and/or large dielectric shields were removed, reinstall by reversing steps 6 in the"Series-TripSolenoid Disassembly Section."
2. Position solenoid frame shoe. Place a lockwasheron the 3/8- X 1-1/4-in. steel capscrew and secure one bushing lead and the bypass gap to the solenoid frame. This capscrew threads into the solenoid frame shoe.
3. Place a new upper gasket on the flanged end of the trip coil. Reposition the coil and new lower gasket; secure the bridge plate.

4. Secure short coil lead to the solenoid frame by means of the 3/8- X 1-1/2-in. steel hex cap screw, flat-washer, lock-washer and hex nut

6. Replace arc-interrupting structure and long-coil lead as described in the "Arc-Interrupting Assembly" section of this manual.

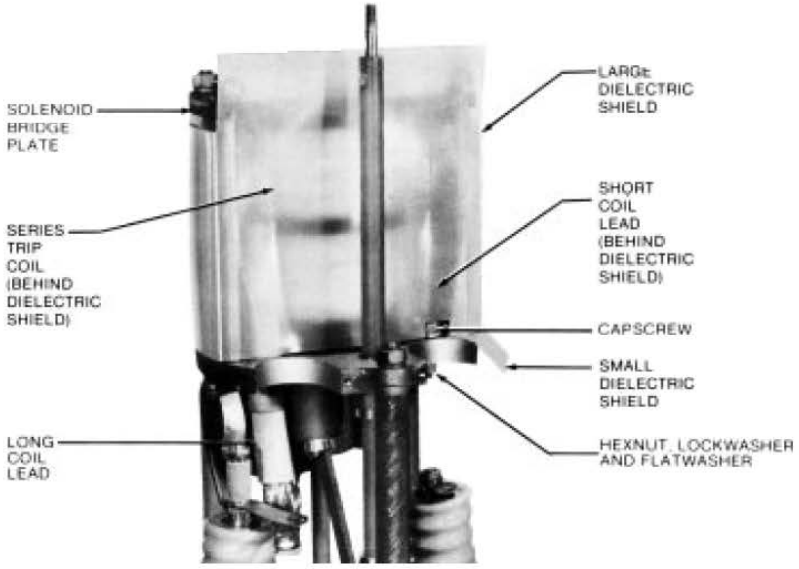

Figure 13.
Series-trip solenoid assembly.

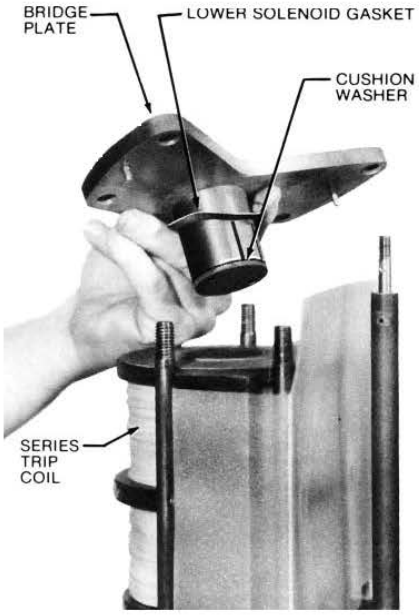

Figure 14.
Bridge plate removal.

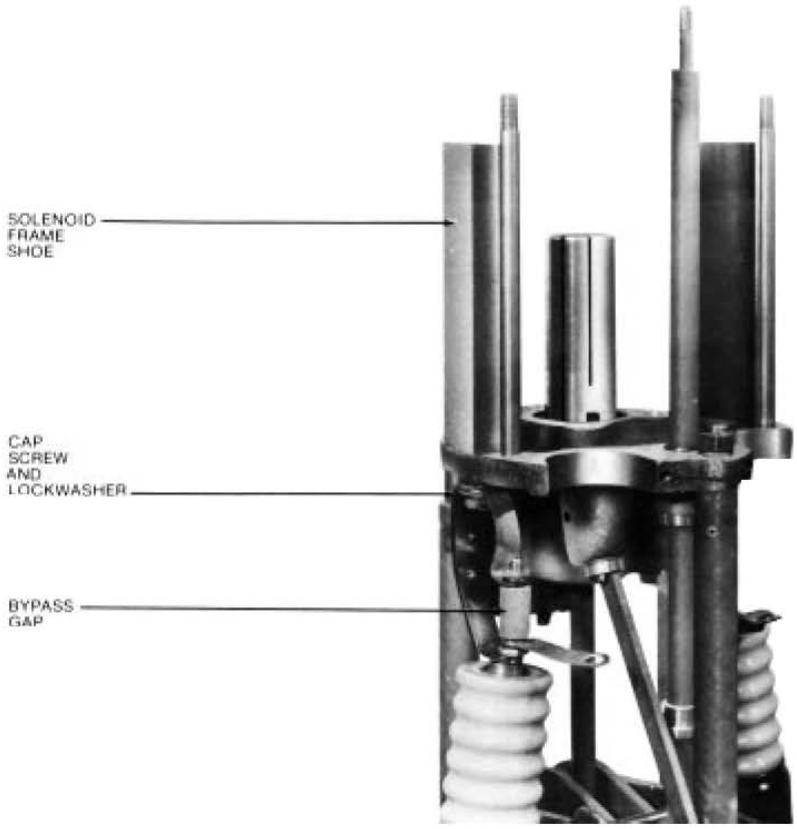

Figure 15.
Releasing bushing lead and bypass gap.

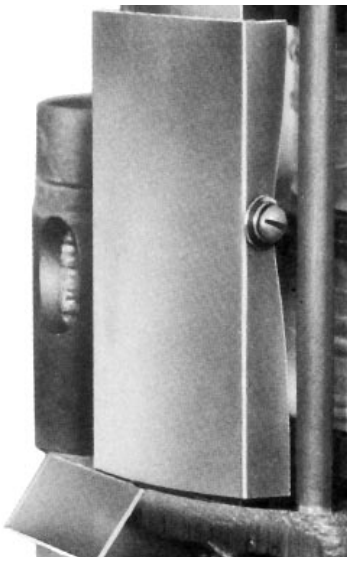

Figure 16.
Removing large dielectric shield.

Table 7
Parts List for Series-Trip Assembly (Figure 17)

Item No.	Catalog No.	Description	No. Used
1	KA60L-1	Coil bypass gap assembly	1
2	K73010113712SY	Steel hex cap screw - 3/8in. - 16NC2 X 1-1/4 in.	1
3	K900801037000Y	Steel Kantlink lockwasher - 3/8in. X 0.141 in. X 094in.	2
4	K730101137150A	Steel hexcapscrew-3/8in.- 16NC2 X1-1/2in.	1
5	K900830037000A	Bronze lockwasher, 3/8in.	2
6	K880201116037A	Steel hex nut- 3/8in.- 16NC2	1
7	KP2090A6	Solenoid gasket, upper	1
8	KA67L	Coil Assembly (Show coil rating by suffix Example: KA67L100 = 100-amp coil)	1
9	KP2090A28	Solenoid gasket, lower	1
10	KA85L	Plunger stop assembly	1
11	KP10L	Bridge Plate	1
12	KP3017A49	Sleeve, long coil lead (outer)	1
13	KP2104A4	Sleeve, long coil (inner)	1
14	KP3106	Large dielectric shield	1
15	K721525125050A	1/4in.-20X1/2in.brass machine screw	2
16	K900830025000A	1/4in. bronze lockwasher	2
17	K900525026068A	1/4in. brass flat washer	2
18	KP312E1	Small dielectric shield	1

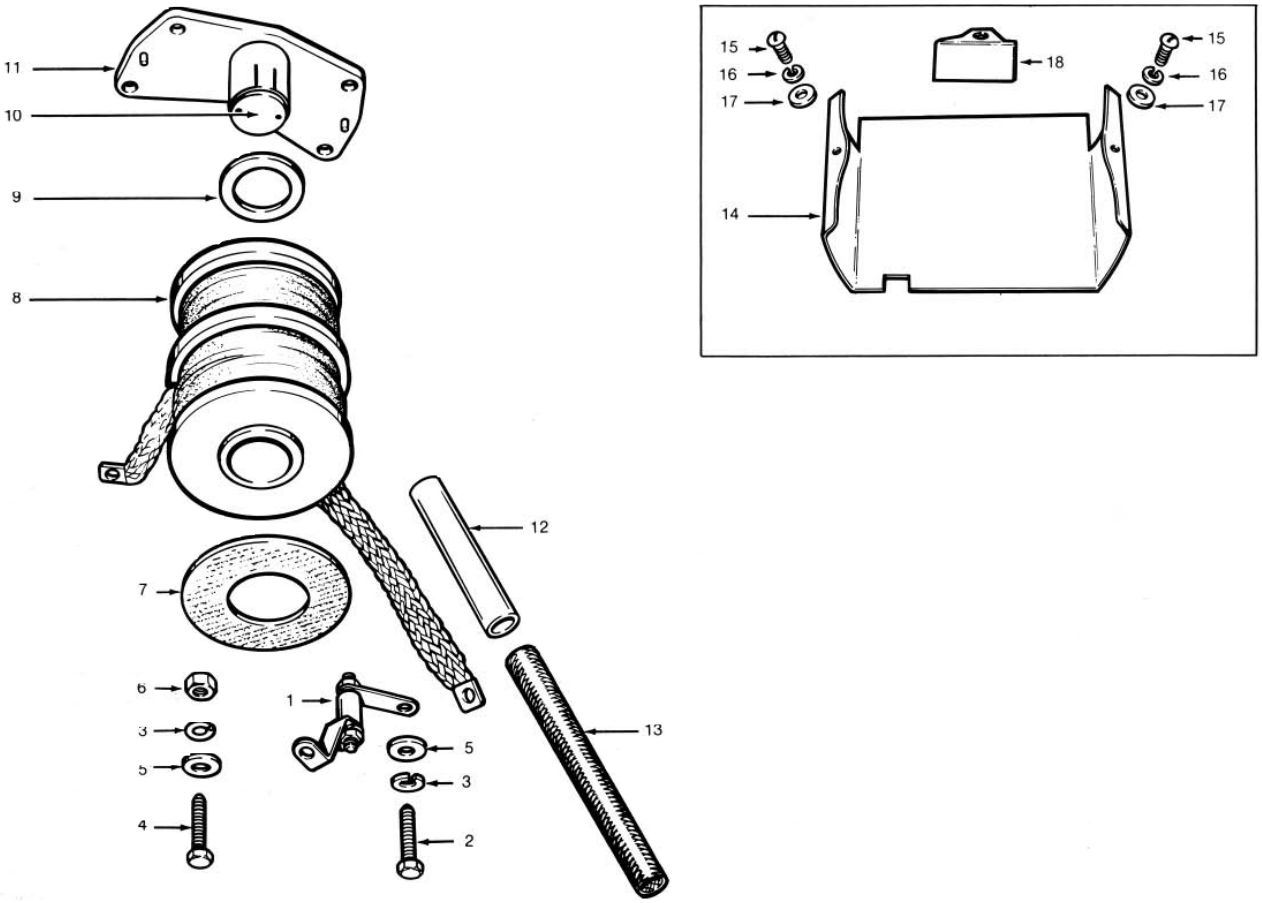

Figure 17.
Parts for series-trip solenoid assembly. See Table 7 for parts identification.

Hydraulic Mechanism

This mechanism should require no maintenance, but components may be changed to provide different operation sequences. Furthermore, removal of this mechanism may be required to gain access to the head operating mechanism.

Observe the following steps:

1. Remove hexnut, lockwasher and flatwasher from the frame shoe at the hydraulic frame and then remove tie bolts (Figure 18).
2. Grasp the solenoid plunger and pump piston link with one hand and carefully lift off the frame with the other hand as illustrated in Figure 19.
3. With a 1/2-in. wrench, remove the capscrew that secures the operation selector plate, orifice plate, and gasket. See Figure 20.

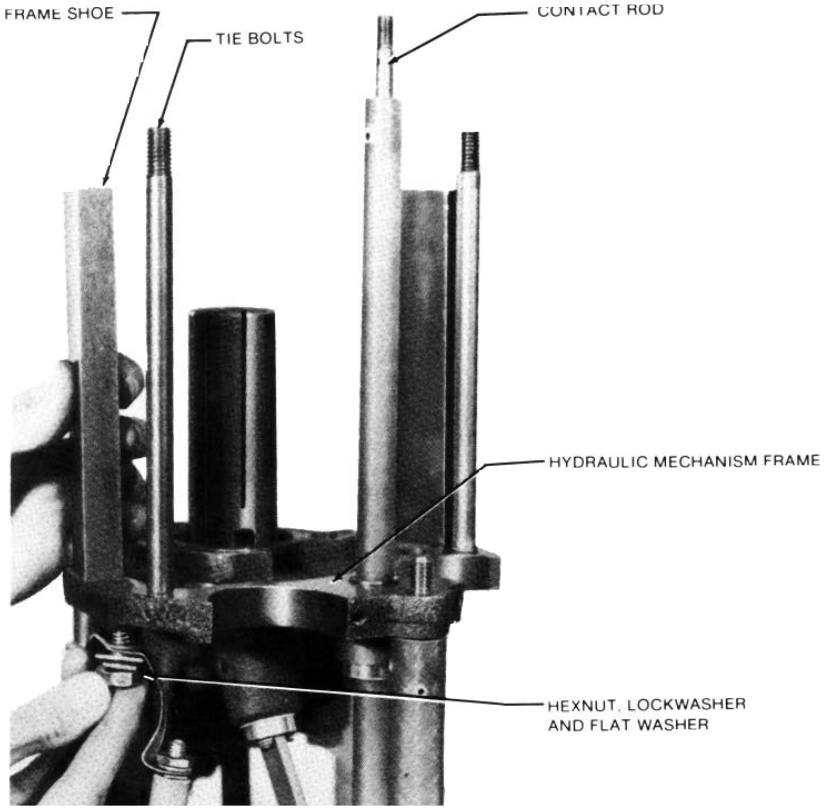

Figure 18.
Dismantling hydraulic mechanism.

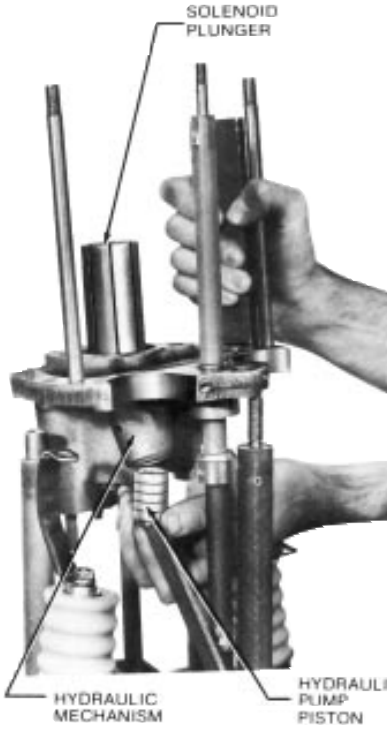

Figure 19.
Removing hydraulic mechanism.

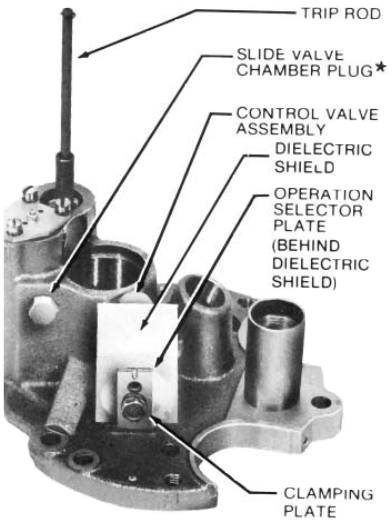

Figure 20.
View of hydraulic mechanism.
***Used only on solenoid frame assembly KA179E3**

4. Using a 5/8-in. wrench, remove the control valve assembly. Tip the frame so the valve element falls out.
5. Remove the slide valve chamber plug and gasket by means of a 5/8-in. wrench. Parts removed in steps 3, 4 and 5 are shown in Figure 21.
6. Remove the slide valve plate and gasket by releasing three screws. Tip the frame so the valve will slide out.
7. With a wire hook, pull the ball check valve seat out enough to expose the spring and insert a thin plate as demonstrated in Figure 22. Then push the pin out to release the spring. A steel ball will be released. Lift out the trip piston. Figure 23 shows parts removed in Steps 6 and 7.

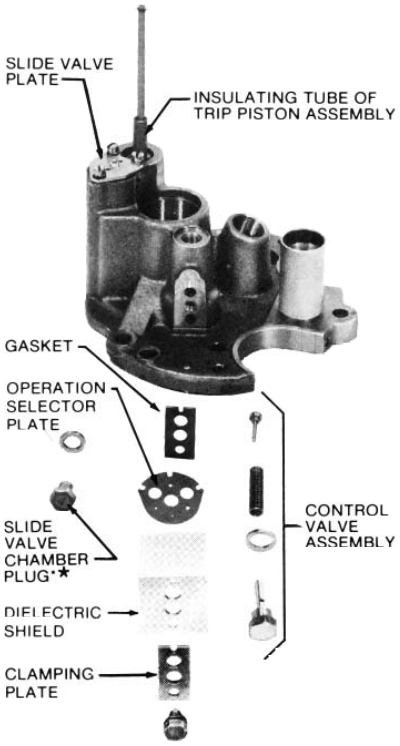

Figure 21.
Hydraulic mechanism partially assembled.
***Used only on solenoid frame assembliy KA179E3.**

8. The pump piston can be removed if necessary by turning the outer shell off the piston body. Then push out the pin that connects the body to the insulated link. See Figure 24.

If further maintenance is to be performed, do not replace the hydraulic mechanism yet When ready for reassembly, observe the following steps:

1. Refer to Table 9 for components to be used for a particular operating sequence.
2. Insert the trip piston in its cylinder. Pull the spring out as shown in Figure 25 and insert a thin plate to hold it. Secure the ball and check valve seat to the spring by inserting the pin, but be sure the small steel ball is also retained by the pin.

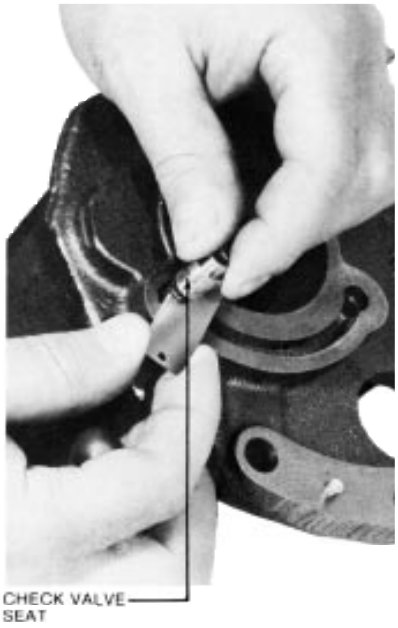

Figure 22.
Removing check valve seat.

3. Replace the slide valve, slide-valve spring, and slide-valve plate and gasket assembly. Next, replace the slide-valve chamber plug and the operation selector assembly. Use a new gasket KA2011 A1 with the slide valve chamber plug.
4. Pin the pump piston body to the insulated link and screw on the outershell. When sequence adjustments have been made (Page 14), stake the shell to the body by means of a small prick punch.

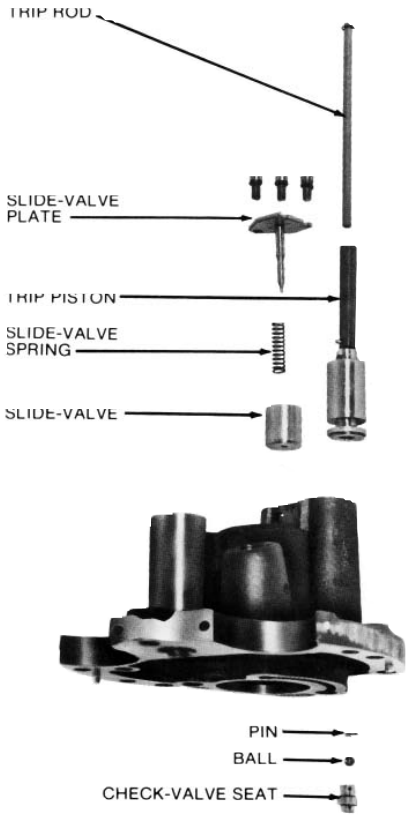

Figure 23.
Removing slide valve, check valve and trip valve.

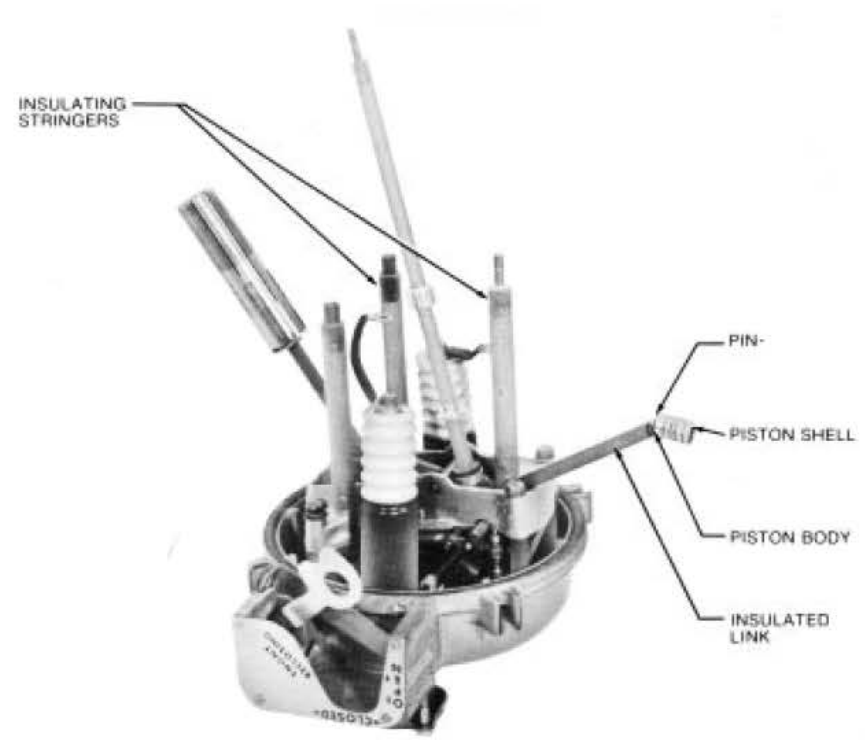

Figure 24.
Removing stringers and pump piston.

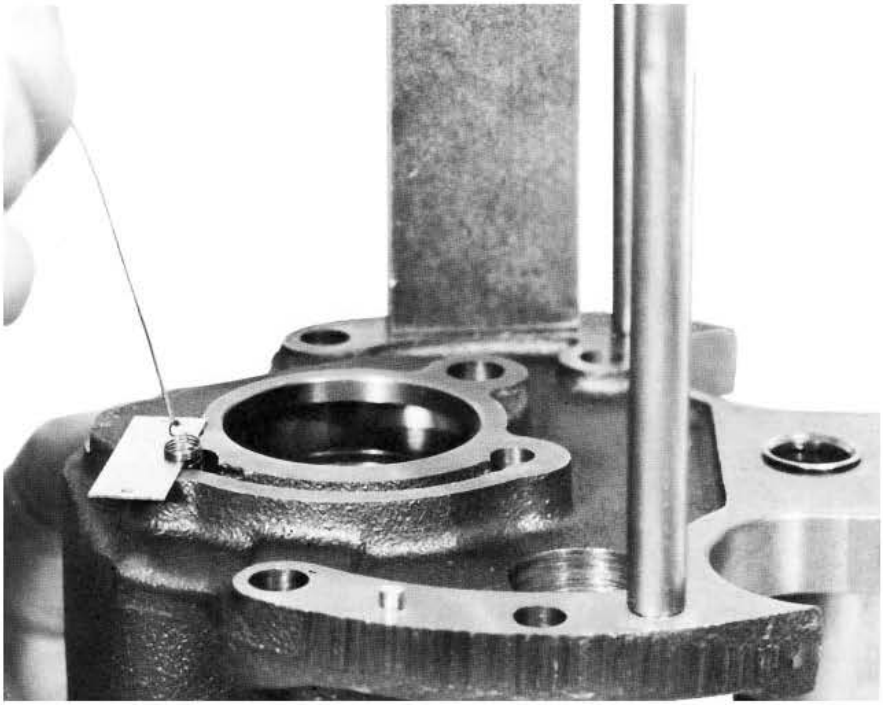

Figure 25.
Pulling out trip piston spring.

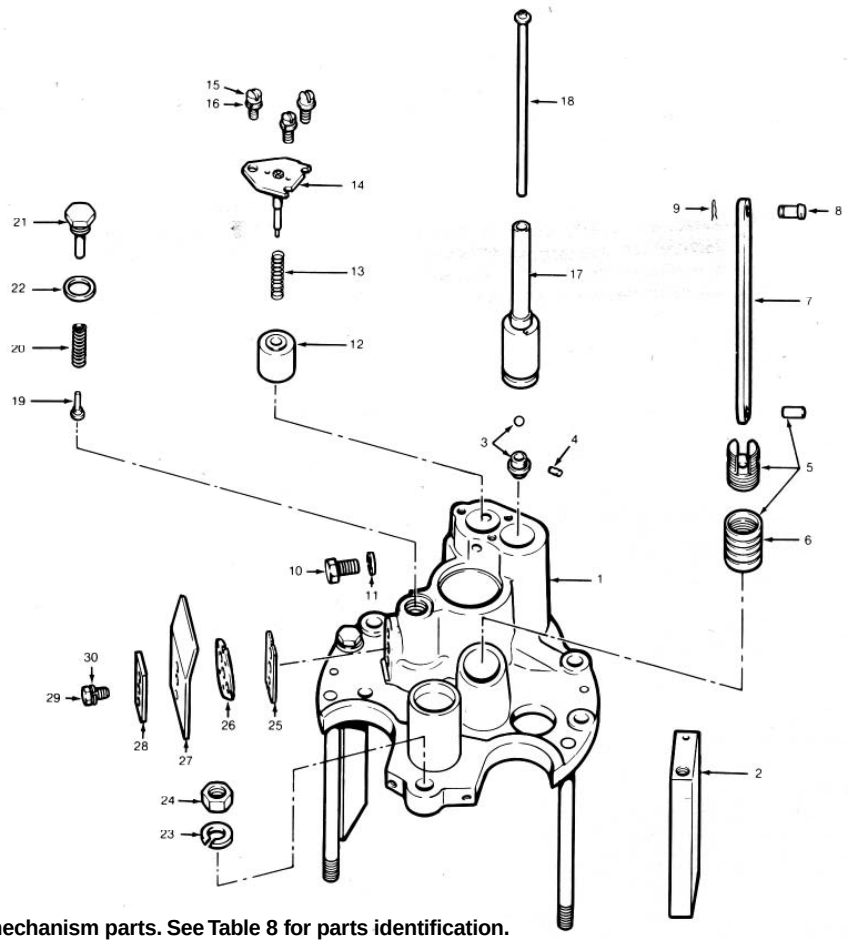

Figure 26.
Hydraulic mechanism parts. See Table 8 for parts identification.

Table 8
Parts List for Hydraulic Mechanism (see Figure 26)

Item No.	Catalog No.	Description	No. used
1	KA179E I	Solenoid frame assembly	1
2	KP311E2	Frame shoe	2
3	KP155H	Ball check valve seat and 1 /4-in.-steel ball	1
4	KP3051A3	Pin	1
5	KA2S H	Pump piston assembly	1
6	KP151 H	Pump piston shell only	1
7	KP112 L	Pump piston link	1
8	KP85L	Pivot pin- includes item 9	1
9	KP2018A2	Spring clip No.1137 0.035in.	1
10	KP119 L	Slide valve chamber plug C*	1
11	KA2011 A1	Type A gasket- 1/2- X 11/1 6- X5/64in.	1
12	KP104 L	Slide valve } See Tables 9 and 10	1
	KA155 L	Slide valve }	1
13	KP213 L	Slide valve spring	1
14	KA64 L	Slide valve stop assembly	2
15	K721801125050A	Steel round-head screw- 1/4 in. - 20 NC2 X 1/2in.	3
16	K900801037000M	Lockwasher - 1/4 in.	3
17	KA94L1	Piston and rod guide assembly } See Table 9	
	KA94L2	Piston and rod guide assembly }	
	KA94L3	Piston and rod guide assembly }	
	KA94 L4	Piston and rod guide assembly }	
18	KP108L900	Trip rod } See Table 9	1
	KP197L900	Trip rod }	
19	KP193L	Control valve	1

Table 8 continued on page 13.

Table 8. (continued)

20	KP113L	Control valve spring	1
21	KP118L	Control valve stop screw	1
22	KP3013A12	Steel lockwasher- 1/2 in. X 0.170 in. X .099 in.	1
23	K900801043000A	Steel lockwasher - 7/16 in. X 0.156 in. X 0.109 in.	1
24	K880201114043A	Hexhead steel nut- 7/16 in. - 14NC2	1
25	KP222L	Operations selector gasket	1
26	KP123L	Plate selector. standard	1
27	KP315E	Dielectric shield	1
28	KP223L	Plate. clamping	1
29	K730101131050A	Steel hex cap screw - 5/16 in. - 18NC2 X 1/2 in.	1
30	K900801031000D	Lockwasher- 5/16in X 0.125in. X 0.78in	1

*Used only on solenoid frame assembly KA179E3

Table 9.
Part Numbers Used for Various Operating Sequences (above serial no. 52000)

Curve.	Timing	Trip Plston	Trip Rod	Slide Valve	Sprlng, Slide Valve	Stop Slide Valve	Spacer
	3 delayed	KA94L-1	KP108L900	KP104L	KP213L	KA64L	KP332H
A	4 delayed	*	*	*	*	*	* *
B	4 delayed***	*	*	KA155L	*	KPl105L& KP106L	**
B	3 delayed* * *	*	*	*	*	*	KP233L
B	2 delayed	*	*	KP104L	*	KA64L	KP332H
B	3 fast, 1 delayed	KA94L-3	*	*	*	*	**
B	2 fast, 2 delayed	KA94L-1	*	*	*	*	**
B	2 fast, 1 delayed	KA94L-4	*	*	*	*	**
B	1 fast, 3 delayed	KA94L-2	KP197L900	*	*	*	**
B	1 fast, 2 delayed	KA94L-1	KP108L900	*	*	*	KP233L
B	1 fast, 1 delayed	KA94L-4	*	*	*	*	*
C	4 delayed***	KA94L-1	*	KAl155L	*	KP105L & KP106L	**
C	3 delayed* * *	*	*	*	*	*	KP233L
C	2 delayed	*	*	KP104L	*	KA64L	KP332H
C	2 fast, 2 delayed	*	*	*	*	*	* *
C	2 fast, 1 delayed	KA94L-4	*	*	*	*	**
C	1 fast, 3 delayed	KA94L-2	KP197L900	*	*	*	**
C	1 fast, 2 delayed	KA94L-1	KP1108L900	*	*	*	KP233L
C	1 fast, 1 delayed	KA94L-4	*	*	*	*	*
D	4 delayed***	KA94L-1	*	KA155L	*	KP105L & KP106L	**
D	3 delayed* * *	*	*	*	*	*	KP233L
D	2 delayed	*	*	KP104L	*	KA64L	KP332H
D	2 fast, 2 delayed	*	*	KP104L	*	*	**
D	2 fast, 1 delayed	KA94L4	*	*	*	*	**
D	1 fast, 3 delayed	KA94L-2	KP197L900	*	*	*	**
D	1 fast, 2 delayed	KA94L-1	KP108L900	*	*	*	KP233L
D	1 fast, 1 delayed	KA94L-4	*	*	*	*	*
E	2 fast, 2 delayed”	KA94L-1	*	*	KP194L	*	**
E	1 fast. 3 delayed”	KA94L-2	*	*	*	*	**
E	1 fast, 2 delayed”	KA94L-1	*	*	*	*	*
F	3 fast 1 delayedit	KA94L-3	*	*	KP213L	*	**
F	2 fast 2 delayed	KA94L-1	*	*	*	*	**
F	2 fast, 1 delayed	KA94L-4	*	*	*	*	**
F	1 fast, 3 delayed	KA94L-2	KP197L900	*	*	*	**
F	1 fast, 2 delayed	KA94L-1	KP108L900	*	*	*	KP233L

*Same catalog no. as above
**Not used in this sequence.
***Slide-valve spring omitted. All others use KP213L slide-valve spring.
†Uses KP226L control valve plate. All others use KP123L.
††Uses KA123L control valve plate. All others have none.
Note: In order to have all fast-trip operations, a solenoid frame assembly must be ordered.

Changing Time-Current Settings

Time-current curves for the Type E recloser indicate minimum-trip and the interrupting capacity range plotted to an average clearing time for each opening of the recloser contacts. Recloser curves are labeled to represent their relative speed of opening with A being fast, B delayed, C extra delayed, D steep delayed, E an intermediate delayed, and F a slightly less delayed curve than B curve. To provide all operations on the A curve, a special solenoid frame assembly must be ordered (KA179E3). To select operations on the B, C, or D curves, merely loosen the capscrew and clamping plate and reindex the orifice selector plate to the desired delayed curve. For all operations on the E curve, the KP123L selector plate is removed and a KP226L plate is inserted and indexed in its place. F curve operation requires the removal of the fast shot blocking plug KP119L (on units with special solenoid frame assembly KA179E3) and the addition of a KA123L control valve. Selector plate setting for this F curve is indexed at B.

Changing Operating Sequence

Specified combinations of hydraulic parts as in Table 9 permit the recloser to operate along one curve(single timing) or with a combination of two curves (dual timing). When set for dual timing, the recloser operates first on a fast curve and then on a slower curve. After a selected number of operations, the recloser locks out Figures 27 to 30 illustrate the location of the various parts used for changing the operating sequence to lockout.

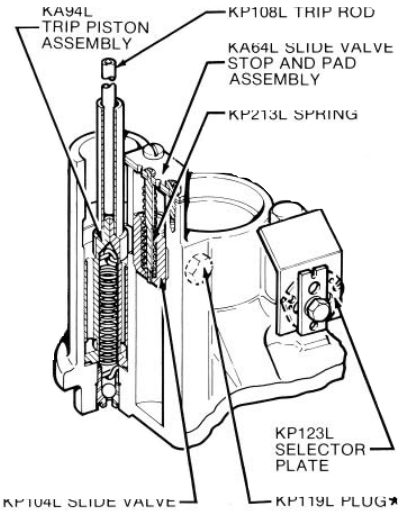

Figure 27.
Parts for most commonly used sequence, two fast and two delayed.
***Only on units with solenoid frame KA179E3.**

Sequence Adjustments

After any change or servicing of the hydraulic mechanism, make sure to remove any air that may have been entrapped, by operating the yellow control handle manually seven or eight times. All changes should also be verified with the testing procedures that are explained in the "Periodic Inspection and Maintenance" section. It may also be necessary to adjust the hydraulic pump piston shell to enable pumping action to lockout in the following manner.

1. Lower the unit into the oil enough to cover the hydraulic system. Operate the recloser manually several times to dispel any air in the hydraulic system.
2. Close the recloser, wait 4 minutes, and rapidly trip and close there closer three times. Then observe the position of the trip rod. This rod should just be touching the adjustable lockout level in the head mechanism.
3. If the trip rod is not correctly positioned, turn the pump piston shell to cause it to pump more or less oil as required. Turning the shell off the body tends to increase travel of the trip rod, whereas turning the shell into the body decreases trip-rod travel.

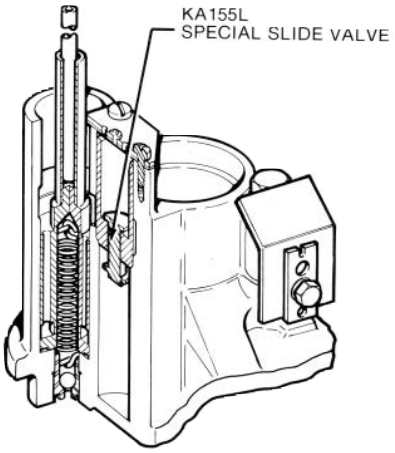

Figure 28.
Installation of special slide valve used for delayed-only operations. No slide-valve spring is used.

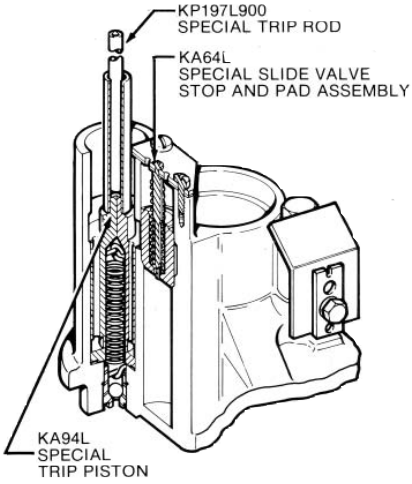

Figure 29.
Special parts used for one fast and three delayed sequence.

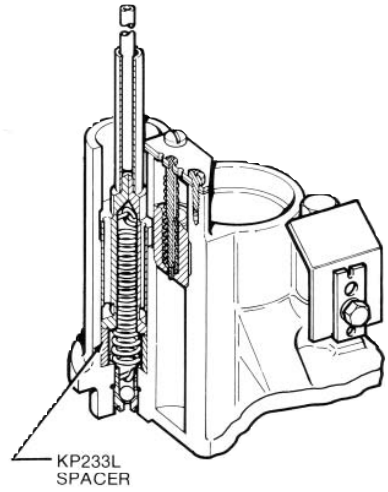

Figure 30.
Location of spacer under trip piston.

Bushings

Maintenance of bushings is ordinarily limited to an occasional cleaning. If, however, a bushing is cracked or chipped, replace as follows:

NOTE: The recloser must be untanked to replace the bushings.

DISASSEMBLY

1. If not done previously, remove the lead straps from bottom of each bushing by removing nut, lockwasher, and flatwasher.
2. Remove the three bolts that secure the bushing clamps and lift the bushings out of the head casting (Figure 31).

If further maintenance is to be performed, do not replace the bushings yet.

REASSEMBLY

1. Position the new bushing gaskets on the head mechanism.
2. Place the bushing clamping gaskets around the bushings.
3. Carefully insert bushings into head casting so that the flat part of the lower terminal faces away from the center of the recloser mechanism.
4. Replace the bushing clamps and bolt into place.
5. Secure the lead straps to the bushings by reinstalling the flatwasher, lockwasher and nut.

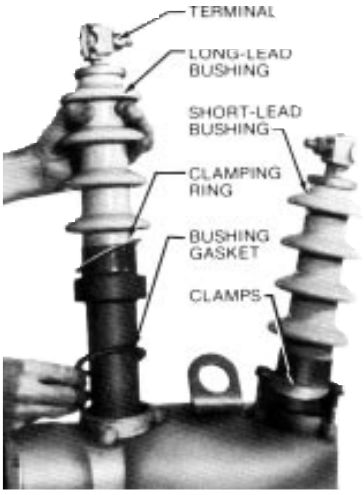

Figure 31.
Lifting a bushing assembly.

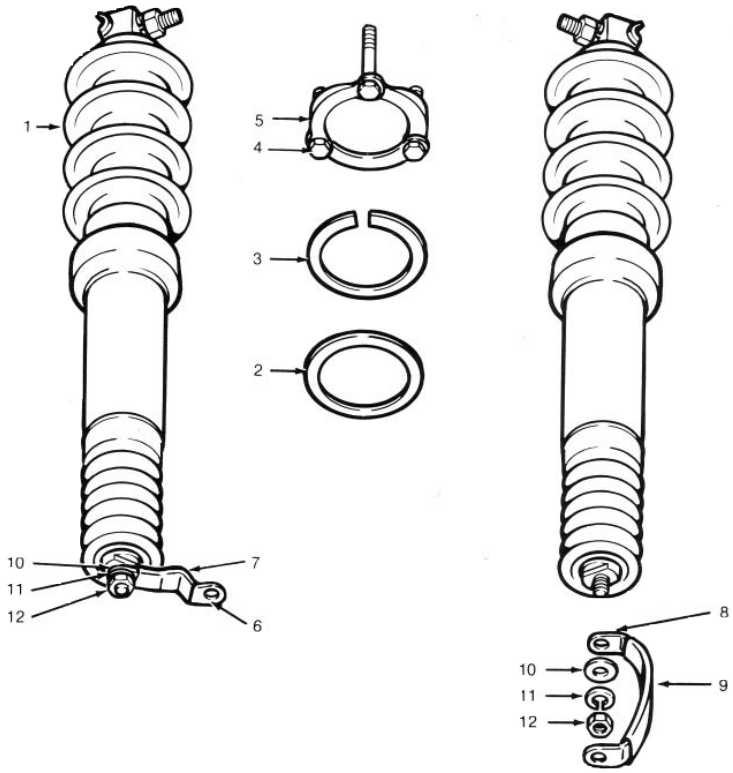

Figure 32.
Bushing parts. See Table 10 for parts identification.

Table 10.
Parts List for Bushings (see Figure 32)

Item No.	Catalog No.	Description	No. used
1	KA160E23	Bushing assembly	2
2	KP2090A29	Bushing gasket, lower	2
3	KP121 L	Bushing clamping gasket	2
4	K730115137200A	Stainless steel hex cap screw - 3/8 in. - 16 NC2 X 2in.	6
5	KP41 L	Galvanized bushing clamp segment	6
6	KP3251A20	Bushing lead	1
7	KP2106A33	Tubing	1
8	KP3256A1	Bushing lead	1
9	KP2106A75	Tubing	1
10	K900525039087A	3/8 in. brass flatwasher	2
11	K900830037000A	3/8 in. bronze lockwasher	2
12	K880725321 037A	3/8 in. - 24UNF - 2 B brass hex nut	2

Head Mechanism

Disassembly of the head mechanism should rarely be required. Should this be necessary for any reason, follow these steps:

1. Move operating lever to the OPEN position.
2. Figure 33 shows a head assembly as it appears after the arc-interrupting structure, series-trip solenoid, hydraulic mechanism, insulating stringers and bushings have been removed. Remove self-locking nut and four hexcap screws indicated in Figure 33. Note use of flat washer under cap screw nearest the operating lever. Also note that two pipe spacers will be released.
3. Lift the operating mechanism assembly to expose the pivot point. Remove the C ring and pull out the pin. Lift out the entire mechanism.
4. Remove C ring (Figure34) and pull pin that secures the solenoid plunger to the operating mechanism. Then pull off spring clip and remove pin that secures the contact rod. The trip rod is removed by removing the E-ring on the head casting side of the rod (Figure 20).
5. Figure 35 shows the head assembly as it appears afterthe operating mechanism has been removed. Unhook lockout spring and operating lever spring.
6. Remove sleet hood cover and counter. Then drive out a pin (not shown) in the lockout lever.

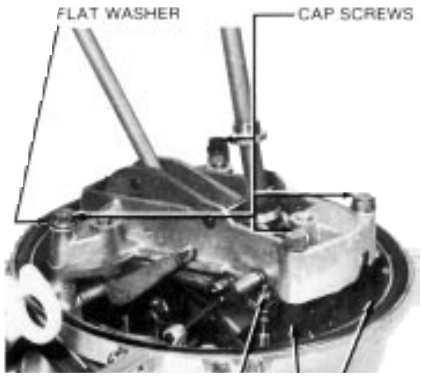

Figure 33.
Head operating mechanism.

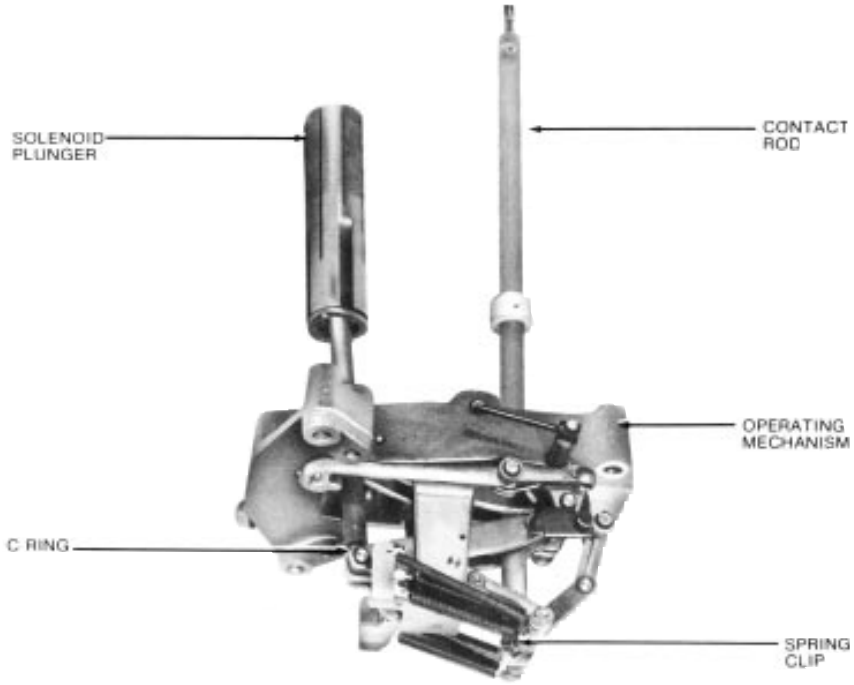

Figure 34.
Releasing plunger and contact rod.

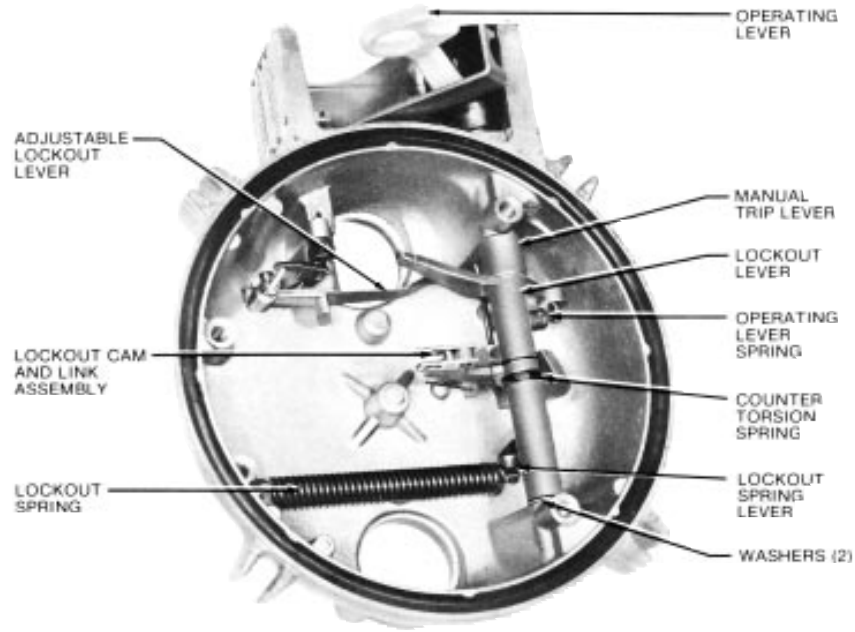

Figure 35.
View of head mechanism.

7. Pull the operating lever and remove manual trip lever. Then lift out the lockout cam and link assembly, and lockout lever. See Figure 36.

8. Drive out the rollpin that secures the counter lever assembly to the counter shaft as illustrated in Figure 37. Pullout the shaft Note the flat washer that separates the counter lever assembly and a post in the head casting.

9. Slip off the adjustable lockout lever (Figure 38).

All major components have been removed at this point, with the exception of the non-reclosing accessory. Description of removal of this device is omitted because such procedure should never be necessary.

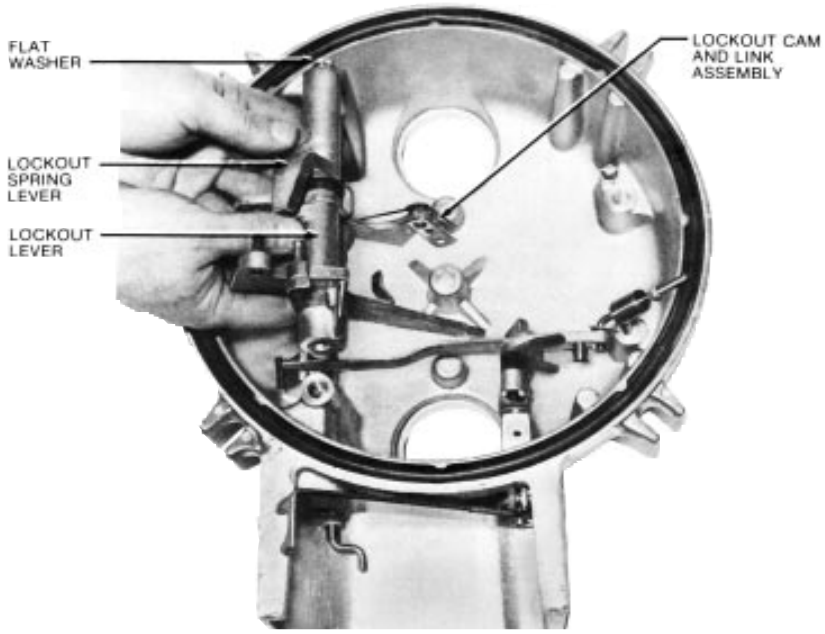

Figure 26.
Head mechanism parts being removed.

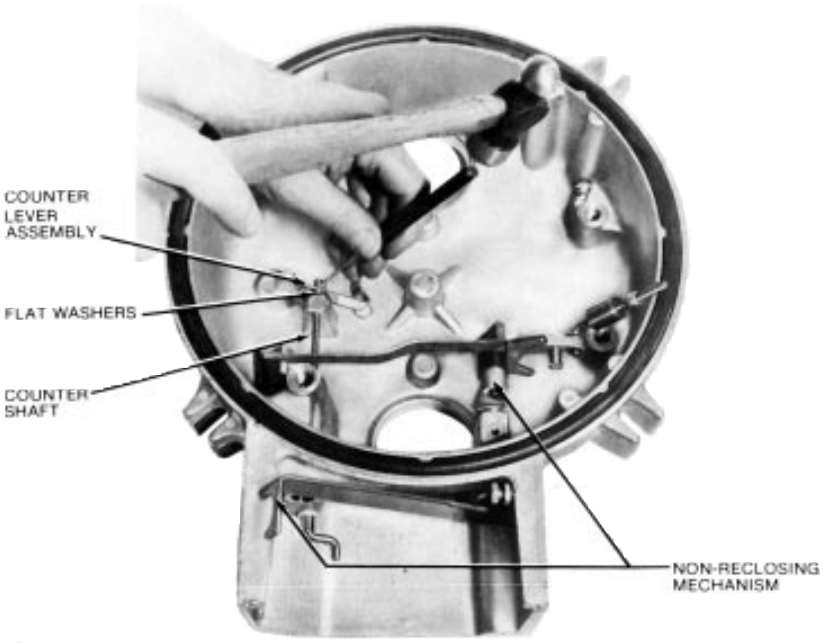

Figure 37.
Driving out pins in counter shaft.

Reassembly of the head mechanism can in general be accomplished by reversing the foregoing procedure. Some helpful precautions are noted below.

1. Install counter parts first.
2. Next, position adjustable lockout lever (Figure 38).
3. Slide lockout spring lever, counter spring, lockout cam and link assembly, and lockout lever onto their shaft. Note that the hollow shaft end must point toward the sleet hood. Position this assembly. Be sure to include the flat-washer on the end of the shaft. See Figure 39.
4. Now position the manual trip lever and insert the operating lever. Pin the lockout lever to the operating lever.
5. Connect the solenoid plunger and contact rod to the operating mechanism. Bolt the operating mechanism in the position shown in Figure 33.

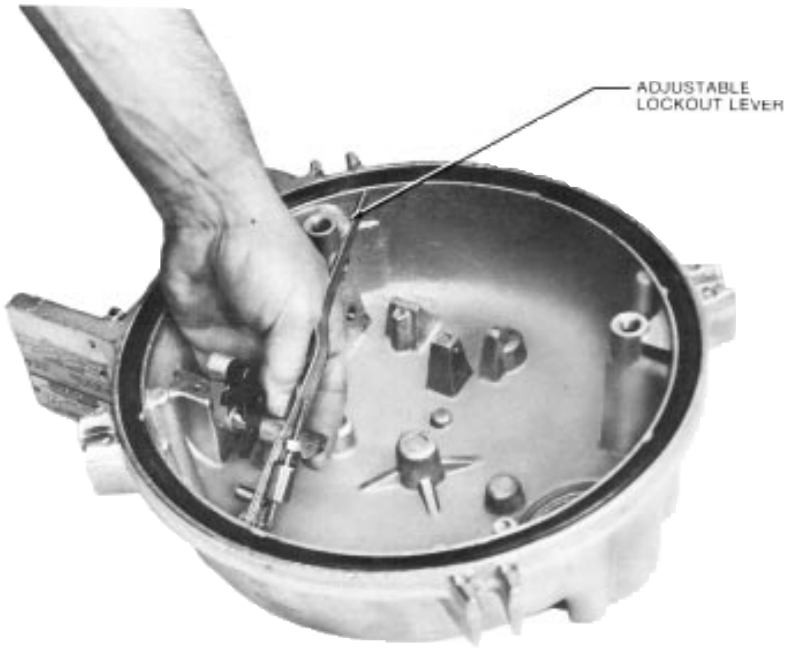

Figure 38.
Lifting out adjustable trip lever.

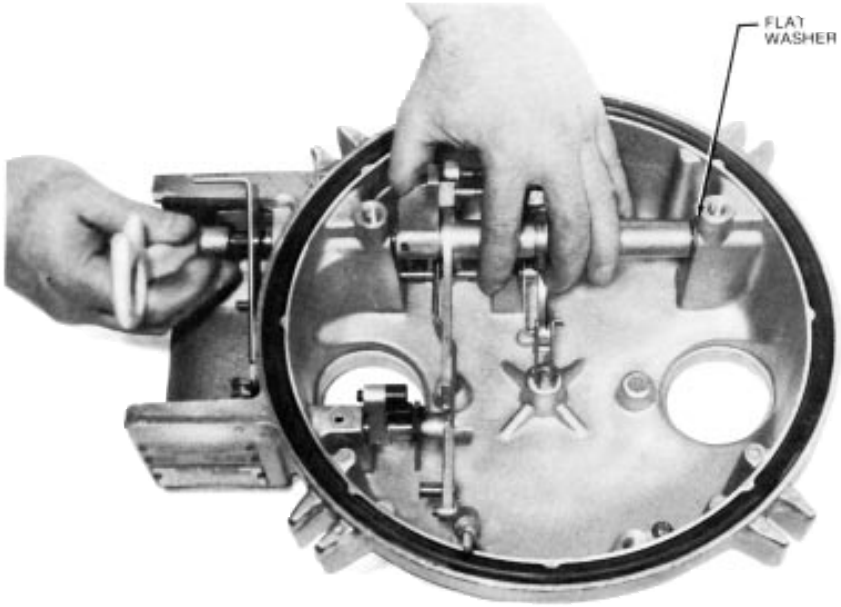

Figure 39.
Reassembling head mechanism.

6. Connect adjustable lockout lever to the operating mechanism by replacing the self-locking nut removed in the “Head Mechanism” section, Step 2.

7. Check adjustment of the lockout mechanism as follows:

A. Grasp the insulating tube portion of the trip piston assembly (Figure23), and lift it until the trip piston contacts the slide valve stop. Make a light scribe mark on the insulating tube 1/4 in. above the slide valve stop.

B. Release the trip piston tube and move the operating lever to the CLOSED position.

C. Hold the operating lever with one hand to prevent the recloser from opening out of oil. Then slowly raise the insulating tube of the trip piston assembly. Recloser should trip just as the light mark made in step A moves even with the top of the slide valve stop.

D. If tripping does not occur as described in Step C, adjust self-locking nuts shown in Figure 40 to achieve correct operation. Note that the mechanism cannot operate properly if the nuts are tight against the operating mechanism lever. Always back off either nut one-half turn before testing.

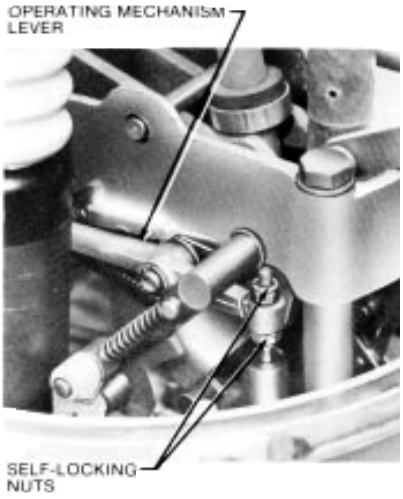

Figure 40.
Adjustable lockout lever setting.

Figure 41.
Parts for tank and iner. See Table 11 for parts identification.

Table 11
Parts List for Tank and Liner (see Figure 41)

Item No.	Catalog No.	Description	No. used
1	KA145L2	Tank assembly	1
2	KP277E	Tankwall insulation	1
3	KP191L	Liner	1
4	K730101150350Q	Electro zinc-plated steel hex cap screw- 1/2in.-13NC2 X3-1/4in.	4
5	KP2028A23	Galvanized steel washer- 17/32- X 1-1/8-in. X1/8in.	4
6	KP86 L	Galvanized combination steel nut and pin	4
7	KA227H	Ground clamp	2

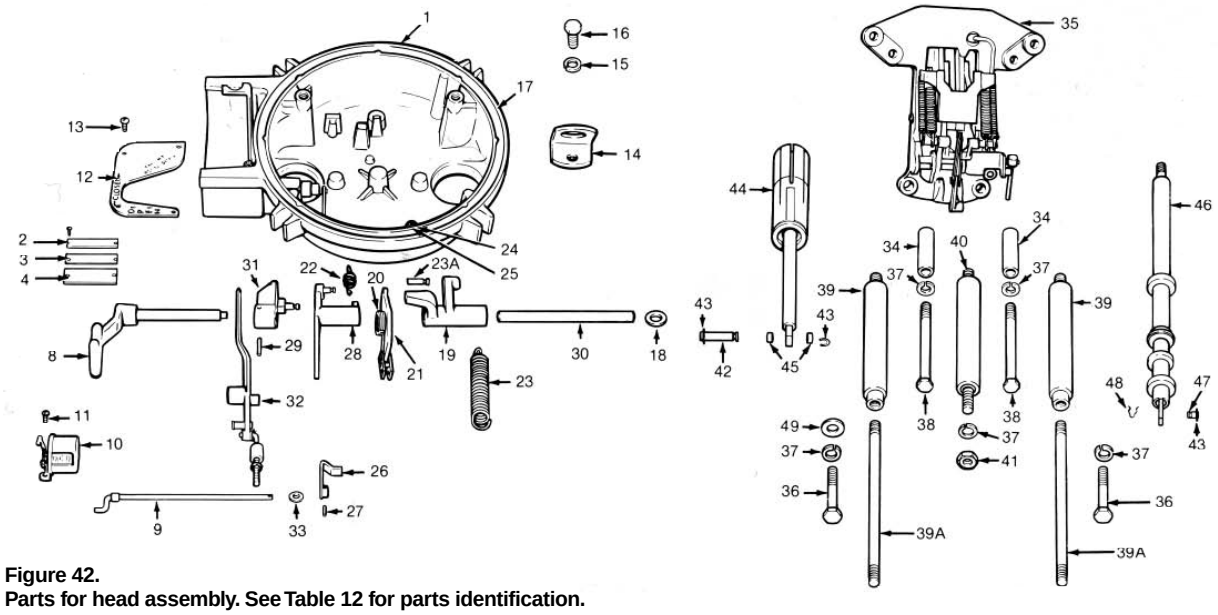

Figure 42.
Parts for head assembly. See Table 12 for parts identification.

Table 12
Parts List for Head Assembly (Figure 42)

Item No.	Catalog No.	Description	No. used	Item No.	Catalog No.	Description	No. used
1	KP344L-2	Head Casting	1	27	KP2001 A2	Stainless steel groove pin - 3/32 in. X 1/2 in., Type 2	1
2	KP282E900	Name plate and mounting screws	1	28	KA17L	Lockout lever assembly	1
3	KP2119A13	Coil data plate, add continuous rating and screws	1	29	KP2001 A13	Stainless steel groove pin -1/8 in.X1-1/4 in.,Type1	1
4	KP1371R	Operating data plate, add sequence and screws	1	30	KP77L	Operating shaft	1
5	KP3106A12	Bushing in cover, counter shaft*	1	31	KA5L	Manual trip lever assembly, part of item 8 (KA92L)	1
6	KP269L	Bushing in cover, operating handle*	1	32	KA72 L	Trip lever assembly	1
7	K970901500000	Open-type retaining ring*	1	33	KP3006A7	Spacer, counter shaft	1
8	KA92L	Operating lever, includes shaft assembly (KA5L)	1	34	KP33 L	Operating mechanism frame spacer	2
9	KP258 L	Counter shaft assembly	1	35	KA37L	Operating mechanism assembly	1
10	KA28C0IS	Counter kit	1	36	K730101143250A	Steel hex cap screw -7/16 in.-14NC2X2-1/2 in.	2
11	K751501106062A	Round-head self-tapping screw No.4 X5/16in.	2	37	K900801043000A	Steel lockwasher - 7/16 in. - X 0.156in. X 0.109 in.	5
12	KP292 L	Sleet hood cover plate	1	38	K730101143550A	Steel hex cap screw -7/16 in.-14NC2X5-1/2 in.	2
13	K781515112050A	Steel round-head phillips self-tapping screw— No.12 X1/2in.	4	39	KA10L	Insulating stringer, long	2
14	KP764 H	Lifting lug replacement kit	1	39A	KP3149A33	Solenoid tie bolt	2
15	K900801050000Z	Lockwasher	1	40	KA122 L	Insulating stringer, short	1
16	K730101150100C	Standard hex capscrew 1/2in.- 13UNC2 X1 in.	1	41	K880201114043A	Steel hex nut - 7/16 in. - 14 NC2	5
17	KP2103-A4	O-ring head gasket	1	42	KP3125A4	Pivot pin	2
18	K900101051087C	Flat washer- zinc plated	1	43	K970901312000M	Retaining Ring	5
19	KP14L	Lockout spring lever	1	44	KA28L	Solenoid plunger assembly	1
20	KP158L	Counter torsion spring	1	45	KP3007A162	Spacer	2
21	KA27L	Lockout cam and link assembly	1	46	KA1 78 E	Contact rod assembly	1
22	KP27H	operating lever spring	1	47	KP3125A1	Pivot pin	1
23	KP99L	Lockout spring	1	48	KP2018A1	Spring clip, no.1090 narrow, 0.041 dia. wire	1
23A	KP73L	Lockout spring anchor pin	1	49	K900201043000A	Standard light steel flat washer 7/16 in. X59/64 in. X 0.080 in. (see Figure 35)*	1
24	K721501125062C	Zinc plated round head screw -1/4in.-2OUNCA2AX5/8in.	1				
25	K881001120025C	Zinc plated hexnut-1/4in.-2OUNC2B	1				
26	KA118L	Counter lever assembly	1				

*not shown

COOPER
Cooper Power Systems
Quality from Cooper Industries

©1990 Cooper Power Systems, Inc.
Kyle® is a registered trademark of Cooper Industries, Inc.

PO Box 2850, Pittsburgh, PA 15230

SERVICE DATA
OIL CIRCUIT RECLOSERS • SINGLE-PHASE
2.4 thru 14.4 kv • 25 thru 280 amperes continuous • Type L
4000 amperes interrupting rating at 14.4 kv

280-25SB-1
Page 1
October, 1963

MAINTENANCE MANUAL

L-M type L OIL CIRCUIT RECLOSER

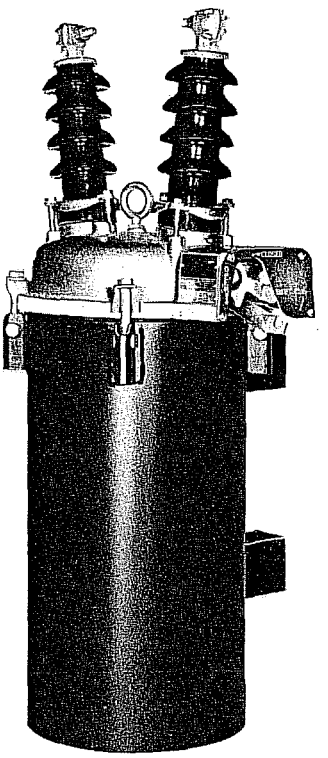

Single-Phase Power Class II

4.8 to 14.4 kv
25 to 280 amperes

Interrupting Capacity, rms symmetric amperes

4000 at 14.4 kv
5000 at 8.32 kv
6000 at 4.8 kv

ORDER OF CONTENTS

	Page
Description	2
Periodic Inspection and Maintenance	3
Oil Specifications	4
Shop Maintenance	5
Arc-Interrupting Assembly	5
Parts List, Arc-Interrupting Assembly	8
Solenoid Disassembly	9
Parts List, Solenoid Assembly	11
Hydraulic Mechanism	12
Parts List, Hydraulic Mechanism	14
Parts List, Operating Sequence Table	14
Changing Time Current Settings	15
Changing Operating Sequence	15
Sequence Adjustments	15
Bushings	16
Parts List, Bushings	16
Head Mechanism	17
Parts List, Head Mechanism	20
Parts List, Tank and Liner	19

This Bulletin Supersedes Bulletin 59198 Dated 2-62.

LINE MATERIAL INDUSTRIES | McGRAW-EDISON COMPANY | MILWAUKEE 1, WISCONSIN

PRICE $1.00

DESCRIPTION

A Type L recloser is a self-contained device that senses and interrupts fault currents on a single phase of a distribution line. The recloser automatically recloses and, if the fault is temporary, restores service. If the fault is permanent the recloser locks open after one, two, three, or four operations, depending upon its setting. Automatic resetting of this device enables it to distinguish between permanent and temporary faults. Thus, if a fault is temporary, the recloser resets and is then ready for a complete sequence should another fault occur.

Operating sequences of the recloser can be all fast, all delayed, or a combination of fast followed by delayed operations. Furthermore, any one of three delay curves can be used to insure coordination with other reclosers or protective devices. On coordinated systems fast recloser operations are used to clear temporary fault currents before branch-line fuses are damaged. Subsequent delayed openings allow time for fault currents to be cleared by branch-line fuses. Outages caused by permanent faults are thereby confined to shorter sections of line.

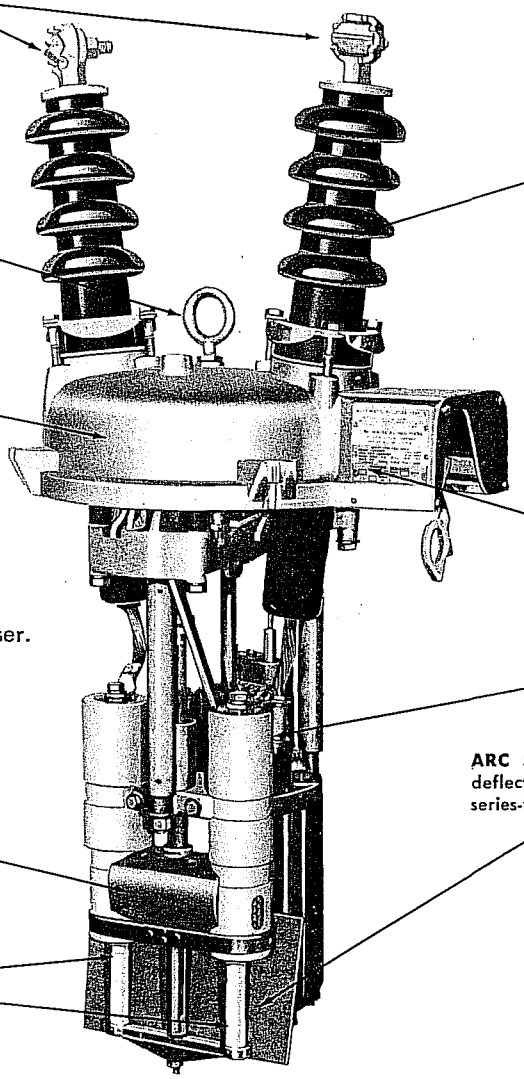

FIGURE 1
View of untanked recloser.

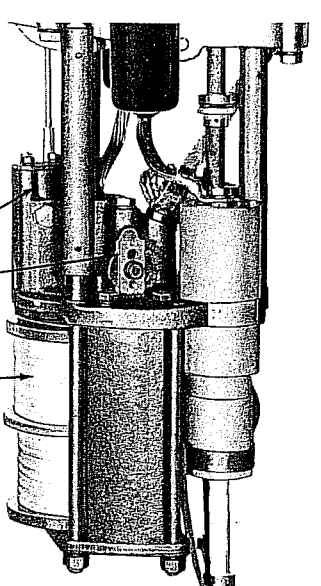

FIGURE 2
Hydraulic mechanism and series-trip solenoid.

GENERAL MAINTENANCE INFORMATION

Type L reclosers are widely applied to increase service continuity, reduce operating costs, and increase revenue. The L's high load and interrupting ratings make it suitable for use in important substations. The Type L can perform at peak efficiency and provide reliable circuit protection if adequate maintenance is performed. Maintenance is relatively easy and inexpensive when compared with the savings achieved by use of reclosers.

Arc interruption inherently results in reduction of some oil, which is a complex hydrocarbon, into various chemical compounds, free carbon, and gases. Adverse effects listed below result from addition of these chemical compounds to the oil.

1. Oil dielectric strength is reduced.
2. Water-absorbing particles are formed.
3. Under extreme conditions, recloser timing may be erratic.

For these reasons, oil must be replaced periodically.

Filtering of oil may remove absorbed and free water in addition to some other contaminants, and the dielectric strength can sometimes be raised to acceptable levels by this method. If, however, filtering does not remove water-absorbing contaminants, the oil's dielectric strength may fall rapidly after being returned to service. Therefore, a recloser undergoing periodic maintenance should be filled with new oil.

Frequency of maintenance depends upon local climatic conditions and the interrupting or switching duty imposed upon the equipment. L-M recommends units be completely inspected and cleaned at least once each year. Oil should be replaced under any of the following conditions:

1. When contaminated with sludge or carbon.
2. When dielectric strength has decreased to 18 kv or lower.
3. When the recloser has operated 72 times.

The Type L can usually operate at least 72 times without requiring an oil change. If, however, climatic conditions are severe or if most fault currents are near the recloser's rated capacity, more frequent oil changes will be necessary. Operating experience will actually provide the best guide for maintenance and oil replacement intervals.

Periodic maintenance, adjustments, and replacement of oil can be performed in the field. Repairs or major maintenance should be performed in the shop. Many users find all maintenance can be better handled in the shop. In this case, spare reclosers are installed temporarily, or reclosers can be shifted from one location to another so handling is reduced.

PERIODIC INSPECTION AND MAINTENANCE

Each periodic check should include at least the following steps:

1. Remove the recloser and replace with a temporary fuse or spare recloser.
2. Inspect external components. Check for broken bushings, paint scratches, or other mechanical damage. The counter reading should be noted and entered in the recloser record. Move the manual operating lever up and down to see if the counter is functioning properly.
3. Remove mechanism from tank. Loosen four bolts that secure the tank to the head casting, and loosen the gasket seal between tank and head casting. Hoist the mechanism out of the tank, and allow oil to drain off the mechanism.
4. Inspect moving contacts. Arcing tips of the moving contacts can experience considerable erosion before replacement is necessary. Contacts should be replaced before erosion of the load current transfer surfaces impairs their effectiveness.

   Figure 3 shows a set of contacts after severe interrupting duty, and a new set for comparison. The used set should be replaced. See page 5 for removal instructions.

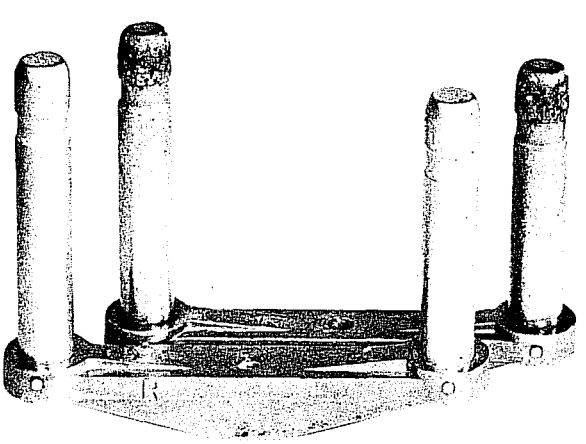

FIGURE 3
Moving contact assembly: right, after severe duty; left, new.

L-M type L RECLOSER

PERIODIC INSPECTION AND MAINTENANCE (cont'd)

5. Inspect exhaust chamber orifices. Each time fault or load current is interrupted by the Type L, the 12 holes in the exhaust port, figure 4, will experience some erosion. If any of these holes become enlarged to 9/64-inch in diameter, the exhaust structure should be replaced. A 9/64-inch drill can be used as a gage. See page 7 for disassembly instructions.

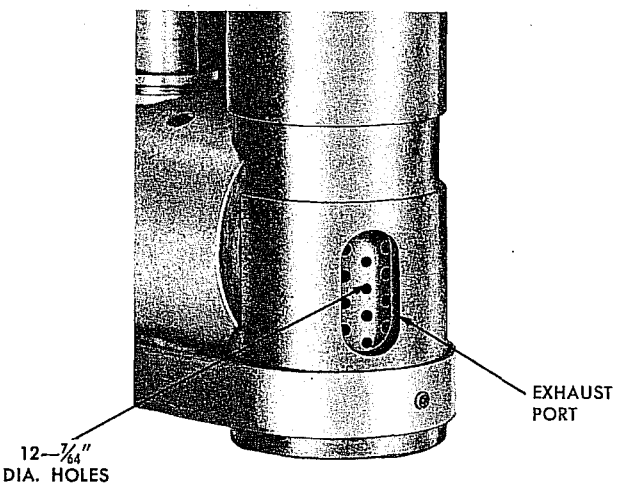

6. Inspect stationary contacts. If replacement of the exhaust structure or moving contacts is indicated, stationary contacts should also be inspected. If the exhaust structure and moving contacts appear to have further useful life, inspection of stationary contacts can be omitted. These contacts are designed to last at least as long as moving contacts.

   The two contact shoes of each stationary contact can be replaced without replacing fiber parts of the arc-interrupting structure. Best performance, however, will be achieved if complete stationary contact tube assemblies are replaced as a unit. See page 7 for disassembly instructions.

7. Clean all internal components. Remove all carbon traces by wiping with a clean, lint-free cloth. Pay particular attention to insulating members. Flush the mechanism with clean, dry insulating oil.

CAUTION: Never use volatile solutions, detergents, or water-soluble cleaners.

8. Inspect tank liners. Note that two liners are employed. The inner liner is fibrous and readily absorbs any moisture present. Soft or spongy areas indicate water has been absorbed. Replace the liner if these areas are present. The outer liner need not be replaced unless it is cracked. Figure 5 shows the method of removing the inner liner. Remove any carbon or sludge from the tank.

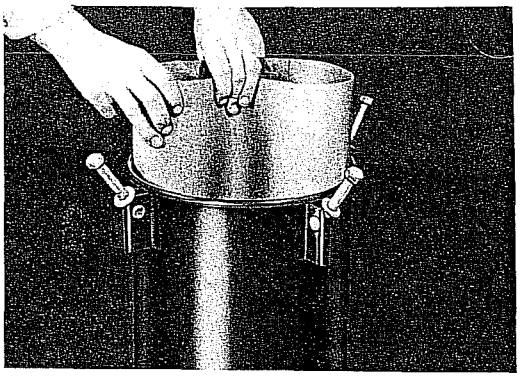

FIGURE 5
Removing tank liner.

9. Fill tank with oil. Use only new transformer oil having a dielectric strength of at least 26 kv, as measured across a standard 0.1-inch gap in accordance with methods illustrated in ASTM Publication No. D117. Seven gallons of oil will fill the tank to the correct level indicated by a line on the fiber liner. Oil for reclosers should possess properties listed below.

Color: nearly colorless (by Union colorimeter)	2.0 max.
Reaction	neutral
Neutralization number (milligrams of potassium hydroxide per gram sample)	0.03 max.
Free sulphur or corrosive compounds	none
Steam emulsion number (seconds)	25 max.
Flash point	145°C min. (293°F)
Fire point	160°C min. (320°F)
Pour point	—45.6°C max. (—50°F)
Viscosity	
at 37.8°C (100°F) Saybolt Universal	62 sec. max.
at 0°C (32°F) Saybolt Universal	320 sec. max..
Specific gravity; at 29.9°C (86.0°F)	0.895 max.
Specific heat	0.488 approx.
Co-efficient of expansion:	
at 0°C (32°F)	0.000725
at 100°C (212°F)	0.000755
Interfacial tension (dynes/cm)	40 min.
Dielectric constant	2.2
Dielectric strength	26000 volts min.
Weight per gallon	7.5 lbs.

10. Replace head gasket. This procedure is necessary to be sure moisture is excluded from the recloser.

11. Replace mechanism in tank. Re-position four head bolts and tighten evenly. Operate the unit manually about eight times to be sure no air remains in the hydraulic mechanism.

12. Test mechanical operation. An easy, effective test can be performed as follows:

    a. Move the operating lever to the CLOSED position and wait at least 4 minutes.

    b. Move the operating lever to the OPEN position, and listen for opening of the main contacts. Then quickly move the lever back to the CLOSED position.

    c. Continue opening and closing the recloser manually until lockout is achieved. This can be determined by listening for unlatching of the lockout mechanism and also by noting that the recloser mechanism will not latch when the lever is moved to the CLOSED position.

This test can be used to determine the number of operations to lockout. The number of fast and delayed operations can be noted also. Fast operations can be identified because the main contacts will open almost instantaneously when the operating lever is moved to the OPEN position. When delayed operations occur, a short time elapses between operation of the lever and opening of the contacts.

Direct-current testing to prove the recloser is in good operating condition can be performed as follows:

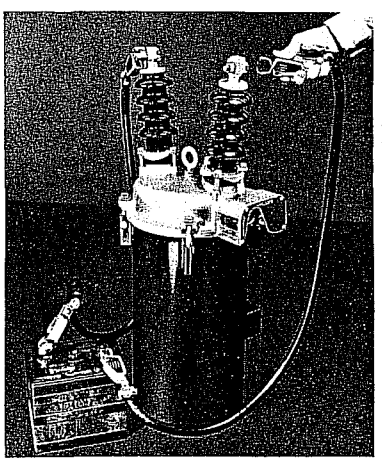

FIGURE 6
Battery testing.

a. Move the operating lever to the CLOSED position and wait 4 minutes.

b. Connect a storage battery across recloser terminals as shown in figure 6. Count the operations to lockout. If the correct number of operations did not occur, wait five minutes and repeat the test. Air in the hydraulic system can cause incorrect operation. Refer to Table I for the number of batteries to use for testing Type L reclosers.

TABLE I

RECLOSER RATING, AMPERES	NUMBER OF 6-VOLT BATTERIES*	CABLE SIZE, AWG
25	2	Short lengths of No. 6 or larger
35	2 (in series)	
50	2	
70	2	
100	2	
140	2 (in parallel)	
200	2	
280	2	

*Fully charged and in good condition.

SHOP MAINTENANCE

ARC-INTERRUPTING ASSEMBLY

When erosion has spread close to the load-current transfer surfaces of the moving contacts, the entire arc-interrupting assembly should be dismantled and inspected. New parts should be installed as necessary. Best results will be obtained if the entire assembly, consisting of moving contacts, stationary contacts, interrupter tubes and cross-blast tube, is replaced as a unit.

Observe the following procedures to perform this work:

1. Remove self-locking nut and washer from end of contact rod. See figure 7. Then drive out the roll pin that aligns the moving contact yoke. Lift off the moving contacts.

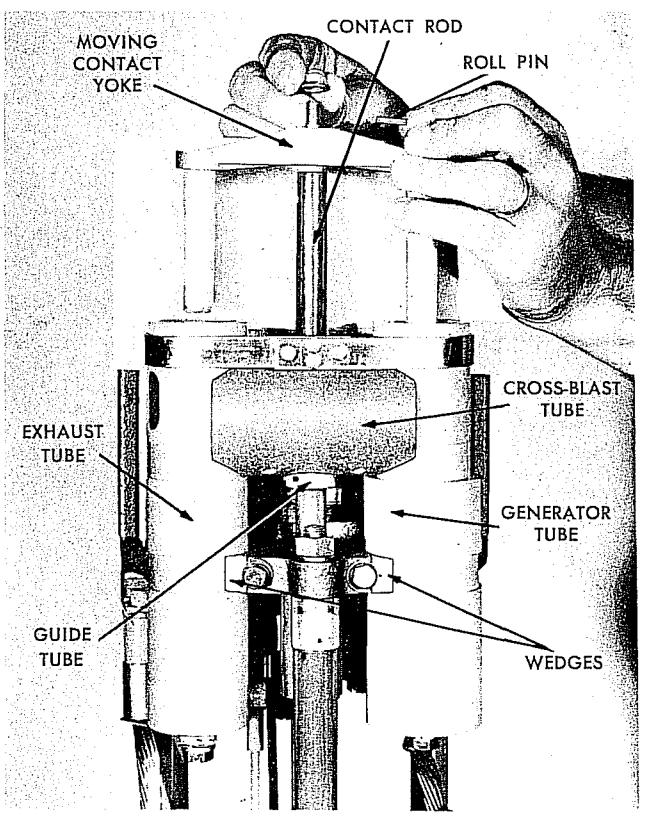

FIGURE 7
Moving contact yoke removal.

SHOP MAINTENANCE (cont'd)

2. Pull one retaining ring, figure 8, off of the guide tube. Slide this tube off the contact rod as illustrated in figure 9.

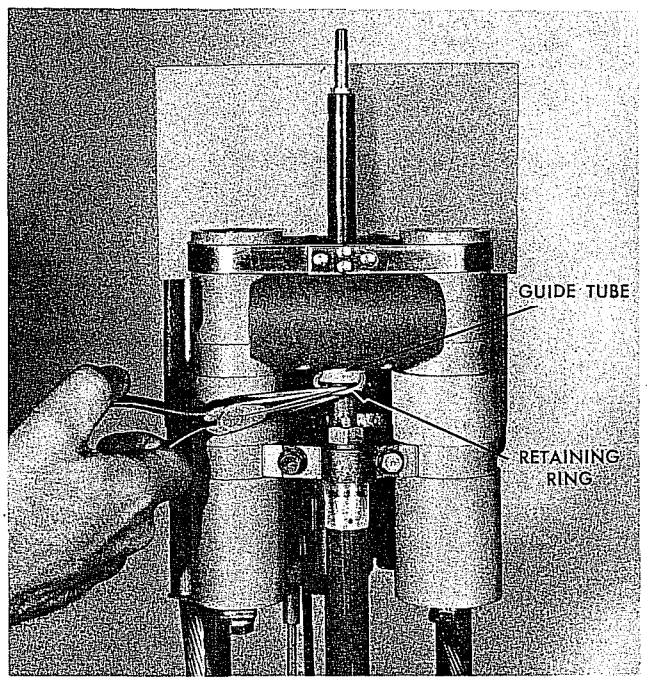

FIGURE 8
Releasing guide tube.

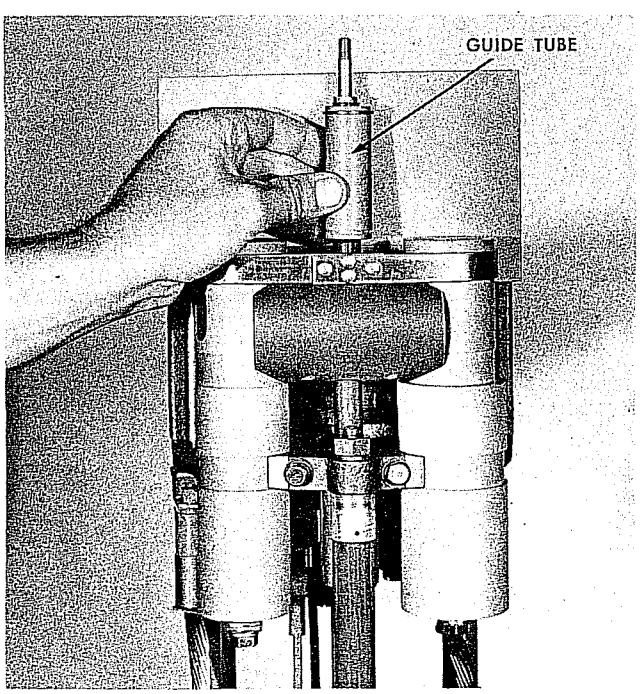

FIGURE 9
Removing guide tube.

3. Remove the cap screw and lock washer from the end of each contact tube. Then remove cap screws, lock washers, and flat washers to release contact tube wedges shown in figure 10.

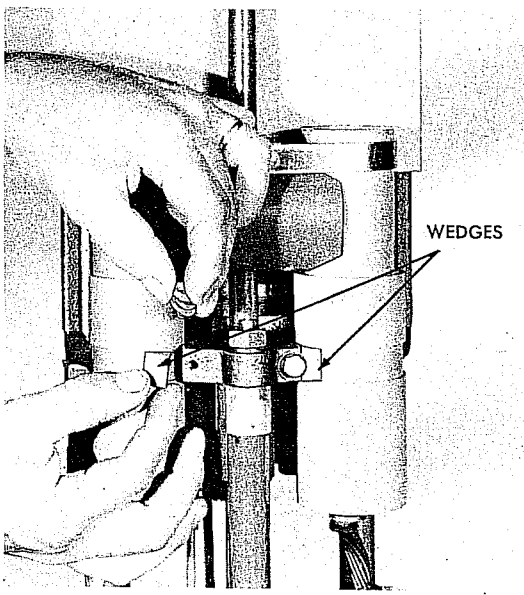

4. Grasp both contact tubes near the free ends and pull apart enough to cause the locking band, figure 11, to be released. A fiber pin may drop free from each tube when the cross-blast tube is separated from the contact tubes. Lift off the locking band and cross-blast tube.

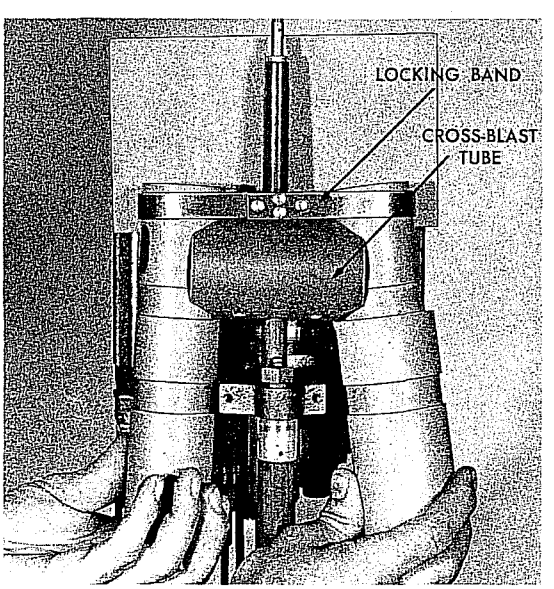

FIGURE 11
Separating contact tubes.

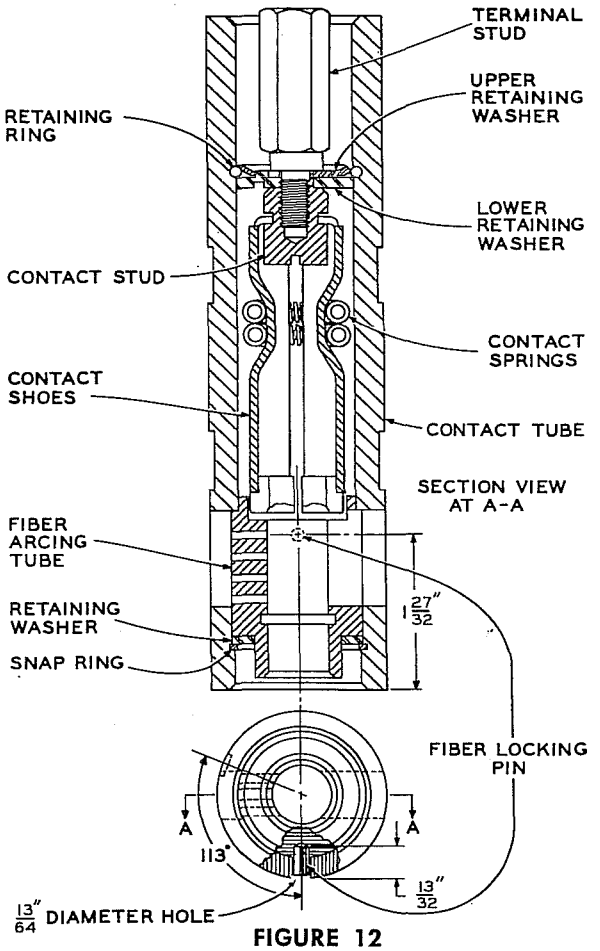

FIGURE 12
Cross-section view of exhaust tube.

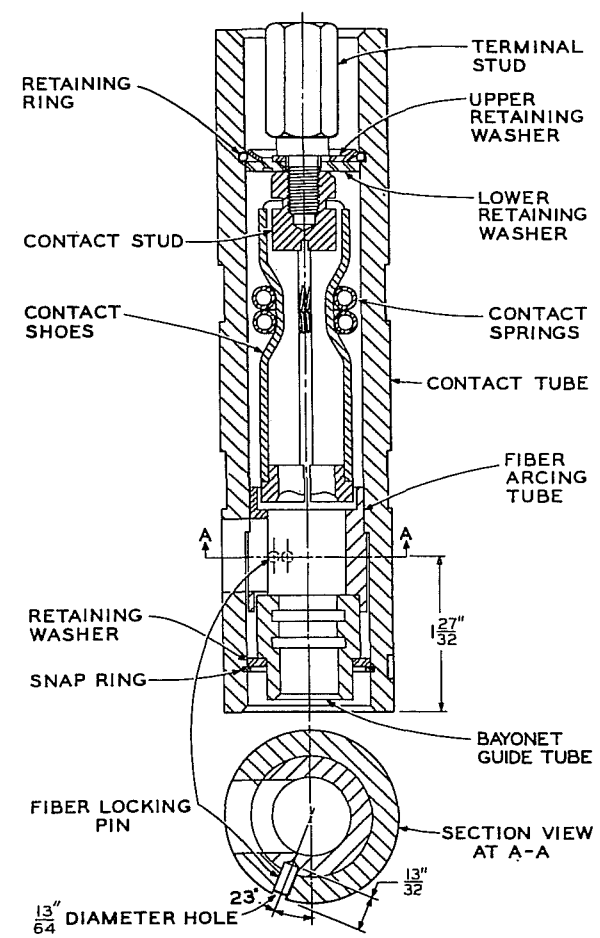

FIGURE 13
Cross-section view of generator tube.

5. Figures 12 and 13 show cross-section views of stationary contact tube assemblies. To dismantle either tube observe the following:

   a. With long-nose or Waldes-Truarc pliers remove the snap ring located at one tube end. Retaining washer will be released.

   b. Tap the tube to cause fiber locking pin to slide out if it has not already done so. Now pull out the bayonet guide tube.

   c. Insert a 1/2-inch x 1/16-inch screwdriver through the stationary contacts to engage the contact stud slot. With a 3/4-inch box wrench loosen the long hex terminal stud. Remove terminal stud, contact shoes, contact stud and both retaining washers. Retaining ring need not be removed. Completely disassembled contact tubes are shown in the parts list.

6. New stationary contacts and slightly eroded fiber parts can be installed in the old tubes but best results will be obtained if new tube assemblies are installed.

7. Reassemble contact tubes by reversing the procedure outlined in preceding paragraphs a, b, and c. If a new fiber arcing tube is to be installed in an old contact tube, a hole must be drilled to accept the locking pin. Refer to figures 12 and 13 for hole location and drill to a depth of 13/32-inch with a 13/64-inch bit.

CAUTION: Do not drill completely through the fiber arcing tube wall.

8. If further maintenance is to be performed, do not reassemble the arc-interrupting assembly yet. When reassembly is to be performed observe the following steps:

   a. Place the cross-blast tube between the contact tubes so that it seats in the lower tube slots. In addition, the cross-blast tube must be oriented so two small holes will be near the top and on the tank side of the interrupter.

   b. With tubes slightly apart at the top, slip clamping band in place and match indents in the tubes to small projections on the band. Align the tubes so they are parallel.

   c. Position the contact tubes and cross-blast tube and secure by means of the clamping wedges. Replace guide tube and make electrical connections to the tubes. Exhaust tube (vented) must be on the same side as the sleet hood.

   d. Replace moving contact assembly. Be sure the longer bayonet is positioned to go into the generator (unvented) tube.

L-M type L RECLOSER

PARTS LIST
ARC-INTERRUPTING STRUCTURE

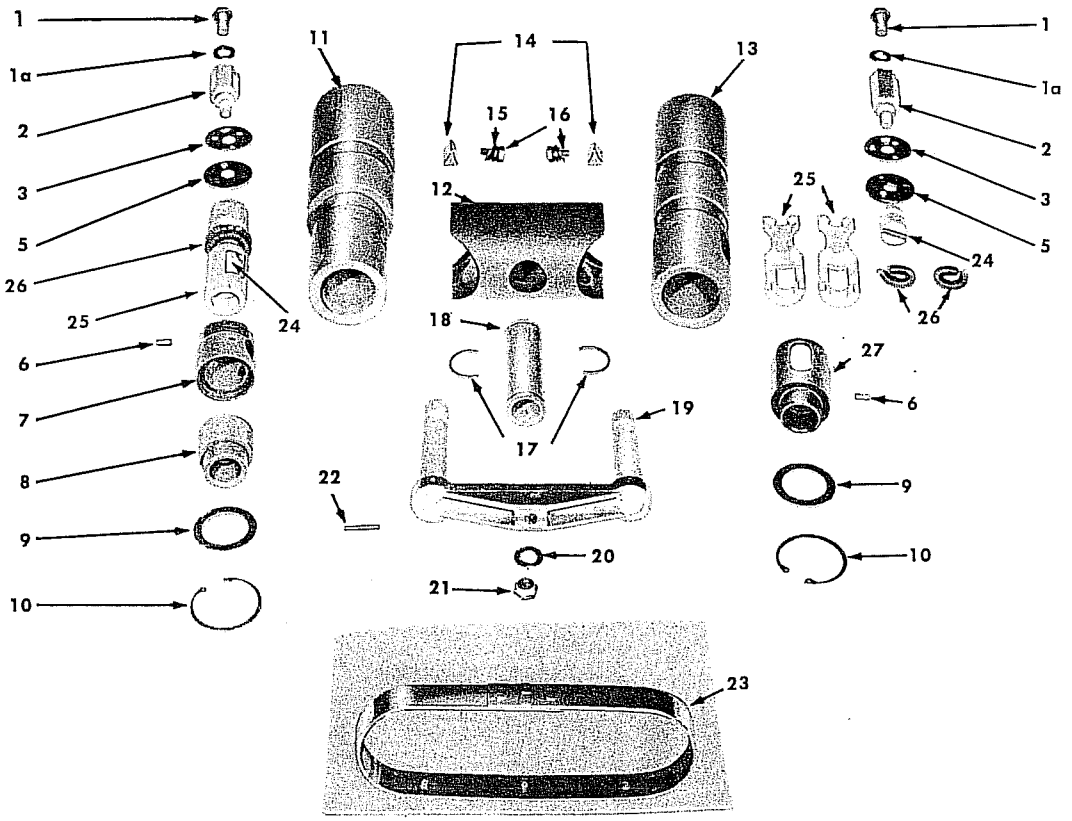

Item No.	Catalog Number	DESCRIPTION	No. used per recloser
1	KP196	Bronze hex mach scr — 3/8"—24NF2 x 3/4"	2
1a	KP326	Bronze lock washer — 3/8" x .141" x 0.94"	2
2	KP60L	Terminal stud — exhaust tube	1
	KP215L	Terminal stud — generator tube	1
3	KP170L	Upper retaining washer	2
4	KP168L	Wire retaining ring (not shown)	2
5	KP52L	Lower retaining washer and lock	2
6	KP3054A1	Fiber locking pin	2
7	KP62L	Fiber arcing tube — generator tube	1
8	KP51L	Fiber bayonet guide tube — generator tube	1
9	KP275L	Bottom retaining washer	2
10	KP2019A2	Retaining ring — No. 5000-145	2
	KA68L	Complete sta contact tube assem — generator above ser No. 3478, includes 1-10, 24, 25, 26	1
	KA33L	Complete sta contact tube assem — generator below ser No. 3478, includes 1-10, 24, 25, 26	1
11	KP58L	Generator tube only, below ser No. 3479	1
	KP232L	Sta contact housing, generator tube only above ser No. 3478	1
12	KP56L	Cross-blast tube	1
	KA34L	Complete sta contact tube assem, exhaust, includes 1-6, 9, 10, 24, 25, 26, 27	1

Item No.	Catalog Number	DESCRIPTION	No. used per recloser
13	KP57L	Exhaust tube only	1
14	KP44L	Contact tube wedge	2
15	KP344	Stl flat washer—1/4"	2
16	KP104	Stl hex cap scr—1/4" — 20NC2 x 1/2" and stl lock washer — 1/4"	2
17	KP80	Open-type ret ring XSO-238	2
18	KP55L	Guide tube	1
19	KA32L	Moving contact assem — above ser No. 9221	1
	KA12L	Moving contact assem and contact rod. Must be ordered together below ser No. 9222	1
20	KP350	Flat washer — 5/16" x 11/16" x 11/32"	1
21	KP286	Self-locking nut — 5/16" — 24UNC2	1
22	KP503	Roll pin — 1/8" x 13/16"	1
23	KA50L	Contact tube band assem	1
24	KP59L	Silver pl contact stud	2
25	KA29L	Silver pl contact shoe	4
26	KP95L	Contact garter springs	4
27	KP216L	Fiber arcing tube, vented — exhaust tube	1

SERIES-TRIP SOLENOID DISASSEMBLY

If the series-trip coil has been damaged in any way, or if the recloser is to be changed to a new rating, the series-trip coil can be replaced. New coils, gaskets, and data plates are shipped in sealed oil-filled cans. Coils should not remain out of oil any longer than necessary because moisture from the air may be absorbed. When a good coil is replaced, it should be stored in the same container that the new one was shipped in.

Note that one end of the coil is attached directly to the solenoid frame. When a recloser is uprated to 280 amperes, a shunt strip kit must be installed to increase conductivity of the frame. See figure 14. Specify catalog No. KA100L for a kit that includes items 3, 4, 5, 6, 7, 8, 10, and 11, shown in the parts list on page 11.

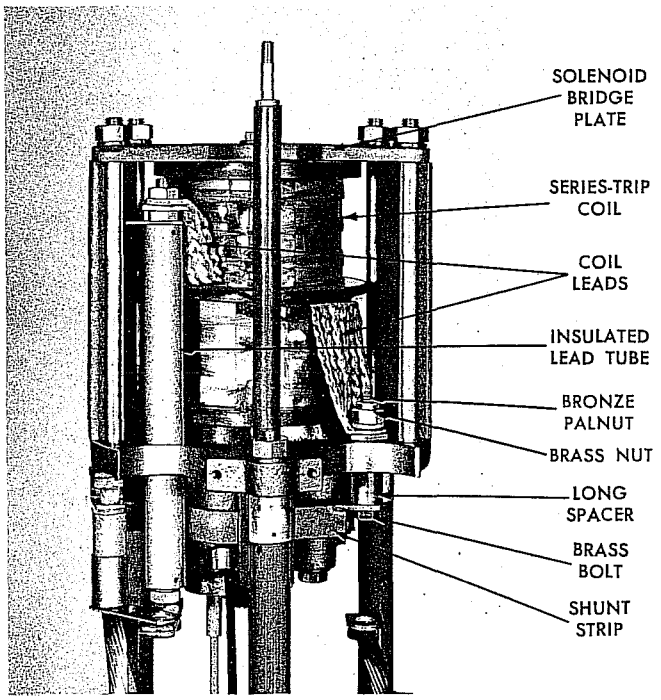

FIGURE 14
Series-trip solenoid. Below serial number L42755.

Observe the following procedure for disassembly of a series-trip solenoid:

1. If the arc-interrupting assembly has not been removed previously, observe procedures outlined on pages 5 and 6.
2. Disconnect coil leads. Figure 14 shows connections for coils with one short lead connected to an insulated lead tube. Coils with one long lead are directly connected to the contact tube and do not require this lead tube. See Figure 16 for arrangement of sleeved long lead used in place of insulated lead tube after serial number L42755.
3. Using a ¾-inch box wrench, remove four hex nuts that secure the solenoid bridge plate. Lift this plate off as shown in figure 15. Note that a

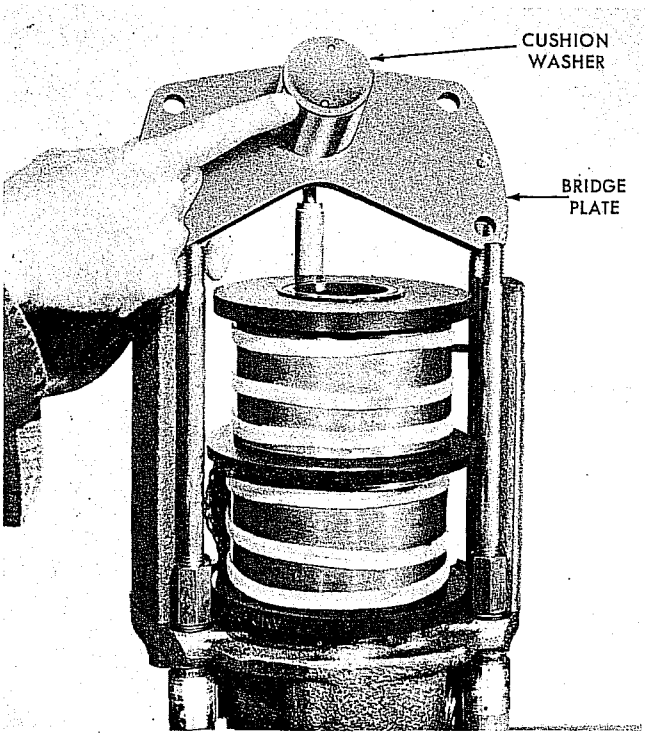

FIGURE 15
Bridge plate removal.

4. Lift off the coil and gasket. If recloser has an insulated lead tube, remove hexnut and lock washer from one end to release two flat bars. Pull the tube out of the solenoid frame.

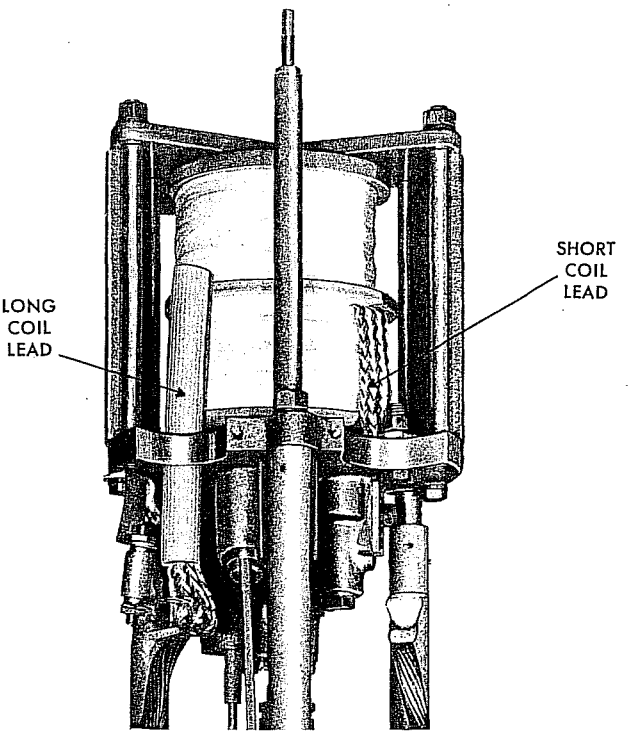

FIGURE 16
Series-trip coil, serial number L42755 and up.

SHOP MAINTENANCE (cont'd)

6. Remove the hex cap screw that secures the bypass gap, bushing lead, short spacer, and shunt strip to the frame. One solenoid frame shoe will also be released. See figure 17.

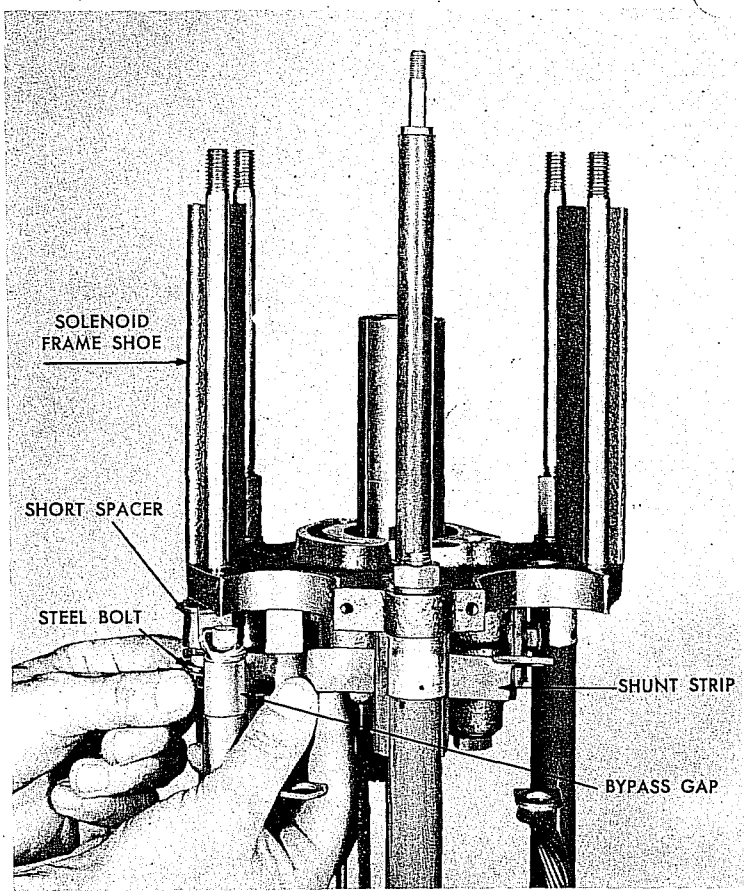

FIGURE 17
Releasing shunt strip, bypass gap, short spacer, and bushing lead (280-ampere recloser).

SERIES-TRIP SOLENOID REASSEMBLY

If further maintenance is to be performed, do not reassemble the solenoid yet. When the solenoid is to be reassembled, observe the following steps:

Units rated below 280 amperes

1. If old coil with two short leads is being reused, replace insulated lead tube and attach the two flat copper bars that connect to the one short coil lead. If new coil, with one long lead, is replacing the old coil, with two short leads, the insulated lead tube and the copper bars may be discarded.
2. Position solenoid frame shoe. Place a lock washer on the $\frac{3}{8}$-inch by $1\frac{1}{4}$-inch steel cap screw and secure one bushing lead and the bypass gap to the solenoid frame. This cap screw threads into the solenoid frame shoe.
3. Place a new gasket on the flanged end of the trip coil. Reposition the coil and secure the bridge plate. Reconnect one coil end to the lead tube if coil has two short leads, or to contact tube if coil has a long lead.
4. Secure other coil end to the solenoid frame by means of the $\frac{3}{8}$-inch by $1\frac{1}{2}$-inch steel hex cap screw. Note that a lock washer is used under the nut and another under the head of the cap screw.
5. Replace arc-interrupting structure as described on page 7.

Units rated 280 amperes

1. If old coil with two short leads is being reused, replace insulated lead tube and attach the two flat copper bars that connect to the one short coil lead. If new coil, with one long lead, is replacing, the old coil, with two short leads, the insulated lead tube and the copper bars may be discarded.
2. Place shunt strip in approximate location. Note that this bar is bent in an "S" shape on one end to pass around the insulated coil lead. Then position the solenoid frame shoe.
3. With the $\frac{3}{8}$-inch by 2-inch steel cap screw and lock washer, secure shunt strip, short spacer, bushing lead, bypass gap, and solenoid frame shoe to the solenoid frame.
4. Place a new gasket on the flanged end of the trip coil. Reposition the coil and secure the bridge plate. Reconnect one coil end to the lead tube or directly to the contact tube if coil has a long lead.
5. Slip the long spacer between the free end of the shunt strip and the solenoid frame. Push the $\frac{3}{8}$-inch by $2\frac{1}{2}$-inch brass cap screw through the shunt strip, solenoid frame, and other coil end. Add in order and tighten, the lock washer, nut, and palnut.
6. Replace arc-interrupting structure as described on page 7.

PARTS LIST
SERIES-TRIP SOLENOID ASSEMBLY

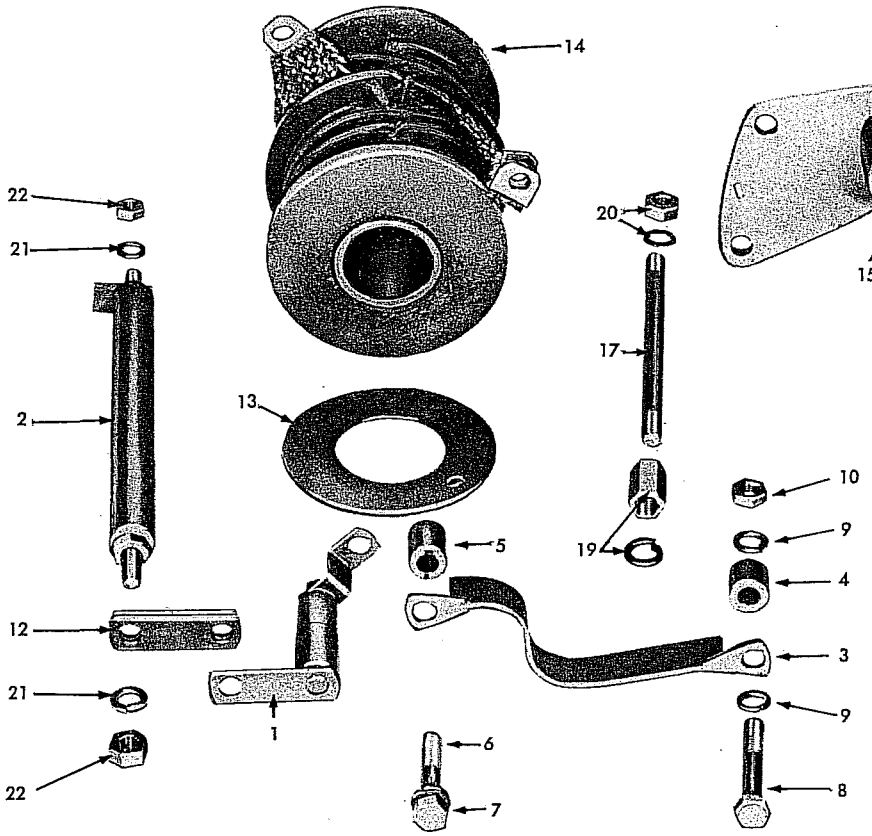

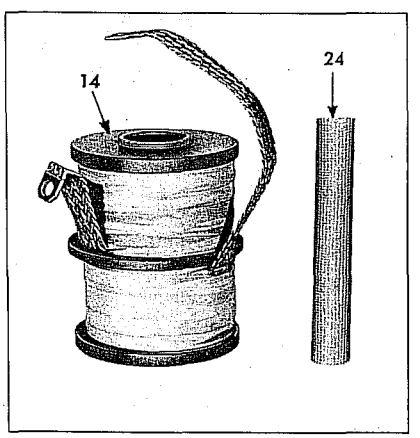

Coil assembly used after serial number L42755.

Item No.	Catalog Number	DESCRIPTION	No. used per recloser
1	KA60L	Coil bypass gap assy	1
2	KA702L	Lead rod assy	1
3	KA99L	Frame shunt bar	1
4	KP3013A8	Spacer — 5/8" long	1
5	KP3013A9	Spacer — 7/8" long	1
6	KP193	Stl hex cap scr — 3/8"—16NC2 x 1 1/4" (for units under 280 amperes only)	1
	KP415	Sstl hex cap scr — 3/8"—16UNC2A x 2" (for 280-ampere units only)	1
7	KP325	Stl Kantlink lock washer — 3/8" x .141" x .094"	1
8	KP419	Stl hex cap scr — 3/8"—16NC2 x 1 1/2" (for units under 280 amperes only)	1
	KP742	Brass hex cap scr — 3/8"—16UNC2A x 2 1/2" (for 280-ampere units only)	1
9	KP325	Stl Kantlink lock washer — 3/8" x .141" x .094" (for units under 280 amperes only)	2
10	KP591	Stl hex nut — 3/8"—16NC2 (for units under 280 amperes only)	1
	KP599	Brass hex reg nut — 3/8"—16UNC2B (for 280-ampere units only)	1
11	KP277	Bronze hex lock nut — 3/8"—16UNC (for 280-ampere units only) (not shown)	1
12	KP130L	Copper connecting links — 3/4" x 2 3/8" x 1/8"	2
13	KP15L	Coil gasket, upper	1
14	KA36L	Coil assy (Show coil rating by suffix. Example: KA36L200=200-amp coil)*	1
15	KA85L	Plunger stop assy	1
16	KP10L	Bridge plate	1
17	KP314L	Solenoid tie bolt — short, below 31114	2
18	KP29L	Solenoid tie bolt — long (not shown)	2
19	KP31L	Tie bolt spacer nut and stl lock washer — 7/16" x .156" x .109", below 31114	2
20	KP45L	Stl hex nut and stl lock washer	4
21	KP326	Bronze lock washer — 3/8" x .141" x .094"	2
22	KP282	Brass hex nut — 3/8"—24NF2	2
23	KA100L	Kit for field addition of frame shunt, includes items 3, 4, 5, 6, 7, 8, 10, and 11	1
24	KP242EA2	Sleeve, long coil lead	0

***NOTE:**

When units below L6995 are to be uprated to 200 or 280 amperes the following parts should be replaced in addition to the solenoid coil:

1. Both bushing leads. Install one KA18L and one KA19L.
2. Lead rod assembly. Install one KA702L lead rod assembly.

In addition, an extra copper connecting link, item 12, should be installed.

PARTS LIST NOTE

Type L reclosers below serial 31114 used two short tie bolts (17) with fastening hardware 19 and 20. To eliminate the tie bolt spacer nuts, longer tie bolts are now used. These new tie bolts are threaded directly into the short stringers and fastened with nuts and washers at the bridge plate. When replacing either old stringer or tie bolt specify kit No. KA707L which includes new stringer KA122L and a new tie bolt KP314L.

SHOP MAINTENANCE (cont'd)

HYDRAULIC MECHANISM

This mechanism should require no maintenance but components may be changed to provide different operation sequences. Furthermore, removal of this mechanism may be required to gain access to the head operating mechanism.

Observe the following steps:

1. On reclosers below serial number 31114 remove the three hexnuts and lock washers, figure 18, that secure the hydraulic frame to the insulating stringers. Note that two of these nuts are double length and are joined to long studs that secure the solenoid bridge plate. On reclosers after serial number 31114 tie bolt spacer nuts are not used. Disassemble by using one hexnut and lock washer for the long insulating stringer at the hydraulic frame and remove tie bolts.

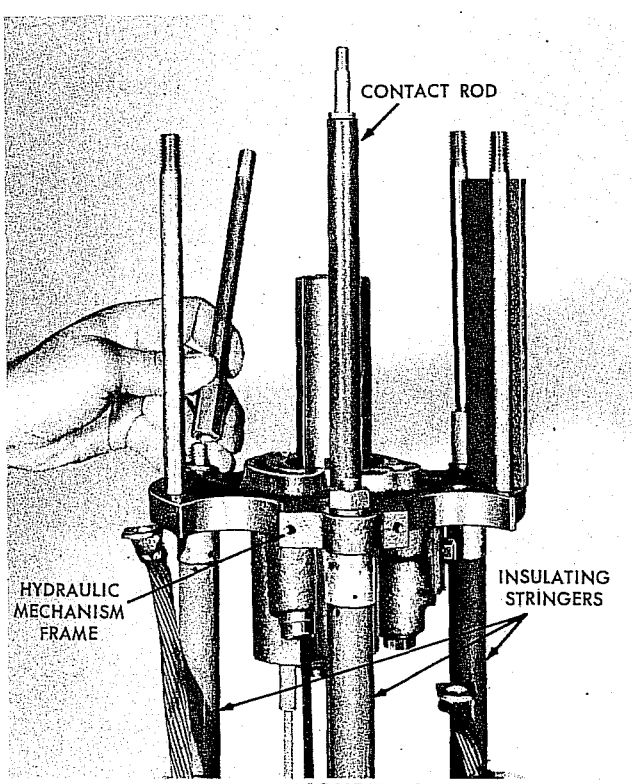

FIGURE 18
Hydraulic mechanism removal.
Below serial number 31114.

2. Grasp the solenoid plunger and pump piston link with one hand and carefully lift off the frame with the other hand as illustrated in figure 19.

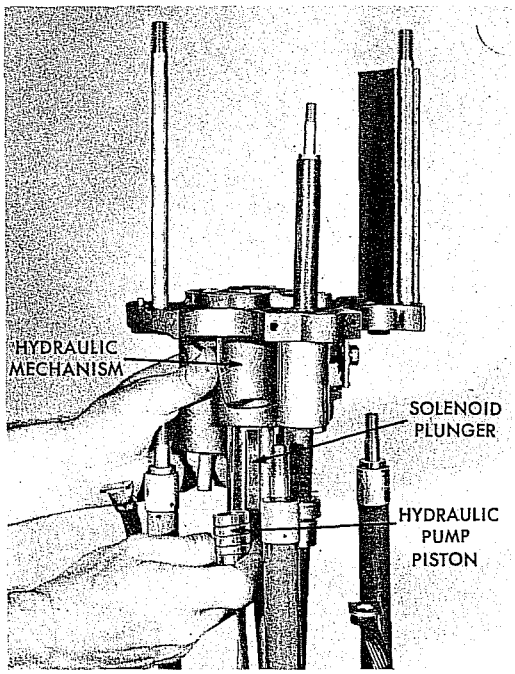

FIGURE 19
Hydraulic mechanism being lifted off.
Below serial number 31114.

3. With a 1/2-inch wrench, remove the cap screw that secures the operation selector plate, orifice plate, and gasket. See figure 20.

4. Using a 5/8-inch wrench, remove the control valve assembly. Tip the frame so the valve element falls out.

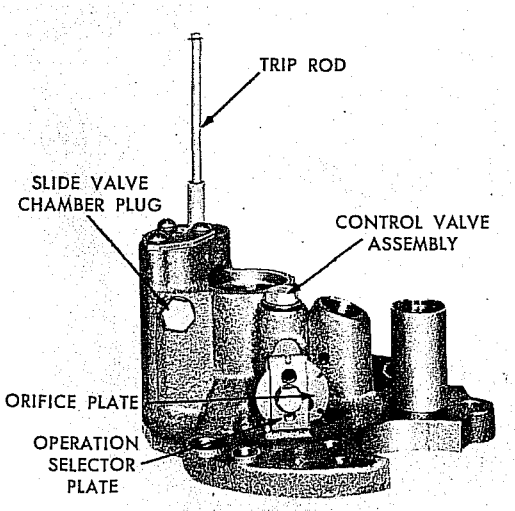

FIGURE 20
View of hydraulic mechanism.

5. Remove the slide valve chamber plug and gasket by means of a 5/8-inch wrench. Parts removed in steps 3, 4, and 5 are shown in figure 21.

6. Remove the slide valve plate and gasket by releasing three screws. Tip the frame so the valve will slide out.

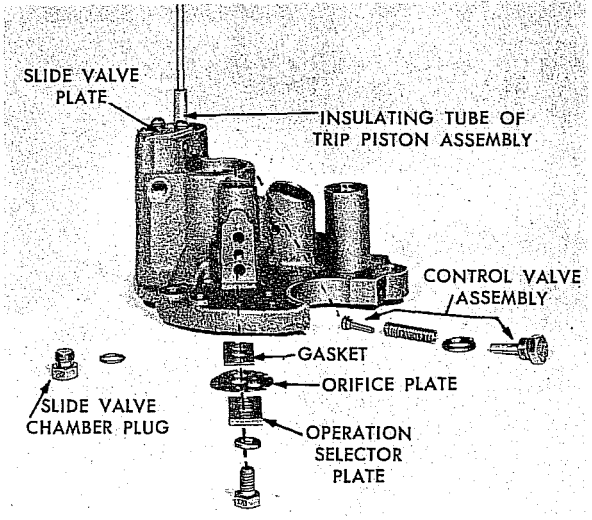

FIGURE 21
Hydraulic mechanism partially disassembled.

7. With the wire hook, pull the ball check valve seat out enough to expose the spring and insert a thin plate as demonstrated in figure 22. Then push the pin out to release the spring. A steel ball will be released. Lift out the trip piston. Figure 23 shows parts removed in steps 6 and 7.

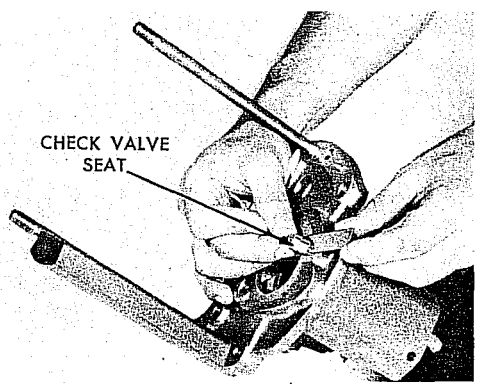

FIGURE 22
Removing check valve seat.

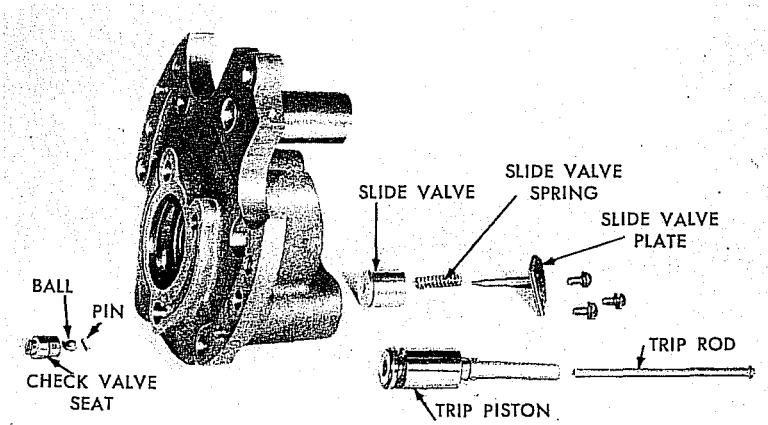

FIGURE 23
Slide valve, check valve, and trip piston.

8. The pump piston can be removed if necessary by turning the outer shell off the piston body. Then push out the pin that connects the body to the insulated link. See figure 24.

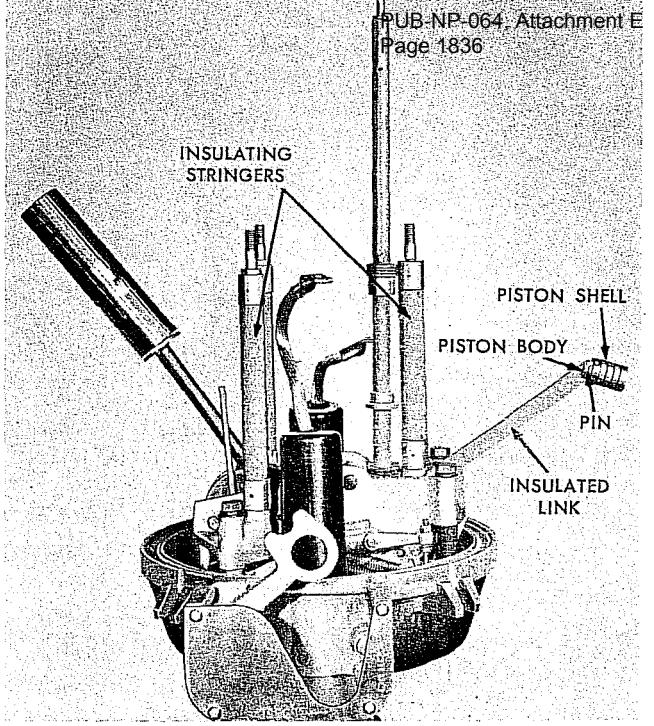

FIGURE 24
Removal of stringers and pump piston.

If further maintenance is to be performed, do not replace the hydraulic mechanism yet. When ready for reassembly, observe the following steps:

1. Refer to Table II and page 15 for components to be used for a particular operating sequence.

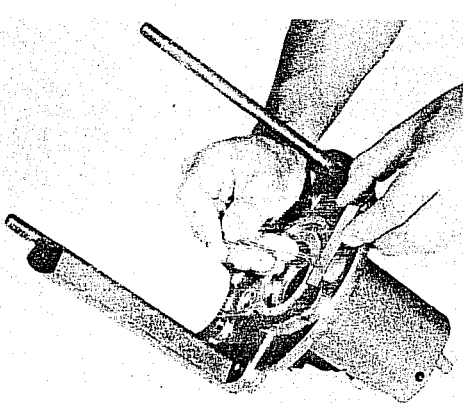

FIGURE 25
Pulling out trip piston spring.

2. Insert the trip piston in its cylinder. Pull the spring out as shown in figure 25 and insert a thin plate to hold it. Secure the ball check valve seat to the spring by inserting the pin, but be sure the small steel ball is also retained by the pin.

3. Replace the slide valve, slide valve spring, and slide valve plate and gasket assembly. Next, replace the slide valve chamber plug and the operation selector assembly. Use a new gasket, KP-382, with the slide valve chamber plug.

4. Pin the pump piston body to the insulated link and screw on the outer shell. When adjustments, page 15, have been made, stake the shell to the body by means of a small prick punch.

L-M type L RECLOSER

SHOP MAINTENANCE (cont'd)

PARTS LIST
HYDRAULIC MECHANISM

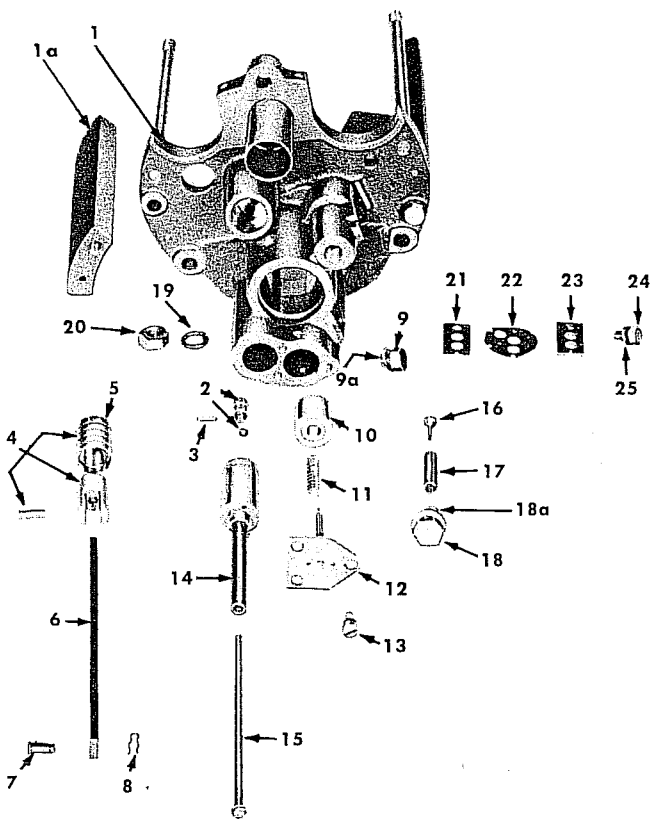

Item No.	Catalog Number	DESCRIPTION	No. used per recloser
1	KA69L	Solenoid frame assembly	1
1a	KP12L	Frame shoe	2
2	KP155H	Ball check valve seat and ¼" stl ball	1
3	KP3051A1	Pin	1
4	KA25H	Pump piston assem	1
5	KP151H	Pump piston shell only	1
6	KP112L	Pump piston link	1
7	KP85L	Pivot pin — includes item 8	1
8	KP423	Spring clip, No. 1137, .035"	1
9	KP119L	Vent plug	1
9a	KP382	Type A gasket — ½" x 11/16" x 5/64"	1
10	KP104L	Slide valve } See Table II	1
	KA66L	Slide valve }	
11	KP213L	Slide valve spring	1
12	KA61L	Slide valve stop assem } See Table II	1
	KA64L	Slide valve stop assem }	
13	KP477	Stl rd hd scr — ¼"—20NC2 x ½"	2
	KP355	Lock washer — ¼"	3
14	KA94L	Piston and rod guide assem }	
	KA95L	Piston and rod guide assem } See Table II	1
	KA106L	Piston and rod guide assem }	
	KA109L	Piston and rod guide assem }	
15	KP108L	Trip rod } See Table II	1
	KP197L	Trip rod }	
16	KP193L	Control valve	1
17	KP113L	Control valve spring	1
18	KP118L	Control valve stop screw	1
18a	KP3013A12	Stl lock washer — ½" x .170" x .099"	5
19	KP334	Stl lock washer — 7/16" x .156" x .109"	5
20	KP271	Hex hd stl nut — 7/16"—14NC2	1
21	KP222L	Operations selector gasket	1
22	KP123L	Plate, selector, std.	1
23	KP223L	Plate, clamping	1
24	KP420	Stl hex cap scr — 5/16"—18NC2 x ½"	1
25	KP324	Lock washer — 5/16" x .125" x .078"	1

TABLE II

PART NUMBERS USED FOR VARIOUS OPERATING SEQUENCES

SEQUENCES	TRIP PISTON	TRIP ROD	SLIDE VALVE	SPRING, SLIDE VALVE	STOP SLIDE VALVE	FAST SHOT PLUG	SPACER UNDER TRIP PISTON
4 fast	KA94L	KP108L	KP104L	KP213L	KA61L	–	–
3 fast	o	o	o	o	o	–	KP233L
2 fast	o	o	o	o	o	–	KP332H
1 fast	o	o	o	o	o	–	KP309L
4 retarded	o	o	KA66L	–	o	KP119L	–
3 retarded	o	o	KA66L	–	o	KP119L	KP233L
2 retarded	o	o	KA66L	–	o	KP119L	KP332H
1 retarded	o	o	KA66L	–	o	KP119L	KP309L
1F—3R	KA95L	KP197L	o	o	KA64L	KP119L	–
1F—2R	o	o	o	o	o	KP119L	KP233L
1F—1R	KA96L	o	o	o	o	KP119L	KP233L
2F—2R	o	o	o	o	o	KP119L	–
2F—1R	KA106L	o	o	o	o	KP119L	–
3F—1R	KA109L	o	o	o	o	KP119L	–

o — Same part no. as in top line for four fast operations.

– — Not used in this sequence.

CHANGING TIME CURRENT SETTINGS

Time current curves for the Type L recloser indicate minimum trip and the interrupting capacity range plotted to an average clearing time for each opening of the recloser contacts. Recloser curves are labeled to represent their relative speed of opening with A being fast, B retarded, C extra retarded, D steep retarded, E an intermediate retarded and F a slightly less retarded curve than B curve.

To provide all operations on the A curve the fast shot blocking plug KP119L is removed. To select operations on the B, C, or D curves merely loosen the capscrew and clamping plate and re-index the orifice selector plate to the desired retarded curve. For all operations on the E curve the KP123L selector plate is removed and a KP180L plate is inserted and indexed in its place. For an AE operation use a KP226L selector plate. F curve operation requires the removal of the fast shot blocking plug KP119L and its substitution with a KA123L control valve. Selector plate setting for this F curve is indexed at B.

CHANGING OPERATING SEQUENCE

Specified combinations of hydraulic parts as listed in Table II permit the recloser to operate along one curve (single timing) or with a combination of two curves (dual timing). When set for dual timing, the recloser operates first on a fast curve and then on a slower curve. After a selected number of operations the recloser locks out. The following drawings illustrate the location of the various parts used for changing the operating sequence to lockout.

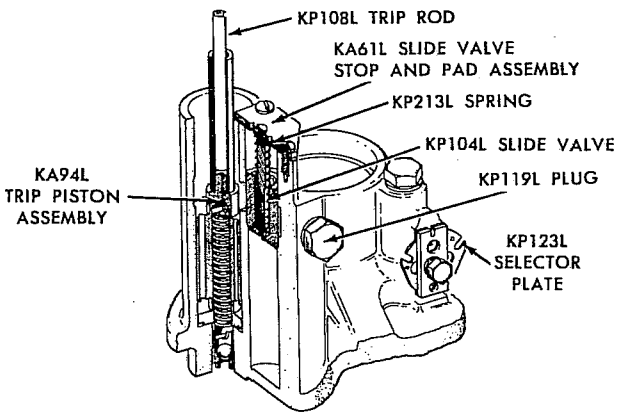

Parts for most commonly used sequence, two fast and two retarded.

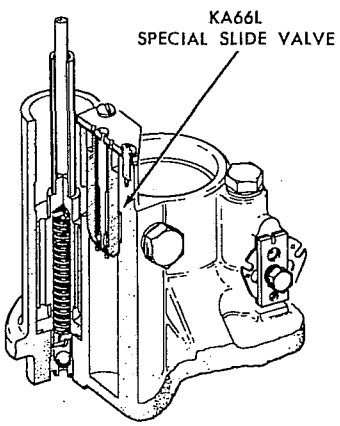

Installation of special slide valve used for retarded only operations. No slide valve spring is used.

When replacing a new slide valve KA66L, which is used for retarded operations, it may be necessary to remove any projection resulting from the tolerance provided for the depth of the slide valve base. Any projection may be removed with a file so that the slide valve will fit flush to .008 of an inch above the slide valve base.

SEQUENCE ADJUSTMENTS

After any change or servicing of the hydraulic mechanism make sure of removing any air that may have been entrapped by operating the yellow control handle manually seven or eight times. All changes should also be verified with the testing procedures that are explained on page 5. It may also be necessary to adjust the hydraulic pump piston shell to enable pumping action to lockout in the following manner:

a. Lower the unit into the oil enough to cover the hydraulic system. Operate the recloser manually several times to dispel any air in the hydraulic system.

b. Close the recloser, wait 4 minutes, and rapidly trip and close the recloser three times. Then observe the position of the trip rod. This rod should just be touching the adjustable lockout level in the head mechanism.

c. If the trip rod is not correctly positioned, turn the pump piston shell to cause it to pump more or less oil as required. Turning the shell off the body tends to increase travel of the trip rod, whereas turning the shell into the body decreases trip rod travel.

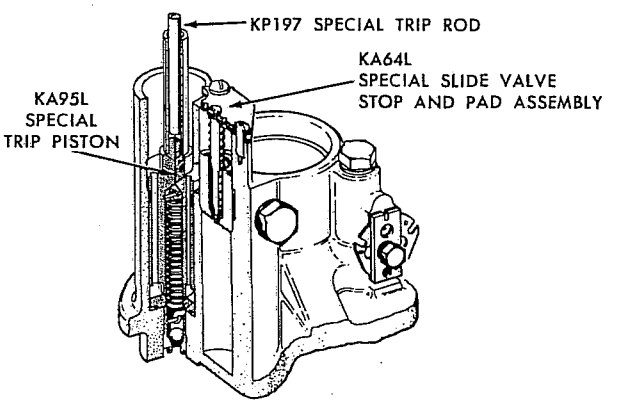

Special parts used for one fast and three retarded sequence.

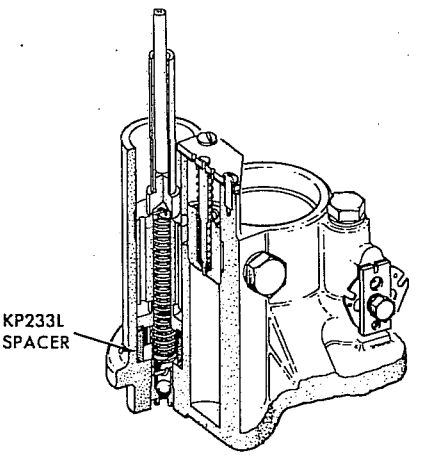

Location of spacer under trip piston.

SHOP MAINTENANCE (cont'd)

BUSHINGS

Maintenance of bushings is ordinarily limited to an occasional cleaning. If, however, a bushing is cracked or chipped, replace as follows:

1. Porcelain only can be replaced without untanking the recloser.
   a. Turn the bushing terminal counter-clockwise to remove it. Lift off the terminal gasket.
   b. Remove three bolts that secure the bushing clamps and lift the porcelain out of the head casting.
   c. Position a new bushing gasket on the head mechanism. Slide new porcelain over the bushing lead and turn it so the terminal on the lead is seated properly.
   d. Remove the aluminum clamping gasket from the old bushing and put it on the new porcelain. Secure the bushing clamps. Add the terminal gasket and terminal.
2. Replace entire bushing assemblies as follows:
   a. If bushing leads have not been disconnected, observe procedure on page 10.
   b. Remove bushing clamps and lift out entire bushing as illustrated in figure 26.

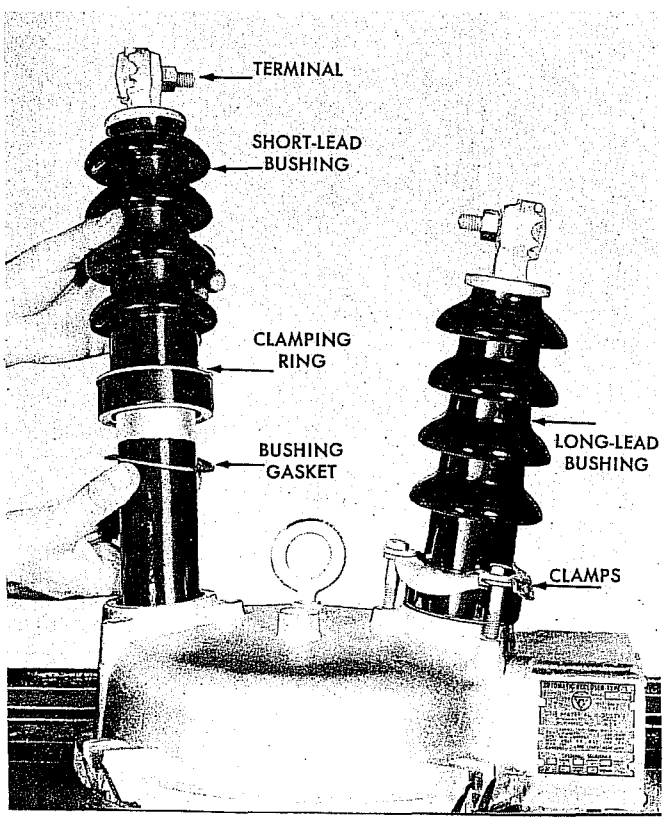

FIGURE 26
Lifting out bushing assembly.

NOTE: The lead in one bushing is longer than the other. The long-lead bushing is installed on the side next to the sleet hood.

If further maintenance is to be performed, do not replace the bushings yet. When bushings are to be installed, merely clamp them in place, but use a new gasket. Also, be sure to use the aluminum clamping ring between the clamps and the porcelain.

PARTS LIST
BUSHINGS

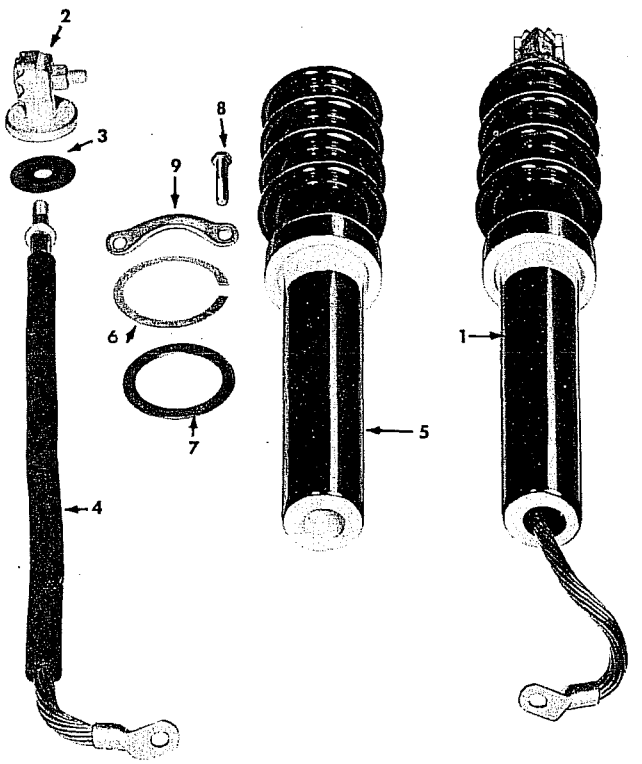

Item No.	Catalog Number	DESCRIPTION	No. used per recloser
1	KA25L	Long-lead bushing assy	1
	KA26L	Short-lead bushing assy	1
2	KA47L	Terminal assy	2
3	KP120L	Terminal gasket, upper	2
4	KA18L	Long-lead assy	1
	KA19L	Short-lead assy	1
5	KP1L	Bushing, porcelain only	2
6	KP121L	Bushing clamping gasket	2
7	KP335H	Bushing gasket, lower	2
8	KP415	Sstl hex cap scr — 3/8"—16NC2 x 2"	6
			6
9	KP41L	Galv bushing clamp segment	6

HEAD MECHANISM

Disassembly of the head mechanism should rarely be required. Should this be necessary for any reason observe steps outlined below.

1. Move operating lever to the OPEN position.
2. Figure 27 shows a head assembly as it appears after arc-interrupting structure, series-trip solenoid, hydraulic mechanism, insulating stringers, and bushings have been taken off. Remove self-locking nut and four hex cap screws indicated in figure 27. Note use of flat washer under cap screw nearest the operating lever. Also note that two pipe spacers will be released.

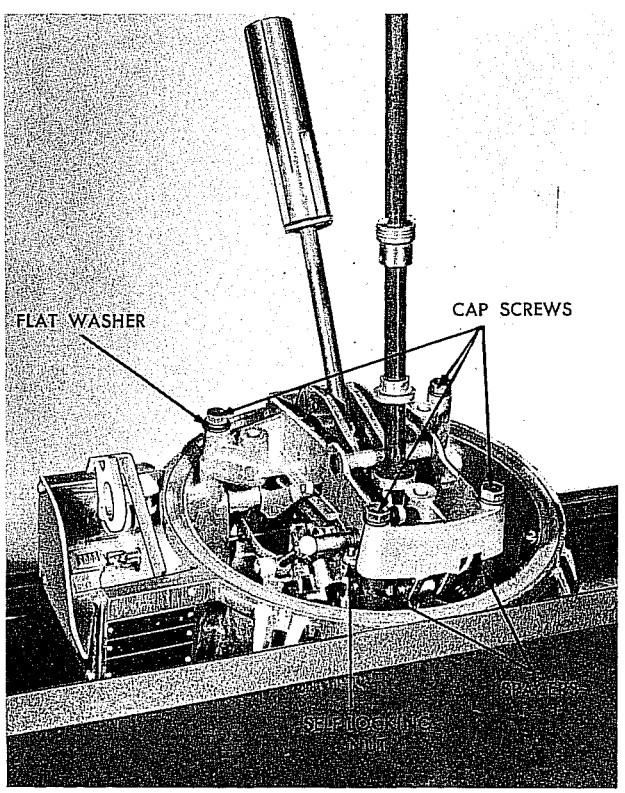

FIGURE 27
Head operating mechanism.

3. Lift the operating mechanism assembly to expose the pivot point. Remove the "C" ring and pull out the pin. Lift out the entire mechanism.
4. Remove "C" ring, figure 28, and pull pin that secures the solenoid plunger to the operating mechanism. Then pull off spring clip and remove pin that secures the contact rod.

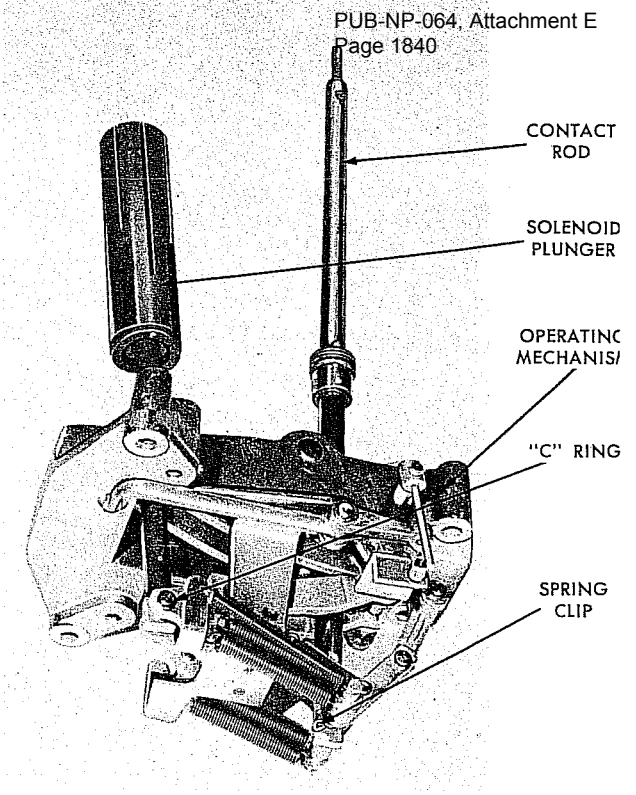

FIGURE 28
Releasing plunger and contact rod.

5. Figure 29 shows the head assembly as it appears after the operating mechanism has been removed. Unhook lockout spring and operating lever spring.
6. Remove sleet hood cover. Then drive out a pin (not shown) in the lockout lever.

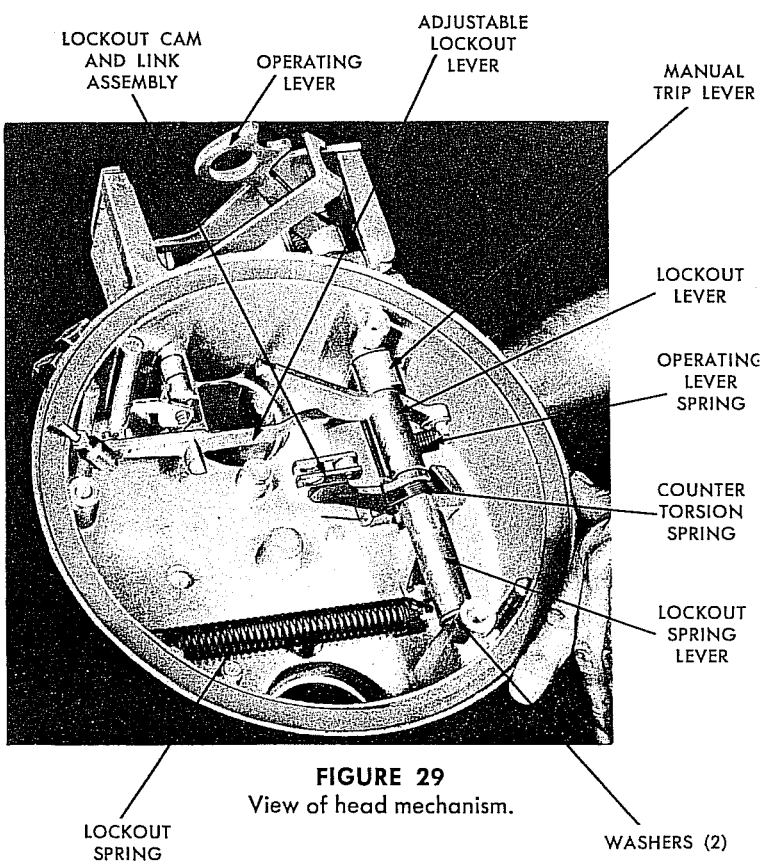

FIGURE 29
View of head mechanism.

SHOP MAINTENANCE (cont'd)

7. Pull the operating lever and remove manual trip lever. Then lift out the lockout spring lever, lockout cam and link assembly, and lockout lever. See figure 30.

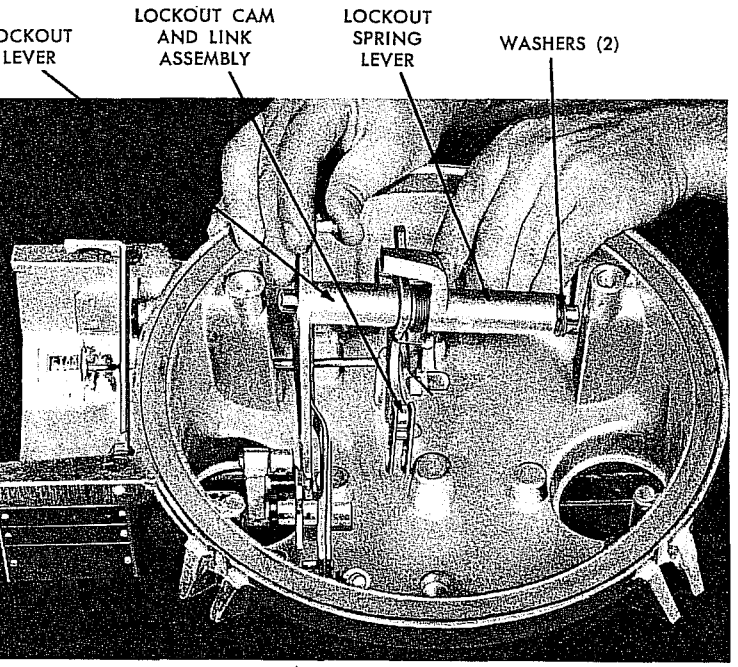

FIGURE 30
Head mechanism parts being removed.

8. Drive out the roll pin that secures the counter lever assembly to the counter shaft as illustrated in figure 31. Disconnect the counter and pull out the shaft. Note two flat washers that separate the counter lever assembly and a post in the head casting.

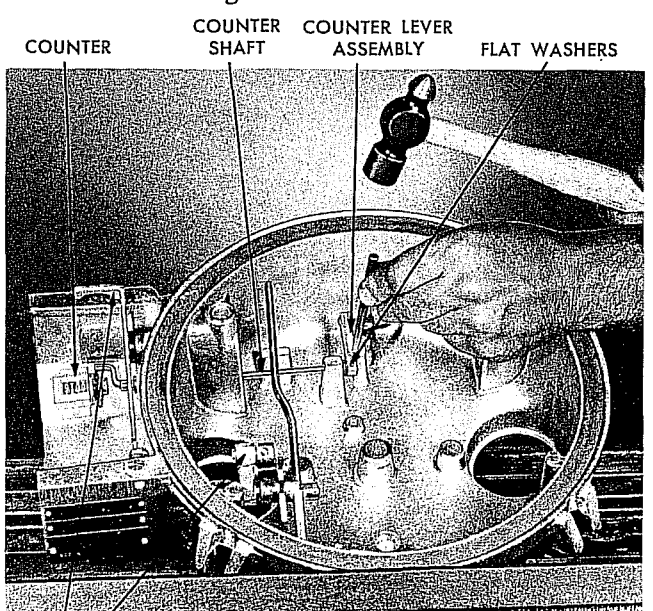

FIGURE 31
Driving out pin in counter shaft.

9. Slip off the adjustable lockout lever. See figure 32.

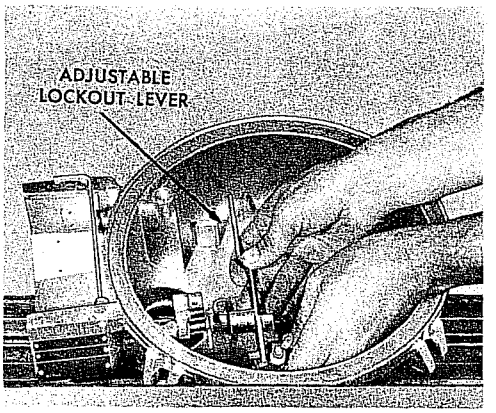

FIGURE 32
Lifting out adjustable trip lever.

All major components have been removed at this point with the exception of the non-reclosing accessory. Description of removal of this device is omitted because such procedure should never be necessary.

Reassembly of the head mechanism, can in general be accomplished by reversing the foregoing procedure. Some helpful precautions are noted below.

1. Install counter parts first.
2. Next, position adjustable lockout lever. See figure 32.
3. Slide lockout spring lever, counter spring, lockout cam and link assembly, and lockout lever onto their shaft. Note that the hollow shaft end must point toward the sleet hood. Position this assembly. Be sure to include the two flat washers on one end of the shaft. See figure 33.

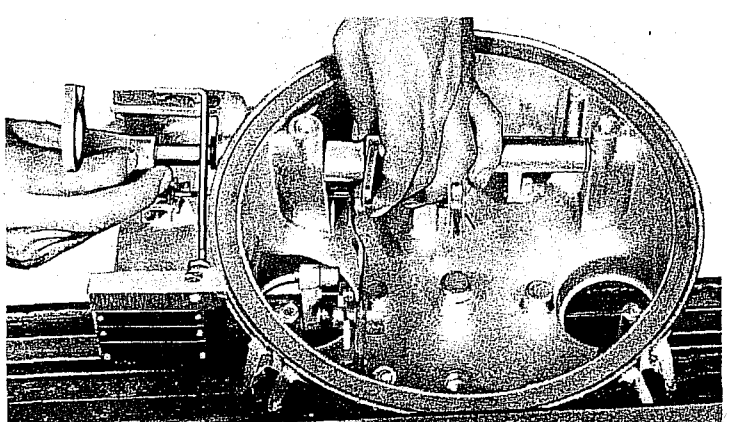

FIGURE 33
Reassembling head mechanism.

4. Now position manual trip lever and insert operating lever. Pin the lockout lever to the operating lever.

5. Connect solenoid plunger and contact rod to the operating mechanism. Bolt operating mechanism in the position shown in figure 27, page 17.

6. Connect adjustable lockout lever to the operating mechanism by replacing the self-locking nut removed in step 2, page 17. Tighten this nut and then back it off one-half turn.

7. Check adjustment of the lockout mechanism as follows:

   a. Grasp the insulating tube portion of the trip piston assembly, (see figure 22, page 13), and lift it until the trip piston contacts the slide valve stop. Make a light scribe mark on the insulating tube 1/4-inch above the slide valve stop.

   b. Release the trip piston tube and move the operating lever to the CLOSED position.

   c. Hold the operating lever with one hand to prevent the recloser from opening out of oil. Then slowly raise the insulating tube of the trip piston assembly. Recloser should trip just as the light mark, made in step a, moves even with the top of the slide valve stop.

   d. If tripping does not occur as described in step c, adjust self-locking nuts shown in figure 34 to achieve correct operation. Note that the mechanism cannot operate properly if the nuts are tight against the operating mechanism lever. Always back off either nut one-half turn before testing.

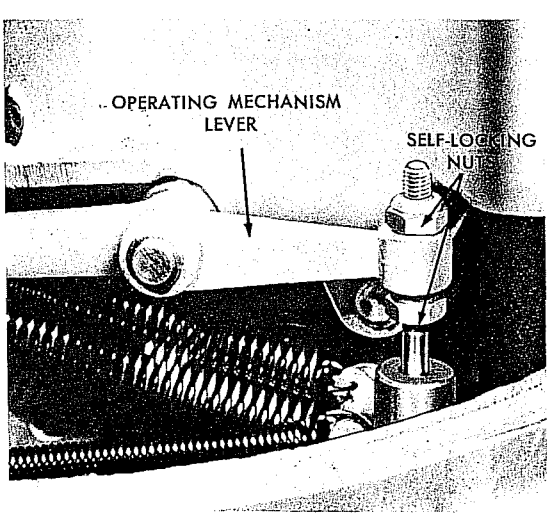

FIGURE 34
Adjustable lockout lever setting.

PARTS LIST
TANK AND LINER

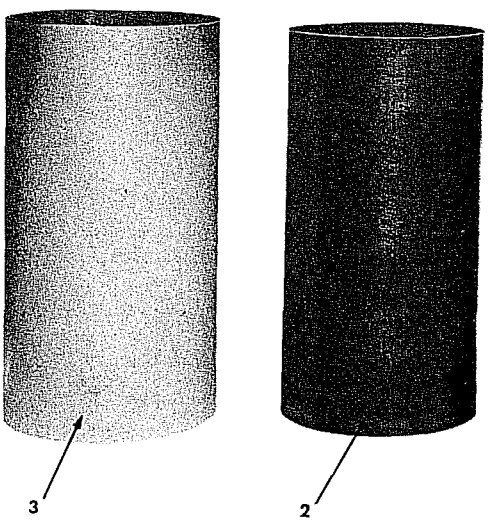

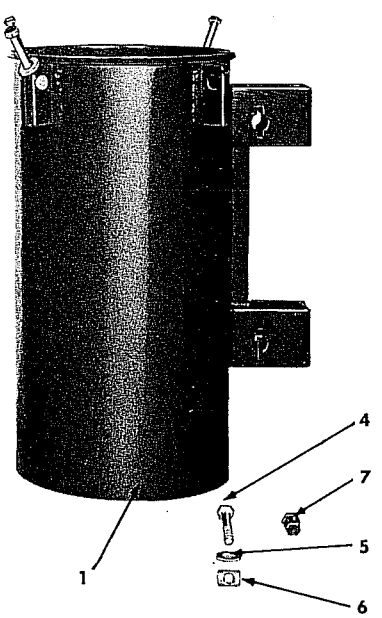

Item No.	Catalog Number	DESCRIPTION	No. used per recloser
1	KA4L	Tank assy.	1
2	KP190L	Tank wall insulation	1
3	KP191L	Liner	1
4	KP186	Electro zn-pl stl hex cap scr — 1/2"—13NC2 x 3 1/4"	4
5	KP2028A23	Galv stl washer — 17/32" x 1 1/8" x 1/8"	4
6	KP86L	Galv combination stl nut and pin	4
7	J-2A	Ground connector	1

PARTS LIST
HEAD MECHANISM

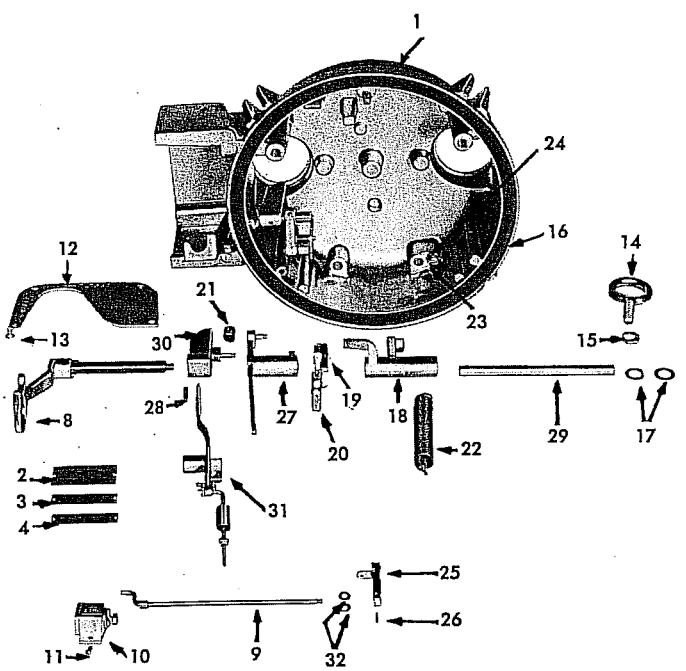

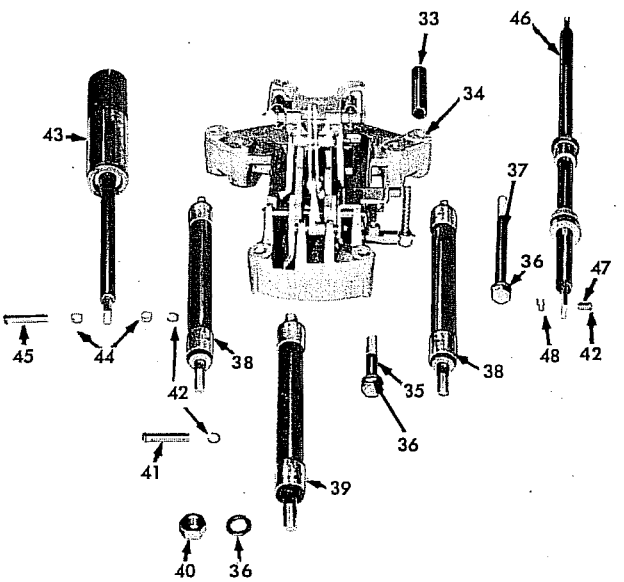

Item No.	Catalog Number	DESCRIPTION	No. used per recloser
1	KA705L	Head casting — below ser No. 12100	1
	KA706L	Head casting — above ser No. 12099	1
2	KP181L	Name plate and mtg scrs	1
3	KP182L	Coil data plate, add cont. current rating	1
4	KP183L	Operating data plate, add sequence	1
5	KP3118A2	*½" groove pin; trip lever pivot	1
6	KP347H	*Bushing in cover, counter shaft	1
6a	KP269L	*Bushing in cover, operating handle	1
7	KP933	*Open-type retaining ring, WA-522	1
8	KA92L	Operating lever includes shaft assem — KA5L	1
9	KA9L	Counter shaft assem — below ser No. 8749	1
	KA84L	Counter shaft assem — ser No. 8749 to 12100	1
	KP258L	Counter shaft assem — above ser No. 12099	1
10	KA708L	Counter kit below ser No. 37202	1
	KA28C01	Counter kit above ser No. 37202	1
11	KP45	Rd hd self-tapping scr — No. 4 x 5/16"	2
12	KP117L	Sleet hood cover plate — below ser No. 26082	1
	KP292L	Sleet hood cover plate — above ser No. 26081	1
13	KP50	Sstl rd hd Phillips self-tapping scr — No. 12 x ½"	4
14	KP74H3	Electro zn-pl stl eye bolt — ½"—13NC2 x 1¼"	1
15	KP2064A6	Palnut	1
16	KP131L	Head gasket	1
17	KP346	Flat washer — zinc plated AN960-816L	2
18	KP14L	Lockout spring lever	1
19	KP158L	Counter torsion spring	1
20	KA27L	Lockout cam and link assem	1
21	KP27H	Operating lever spring	1
22	KP99L	Lockout spring	1
23	KP464	Zinc pl stl rd hd scr — ¼"—20UNC2A x 5/8"	1

Item No.	Catalog Number	DESCRIPTION	No. used per recloser
24	KP279	Zinc pl stl hexnut — ¼"—20UNC-2B	1
25	KA8L	Counter lever assem — below ser No. 26082	1
	KA118L	Counter lever assem — above ser No. 26081	1
26	KP132	Sstl groove pin — 3/32" x ½", Type 2	1
27	KA17L	Lockout lever assem	1
28	KP121	Groove pin — 1/8" x 1¼", Type 1	1
29	KP77L	Operating shaft	1
30	KA5L	Manual trip lever assem — part of item 8, KA92L	1
31	KA20L	Trip lever assem	1
32	KP3006A7	Spacer, counter shaft	1
33	KP33L	Operating mech frame spacer	2
34	KA37L	Operating mech assem	1
35	KP744	Stl hex cap scr — 7/16"—14NC2 x 2½"	2
36	KP334	Stl lock washer — 7/16" x .156" x .109"	9
37	KP194	Stl hex cap scr — 7/16"—14NC2 x 5½"	2
38	KA10L	Insulating stringer, long	2
39	KA122L	Insulating stringer, short — above ser No. 31114, below see KA707L	1
	KA707L	Insulating stringer Kit — short below ser No. 31114, includes KP314L	1
40	KP271	Stl hex nut — 7/16"—14NC2	5
41	KP3118A2	Pivot pin	1
42	KP76	Retaining ring, WA516	5
43	KA28L	Solenoid plunger assem	1
44	KP3007A10	Spacer	2
45	KP3125A4	Pivot pin	1
46	KA117L	Contact rod assem	1
47	KP3125A1	Pivot pin	1
48	KP421	Spring clip, No. 1090 narrow, .041" dia. wire	1
49	KP354	Std light stl flat washer — 7/16" x 5/64" x .080" (See figure 27, page 17).	

*Not shown

Reclosers

Cooper Power Systems

Types RX, and W Maintenance Instructions

S280-30-8
Service Information

14.4 Kv • 400 Amp (Type RX) (Serial No. 679 and after)
14.4 Kv • 560 Amp (Type W) (Serial No. 7334 and after)

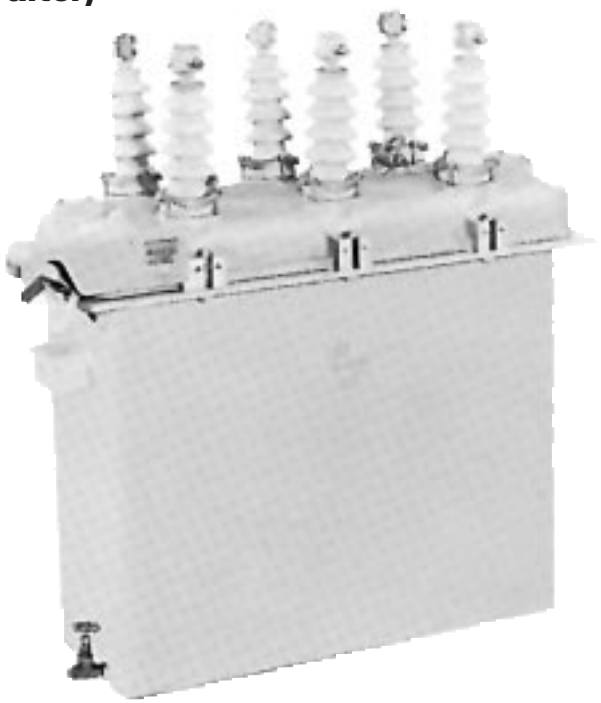

CAUTION
Do not energize this equipment out of oil.

Figure 1.
Type RX oil -interrupting, hydraulically controlled, automatic circuit recloser. 86819KMA

CONTENTS

Introduction **2**
Description and Operation **2**
General **2**
Manual Operating Handle **2**
Non-Reclosing Lever **2**
Contact Position Indicator **2**
Interrupters **3**
Closing Solenoid **3**
Closing Solenoid Contactor **3**
Hydraulic Pump and Lockout Piston **3**
Series Trip Solenoids **3**
Time Delay Unit **3**
Mechanism Operation **3**
Hydraulic Control System Operation **5**
Maintenance **5**
Frequency of Maintenance **5**
Periodic Maintenance Inspection **5**
Manual Operation of the Recloser **6**
Mechanism In Oil **7**
Mechanism Out of Oil **7**
Insulation Level Withstand Tests **8**
Oil Condition **8**
Shop Maintenance Procedures **8**
Control Lever Overtravel Adjustments **8**
Bushings **9**
Interrupters Assembly **9**
Closing Solenoid Contactor **10**
Closing Solenoid **10**
Series Trip Solenoid **11**
Solenoid Disassembly **11**
Solenoid Replacement **11**
Time Delay Unit **11**
Maintenance **12**
Replacement **13**
Reinstalling Mechanism into Head **13**
Testing **13**
Service Parts List **13**
Bushing Part (Figure 24) **14**
Head and Tank Assembly (Figure 25) **16**
Trip Coil and Interrupter Mechanisms (Figure 26) ... **18**
Closing Solenoid and Hydraulic Control Parts (Figure 27) **20**

These instructions do not claim to cover all details or variations in the equipment, procedure, or process described, nor to provide direction for meeting every possible contingency-during installation, operation, or maintenance. When additional information is desired to satisfy a problem not covered sufficiently for the user's purpose, please contact your Cooper Power Systems sales engineer.

January 1987 • New Issue

INTRODUCTION

Service Information S280-30-8 provides the maintenance instructions for Type RX, and W three-phase, hydraulically controlled, vacuum reclosers. Included is a general description of the recloser and its operation, instructions for periodic inspection and routine maintenance, testing procedures, and instructions for shop repairs. A service parts list, keyed to exploded-view drawings of the recloser is included at the back of the manual.

DESCRIPTION AND OPERATION

General

The Type RX, and W reclosers are self-controlled devices that sense and interrupt distribution system fault currents. They automatically reclose to restore service if the fault is temporary and then reset for another programmed sequence of operations. If the fault is permanent the recloser locks open after one, two, three or four operations, depending upon its operating settings. All three phases open, close, and lock out simultaneously.

Opening sequences of these reclosers can be all fast, all delayed, or any combination of fast followed by delayed operations; up to the maximum of four operations. On coordinated systems, fast operations clear temporary faults before branch-line fuses can be damaged. Delayed openings allow time for fuses or other downline protective devices to clear so that permanent faults can be confined to smaller sections of line

Closing energy, as well as energy to charge the opening springs, is supplied by a high-voltage closing solenoid which is momentarily connected phase-to-phase through a high-voltage contactor.

A "trip-free" yellow operating handle, located under the sleet hood, will manually lock open the recloser. It cannot manually close the recloser, but must be in the CLOSED position for the closing solenoid contactor to operate. A red contact position indicator, linked to the recloser mechanism but independent of the yellow operating handle, is also located under the sleet hood.

The location of the major components of a RX recloser are shown in Figure 2. They are similar for the W recloser. Being aware of the location of these components and their operation will provide a quicker and clearer understanding of the recloser maintenance and repair procedures that follow.

Manual Operating Handle

When the recloser operates to lockout, the (yellow) manual operation handle drops down ("trips-free") from under the sleet hood, to give a visual indication of recloser lockout. The handle must be reset manually before the recloser can be closed. Lifting the handle up mechanically closes the closing solenoid contactor, and if power is available to the closing coil circuit, the closing solenoid will energize, resetting the recloser.

A closed recloser can be manually opened and locked out by pulling down the yellow handle.

Non-Reclosing Lever

The non-reclosing lever provides the capability for locking out the recloser on the first trip operation regardless of the programmed number of operations to lockout.

Contact Position Indicator

The red arrow-like contact position indicator flag is coupled to the recloser mechanism to show the position of the main contacts. When the flag is down, the vacuum interrupter contacts are open; when the flag is up, the contacts are closed.

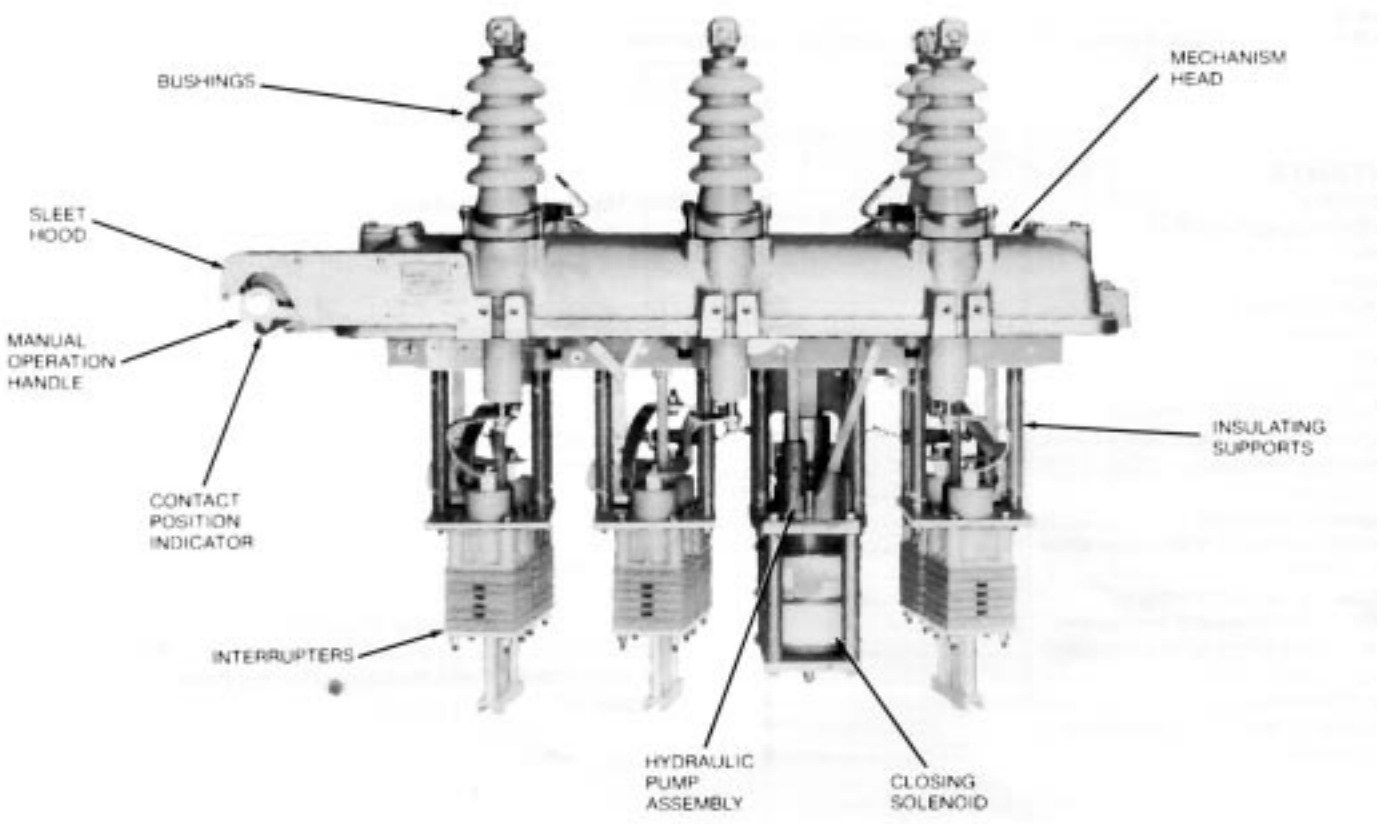

Figure 2.
Untanked Type RX recloser.

86821KMA

Interrupters
Circuit opening and fault interruption is achieved by bridge-type contacts that provide two current breaks in series per phase. The bayonet-type moving contacts are silverplated tungsten alloy for erosion resistance and good conductance. The stationary contact assemblies are tulip-type clusters of silverplated contact fingers held together by garter springs. The contacts are self-cleaned by the opening and closing wiping action.

Each current break is provided with a self-generating-type arc interrupter structure which includes a series of vented chambers. As the contacts open, the arc generates gas pressure in the upper chamber which blasts oil across the arc and out through the vents. As a result, arc extinction is fast and arc energy levels do not increase as fast at higher fault-current levels.

Closing Solenoid
The moving contacts of the interrupters are closed by the closing solenoid, which also extends the opening springs in the head mechanism. This solenoid is energized for only a few cycles during each closing operation when it is momentarily connected across phases B and C.

Closing Solenoid Contactor
Mechanically operated by the head mechanism, the snap-action contacts of the closing coil contactor complete the high-voltage circuit to the closing solenoid for each closing operation.

Hydraulic Pump and Lockout Piston
The hydraulic pump counts the number of times the recloser trips. With each trip the pump piston is pushed into the pump cylinder, oil is forced through the lockout cylinder check valve into the lockout cylinder. This causes the lockout piston to be raised one step.

When the recloser resets the pump piston is pulled back to the top of the pump cylinder and oil is drawn in through the intake check valve.

If the recloser trips again the pump piston will actuate causing the lockout piston to be pushed up another step. This cycle will repeat until the recloser locks out. Once locked out the quick reset rod is mechanically raised allowing the lockout piston to quickly resettle. If the recloser does not lockout, the lockout piston will resettle gradually (at a rate of approximately 90 seconds per accumulated operation at 25°C).

Series Trip Solenoids
The series trip solenoids (Figure 3) are connected in series with the interrupters, each carries full line current. When line current exceeds the minimum trip rating of a coil, by approximately 200 percent, the plunger is drawn into the solenoid. Near the end of the plunger stroke the recloser mechanism trips.

When the recloser mechanism is sequenced to the delayed operation phase, the speed of plunger movement is restrained by a time-delay unit. The restrained plunger movement provides a fixed time delay before the recloser mechanism trips.

Time Delay Unit
When the mechanism is sequenced to a delayed operation the latch assemblies of the trip solenoid plunger linkages are engaged with the arms on the sealed time-delay units, Figure 4a and 4b. Trip solenoid plunger movement is then restrained by the time-delay unit, which provides a consistent delay action by forcing hydraulic fluid through a calibrated orifice within the unit.

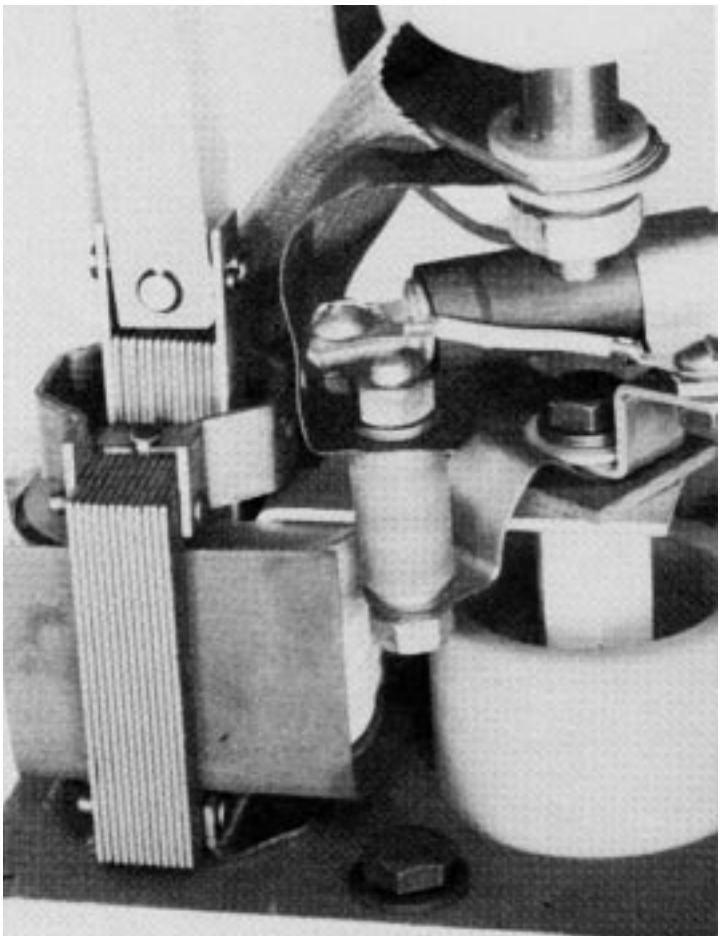

Figure 3.
Series Trip coil. 86825KMA

MECHANISM OPERATION
The operating mechanism, mounted in the head, opens and closes the interrupter contacts. Contact opening is initiated by a series trip solenoid which triggers the trip mechanism to release the loaded opening springs. Contact closing is performed by the closing solenoid which also charges the opening springs and resets the mechanism for the next trip operation. The basic operation of the mechanism is shown in Figure 5.

With the interrupter contacts closed (a), the opening springs are fully extended and the mechanism is in the reset state. When excessive current levels are passing through the series trip coil the solenoid plunger is actuated. The trip solenoid plunger operates the toggle latch, releasing the toggle. This action releases the opening springs (b) which starts the contact bar assembly in motion. The spring-biased reset lever rotates to snap the toggle closed. This action of the reset lever also pulls the plunger out of the closing solenoid. At this point the interrupter contacts are fully open (c) and the mechanism is in the open state. When the closing solenoid plunger reaches the top of its stroke it mechanically closes the closing coil contactor which energizes the closing solenoid. As the plunger is drawn down into the coil the reset lever is pulled back and latched in its original position. The interrupter contacts are closed (d) and the opening springs are extended. The mechanism is now ready for another opening operation.

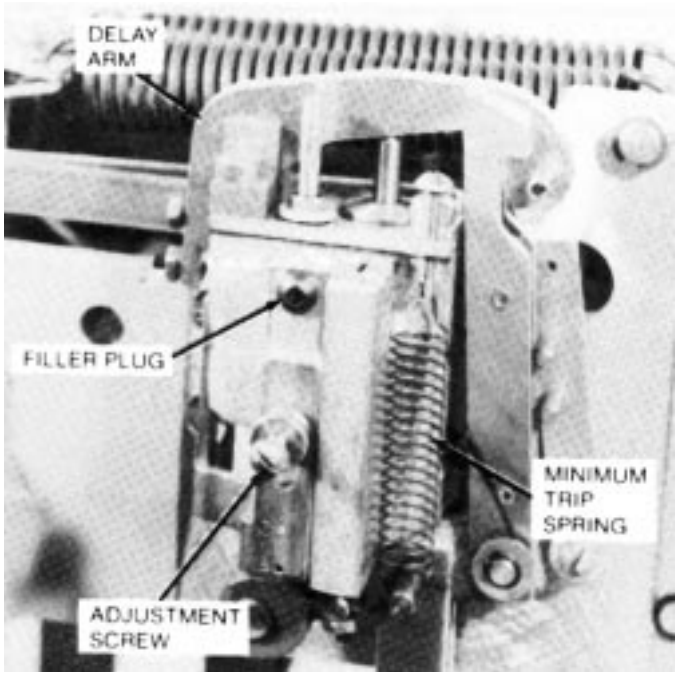

Figure 4a.
Time delay unit (old). 82020KMA

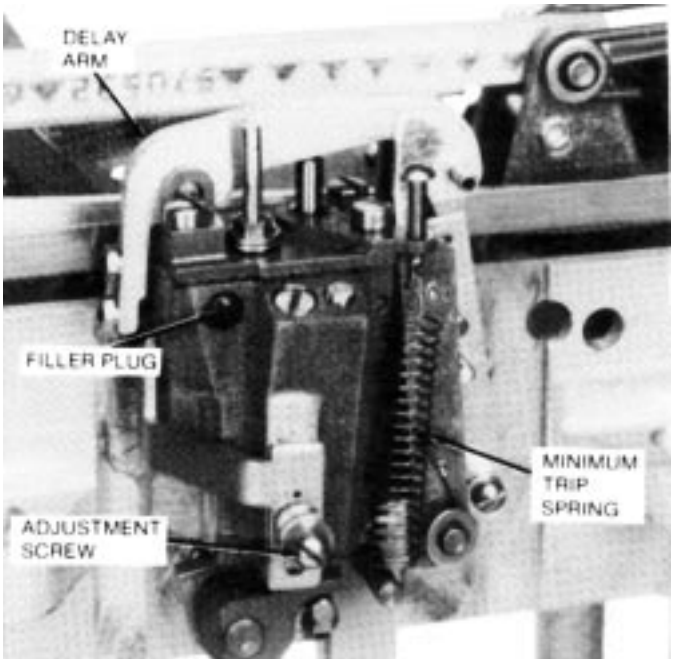

Figure 4b.
Time delay unit (new). 86780KMA

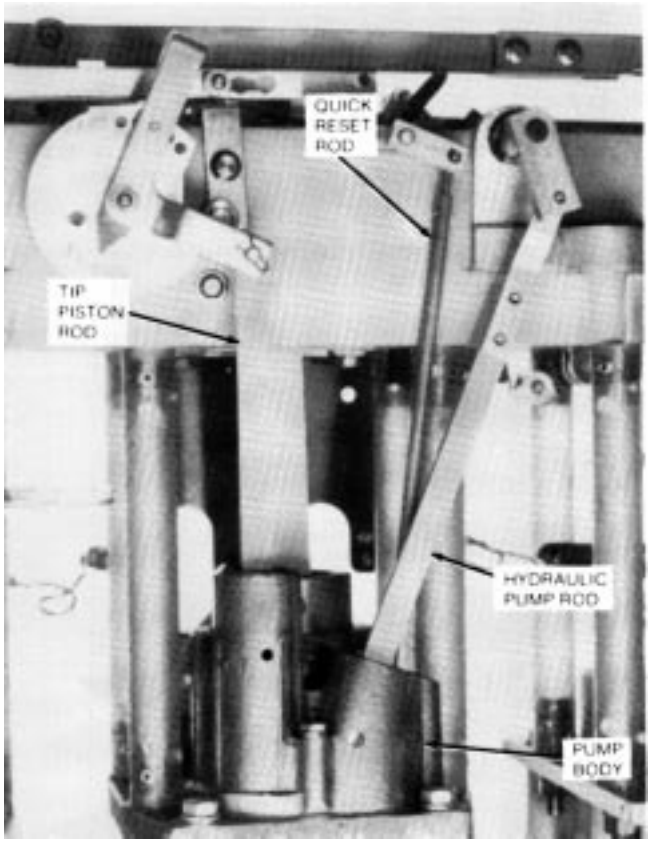

Figure 5.
Head mechanism lever arrangement

HYDRAULIC CONTROL SYSTEM OPERATION

The hydraulic pump, associated cam, and linkages regulate the number of fast and delayed operations, count the operations to lockout, and initiate lockout after a preset number of operations. The hydraulic pump (Figure 6) is linked to the closing-solenoid plunger and is pushed downward with each operation of the plunger. With its downward stroke, the pump forces a measured amount of oil under the lockout piston (Figure7),causing it to rise one step. When the closing coil is energized, the recloser contacts close and the pump returns to its normal position.

The lockout piston is linked to the sequence selector cam and the lockout bar. Upward movement of the lockout piston causes the cam to rotate counterclockwise and the lockout bar to advance one step. The number of fast operations is preset on the cam. After these operations, the cam engages the roller and pushes it to the right. A mechanism arm attached to the roller engages the time-delay mechanism on each phase. Subsequent operations are then delayed.

When the lockout bar completes its travel, it trips the lockout latch. Another set of linkages and springs then lock the recloser contacts open. The quick reset rod is raised, allowing the hydraulic pump and lockout piston assembly to reset quickly. The entire pump and sequencing mechanism is now ready for the next full sequence of operations. For temporary faults that are cleared before the recloser mechanism reaches lockout, the hydraulic pump and lockout piston assembly resettles gradually (at a rate of approximately 90 seconds per operation at 25° C) to reset the recloser mechanism.

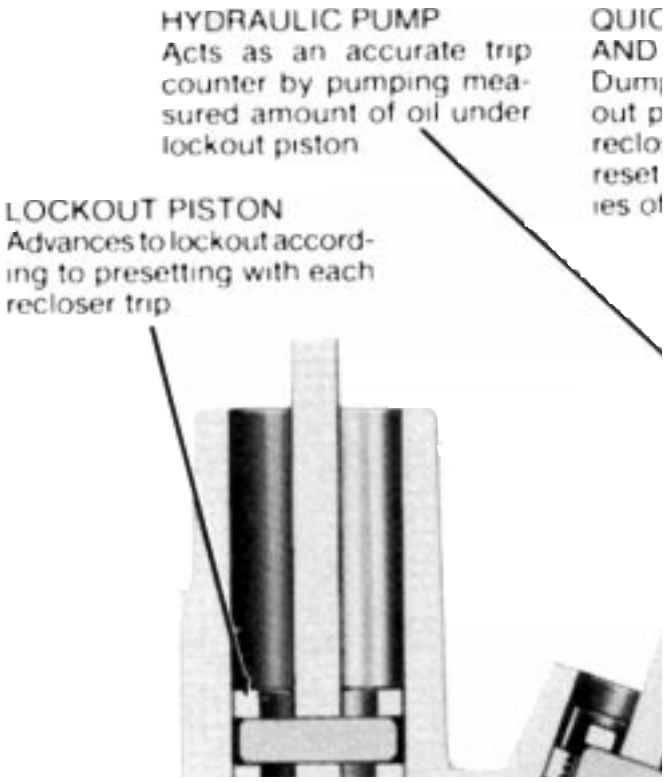

Figure 7.
Hydraulic pump cross section.

86717KMA

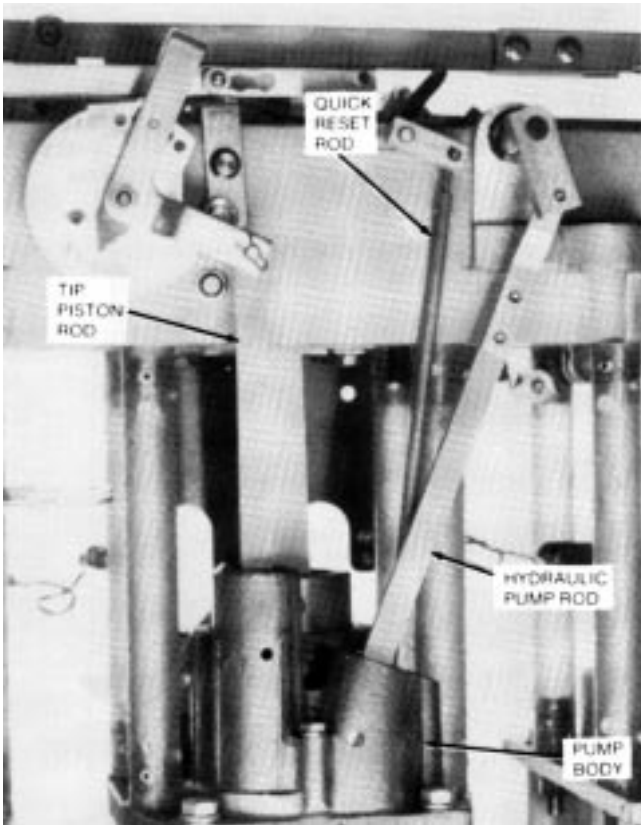

Figure 6.
Hydraulic pump.

86827KMA

Ratings

ELECTRICAL RATINGS

	Type RX	Type W
Nominal system voltage, kv	2.4-14.4	2.4-14.4
Maximum rated voltage, kv	15.5	15.5
Rated impulse withstand voltage (BIL) kv crest	110	110
60-Hertz withstand voltage, kv		
Dry, one minute	50	50
Wet, ten seconds	45	45
Rated maximum continuous current, amps	400	400

DUTY CYCLE

% of Interrupting Rating	Maximum Circuit X/R Value	Number of Unit Operations	
		Type RX	Type W
15-20	3	28	28
45-55	7	24	20
90-100	14	10	10
		Total 62	Total 58

MAINTENANCE

Frequency of Maintenance

Because reclosers are applied under widely varying operating and climatic conditions, maintenance intervals are best determined by the user, based on actual operating experience. To assure proper operation, reclosers must be maintained when they have operated

the equivalent of a complete duty cycle and before the dielectric strength has deteriorated below prescribed levels. In the absence of specific operating experience, the following procedures are recommended.

- When Type RX and W reclosers are operated under usual service conditions as defined in ANSI (American National Standards Institute) C37.60, "Standard Requirements for Automatic Circuit Reclosers for Alternating Current Systems," it is recommended that the following maintenance procedures be performed at the completion of an equivalent duty cycle.
- However, if the recloser has not completed an equivalent duty cycle within *three* years, it is recommended that a Periodic Maintenance Inspection be performed at that time.

Periodic Maintenance Inspection

Each periodic maintenance inspection at the completion of an equivalent duty cycle should include at least the following:

1. Bypass and remove the recloser from service.
2. Thoroughly clean exterior of unit.
3. Inspect external components.
A. Check for broken or cracked bushings. Replace as necessary. (See page 9 for procedure.)
B. Check for paint scratches and other mechanical damage; paint to inhibit corrosion.
C. Note counter reading and enter in the record log.
4. Perform a dielectric withstand test to check the insulation level of the recloser and the vacuum integrity of the interrupters. (See page 8 for procedure.)
5. Manually operate mechanism; operation should match configuration noted on the data plate.
A. Partially untank unit and support head and mechanism assembly with clean wooden blocks.
B. Use manual closing tool to close interrupters.
C. Pull down on strip solenoid trip links until mechanism trips.
NOTE: The force required to pull down the trip-links will be increased when the time delay units are engaged.
D. Repeat steps B and C until lockout has been reached (yellow handle will drop).
6. Untank the recloser to expose the internal components.

CAUTION
Be sure the recloser is open (yellow operating handle under the sleet hood is down) before untanking, so that the mechanism can not be accidently tripped while out of oil.

7. Clean all internal components.
A. Remove all traces of carbon by wiping with a clean, lint-free cloth.
B. Flush the mechanism with clean transformer oil.

CAUTION
Never use volatile solutions, detergents, or water-soluble cleaners.

8. Remove and disassemble bushings, discard old gaskets. Inspect bushing porcelain, rod and hardware for damage. Replace as required.
9. Replace all external seals and gaskets.
10. Inspect mechanism for cracks, carbon traking, flashovers or other damage. Repair or replace as required.
11. Check the condition of the closing solenoid contractor contact tips. If the contact tips are eroded replace entire contactor assembly. (See page 10 for replacement procedure.)
12. Inspect closing coil cracks or other damage.
13. Inspect series trip solenoid.
14. Remove the moving contact assembly from the bottom of the contact lift rod and inspect the erosion of the contact load surfaces.
A. Arcing tips of the moving contacts can experience considerable erosion before replacement is necessary, Slight pitting and discoloration can be dressed with a piece of crocus cloth.
B. However, if one half or more of the contact load surface is worn away the interrupter assembly must be replaced.
C. Figure 8 shows a new contact and a contact that has experienced severe interrupting duty. The used contacts have reached the conditon where the interrupter assembly should be replaced.
15. Reinstall bushings, use new gaskets, (See page 9 for installation procedures.)
16. Drain the tank, and clean out all sludge and carbon deposits. If oil is to be reused it must be filtered and the dielectric strength checked.
17. Fill with new, clean insulating oil up to 2-1/4 inches below the top of the tank flange. Tank capacity is approximately 41 U.S. gallons. See Oil Condition on page 8.
18. Clean the head gasket seat and retank the recloser.
A. Move the yellow operating handle under the sleet hood to the up position to avoid any possible binding while raising the tank.
B. Replace the head bolts and tighten to 35-55 ft-lbs torque. Apply clamping force gradually and equally, in rotation, to each bolt to achieve an evenly distributed gasket sealing pressure.
19. Check the oil level with the dipstick in the head and adjust the level to the upper line on the dipstick.

NOTE: If the recloser is equipped with an oil-sight gage, the oil level should be above the sight gage. if the oil surface line is visible in the window, add oil to raise the level to the upper line on the dipstick.

20. Perform high-potential insulation withstand test (page 8) to make sure the dielectric clearances within the tank have not been compromised. Also, use a suitable tester to verify that the recloser is operating per data plate specifications.

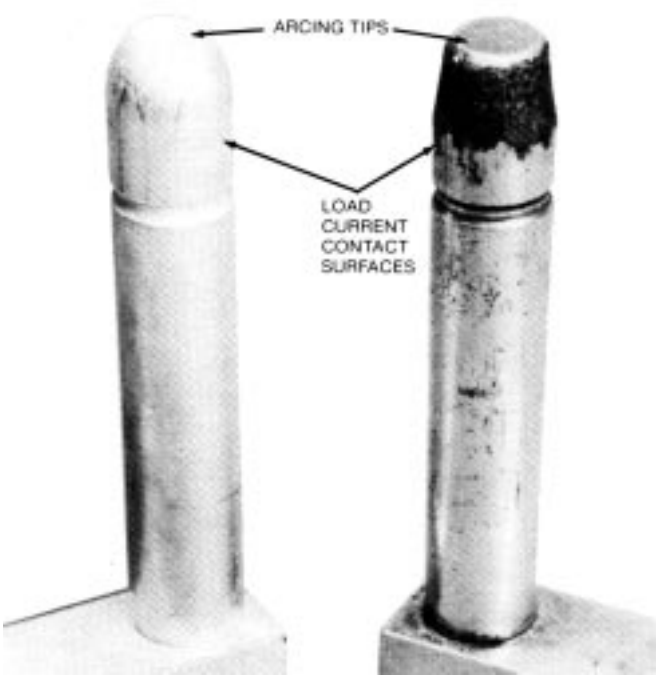

85693KMA

Figure 8.
Left: new moving contact; right: contact after one full duty cycle.

Manual Operation of the Recloser

The recloser may be closed and opened manually while the mechanism is either in or out of oil.

MECHANISM IN OIL

For a tanked recloser (mechanism immersed in oil) use the following manual operating procedure.

1. To close the recloser.

A. Remove the closing tool port cover and gasket from the side of the head casting.

B. Insert the KA90R T-handle closing tool (furnished as an accessory) into the closing tool port (Figure 9) and engage the pin on the closing shaft.

C. Lift up the yellow operating handle under the sleet hood to reset the mechanism.

D. Turn the closing tool one-quarter turn clockwise to close the main contacts.

CAUTION

Never use the KA90R closing tool to close an energized recloser. Forcing the tool beyond the mechanism stop may shear the pin on the closing shaft.

2. To open the recloser.

A. Pull down the yellow operating handle to trip open the recloser.

NOTE: If the mechanism is partially untanked, and properly supported, the recloser can be tripped open by pulling down on the series trip solenoid linkage.

Figure 9.
Manually closing recloser.

82008KMA

MECHANISM OUT OF OIL

To operate the mechanism out of oil, proceed as follows:

1. To close the recloser.

A. If the mechanism is still mounted in the head use the procedure for a tanked recloser above (Mechanism in Oil).

B. If the mechanism is removed from the head turn the trip reset shaft (Figure 10) with a pair of needlenose pliers to reset the mechanism, then turn the closing shaft clockwise with the closing tool to close the main contacts.

CAUTION

The mechanism may be damaged if it is "quick-tripped" with the yellow operating handle while out of oil.

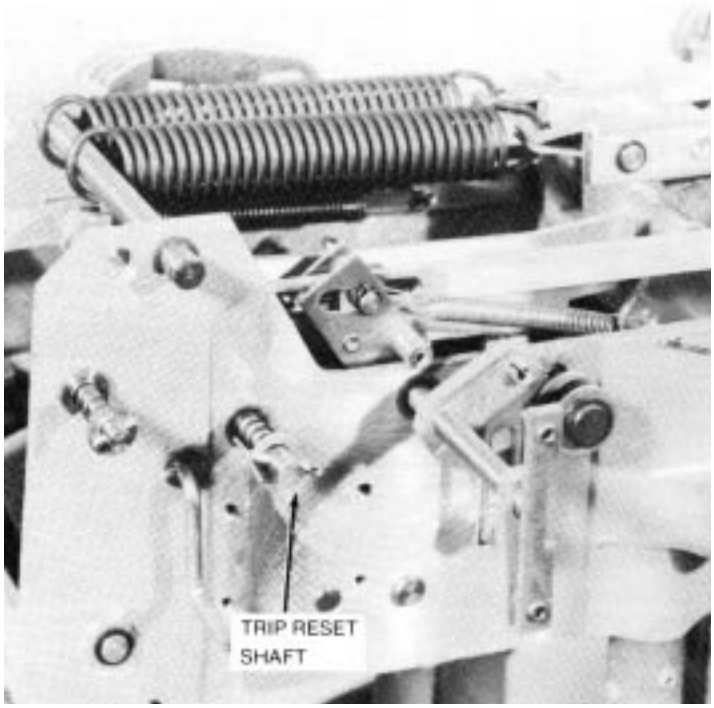

Figure 10.
Resetting trip reset.

84616KMA

2. To open the recloser contacts while the mechanism is out of oil, proceed as follows:

A. Using the T-handle closing tool turn the closing shaft clockwise and hold against the stop.

B. Release the trip lever (Figure 11) by moving it to the right.

C. Then slowly allow the closing tool to rotate counterclockwise to open the main contacts.

NOTE: This procedure requires two people; one to operate the closing tool, the other to operate the trip lever.

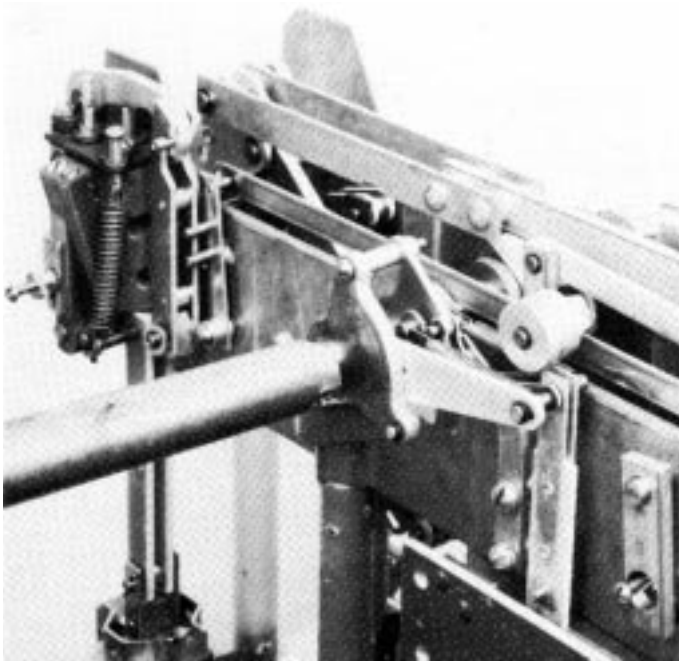

Figure 11. 86793KMA
Trip lever releases mechanism when opening recloser out of oil.

Insolation Level Withstand Tests

High-potential withstand tests provide information on the dielectric condition of the recloser and the vacuum integrity of the interrupters. Testing is performed at 75% of the rated low-frequency withstand voltage (37.5 kv).

TEST 1: Proceed as follows:

1. Manually close main contacts of recloser (see page 7 for procedure).
2. Ground recloser tank and head.
3. Connect all three source-side bushings (1, 3, 5) together.
4. Apply proper test voltage to source-side bushings.
5. The recloser should withstand the test voltage for 60 seconds.

TEST 2: Proceed as follows:

1. Manually close main contacts of the recloser (see page 7 for procedure).
2. Ground recloser tank and head.
3. Ground Phase A (bushing 2) and Phase C (bushing 6).
4. Apply proper test voltage to Phase B (bushing 3).
5. The recloser should withstand the test voltage for 60 seconds.

TEST 3: Proceed as follows:

1. Open main contacts of recloser (see page 7 for procedure).
2. Ground recloser tank and head.
3. Connect and ground all three load-side bushings (2, 4, 6).
4. Connect all three source-side bushings (1, 3, 5).
5. Apply proper test voltage to source-side bushings.
6. The recloser should withstand the test voltage for 60 seconds.
7. Reverse the connections: ground source-side bushings (1, 3, 5); apply test voltage to load-side bushings (2, 4, 6) for 60 seconds.
8. The recloser should withstand the test voltage for 60 seconds.

TEST RESULTS: These high potential withstand tests provide information on the dielectric condition of the recloser and the integrity of the interrupters.

A. If the recloser passes the closed-contacts tests (Tests 1 and 2) but fails the open-contacts test (Test 3) a deterioration of one or more of the interrupters is most likely the cause. Retest each interrupter individually to determine the failed phase or phases, and replace the interrupter(s). Retest to confirm the repair.

B. If the recloser fails the closed-contacts tests (Test 1 and 2) the cause is likely to be a diminished electrical clearance or a failed insulation. After correcting the problem, retest to confirm the repair.

Oil Condition

Oil provides the internal insulation barrier between phases and from phase to ground, and must be replaced before it deteriorates below a safe dielectric level. Replace the oil if its dielectric strength falls below 22 kv.

New oil should always be filtered before use, even though it is obtained from an approved source. Passing the oil through a blotter press will remove free water and solid contaminants such as rust, dirt, and lint. Keep aeration to a minimum during filtering to prevent moisture in the air from condensing in the oil and lowering its dielectric strength.

Used oil must be treated before reusing. Filtering may remove absorbed and free water and other contaminants to raise the dielectric strength to acceptable levels. However, filtering does not always remove water-absorbing contaminants and the dielectric strength may fall rapidly after being returned to service. Therefore the recloser should be filled with new oil, or oil that has been restored to like-new condition. Oil used in these reclosers conforms to ASTM Standard D3487, Type I; its property limits are shown in Reference Data R280-90-1, “Oil Specifications and Tests.”

SHOP MAINTENANCE PROCEDURES

The operations described in this section should be performed under the cleanest conditions possible. The repair work, except for bushing replacement, will be simplified if the work bench is arranged so the mechanism/head assembly can be inverted (bushings down). No special tools are required for any of the repair procedures.

Control Lever Overtravel Adjustment

Check for proper adjustment of the control lever by first removing the sleet hood cover to expose the control lever. From the OPEN position, slowly push the control lever toward the CLOSED position. As the lever is pushed up, latching of the recloser will be felt. At this point the dimension between the top of the control lever and the underside of the sleet hood should be 1/4 inch (Figure 12).

If the control lever is not adjusted properly, remove the C-ring and slide the control lever from the shaft. Rotate the control lever clockwise to reduce the dimension or counterclockwise to increase the dimension. Slide the control lever back onto the shaft and recheck the dimension. When the proper dimension has been obtained replace the C-ring.

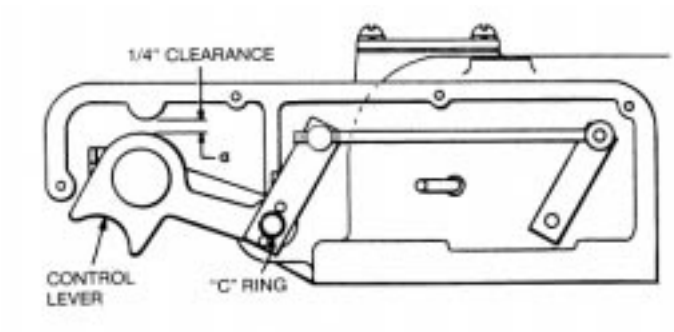

Figure 12.
Overtravel adjustment of control lever.

Bushings

Bushing maintenance generally consists of a thorough cleaning and a careful examination for chips, cracks or other mechanical damage during the periodic maintenance inspection. Bushings must be replaced whenever damage is discovered. Refer to Figure 13 and proceed as follows:

1. Disconnect the bushing lead from the bottom end of the bushing rod.
2. Remove the three hex head capscrews and clamps that secure the bushing to the head and lift out the complete bushing assembly.
3. Remove and discard the lower bushing gasket.

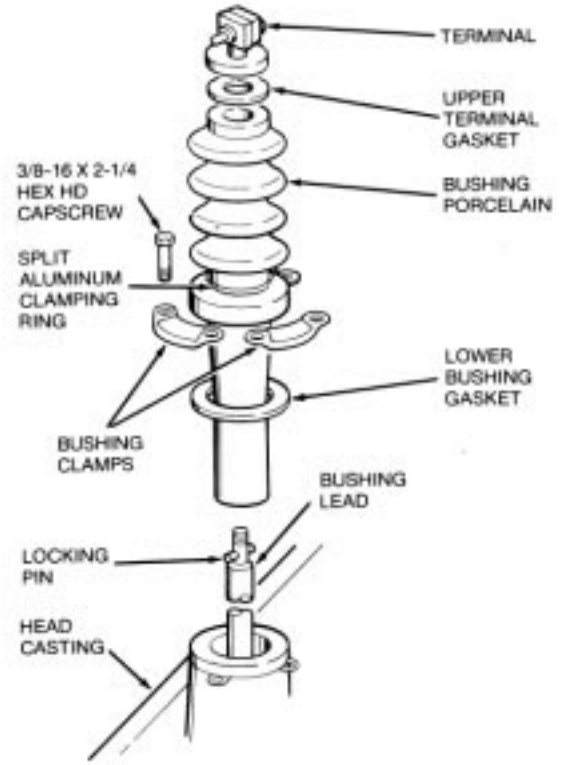

Figure 13.
Replacing bushing with recloser tanked.

4. Depending upon the extent of damage, the complete bush ing assembly can be replaced or new ceramic only can be installed. If new ceramic only is to be installed, refer to Figure 14 and proceed as follows:
A. Unscrew the bushing terminal and withdraw the rod from the bottom of the bushing ceramic; discard the terminal gasket.
B. Insert the rod assembly all the way into the new ceramic, making sure the roll pin is seated in the locking groove in the top of the bushing.
C. Assemble the terminal to the bushing rod using a new terminal gasket; tighten to 35 ft-lbs. of torque.

NOTE: Apply a very small amount of petroleum jelly to the knurled surface of the inside face of the terminal before assembly to the bushing rod.

5. Twist off the split aluminum clamping ring from the old bushing and install on the new bushing if it is in good condi tion; replace the ring if damaged.

NOTE: The clamping ring cushions and distributes the pressure between the ceramic and the clamps. **DO NOT OMIT.**

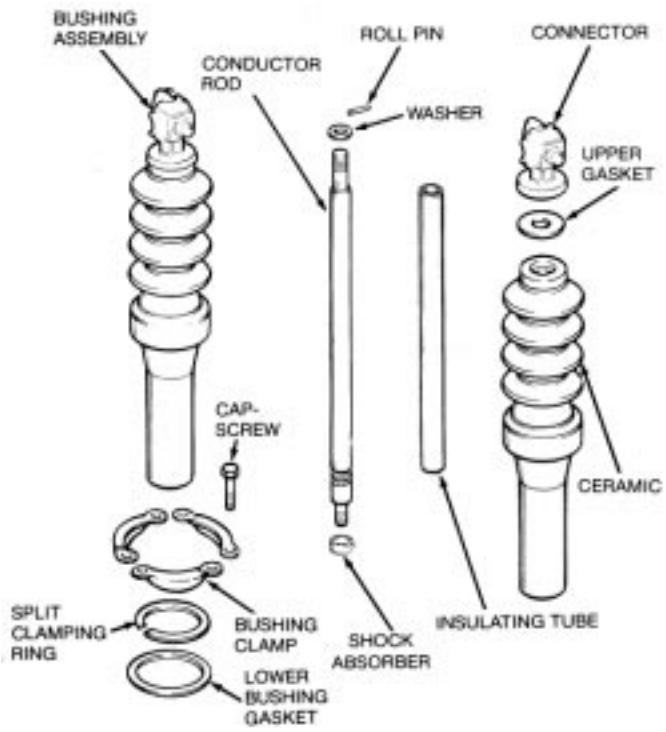

Figure 14.
Bushing parts.

6. Install the bushing assembly (new or reworked) into the head using a new lower bushing gasket. Position the bushing with the stud end of the terminal pointing outward.
7. Position the clamping ring with the split centered between two clamping bolts.
8. Reassemble the bushing to the head casting. Tighten the bolts evenly, a little at a time, to a torque of 10-15 ft-lbs.

NOTE: Clamping forces must be applied gradually and equally in rotation to each bolt. This results in an evenly distributed gasket sealing pressure.

9. Reconnect the lead to the bushing rod.

Interrupter Assembly

1. Using a 1/2-inch thin wall socket, remove the vibration-proof hex nut that secures the contact yoke to the lift rod. Gently tap contact arm to remove contacts from the lift rod.
2. Remove the terminal bolt from the top of each stationary contact assembly.
3. Remove hex nuts, flat washers, and lock washers that secure the interrupter assembly to the stringers.
4. Slide the arc interrupter assembly (Figure 15) off.

NOTE: The arc interrupter and contact assembly and the moving contact assembly are both replaced as assemblies. They should both be replaced at the same time.

5. Place the replacement interrupter assembly into position and secure it with original hardware.
6. Install the terminal bolts into each stationary contact assembly.
7. Place the movable contact assembly onto the lift rod and install a new vibration-proof hex nut.

NOTE: It is recommended that vibration-proof nuts not be reused.

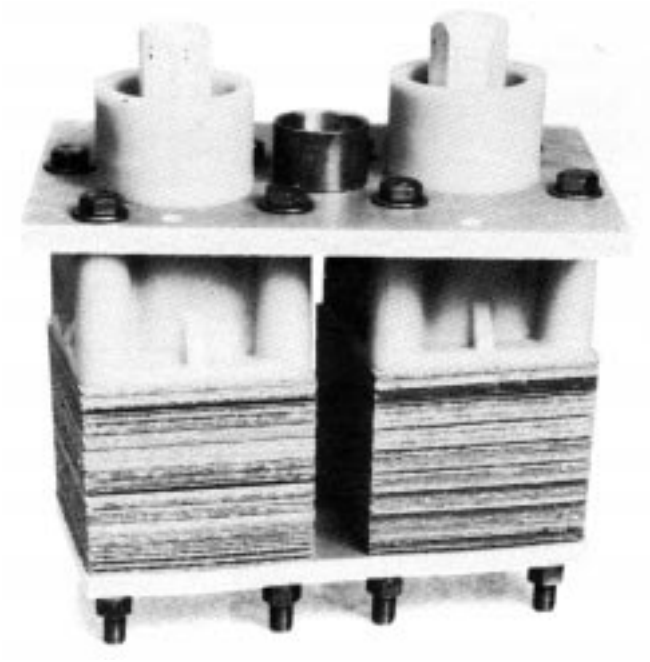

85695KMA

Figure 15.
Assembled interrupter and stationary contacts, type RX.

Closing Solenoid Contactor

If the contacts are badly burned or eroded, the entire contactor must be replaced. See Figure 16 and proceed as follows:

1. Unhook the two toggle springs from the pin that connects the operating shaft of the contactor to the toggle arm.

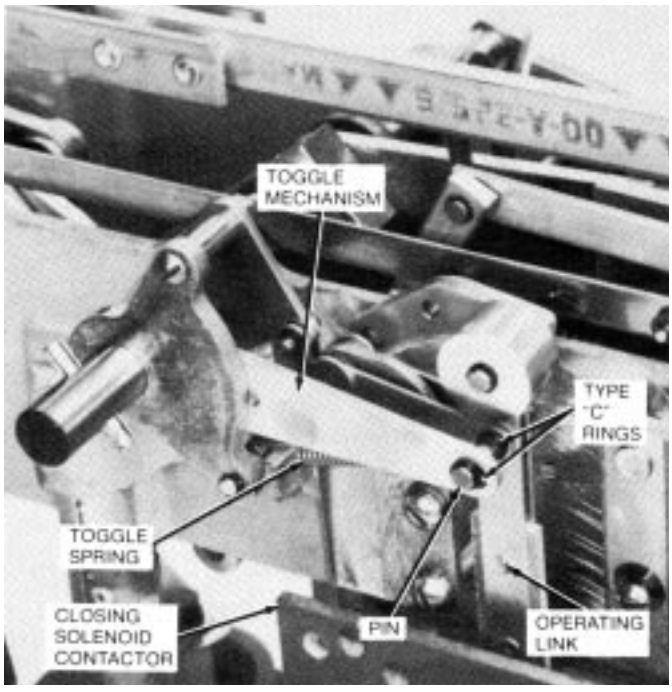

Figure 16.
Replacing closing coil contactor

86824KMA

2. Remove the C-type retaining rings and withdraw pin.
3. Disconnect the two coil leads from the contactor.

NOTE: Reattach the lockwasher and hex nut to the contactor terminal immediately after disconnecting the coil lead to prevent loss of moving contact parts which are attached to the support plate with the same hardware.

4. Disconnect the two fuse leads from the contactor.
5. Remove three hex head capscrews and lockwasher that attach the contactor to the underside of the recloser mechanism frame and remove contactor.
6. Install new contactor by reversing the disassembly procedure. Use new C-rings to secure the toggle-link pin.
7. Connect solenoid coil leads to lower terminals.
8. Connect fuse leads to upper terminals.
NOTE: Be sure coil and fuse leads are positioned for maximum clear ance to grounded parts.

Closing Solenoid

The closing solenoid coil is connected phase-to-phase and is rated to operate at full system voltage. It is protected with two fuses, one on either side. A data plate attached to the recloser head between source side bushings 3 and 5 provides the coil connection information.

If the solenoid coil must be replaced, due to damage or change in operating voltage, refer to Figure 17 and proceed as follows:

1. Disconnect the two coil leads from closing solenoid contactor.

NOTE: Reattach the lockwashers and nut to the contactor terminal immediately after disconnecting the coil lead to prevent loss of parts of the moving contact arm assembly which is attached to the support plate with the same hardware.

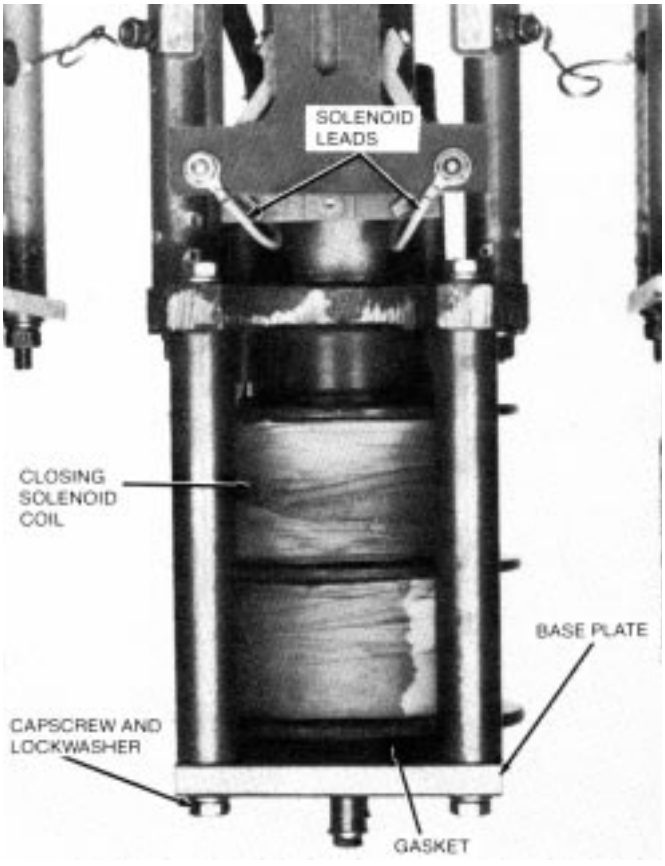

Figure 17
Replacing closing solenoid.

86828KMA

2. Remove four capscrews and lockwashers which attach base plate to bottom of solenoid frame posts and lower coil and base plate.
3. Remove coil from the base plate and discard coil gasket.
4. Using a new coil gasket, install new closing coil on the base plate.

NOTE: A new coil gasket is included in the closing coil replacement kit.

5. Reassemble base plate to solenoid frame posts and connect coil leads to the contactor terminals. Make sure the coil leads clear the solenoid frame by at least 1/2-inch.
6. The closing coil replacement kit includes two new coil fuses which should be installed with the new coil.
7. The closing coil replacement kit also includes a new voltage date plate. Replace the plate on the sleet hood of the recloser head if the operating voltage of the recloser is being changed.

SERIES TRIP SOLENOID

The continuous current rating and the trip current rating of the recloser can be changed by installing new coils in the series trip solenoids. Tripping occurs at about 200% of the continuous current rating of the standard coil and at about 140% when the alternate (400X or 560X) coils are used. The maximum interrupting rating of the recloser is dependent upon the continuous current rating of the series trip coil.

Two different coil replacement kits are required. One for Phase A and Phase B solenoids and another for Phase C (the interrupter furthest away from the sleet hood) which has an opposite wind because it mounts differently on the interrupter. The same basic replacement procedure is used for either type coil.

Solenoid Disassembly

1. Remove cotter pin; slide out groove pin that connects the insulated operating links to the solenoid plunger (Figure 18).
2. Remove bolt that fastens outer coil terminal and bushing lead.

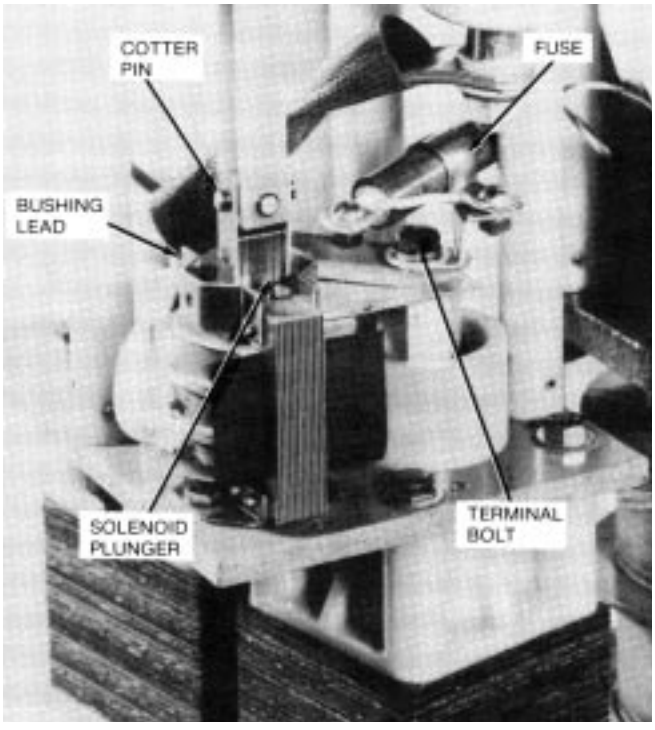

Figure 18. 85622KMA
Replacing series trip coil.

3. Remove capscrew that connects the inner coil terminal strap to the interrupter current interchange.
4. Remove elastic stop nut and flat washer that secure solenoid frame to the upper current exchange mounting board. Lift entire solenoid assembly off board.
5. Remove solenoid plunger, guide clips, guide channels and upper coil washer.
6. Lift coil slightly and pull out of solenoid frame.
7. Replace any damaged parts at this time.

Solenoid Replacement

Check lower coil washer before installing new coils. For coils rated 280 amperes and below the upper and lower coil washers are identical. For 400 and 560 ampere rated coils, the upper washer requires a larger center slot. The same lower washer is used with all coil sizes.

1. Pass upper insulating washer over terminal strap and align its slot with the coil slot (Figure 19).
2. Insert coil into the frame and slide the upper coil washer into position.
3. Replace in order the guide channels, guide clips and plunger.
4. Place the solenoid assembly back on the mounting board and secure it with the flat washers and elastic stop nuts.
5. Connect operating links to the solenoid plunger with the groove pin, spacer and cotter pin.
6. Connect the coil terminals to the current interchange and the bushing lead to complete the assembly.

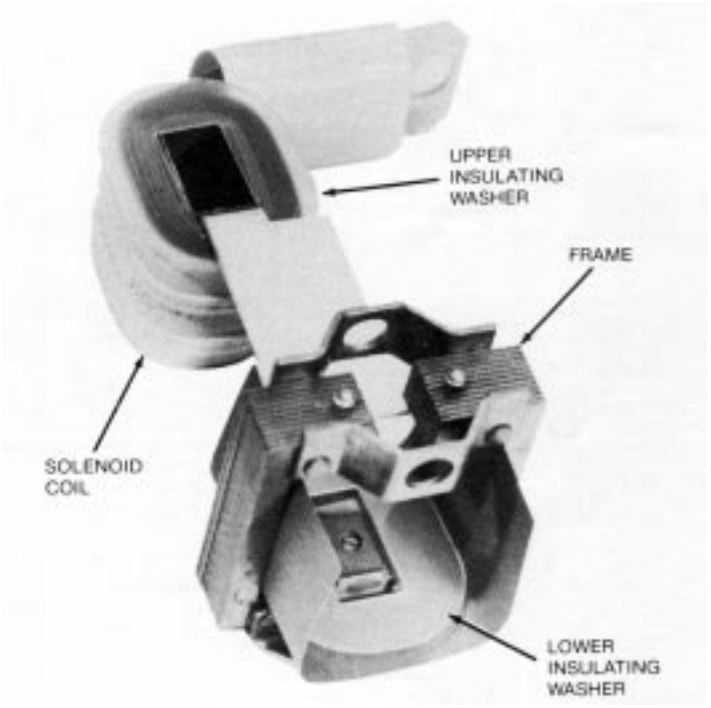

Figure 19. 82023KMA
Assembling solenoid series trip coil.

TIME DELAY UNIT

The recloser is equipped with hydraulically-operated time delay units on each phase. These provide the different time-current characteristic (TCC) curves, as shown in Reference Data R28091-6. Each unit can provide either of two-time delay characteristic curves, but not all four (KA1 194R1 provides B and C curves and KA1194R2 provides D and E curves).

When the mechanism is sequenced to the delayed operation phase, the latch assembly of the trip-coil plunger linkage is engaged with the arm of the time-delay unit, this provides consistent delay action by forcing hydraulic fluid through an orifice in the unit. Special aircraft-type fluid is used to minimize temperature effects.

Maintenance

Maintenance to the time delay units is limited to checking the fluid level in the units. Some loss of fluid is normal, therefore this inspection should be made each time periodic maintenance is performed.

To check the fluid level, remove the socket-head filler plug located on the side of the unit. Add enough fluid to bring the level up to the filler plug hole. Avoid introducing dirt, lint or any other foreign material when filling the unit as this can plug the orifice and cause erratic time-delay action.

NOTE: A special fluid replacement kit, catalog number KA806R2, is available. The kit consists of approximately 60 cc (2 US fl. oz.) of the special hydraulic fluid in an eye-dropper bottle.

Replacement

Replacement time-delay kits include a factory calibrated time-delay, four flat head screws and a minimum-trip calibration spring. Remove the malfunctioning unit and install the replacement in its place (see Figure 20).

The minimum trip setting of the recloser must be recalibrated by adjusting the spring tension whenever a new time-delay unit is installed.

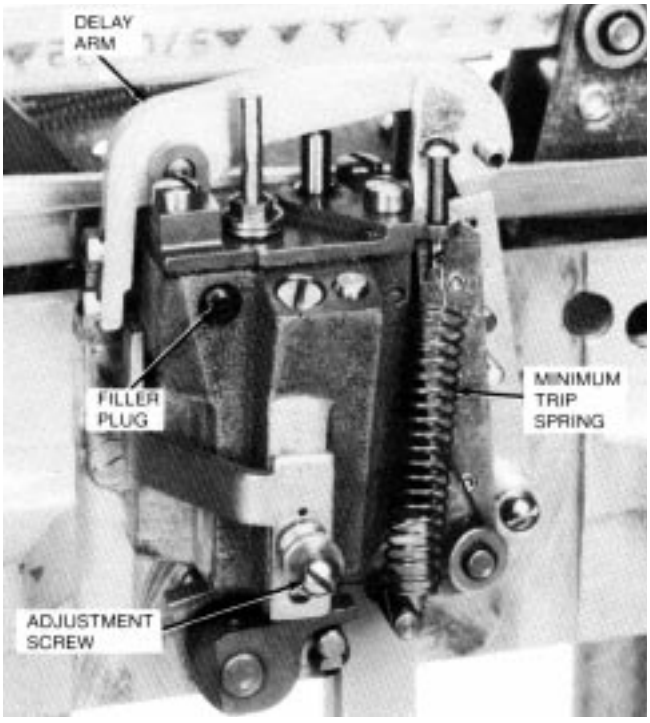

Figure 20. 86780KMA
Series trip solenoid removal.

Removing Mechanism from Head

To gain access to components located in or on the main frame, the following procedure may be used to remove the mechanism from the head.

NOTE: These procedures will be simplified if the untanked head and mechanism assembly can be inverted (bushings down) The unit can be supported on its bushings.

1. Disconnect all six bushing leads from the ends of the bushings.
2. Disconnect the lockout lever and contact position indicator shafts by disengaging the spring loaded couplers and locking them in the disengaged position, Figure 21.
3. Disconnect any accessories, such as a ground trip solenoid, at their terminals.

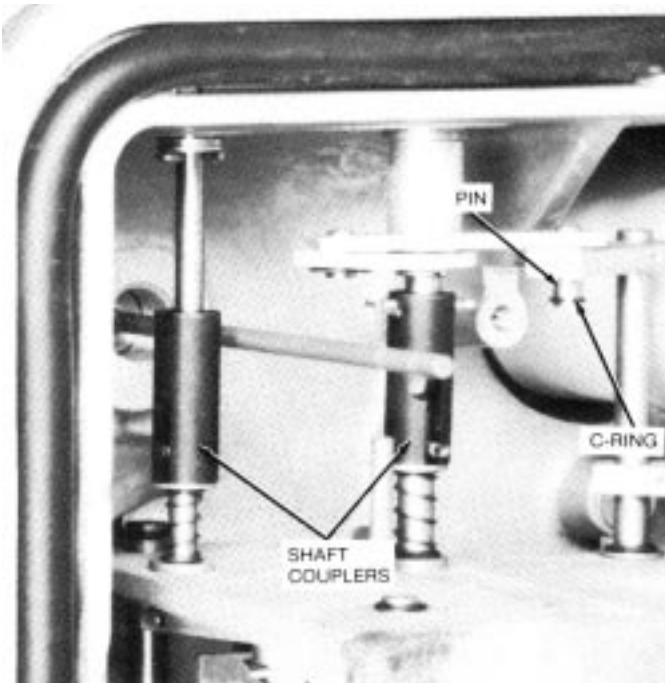

Figure 21. 86830KMA
Disconnect couplers.

4. If the recloser is equipped with the auxiliary switch accessory, remove the C or E-ring and washer, Figure 22, and disconnect the operating lever of the switch from the recloser mechanism.

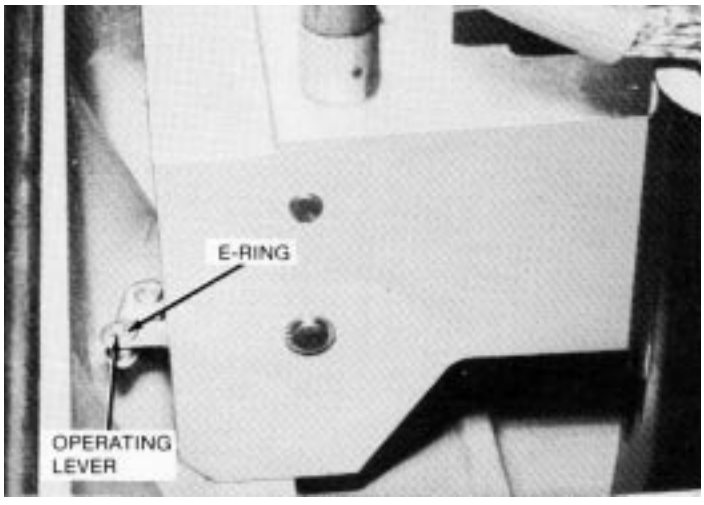

Figure 22. 83375KMA
Remove E-ring to disconnect auxiliary operating lever.

5. Remove the six socket head bolts and lockwashers that secure the frame to the head casting and carefully lift the mechanism from the head. Six long pipe spacers will be released when the mechanism is lifted.

   NOTE: By temporarily substituting eye-bolts for two of the hex head bolts in the bottom of the closing solenoid frame, the mechanism can be easily lifted and handled with a hoist (Figure 23).

6. Remove couplers from contact position indicator and lockout lever shafts.

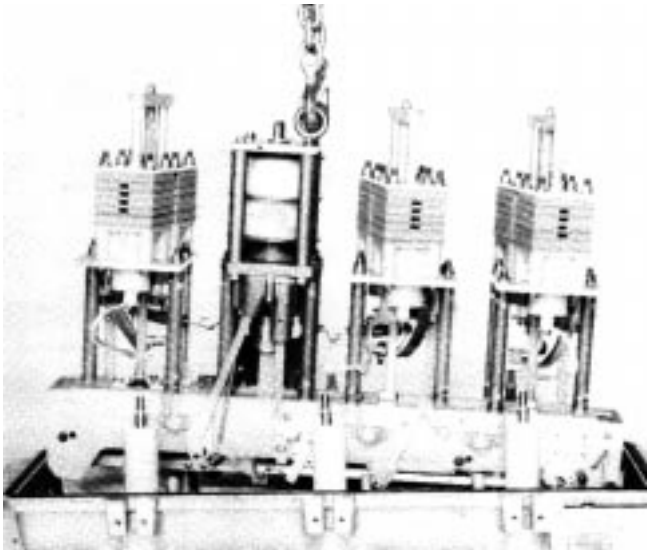

86780KMA

Figure 23.
Lifting mechansim in and out of the head.

Reinstalling Mechanism into Head

To reinstall the recloser mechanism assembly into the head, the following procedure may be used.

1. Install the couplers on the lockout lever and contact position indicator shafts. Lock them in the disengaged position.

2. Carefully lower the mechanism assembly onto the six pipe spacers which have been positioned over the mounting holes in the casting.

3. Install the six socket head bolts and tighten evenly to avoid any binding of the mechanism.

   NOTE: Replace the hex head bolts in the bottom of the closing solenoid frame if eye-bolts were used for handling the recloser mechanism (Figure 23).

4. Re-engage the lockout lever and contact position indicator shaft by releasing the shaft couplers.
5. Reconnect the operating lever of the auxiliary switch (if used) the mechanism and secure with the washer and E-ring (Figure 22).
6. Reconnect the bushing leads to the end of the bushings.

TESTING

Procedures for testing the Type RX and W reclosers are included in the Installation Manual S280-30-1.

SERVICE PARTS LIST

The service parts and hardware listed and illustrated include only those parts and assemblies usually furnished for repair or involved in the maintenance procedures described in this manual. Further breakdown of listed assemblies is not recommended.

Dimensions of all common hardware parts have been carefully checked so that they may be locally acquired. The suffix letter of the 14 character catalog number for common hardware parts codes the plating of the part:

A - No plating; raw material
H - Silver
M- Black oxide
Q - Cadmium + zinc + chromate
Y - Zinc + chromate
Z - Electro zinc + bronze irridite

A hardware kit, Catalog No. KA849R1, contains an assortment of roll pins, cotter pins, retaining rings, stop nuts, etc.—common hardware parts used in Cooper Power System reclosers that may not be readily locally available.

To assure correct receipt of any parts order, always include recloser type and serial number. Because of Cooper Power Systems' continuous improvement policy, there may be instances where the parts furnished may not look exactly the same as the parts ordered. However, they will be completely interchangeable without any rework of the recloser.

All parts carry the same warranty as any whole item of switchgear, i.e. against defects in material or workmanship within a period of one year from date of shipment.

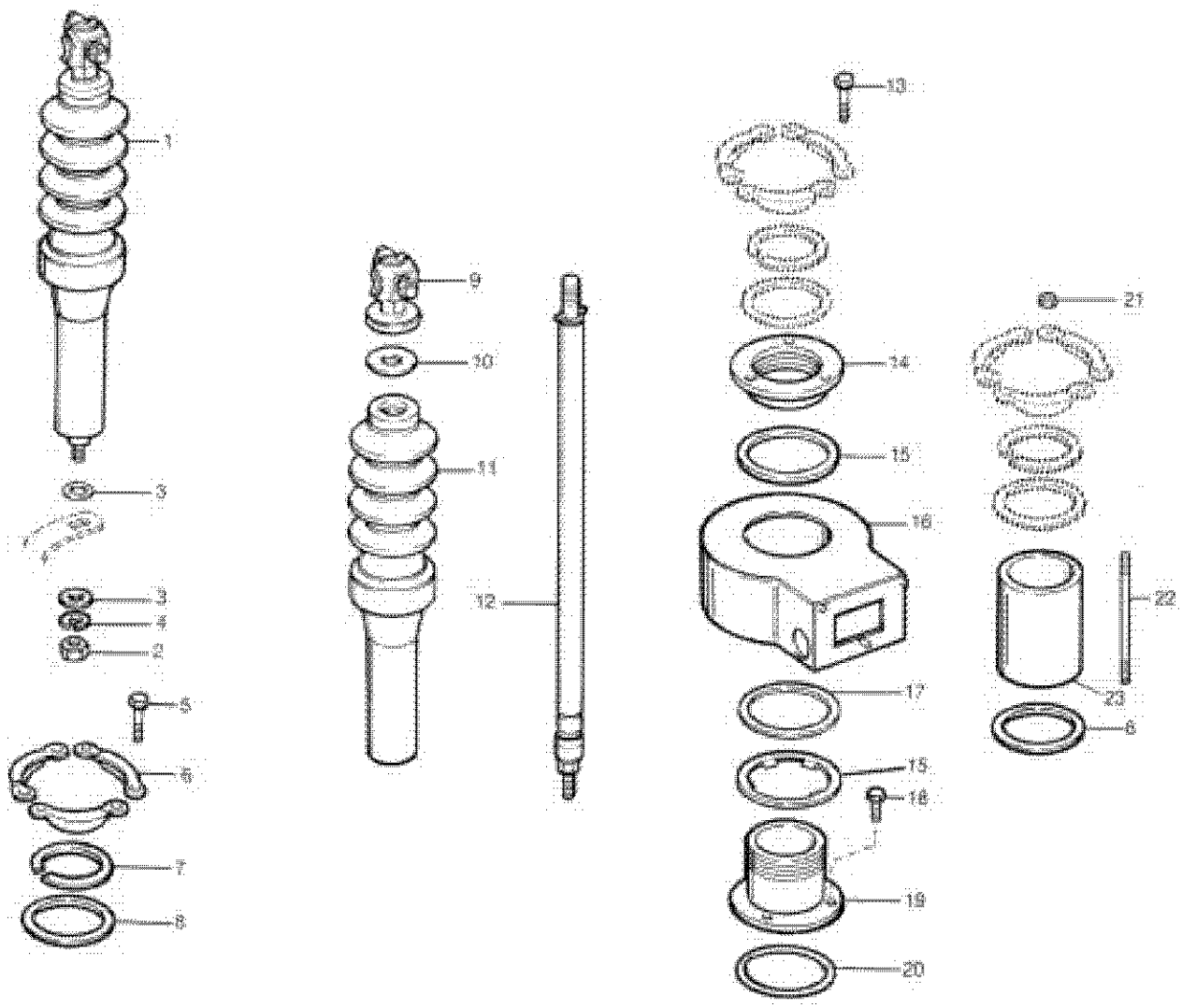

Figure 24.
Bushing Parts.

Bushing Parts (Figure 24)

Item No.	Description	Catalog Number	Oty. per Assy.
1	Bushing Assembly—Type RX (consists of items 9 through 12)		
	11-5/8-inch standard creepage	KA717R1	6
	11-5/8-inch standard creepage with BCT accy.	KA717R2	6
	17-inch extra-creepage	KA717R3	6
	17-inch extra-creepage with BCT accy.	KA717R4	6
	Bushing Assembly—Type W (consists of items 9 through 12)		
	11-5/8-inch standard creepage	KA717R25	6
	11-5/8-inch standard creepage with BCT accy.	KA717R26	6
	17-inch extra-creepage	KA717R27	6
	17-inch extra-creepage with BCT accy.	KA717R28	6
2	Hex jam nut, 1/2-20, brass	K880725320050H	12
3	Flat washer	KP2028A903	12
4	Split lockwasher, med. 1/2 bronze	K900830050000A	6
5	Capscrew, hex hd, 3/8-16 x 2-1 /4, stl.	K730101137225Q	18
6	Bushing clamp	KP1109R	18
7	Clamping ring	KP1111R	6
8	Lower bushing gasket	KP2090A66	6
9	Terminal Assembly—Type RX	KA143L900	1
	—Type W	KA17W901	1
10	Upper bushing gasket	KP2090A57	1
11	Bushing ceramic—Type RX		
	Standard creepage	KP1110R	1
	Standard creepage with BCT accy.	KP171W	1
	17-inch extra-creepage	KP1578R	1
	17-inch extra-creepage with BCT accy.	KP186W	1
	Bushing ceramic—Type W		
	Standard creepage	KP1110R	1
	Standard creepage with BCT accy.	KP171 W	1
	17-inch extra-creepage	KP1578R	1
	17-inch extra-creepage with BCT accy.	KP186W	1

Item No.	Description	Catalog Number	Qty. per Assy.
12	Bushing rod assembly—Type RX		
	Standard and 17-inch creepage	KA716R7	1
	Standard and 17-inch creepage with BCT accy.	KA716R11	1
	Bushing rod assembly—Type W		
	Standard and 17-inch creepage	KA716R20	1
	Standard and 17-inch creepage with BCT accy.	KA716R21	1
The following parts are applicable to the bushing current transformer accessory. Quantities shown for one current transformer.			
13	Capscrew, hex hd, 3/8-16 x 1-7/8, stl.	K730101137187Q	3
14	Transformer clamping flange	KP170W1	1
15	Flange gasket	KP2090A73	2
16	Replacement current transformer		
	600:5 multi-ratio	KA159W1S	1
	1200:5 multi-ratio	KA132W	1
17	CT washer, used with plastic housing CT's	KP312W	1
18	Capscrew, hex hd, 3/8-16 x 1 stl.	K730101137100Q	3
19	Transformer clamping sleeve	KP169W1	1
20	O-ring gasket, used with transformer clamping sleeve that has machined groove. Old style clamping sleeve, without groove, use KP2090A66.	KP2000A64	1
21	Hex nut, 3/8-16, stl	K880201116037Q	3
22	Stud	K P3149A40	1
23	Bushing spacer	KP275W	1

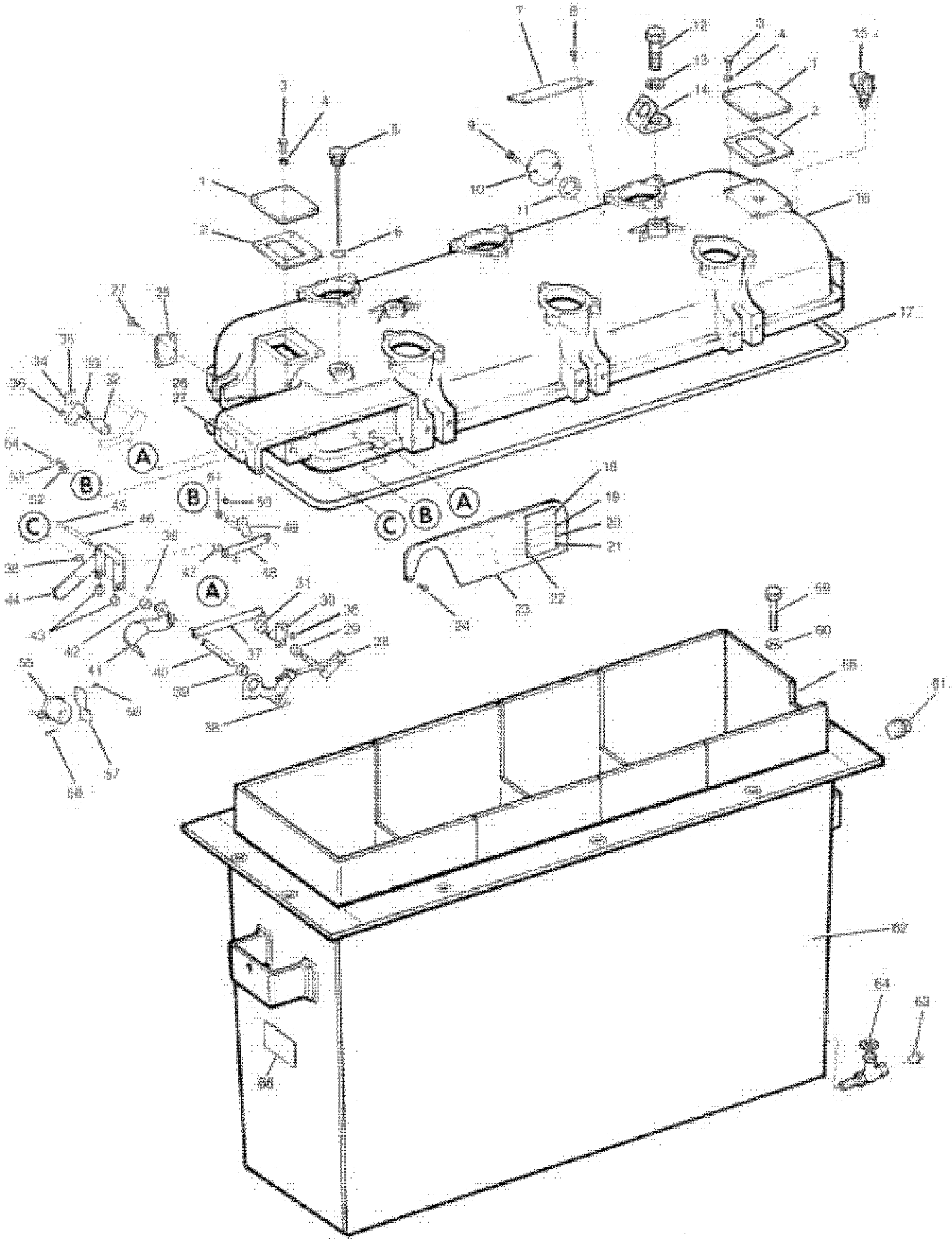

Figure 25.
Head and tank assemblies.

Head and Tank Assemblies (Figure 25)

Item No.	Description	Catalog Number	Ouan. Req'd.
1	Cover plate	KP609R	2
2	Gasket	KP611R	2
3	Capscrew hex hd,1/4-20 x 3/4, stl	K730101125075Q	8
4	Split lockwasher, med, 1/4, stl	K900801025000Z	8
5	Dipstick	KA363R	1
6	O-ring gasket	KP2000A9	1
7	Closing coil instruction plate	KP2312R	1
8	Self-tapping screw, Type F, #2 x 3/16, sst	K751515102018A	2
9	Capscrew, hex hd,1/4-20 x 5/8, stl	K730101125062Q	2
10	Manual closing tool access cover plate	KP246R1	1
11	Cover plate gasket	KP2000A12	1
12	Capscrew, hex hd, 5/8-11 x 1-1/2, stl	K730101162150Q	2
13	Split lockwasher, med,5/8, stl	K900801062000Z	2
14	Lifting lug	KP456H2	2
15	Ground connector	KA392R	1
16	Head casting includes control shaft bushings	KA840R	1
17	Head gasket	KP2103A8	1
18	Nameplate		
	Type RX	KP1RX	1
	Type W	KP228W	1
19	Voltage data plate	KP567R	1
20	Coil data plate	KP2119A9	1
21	Operating data plate	KP1371R	1
22	Self-tapping screw, Type Z, #4 x 3/16, sst	K801515004018A	8
23	Sleet hood cover plate	K283R	1
24	Thread cutting screw, Type T #12 x 1/2. sst	K781515112050A	5
25	Contact indicator plate	KP1067R	1
26	Handle designation plate	KP390R	1
27	Self-tapping screw, Type F, 2-56 x 3/16, sst	K751515102018A	4
28	Manual operating handle assembly	KA477R	1
29	Spacer	KP3009A39	1
30	Lever and split shaft assembly	KA313R	1
31	Spacer	KP3011 A5	1
32	Spacer	KP3011 A7	1

Item No.	Description	Catalog Number	Quan. Req'd.
33	Lever and split shaft assembly	KA312R	1
34	Retaining ring, Type C,5/16. sti, WA516	K970901312000M	1
35	Roll pin 1/8 x 3/4	K970801125075C	1
36	Retaining ring, Type C,1/4, stl, WA514	K970801250000M	2
37	One shot link and pin assembly	KA505R	1
38	Retaining ring, Type C,3/8, stl, WA518	K970801375000M	2
39	Spacer	KP3013A91	1
40	Groove pin	KP3126A4	1
41	One shot handle assembly	KA504R	1
42	Spacer	KP3010A5	1
43	Spacer	KP3013A38	2
44	Indicator and support assembly	KA317R	1
45	Retaining ring, Type C,3/16 stl, WA510	K970915188000A	3
46	Groove Pin	KP3123A12	1
47	Spacer	K3006A9	1
48	Link	KP1059R	1
49	Shaft and lever assembly	KA319R	1
50	Pin	KP3190A11	1
51	Spacer	KP3007A8	1
52	Flatwasher, #14S, brass	K900525026056A	1
53	Cotter pin,3/32 x1/2, stl	K970801093050A	1
54	Roll pin,3/32 X 1/2, stl	K970801093050C	1
55	Counter	KA28C0A2	1
56	Self-tapping screw, Type F 6-32 x 3/8, sst '	K751515106037A	2
57	Bracket	KP1598R	1
58	Self-tapping screw, Type Z, #10 x 3/8, sst	K801515010037A	2
59	Capscrew, hex hd,1/2-13 x 3-1/4, stl	K730101150325Q	10
60	Flatwasher	KP2028A23	10
61	Pipe plug, 1", sq hd	KP2007A4	1
62	Tank	KA88W	1
63	Pipe plug, 1/2", sq hd	KP2007A3	1
64	Oil sampling and drain valve assy.	KA809R	1
65	Tank liner kit	KA867R	1
66	Tank data plate	KP200W	1

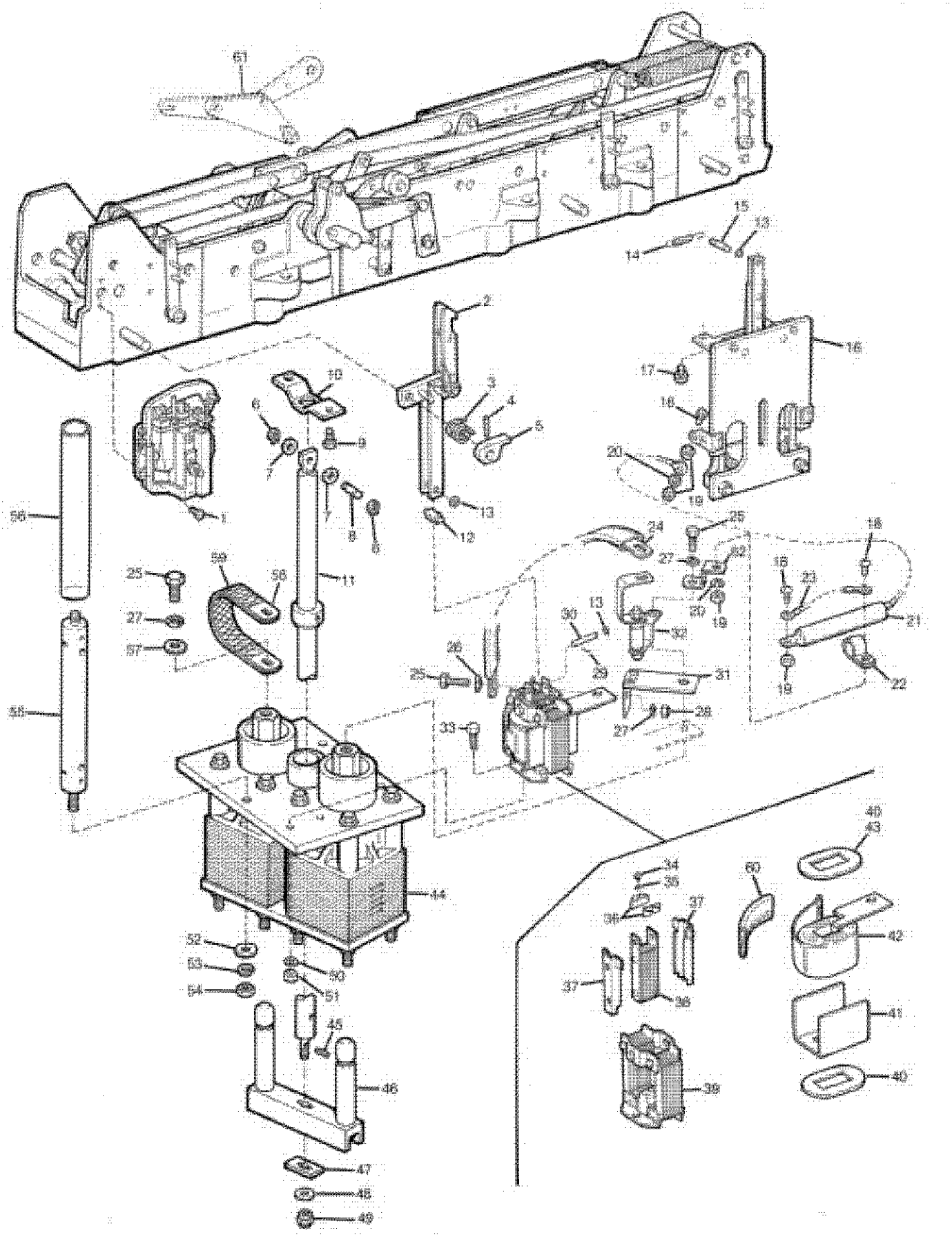

Figure 26.
Trip coil and interrupter mechanisms.

Trip Coil and Interrrupter Mechanisms(Figure 26)

Item No.	Description	Catalog Number	Quan Req'd
1	Time-delay unit replacement kit, complete (includes attaching screws)		
	For B and C curves	KA1194R1	3
	For D and E curves	KA1194R2	3
2	Trip link assembly, complete	KA161R	3
3	Torsion spring	KP576R	3
4	Roll pin, 1/8 X 3/4, stl	K970801125075M	3
5	Trip lever stop	KP577R	3
6	Retaining ring Type C, 5/16 . stl, WA516	K970901312000M	6
7	Flat washer, 5/16, AN, stl	K900201032056Z	6
8	Groove pin	KP3125A2	3
9	Capscrew with lockwasher, 1/4-20 x 1/2. stl	K830101125050A	6
10	Contact rod guide		
	Type RX	KP346W1	3
	Type W	KP346W2	3
11	Moving contact rod assembly		
	Type RX, phases A & B	KA44RV2	2
	Type RX, phase C	KA44RV1	1
	Type W, phases A & B		
	Below Serial No. 8894	KA29WV1	2
	Serial No. 8900 and above	KA165W2	2
	Type WV, phase C		
	Below Serial No. 8894	KA29WV1	1
	Serial No. 8900 and above	KA165W1	1
12	Pin	KP517RV	3
13	Retaining ring, Type C,1/4, stl, WA514	K970901250000A	13
14	Contactor toggle spring	KP141R1	2
15	Groove pin	KP1306R	1
16	Closing solenoid contactor	KA430R1	1
17	Capscrew, hex hd, with lock washer, 1/4-20 x 1/2, stl	K8830101125050A	3
18	Machine screw, rd hd 1/4-20 x 1/2, brass	K721525125050A	7
19	Hex nut, 1/4-20 brass	K881025120025A	6
20	Split lockwasher, med, 1/4, brz	K900830025000A	7
21	Closing coil fuse assembly (also included in closing coil replacement kit, item 36, Figure 27)		2
	2.4-3.3 kv (2 red color bands)	KA259R904	
	4.15-6 kv (black color band)	KA259R901	
	7.2-11 kv (yellow color band)	KA259R902	
	12-14.4 kv (red color band)	KA259R903	
22	Clamp	KP2006A16	2
23	Wire lead	KA28W1	2
24	Lead		
	RX	KP3250A1	12
	W	KP3250A1	18
25	Hex bolt, 3/8-24 X 7/8, silicon brz	K700133337087A	3
26	Washer, 3/8. brass	K900525039087H	3
27	Lockwasher, 3/8. brz	K900830037000A	9
28	Hex nut, 3/8-24, brass	K880725324037H	3
29	Cotter pin, 1/46 X 1/2. stl	K970501062050A	3
30	Pin	KP3114A1	3
31	Bracket	KP2576	2
32	Coil gap (used only on coils below 100 amp)		
	Phases A & B	KP13RV2	2
	Phase C	KP13RV1	1

Item No.	Description	Catalog Number	Quan. Req'd.
33	Capscrew, hex hd, 1/4-20 x 7/8. stl	K730101125087A	6
34	Self-tapping screw, rd hd, Type F, #2 x 5/16. stl	K751501102031A	6
35	Eyelet	KP1351R	6
36	Plunger guide	KP622R	6
37	Plunger guide	KP312R	6
38	Plunger assembly	KA604R	3
39	Solenoid frame assembly	KA603R	3
40	Coil washer (see item 43)	KP318R	6 or 3
41	Barrier	KP1684R	3
42	Series coil replacement kit (includes item 20 Figure 25) (Add coil rating as suffix to catalog number)		
	Type RX		
	Phases A & B	KA869R2_____	2
	Phase C	KA869R1	1
	Type W		
	Phases A & B	KA835W2_____	2
	Phase C	KA835W1_____	1
43	Coil washer (used instead of KP318P on top of 400 and 560 amp coils only)	KP1075R	3
44	Interrupter assembly		
	Type RX		
	Phases A & B	KA49RV2	2
	Phase C	KA49RV1	1
	Type W		
	Phases A & B below serial no. 8894	KA28WV2	2
	Phase C below serial no. 8894	KA28WV1	1
	Phases A & B serial no. 8900 and above	KA168W2	2
	Phase C serial no. 8900 and above	KA168W1	1
45	Roll pin, 1/8 X 5/8. stl	K970801125062M	3
46	Moving contact assembly		
	Type RX	KA46RV1	3
	Type W	KA105DV1	3
47	Spacer	KP1505R	3
48	Flat washer, 5/16. stl	K900201031000Z	3
49	Stop nut, 5/16	KP2020A4	3
50	Flat washer, 1/4, stl	K900201025000A	6
51	Stopnut 1/4-20	KP2020A3	6
52	Flat washer, 3/8. stl	K900201037000A	9
53	Lockwasher, med, 3/8,, stl	K90801037000Z	9
54	Hex nut,3/8-16, stl	K880201116037A	9
55	Stringer assembly	KA62R	9
56	Insulator	KP3230A14	9
57	Flat washer, #24S, brass	K900525039087H	3
58	Lead		
	Type RX (4 per phase)	KP3250A1	12
	Type W (6 per phase)	KP3250A1	18
59	Insulator	KP2104A9	2
60	Insulator sleeve	KP2104A15	3
61	Toggle assembly		
	Type RX		
	Serial no. 2901 and above	KA166W	1
	Below serial no. 2878	KA450R3	1
	Type W		
	Serial no. 8901 and above	KA166W	1
	Serial nos. 7334-8893	KA450R3	1
62	Bracket	KP257L	2

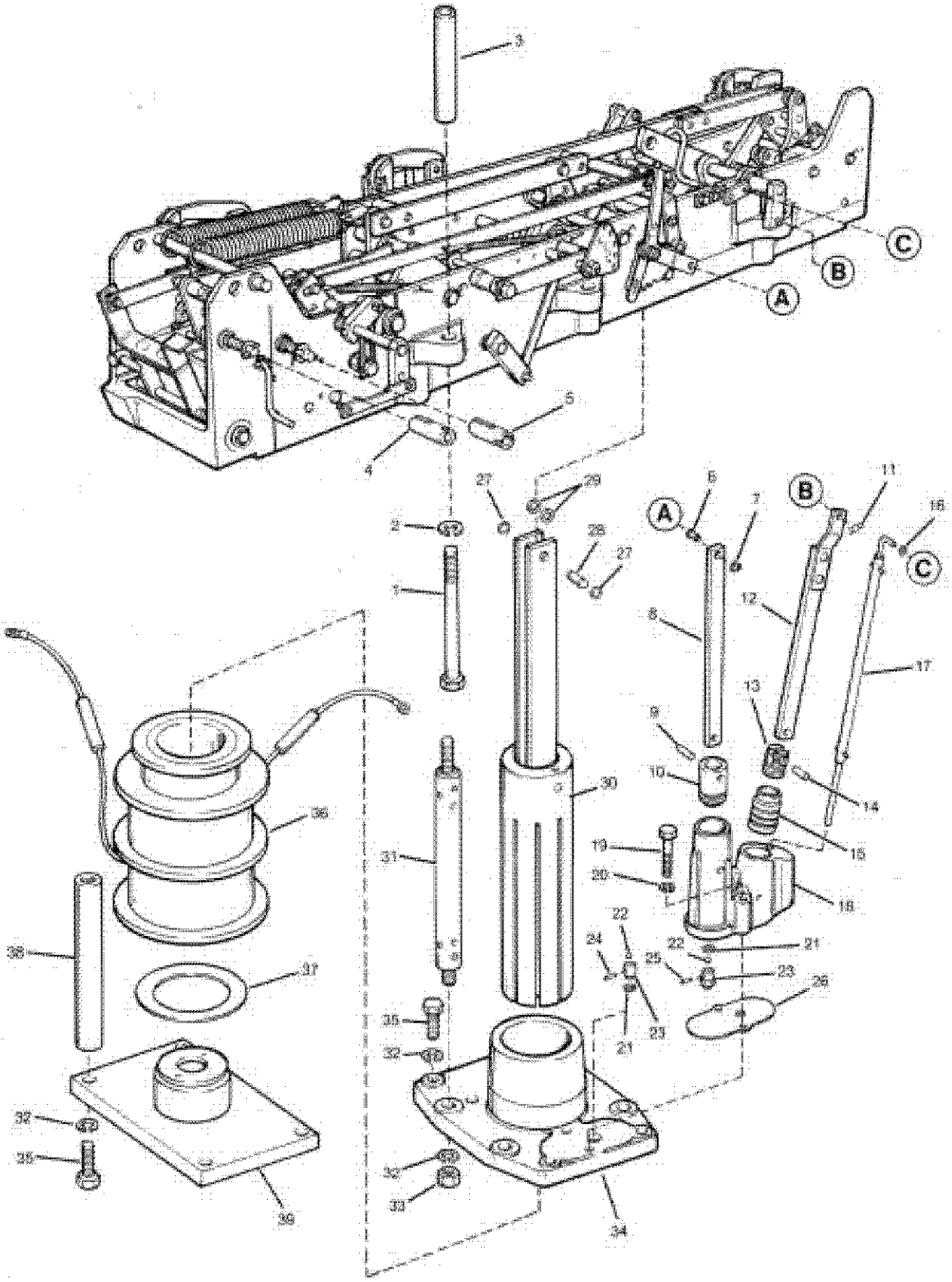

Figure 27.
Closing solenoid and hydraulic control parts.

Closing Solenoid and Hydraulic Contol Parts (Figure 27)

Item No.	Description	Catalog Number	Quan. Req'd.
1	Capscrew, hex socket hd 1/2-13 x 4-1/2 stl	KP2036A3	6
2	Split lockwasher, med, 1/2, stl	K900801050000Z	6
3	Spacer	KP3182A1	6
4	Counter shaft coupler	KP2448R	1
5	Operating lever coupler	KP2447R	1
6	Pivot pin	KP418H	1
7	Retaining ring Type C, 1/4, stl	K970901250000M	1
8	Lockout piston link	KP122R	1
9	Pin	KP3055A3	1
10	Lockout piston	KP112R	1
11	Spring clip	KP2018A1	1
12	Pump link	KA97R	1
13	Pump piston	KP1733R	1
14	Pin	KP3055A1	1
15	Pump piston shell	KP1732R	1
16	Retaining ring, Type E, 1/8", stl	K971001125000A	1
17	Quick reset valve assembly	KA423R	1
18	Pump and lockout piston block	KP1300R	1
19	Capscrew, hex hd,1/4-20 x 1-3/4, stl	K730101125175A	2
20	Split lockwasher, med, 1/4, stl	K970801025000A	2
21	O-ring gasket	KP2000A3	2
22	Ball	KP2025A2	2
23	Ball seat	KP155H2	2
24	Ball retainer pin	KP3051A3	1
25	Ball retainer pin	KP3051A1	1
26	Gasket	KP116R	1
27	Retaining ring, Type C, 3/8", stl	K970901312000M	2
28	Groove pin	KP3126A2	1
29	Flat washer, SAE, 3/8, stl	K900201037000A	2
30	Plunger and link assembly	KA50R	1
31	Stringer assembly	KA62R	4
32	Split lockwasher, med, 3/8. stl	K900801037000Z	12
33	Hex nut, 3/8-16, stl	K880201116037A	4
34	Solenoid frame	KP100R2	1
35	Capscrew, 3/8-16 x 1-1/2. stl	K730101137125A	8
36	Closing coil replacement kit (includes closing coil, lower coil gasket 37 (Figure 27), two fuse assemblies 57 (Figure 26), and voltage data plate, 19 Figure 25).		
	2.4 kv	KA834R1	
	3.3 kv	KA834R10	
	4.16-4.8 kv	KA834R2	
	6.0 kv	KA834R6	
	7.2-8.32 kv	KA834R3	
	11.0 kv	KA834R9	
	12.2-13.2 kv	KA834R4	
	14.4 kv	KA834R5	
	Rec!osers with low voltage closing		
	48 vdc	KA834R16*	
	125 vdc	KA834R7*	
	250 vdc	KA834R8*	
37	Solenoid gasket	KP389R	1
38	Solenoid frame post	KP1669R	4
39	Solenoid bridge plate assembly	KA644R3	

* No fuses required with low-voltage dc coils, when converting a recloser to low-voltage operation use the low-voltage contactor and coil kit, P/N KA887R: specify desired operating voltage (Vdc or Vac).

Cooper Power Systems

**Quality from
Cooper Industries**

©1991 Cooper Power Systems, Inc.
Kyle® is a registered trademark of Cooper Industries, Inc.

P.O. Box 2850 • Pittsburgh, PA 15230

Printed on Recycled Paper

COOPER
Cooper Power Systems

Reclosers

Types RV and WV Maintenance Instructions

Service Information
S280-30-9

34.5 Kv • 400 Amp (Type RV) (Serial No. 4111 and after)
34.5 Kv • 560 Amp (Type WV) (Serial No. 901 and after)

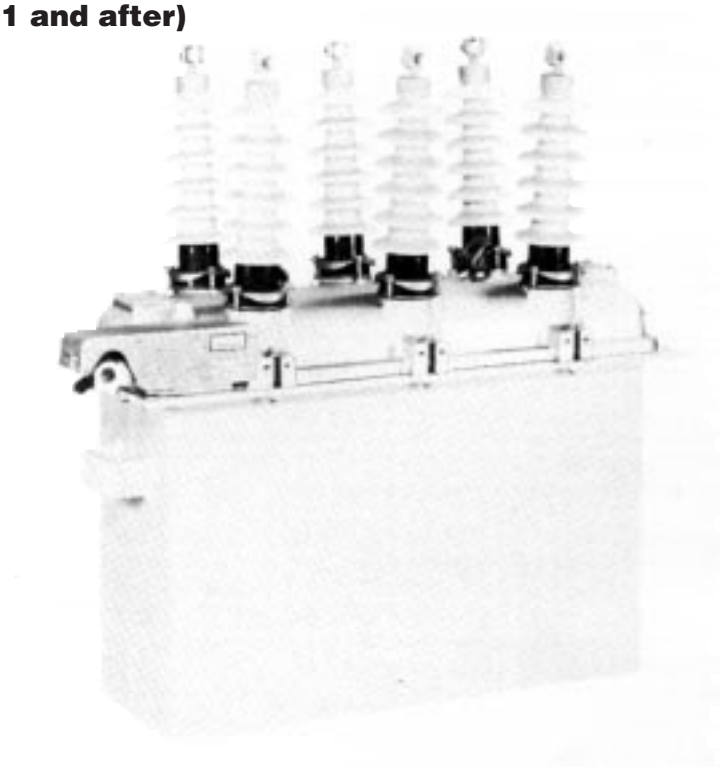

CAUTION
Do not energize this equipment out of oil.

Figure 1.
Type RV oil -interrupting, hydraulically controlled, automatic circuit recloser. 84601KMA

CONTENTS

Introduction **2**
Description and Operation **2**
General **2**
Manual Operating Handle **2**
Non-Reclosing Lever **2**
Contact Position Indicator **2**
Interrupters **2**
Closing Solenoid **3**
Closing Solenoid Contactor **3**
Hydraulic Pump and Lockout Piston **3**
Series Trip Solenoids **3**
Time Delay Unit **3**
Mechanism Operation **4**
Hydraulic Control System Operation **4**
Maintenance **5**
Frequency of Maintenance **5**
Periodic Maintenance Inspection **5**
Manual Operation of the Recloser **6**
Insulation Level Withstand Tests **7**
Oil Condition **7**
Shop Maintenance Procedures **8**
Control Lever Overtravel Adjustments **8**
Bushings **8**
Interrupters Assembly **9**
Closing Solenoid Contactor **9**
Closing Solenoid **9**
Series Trip Solenoid **10**
Solenoid Disassembly **10**
Solenoid Replacement **10**
Time Delay Unit **11**
Maintenance **11**
Replacement **11**
Removing Mechanism from Head **11**
Reinstalling Mechanism into Head **12**
Testing **12**
Service Parts List **12**
Bushing Part (Figure 24) **13**
Head and Tank Assembly (Figure 25) **14**
Trip Coil and Interrupter Mechanisms (Figure 26) ... **16**
Closing Solenoid and Hydraulic Control Parts (Figure 27) **18**

These instructions do not claim to cover all details or variations in the equipment, procedure, or process described, nor to provide direction for meeting every possible contingency during installation, operation, or maintenance. When additional information is desired to satisfy a problem not covered sufficiently for the user's purpose, please contact your Cooper Power Systems sales engineer.

January 1987 • New Issue

INTRODUCTION

Service Information S280-30-9 provides the maintenance instructions for Type RV and WV three-phase, hydraulically controlled, oil reclosers. Included is a general description of the recloser and its operation, instructions for periodic inspection and routine maintenance, testing procedures, and instructions for shop repairs. A service parts list, keyed to exploded-view drawings of the recloser is included at the back of the manual.

DESCRIPTION AND OPERATION

General

The Type RV and WV reclosers are self-controlled devices that sense and interrupt distribution system fault currents. They automatically reclose to restore service if the fault is temporary and then reset for another programmed sequence of operations. If the fault is permanent the recloser locks open after one, two, three or four operations, depending upon its operating settings. All three phases open, close, and lock out simultaneously.

Opening sequences of these reclosers can be all fast, all delayed, or any combination of fast followed by delayed operations; up to the maximum of four operations. On coordinated systems, fast operations clear temporary faults before branch-line fuses can be damaged. Delayed openings allow time for fuses or other downline protective devices to clear so that permanent faults can be confined to smaller sections of line.

Closing energy, as well as energy to charge the opening springs, is supplied by a high-voltage closing solenoid which is momentarily connected phase-to-phase through a high-voltage contactor.

A “trip-free” yellow operating handle, located under the sleet hood, will manually lock open the recloser. It cannot manually close the recloser, but must be in the CLOSED position for the closing solenoid contactor to operate. A red contact position indicator, linked to the recloser mechanism but independent of the yellow operating handle, is also located under the sleet hood.

The location of the major components of a RV recloser are shown in Figure 2. They are similar for the WV recloser. Being aware of the location of these components and their operation will provide a quicker and clearer understanding of the recloser maintenance and repair procedures that follow.

Manual Operating Handle

When the recloser operates to lockout, the (yellow) manual operation handle drops down (“trips-free”) from under the sleet hood, to give a visual indication of recloser lockout. The handle must be reset manually before the recloser can be closed. Lifting the handle up mechanically closes the closing solenoid contactor, and if power is available to the closing coil circuit, the closing solenoid will energize, resetting the recloser.

A closed recloser can be manually opened and locked out by pulling down the yellow handle.

Non-Reclosing Lever

The non-reclosing lever provides the capability for locking out the recloser on the first trip operation regardless of the programmed number of operations to lockout.

Contact Position Indicator

The red arrow-like contact position indicator flag is coupled to the recloser mechanism to show the position of the main contacts. When the flag is down, the interrupter contacts are open; when the flag is up, the contacts are closed.

Interrupters

Circuit opening and fault interruption is achieved by bridge-type contacts that provide two current breaks in series per phase. The bayonet-type moving contacts are silverplated tungsten alloy for erosion resistance and good conductance. The stationary contact assemblies are tulip-type clusters of silverplated contact fingers held together by garter springs. The contacts are selfcleaned by the opening and closing wiping action.

Each current break is provided with a self-generating-type arc interrupter structure which includes a series of vented chambers.

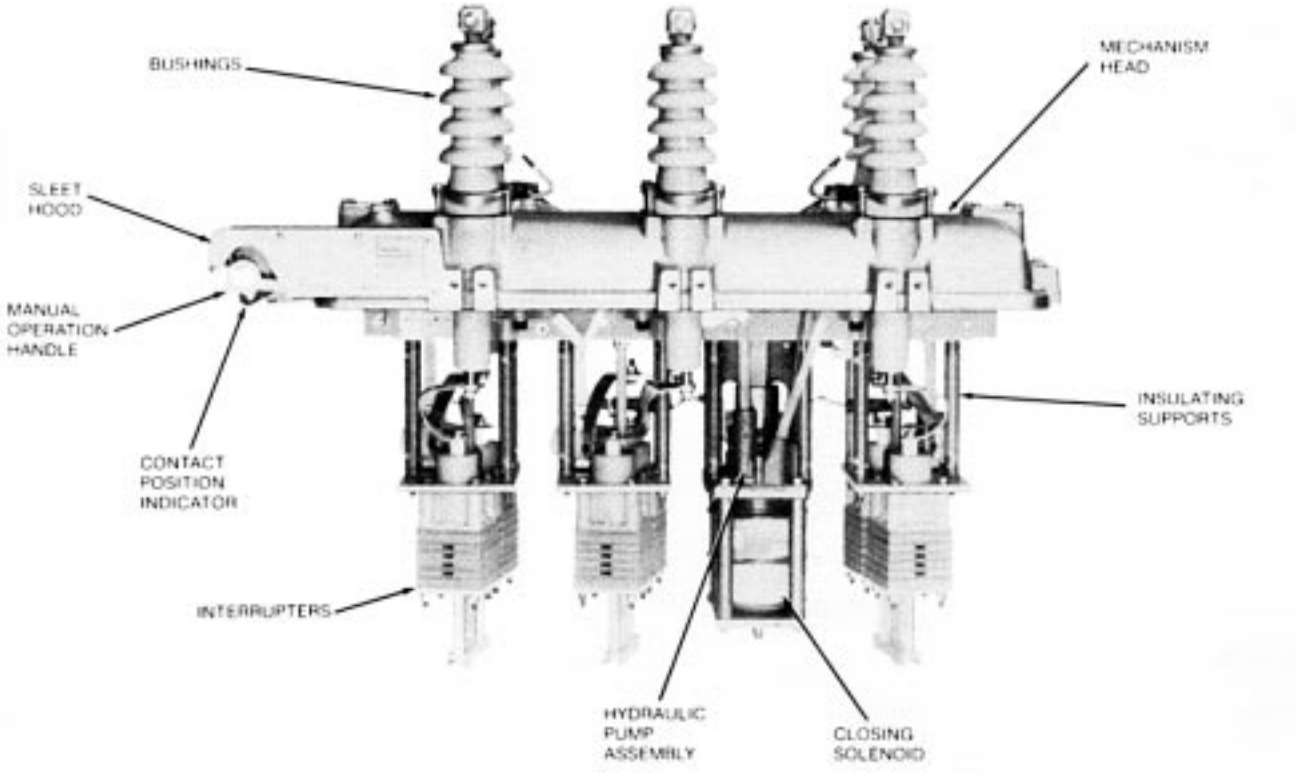

Figure 2.
Untanked Type RV recloser.

86821KMA

As the contacts open, the arc generates gas pressure in the upper chamber which blasts oil across the arc and out through the vents. As a result, arc extinction is fast and arc energy levels do not increase as fast at higher fault-current levels.

Closing Solenoid

The moving contacts of the interrupters are closed by the closing solenoid, which also extends the opening springs in the head mechanism. This solenoid is energized for only a few cycles during each closing operation when it is momentarily connected across phases B and C.

Closing Solenoid Contactor

Mechanically operated by the head mechanism, the snap-action contacts of the closing coil contactor complete the high-voltage circuit to the closing solenoid for each closing operation.

Hydraulic Pump and Lockout Piston

The hydraulic pump counts the number of times the recloser trips. With each trip the pump piston is pushed into the pump cylinder, oil is forced through the lockout cylinder check valve into the lockout cylinder. This causes the lockout piston to be raised one step.

When the recloser resets the pump piston is pulled back to the top of the pump cylinder and oil is drawn in through the intake check valve.

If the recloser trips again the pump piston will actuate causing the lockout piston to be pushed up another step. This cycle will repeat until the recloser locks out. Once locked out the quickreset rod is mechanically raised allowing the lockout piston to quickly resettle. If the recloser does not lockout, the lockout piston will resettle gradually (at a rate of approximately 90 seconds per accumulated operation at 25° C).

Series Trip Solenoids

The series trip solenoids (Figure 3) are connected in series with the interrupters, each carries full line current. When line current exceeds the minimum trip rating of a coil the plunger is drawn into the solenoid. Near the end of the plunger stroke the recloser mechanism trips.

When the recloser mechanism is sequenced to the delayed operation phase, the speed of plunger movement is restrained by a time-delay unit. The restrained plunger movement provides a fixed time delay before the recloser mechanism trips.

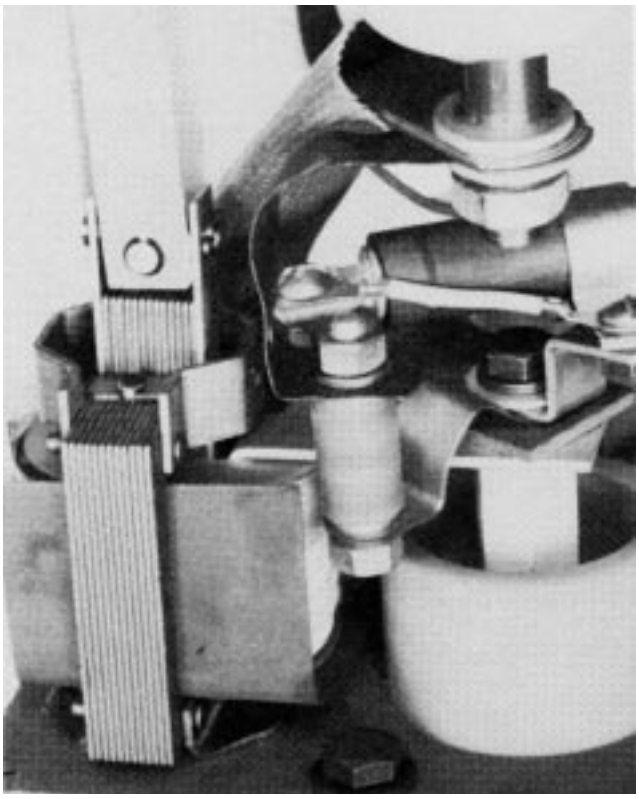

Figure 3. 86825KMA
Series Trip coil.

Time Delay Unit

When the mechanism is sequenced to the delayed operation phase, the latch assemblies of the trip solenoid plunger linkages are engaged with the arms on the sealed time-delay units, Figure 4a and 4b. Trip solenoid plunger movement is then restrained by the time-delay unit, which provides a consistent delay action by forcing hydraulic fluid through a calibrated orifice within the unit.

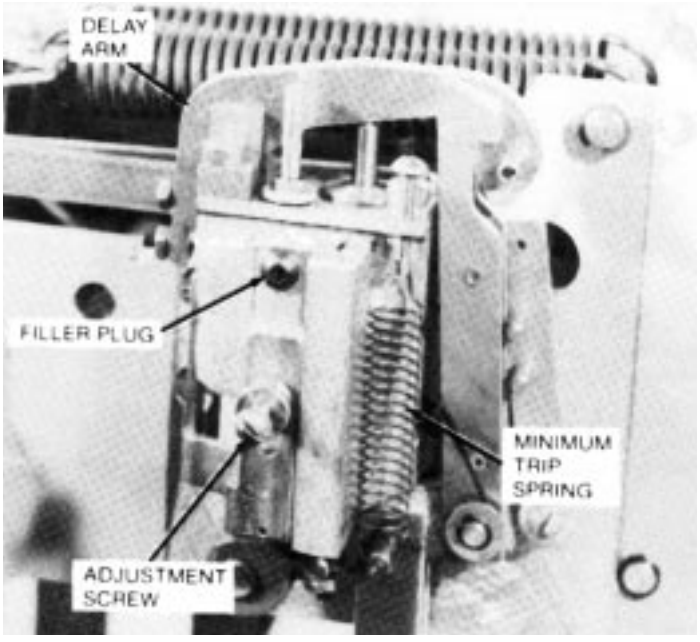

Figure 4a. 82020KMA
Time delay unit (old).

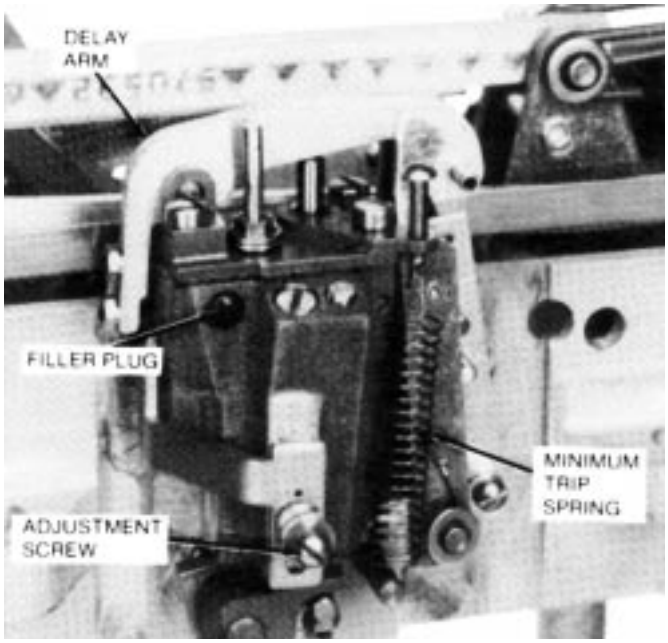

Figure 4b. 86780KMA
Time delay unit (new).

MECHANISM OPERATION

The operating mechanism, mounted in the head, opens and closes the interrupter contacts. Contact opening is initiated by a series trip solenoid which triggers the trip mechanism to release the loaded opening springs. Contact closing is performed by the closing solenoid which also charges the opening springs and resets the mechanism for the next trip operation. The basic operation of the mechanism is shown in Figure 5.

With the interrupter contacts closed (a), the opening springs are fully extended and the mechanism is in the reset state. When excessive current levels are passing through the series trip coil the solenoid plunger is actuated. The trip solenoid plunger operates the toggle latch, releasing the toggle. This action releases the opening springs (b) which starts the contact bar assembly in motion. The spring-biased reset lever rotates to snap the toggle closed. This action of the reset lever also pulls the plunger out of the closing solenoid. At this point the interrupter contacts are fully open (c) and the mechanism is in the open state. When the closing solenoid plunger reaches the top of its stroke it mechanically closes the closing coil contactor which energizes the closing solenoid. As the plunger is drawn down into the coil the reset lever is pulled back and latched in its original position. The interrupter contacts are closed (d) and the opening springs are extended.The mechanism is now readyfor another opening operation.

HYDRAULIC CONTROL SYSTEM OPERATION

The hydraulic pump, associated cam, and linkages regulate the number of fast and delayed operations, count the operations to lockout, and initiate lockout after a preset numberof operations. The hydraulic pump (Figure 6) is linked to the closing-solenoid plunger and is pushed downward with each return operation of

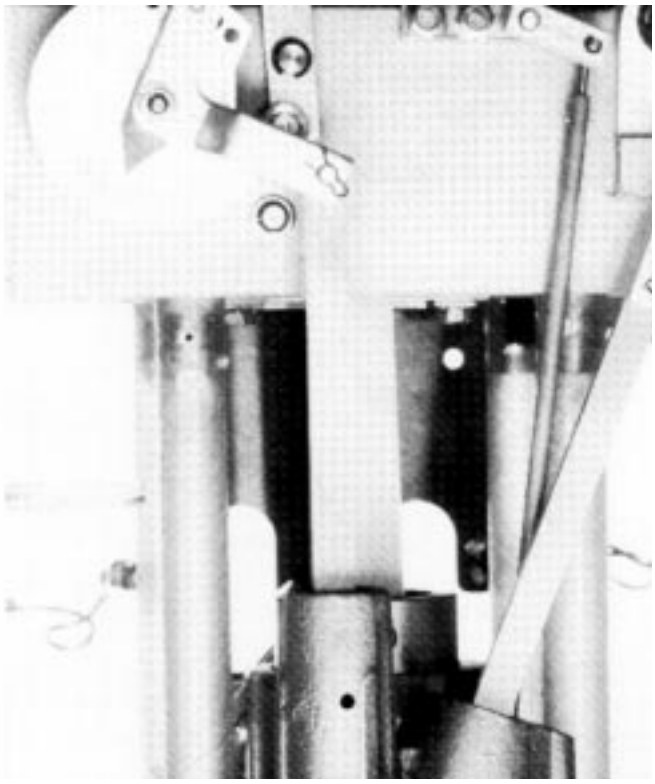

Figure 6.
Hydraulic pump.

86827KMA

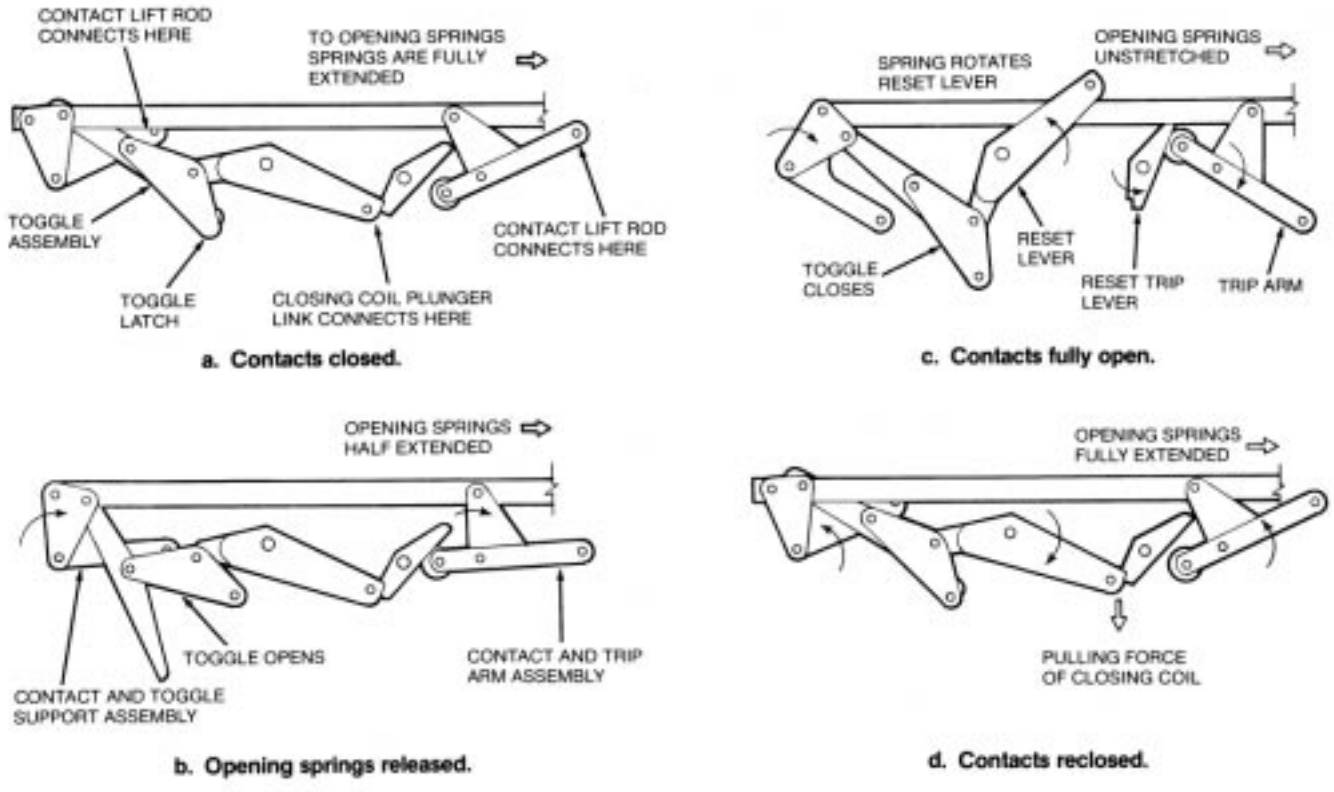

Figure 5.
Head mechanism lever arrangement

the plunger. With its downward stroke, the pump forces a measured amount of oil under the lockout piston (Figure7), causing it to rise one step. When the closing coil is energized, the recloser contacts close and the pump returns to its normal position.

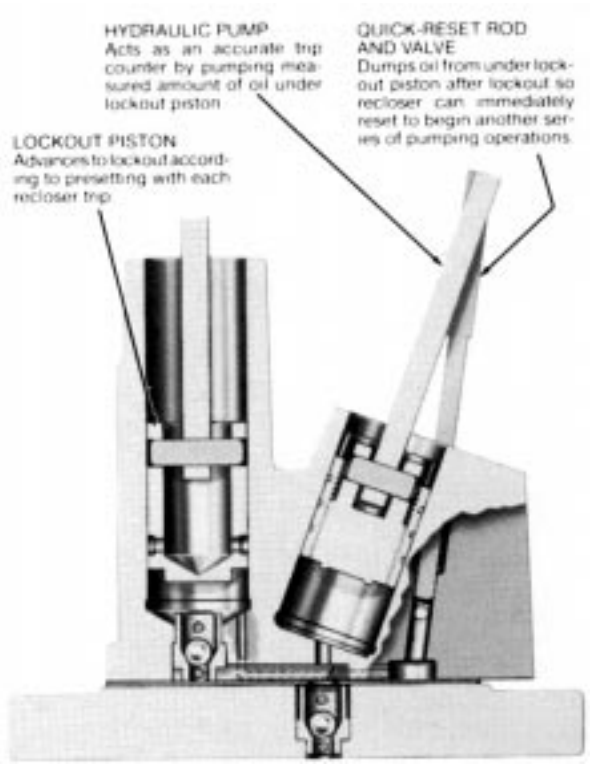

Figure 7.
Hydraulic pump cross section.

86717KMA

The lockout piston is linked to the sequence selector cam and the lockout bar. Upward movement of the lockout piston causes the cam to rotate counterclockwise and the lockout bar to advance one step. The number of fast operations is preset on the cam. After these operations, the cam engages the roller and pushes it to the right. A mechanism arm attached to the roller engages the time-delay mechanism on each phase. Subsequent operations are then delayed.

When the lockout bar completes its travel, it trips the lockout latch. Another set of linkages and springs then lock the recloser contacts open. The quick reset rod is raised, allowing the hydraulic pump and lockout piston assembly to reset quickly. The entire pump and sequencing mechanism is now ready for the next full sequence of operations. For temporary faults that are cleared before the recloser mechanism reaches lockout, the hydraulic pump and lockout piston assembly resettles gradually (at a rate of approximately 90 seconds per operation at 25° C) to reset the recloser mechanism.

Ratings

ELECTRICAL RATINGS

	Type RV	Type WV
Nominal system voltage, kv	34.5	34.5
Maximum rated voltage, kv	38	38
Rated impulse withstand voltage (BIL) kv crest	150	150
60-Hertz withstand voltage, kv		
Dry, one minute	70	70
Wet, ten seconds	60	60
Rated maximum continuous current, amps	400	560

DUTY CYCLE

% of Interruping Rating	Maximum Circuit X/R Value	Number of Unit Operations	
		Type RV	Type WV
15-20	4	28	28
45-55	8	24	20
90-100	15	10	10
		Total 62	Total 58

MAINTENANCE

Frequency of Maintenance

Because reclosers are applied under widely varying operating and climatic conditions, maintenance intervals are best determined by the user, based on actual operating experience. To assure proper operation, reclosers must be maintained when they have operated the equivalent of a complete duty cycle and before the dielectric strength has deteriorated below prescribed levels. In the absence of specific operating experience, the following procedures are recommended.

- When Type RV and WV reclosers are operated under usual service conditions as defined in ANSI (American National Standards Institute) C37.60, “Standard Requirements for Automatic Circuit Reclosers for Alternating Current Systems,” it is recommended that the following maintenance procedures be performed at the completion of an equivalent duty cycle.
- However, if the recloser has not completed an equivalent duty cycle within three years, it is recommended that a Periodic Maintenance Inspection be performed at that time.

Periodic Maintenance Inspection

Each periodic maintenance inspection at the completion of an equivalent duty cycle should include at least the following:

1. Bypass and remove the recloser from service.
2. Thoroughly clean exterior of unit.
3. Inspect external components.
  A. Check for broken or cracked bushings. Replace as necessary. (See page 8 for procedure.)
  B. Check for paint scratches and other mechanical damage; paint to inhibit corrosion.
  C. Note counter reading and enter in the record log.
4. Perform a dielectric withstand test to check the insulation level of the recloser. (See page 7 for procedure.)
5. Manually operate mechanism; operation should match configuration noted on the data plate.
  A. Partially untank unit and support head and mechanism assembly with clean wooden blocks.
  B. Use manual closing tool to close interrupters.
  C. Pull down on strip solenoid trip links until mechanism trips.

  NOTE: The force required to pull down the trip-links will be increased when the time delay units are engaged.

  D. Repeat steps B and C until lockout has been reached (yellow handle will drop).
6. Untank the recloser to expose the internal components.

CAUTION
Be sure the recloser is open (yellow operating handle under the sleet hood is down) before untanking, so that the mechanism can not be accidently tripped while out of oil.

7. Clean all internal components.
A. Remove all traces of carbon by wiping with a clean, lint-free cloth.
B. Flush the mechanism with clean transformer oil.

CAUTION
Never use volatile solutions, detergents, or water-soluble cleaners.

8. Remove bushings, clean and inspect.

NOTE: DO NOT dismantle oil filled bushings.

9. Replace all external seals and gaskets.
10. Inspect mechanism for cracks, carbon tracking, flashovers or other damage. Repair or replace as required.
11. Check the condition of the closing solenoid contactor contact tips. If the contact tips are eroded replace entire contactor assembly. (See page 9 for replacement procedure.)
12. Inspect closing coil for cracks or other damage.
13. Inspect series trip solenoid.
14. Remove the moving contact assemblies from the bottom of the contact lift rod, and check the erosion of the contact load surfaces.
A. Arcing tips of the moving contacts can experience considerable erosion before replacement is necessary. Slight pitting and discoloration can be dressed with a piece of crocus cloth.
B. However, erosion of the contact load current surfaces necessitates replacement of the entire interrupter assembly.
C. Figure 8 shows a moving contact after it has experienced severe interrupting duty and a new contact for comparison. The used contact has reached the condition where interrupter replacement is necessary.
15. Reinstall bushings, use new gaskets. (See page 8 for installation procedures.)

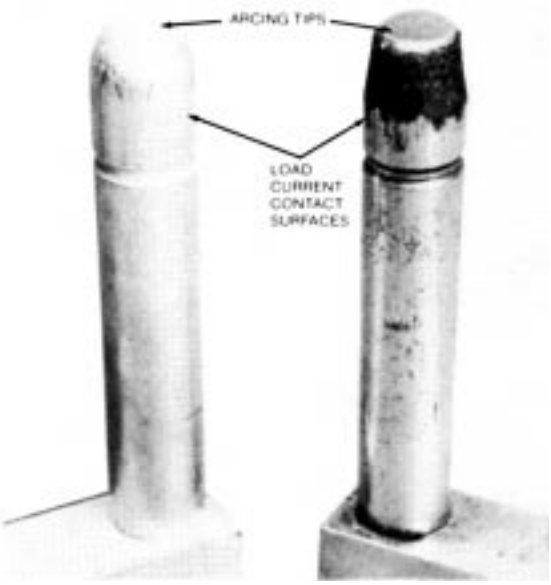

85693KMA

Figure 8.
Left: new moving conact; right: contact after one full duty cycle.

16. Drain the tank, and clean out all sludge and carbon deposits. If oil is to be reused it must be filtered and the dielectric strength checked.
17. Fill with new, clean insulating oil up to 2-1/4 inches below the top of the tank flange. Tank capacity is approximately 41 U.S. gallons. See Oil Condition on page 7.
18. Clean the head gasket seat and retank the recloser.
A. Move the yellow operating handle under the sleet hood to the up position to avoid any possible binding during tanking.
B. Replace the head bolts and tighten to 35-55 ft-lbs. torque. Apply clamping force gradually and equally, in rotation, to each bolt to achieve an evenly distributed gasket sealing pressure.
19. Check the oil level with the dipstick in the head and adjust the level to the upper line on the dipstick.

NOTE: If the recloser is equipped with an oil-sight gage, the oil level should be above the sight gage. If the oil surface line is visible in the window, add oil to raise the level to the upper line on the dipstick.

20. Perform high-potential insulation withstand test (page) to make sure the dielectric clearances within the tank have not been compromised. Also, use a suitable tester to verify that the recloser is operating per data plate specifications.

Manual Operation of the Recloser

The recloser may be closed and opened manually while the mechanism is either in or out of oil.

MECHANISM IN OIL

For a tanked recloser (mechanism immersed in oil) use the following manual operating procedure.

1. To close the recloser.
A. Remove the closing tool port cover and gasket from the side of the head casting.
B. Insert the KA90R T-handle closing tool (furnished as an accessory) into the closing tool port (Figure 9) and engage the pin on the closing shaft.

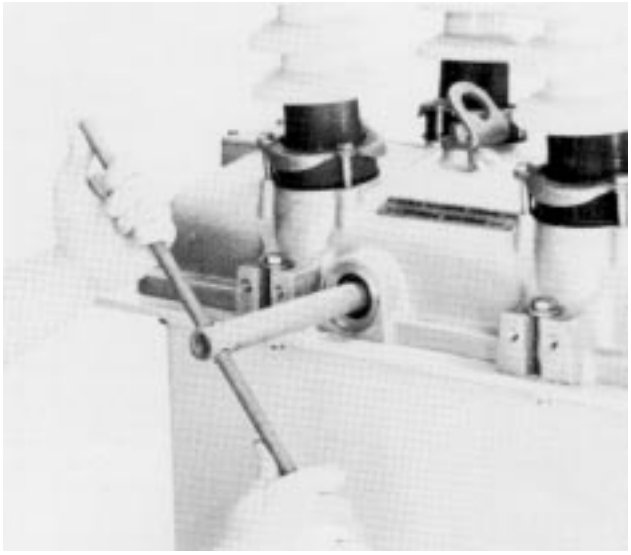

Figure 9.
Manually closing recloser.

82008KMA

C. Lift up the yellow operating handle under the sleet hood to reset the mechanism.
D. Turn the closing tool one-quarter turn clockwise to close the main contacts.

CAUTION
Never use the KA90R closing tool to close an energized recloser. Forcing the tool beyond the mechanism stop may shear the pin on the closing shaft.

2. To open the recloser.
A. Pull down the yellow operating handle to trip open the recloser.

NOTE: If the mechanism is partially untanked, and properly supported, the recloser can be tripped open by pulling down on the series trip solenoid linkage.

MECHANISM OUT OF OIL

To operate the mechanism out of oil, proceed as follows:
1. To close the recloser.
A. If the mechanism is still mounted in the head use the procedure for a tanked recloser above (Mechanism in 0il).
B. If the mechanism is removed from the head turn the trip reset shaft (Figure 10) with a pair of needlenose pliers to reset the mechanism, then turn the closing shaft clockwise with the closing tool to close the main contacts.

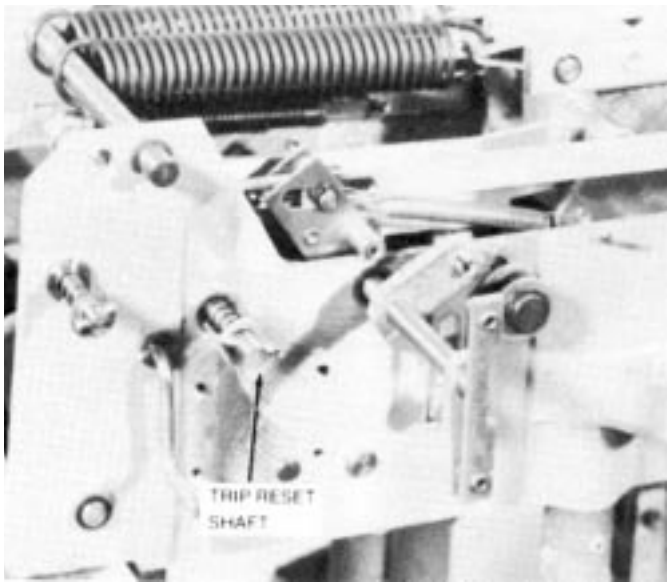

Figure 10. 82016KMA
Resetting trip reset.

CAUTION
The mechanism may be damaged if it is "quick-tripped" with the yellow operating handle while out of oil.

2. To open the recloser contacts while the mechanism is out of oil, proceed as follows:
A. Using the T-handle closing tool turn the closing shaft clockwise and hold against the stop.
B. Release the trip lever (Figure 11) by moving it to the right.
C. Then slowly allow the closing tool to rotate counterclockwise to open the main contacts.

NOTE: This procedure requires two people; one to operate the closing tool, the other to operate the trip lever.

Insulation Level Withstand Tests

High-potential withstand tests provide information on the dielectric condition of the recloser. Testing is performed at 75% of the rated low-frequency withstand voltage (52.5 kv).

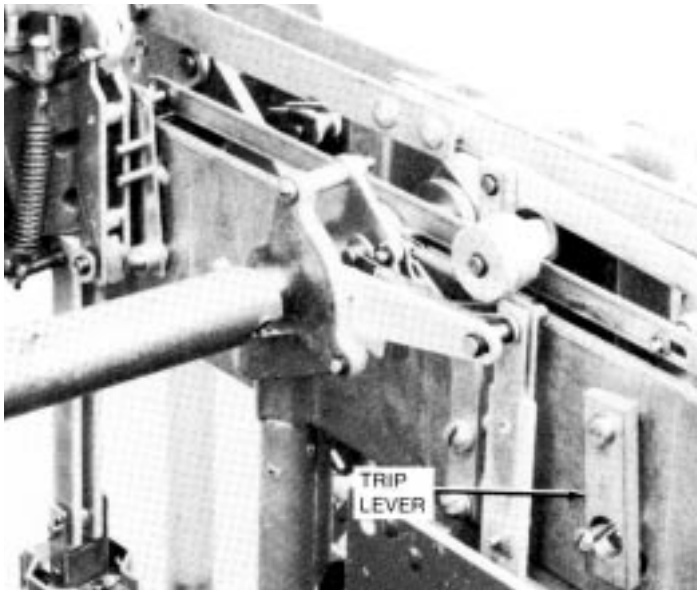

Figure 11. 86793KMA
Trip lever releases mechanism when opening recloser out of oil.

TEST 1: Proceed as follows:
1. Manually close main contacts of recloser (see page 6 for procedure).
2. Ground recloser tank and head.
3. Connect all three source-side bushings (1, 3, 5) together.
4. Apply proper test voltage to source-side bushings.
5. The recloser should withstand the test voltage for 60 seconds.
TEST 2: Proceed as follows:
1. Manually close main contacts of the recloser (see page 6 for procedure).
2. Ground recloser tank and head.
3. Ground Phase A (bushing 2) and Phase C (bushing 6).
4. Apply proper test voltage to Phase B (bushing 3).
5. The recloser should withstand the test voltage for 60 seconds.
TEST 3: Proceed as follows:
1. Open main contacts of recloser (see page 6 for procedure).
2. Ground recloser tank and head.
3. Connect and ground all three load-side bushings (2, 4, 6).
4. Connect all three source-side bushings (1, 3, 5).
5. Apply proper test voltage to source-side bushings.
6. The recloser should withstand the test voltage for 60 seconds.
7. Reverse the connections: ground source-side bushings (1, 3, 5); apply test voltage to load-side bushings (2, 4, 6) for 60 sec onds.
8. The recloser should withstand the test voltage for 60 seconds.

TEST RESULTS: These high potential withstand tests provide information on the dielectric condition of the recloser and the integrity of the interrupters.
A. If the recloser passes the closed-contacts tests (Tests 1 and 2) but fails the open-contacts test (Test 3) a deterioration of one or more of the interrupters is likely to be the cause. Check each interrupter individually to determine the failed phase or phases, and replace the interrupter(s). Retest to confirm the repair.
B. If the recloser fails the closed-contacts tests (Test 1 and 2) the cause is likely to be a diminished electrical clearance or a failed insulation. After correcting the problem, retest to confirm the repair.

Oil Condition

Oil provides the internal insulation barrier between phases and from phase to ground, and must be replaced before it deteriorates below a safe dielectric level. Replace the oil if its dielectric strength falls below 22 kv.

New oil should always be filtered before use, even though it is obtained from an approved source. Passing the oil through a blotter press will remove free water and solid contaminants such as rust, dirt, and lint. Keep aeration to a minimum during filtering to prevent moisture in the air from condensing in the oil and lowering its dielectric strength.

Used oil must be treated before reusing. Filtering may remove absorbed and free water and other contaminants to raise the dielectric strength to acceptable levels. However, filtering does not always remove water-absorbing contaminants and the dielectric strength may fall rapidly after being returned to service. Therefore the recloser should be filled with new oil, or oil that has been restored to like-new condition. Oil used in these reclosers conforms to ASTM Standard D3487, Type I; its property limits are shown in Reference Data R280-90-1, "Oil Specifications and Tests."

SHOP MAINTENANCE PROCEDURES

The operations described in this section should be performed under the cleanest conditions possible. The repair work, except for bushing replacement, will be simplified if the work bench is arranged so the mechanism/head assembly can be inverted (bushings down). No special tools are required for any of the repair procedures.

Control Lever Overtravel Adjustment

Check for proper adjustment of the control lever by first removing the sleet hood cover to expose the control lever. From the OPEN position, slowly push the control lever toward the CLOSED position. As the lever is pushed up, latching of the recloser will be felt. At this point the dimension between the top of the control lever and the underside of the sleet hood should be 1/4 inch (Figure 12).

If the control lever is not adjusted properly, remove the C-ring and slide the control lever from the shaft. Rotate the control lever clockwise to reduce the dimension or counterclockwise to increase the dimension. Slide the control lever back onto the shaft and recheck the dimension. When the proper dimension has been obtained replace the C-ring.

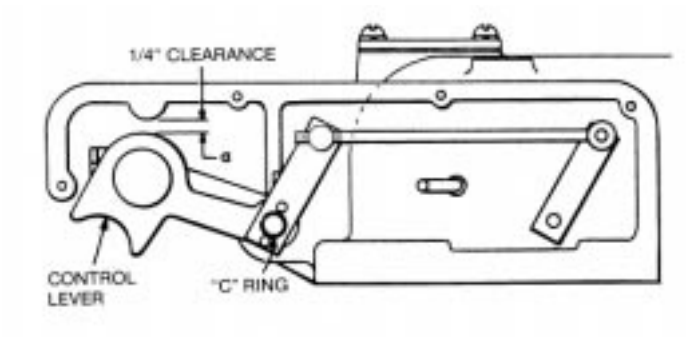

Figure 12.
Overtravel adjustment of control lever.

Bushings

Bushing maintenance generally consists of a thorough cleaning and a careful examination for chips, cracks, or other mechanical damage during the periodic maintenance inspection. Bushings must be replaced whenever damage is discovered.

The bushings used on Type RV and WV reclosers are oil-filled. The special fixtures and procedures required to assemble these bushings is beyond the scope of normal shop maintenance repair. Therefore if an oil bushing is in any way damaged, the complete bushing assembly must be replaced. Refer to Figure 13 and proceed as follows:

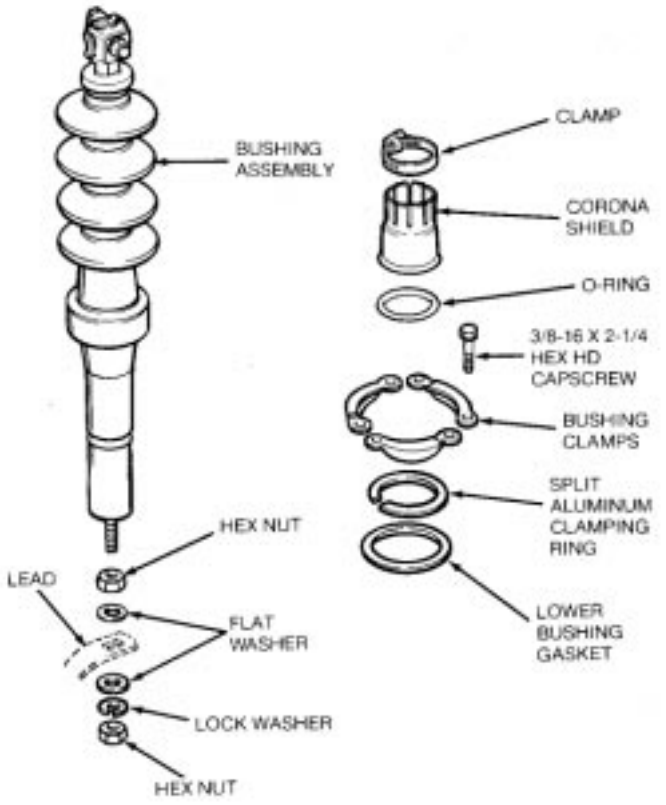

Figure 13.
Bushing replacement.

1. Disconnect bushing lead from bottom end of bushing rod.
2. Loosen the clamp securing the corona shield (Figure 14). Push shield up bushing to expose O-ring, remove O-ring.

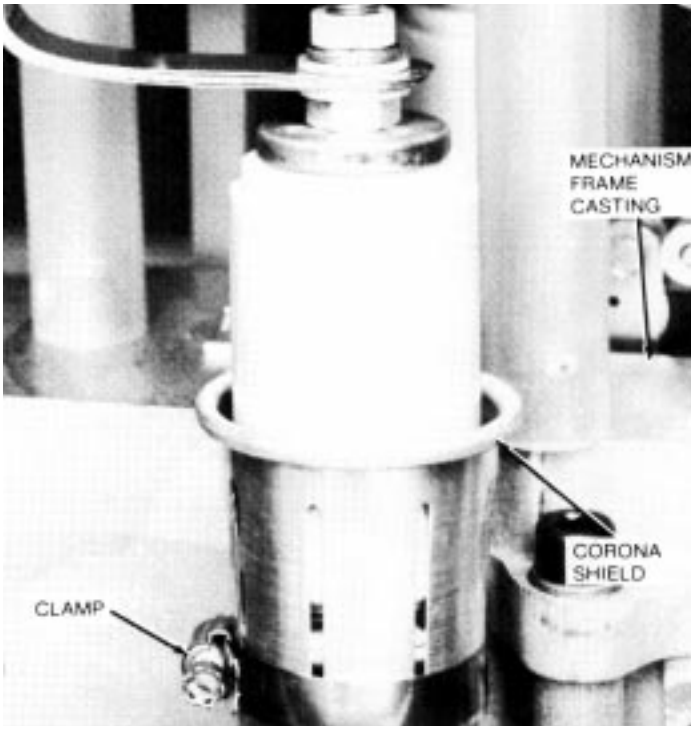

Figure 14.
Corona shield.

86823KMA

3. Remove the three hex head capscrews and clamps that secure the bushing to the head and pull corona shield and clamp off bottom of bushing as it is lifted out.
4. Remove and discard the lower bushing gasket.
5. Twist off the split aluminum clamping ring from the old bushing and install on the new bushing, if it is in good condition—replace if damaged.

NOTE: The clamping ring cushions and distributes the pressure between the ceramic and the clamps. **DO NOT OMIT.**

6. Install the new bushing through the head and slide corona shield and clamp over bushing.
7. Position bushing with the stud end of the terminal pointing outward.
8. Position the clamping ring with the split centered between two clamping bolts.
9. Reassemble the bushing to the head casting. Tighten the bolts evenly, a little at a time, to a torque of 10-15 ft-lbs.

NOTE: Clamping forces must be applied gradually and equally in rotation to each bolt. This results in an evenly distributed gasket sealing pressure.

10. Install corona shield O-ring into groove on bushing.
11. Slide corona shield down so inside edge is flush with mechanism frame. Position clamp approximately 1/4" above edge of the shield and secure tightly.
12. Reconnect the lead to the bushing rod.

Interrupter Assembly

1. Using a 1/2-inch thin wall socket, remove the vibration-proof hex nut that secures the contact yoke to the lift rod. Gently tap contact arm to remove contacts from the lift rod.
2. Remove the terminal bolt from the top of each stationary contact assembly.
3. Remove hex nuts, flat washers, and lock washers that secure the interrupter assembly to the stringers.
4. Slide the arc interrupter assembly (Figure 15) off.

NOTE: The arc interrupter and contact assembly and the moving contact assembly are both replaced as assemblies. They should both be replaced at the same time.

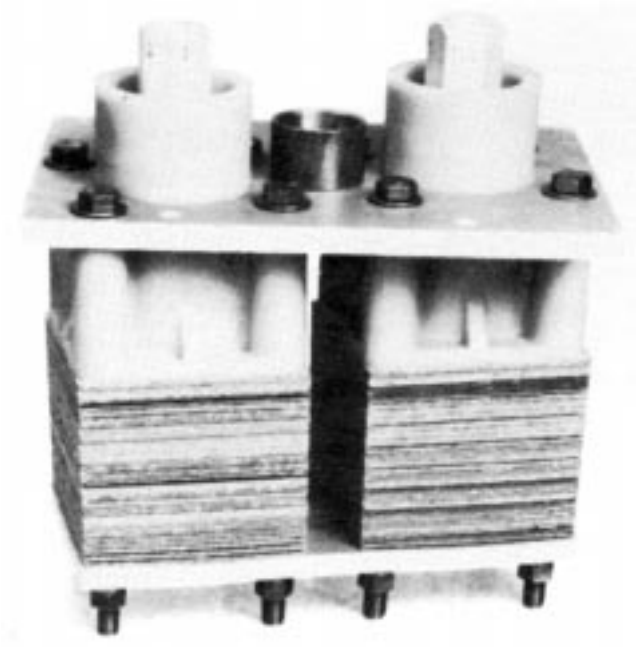

85695KMA

Figure 15.
Interrupter assembly.

5. Place the replacement interrupter assembly into position and secure it with original hardware.
6. Install the terminal bolts into each stationary contact assembly.
7. Place the movable contact assembly onto the lift rod and install a new vibration-proof hex nut.

NOTE: It is recommended that vibration-proof nuts not be reused.

Closing Solenoid Contactor

If the contacts are badly burned or eroded, the entire contactor must be replaced. See Figure 16 and proceed as follows:

1. Unhook the two toggle springs from the pin that connects the operating shaft of the contactor to the toggle arm.
2. Remove the C-type retaining rings and withdraw the pin.
3. Disconnect the two coil leads from the contactor.

NOTE: Reattach the lockwasher and hex nut to the contactor terminal immediately after disconnecting the coil lead to prevent loss of moving contact parts which are attached to the support plate with the same hardware.

4. Disconnect the two fuse leads from the contactor.
5. Remove three hex head capscrews and lockwasher that attach the contactor to the underside of the recloser mechanism frame and remove contactor.
6. Install new contactor by reversing the disassembly procedure. Use new C-rings to secure the toggle-link pin.
7. Connect solenoid coil leads to lower terminals.
8. Connect fuse leads to upper terminals.

NOTE: Be sure coil and fuse leads are positioned for maximum clearance to grounded parts.

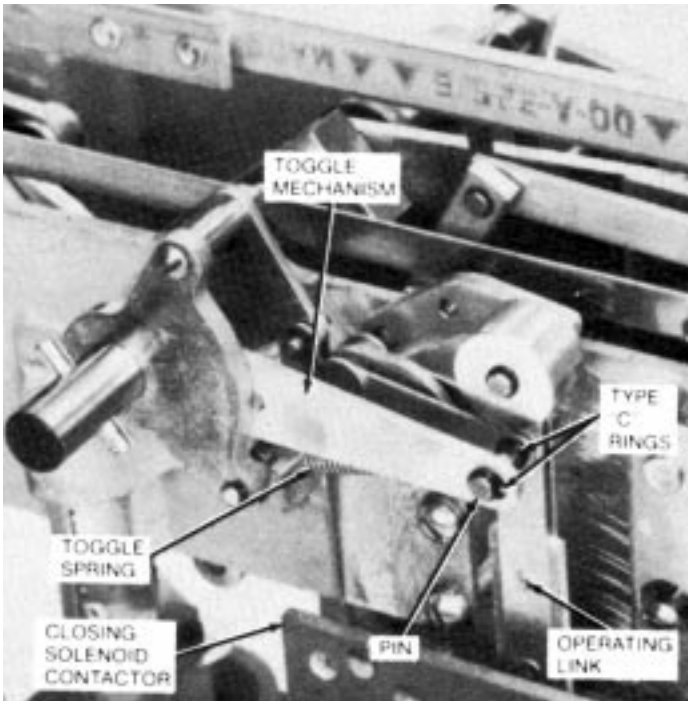

Figure 16.
Replacing closing coil contactor

86824KMA

Closing Solenoid

The closing solenoid coil is connected phase-to-phase and is rated to operate at full system voltage. It is protected with two fuses, one on either side. A data plate attached to the recloser head between source side bushings 3 and 5 provides the coil connection information.

If the solenoid coil must be replaced, due to damage or change in operating voltage, refer to Figure 17 and proceed as follows:

1. Disconnect the two coil leads from closing solenoid contactor.

NOTE: Reattach the lockwashers and nut to the contactor terminal immediately after disconnecting the coil lead to prevent loss of parts of the moving contact arm assembly which is attached to the support plate with the same hardware.

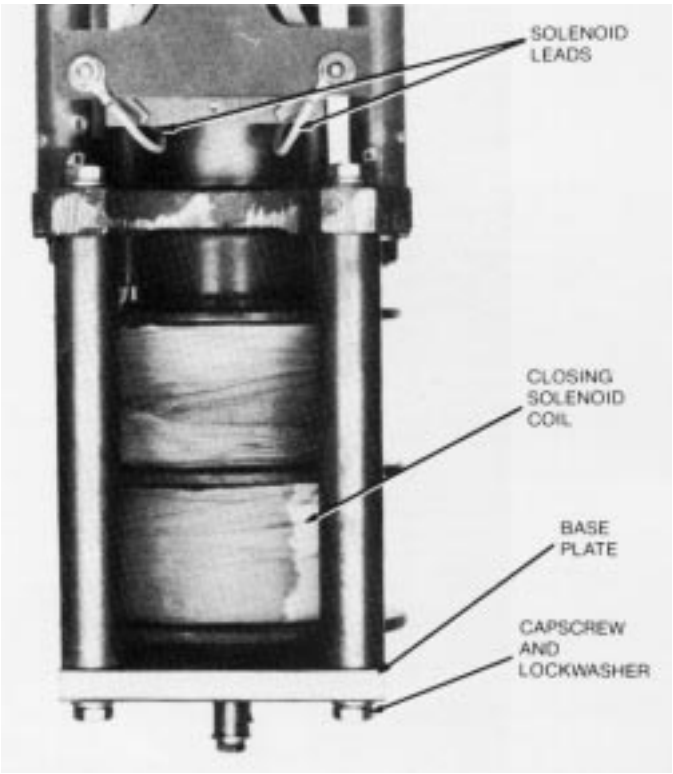

Figure 17 86828KMA
Parts involved in solenoid coil replacement.

2. Remove four capscrews and lockwashers which attach base plate to bottom of solenoid frame posts and lower coil and base plate.
3. Remove coil from the base plate and discard coil gasket.
4. Using a new coil gasket, install new closing coil on the base plate.

NOTE: A new coil gasket is included in the closing coil replacement kit.

5. Reassemble base plate to solenoid frame posts and connect coil leads to the contact or terminals. Make sure the coil leads clear the solenoid frame by at least 1/2-inch.
6. The closing coil replacement kit includes two new coil fuses which should be installed with the new coil.
7. The closing coil replacement kit also includes a new voltage date plate. Replace the plate on the sleet hood of the recloser head if the operating voltage of the recloser is being changed.

NOTE: RV reclosers, with 34.5 kv closing coil, between serial number 4110 have a rigid tube insulator on the long coil lead. Replacement coils for units below serial number 4110 include additional parts to modify the solenoid assembly to accommodate the rigid insulating tube. Installation instructions are included with the kit.

SERIES TRIP SOLENOID

The continuous current rating and the trip current rating of the recloser can tee charged by installing new coils in the series trip solenoids. Tripping occurs at about 200% of the continuous current rating of the standard coil and at about 140% when the alternate (400X or 560X) coils are used. The maximum interrupting rating of the recloser is dependent upon the continuous current rating of the series trip coil.

Two different coil replacement kits are required. One for Phase A and Phase B solenoids and another for Phase C (the interrupter furthest away from the sleet hood) which has an opposite wind because it mounts differently on the interrupter. The same basic replacement procedure is used for either type coil.

Solenoid Disassembly

1. Remove cotter pin; slide out the groove pin and spacer that connects the insulated operating links to the solenoid plunger (Figure 18).
2. Remove bolt that fastens the outer coil terminal and the bushing lead.
3. Remove the capscrew that connects the inner coil terminal strap to the interrupter current interchange.
4. Remove elastic stop nut and flat washer that secure solenoid frame to the upper current exchange mounting board. Lift entire solenoid assembly off board.
5. Remove solenoid plunger, guide clips, guide channels and upper coil washer.
6. Lift coil slightly and pull out of the solenoid frame.
7. Replace any damaged parts at this time.

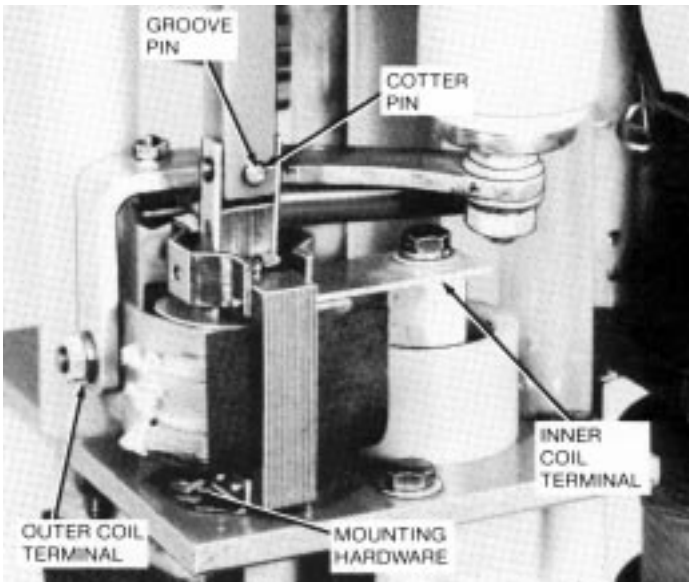

Figure 18. 85662KMA
Series trip solenoid removal.

Solenoid Replacement

Check lower coil washer before installing new coils. For coils rated 280 amperes and below the upper and lower coil washers are identical. For 400 and 560 ampere rated coils, the lower washer requires a larger center slot. The same upper washer is used with all coil sizes.

1. Pass upper insulating washer over terminal strap and align its slot with the coil slot (Figure 19).
2. Insert coil into the frame and slide the upper coil washer into position.
3. Replace in order the guide channels, guide clips and plunger.
4. Place the solenoid assembly back on the mounting board and secure it with the flat washers and elastic stop nuts.

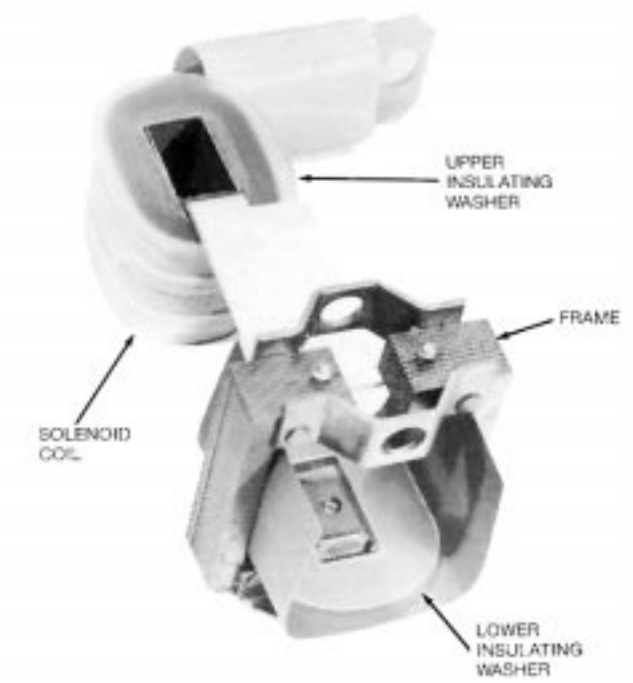

Figure 19. 82023KMA
Assembling solenoid series trip coil.

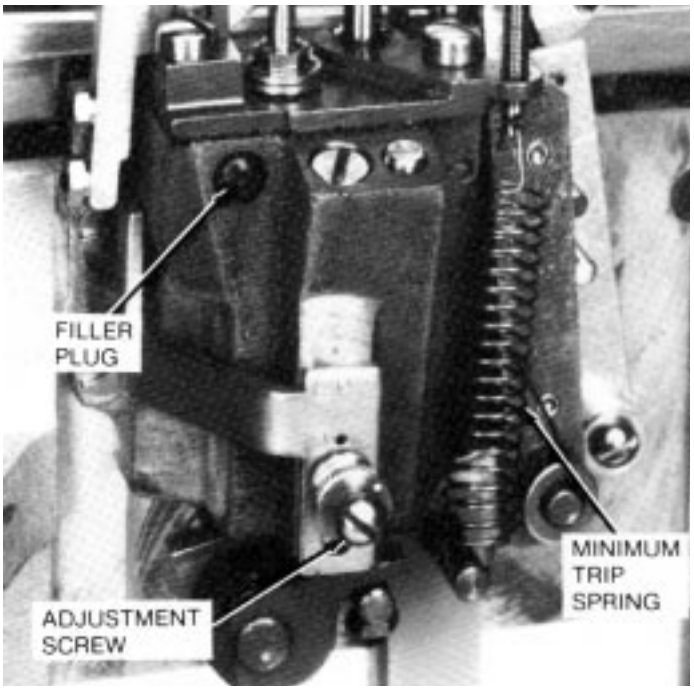

Figure 20. 86780KMA
Series trip solenoid removal.

5. Connect operating links to the solenoid plunger with the groove pin, spacer and cotter pin.
6. Connect the coil terminals to the current interchange and the bushing lead to complete the assembly.

TIME DELAY UNIT

The recloser is equipped with hydraulically-operated time delay units on each phase. These provide the different time-current characteristic (TCC) curves, as shown in Reference Data R28091-6. Each unit can provide either of two-time delay characteristic curves, but not all four (KA1194R1 provides B and C curves and KA1194R2 provides D and E curves).

When the mechanism is sequenced to the delayed operation phase, the latch assembly of the trip-coil plunger linkage is engaged with the arm of the time-delay unit, this provides consistent delay action by forcing hydraulic fluid through an orifice in the unit. Special aircraft-type fluid is used to minimize temperature effects.

Maintenance

Maintenance to the time delay units is limited to checking the fluid level in the units. Some loss of fluid is normal, therefore this inspection should be made each time periodic maintenance is performed.

To check the fluid level, remove the socket-head filler plug located on the side of the unit. Add enough fluid to bring the level up to the filler plug hole. Avoid introducing dirt, lint or any other foreign material when filling the unit as this can plug the orifice and cause erratic time-delay action.

NOTE: A special fluid replacement kit, catalog number KA806R2, is available. The kit consists of approximately 60 cc (2 US fl oz.) of the special hydraulic fluid in an eye-dropper bottle.

Replacment

Replacement time-delay kits include a factory calibrated time delay, four flat head screws and a minimum-trip calibration spring. Remove the malfunctioning unit and install the replacement in its place (see Figure 20).

The minimum trip setting of the recloser must be recalibrated by adjusting the spring tension whenever a new time-delay unit is installed.

Removing Mechanism from Head

To gain access to components located in or on the main frame, the-following procedure maybe used to remove the mechanism from the head.

NOTE: These procedures will be simplified if the untanked head and mechanism assembly can be inverted (bushings down). The unit can be supported on its bushings.

1. Disconnect all six bushing leads from the ends of the bushings.
2. Disconnect the lockout lever and contact position indicator shafts by disengaging the spring loaded couplers and locking them in the disengaged position, Figure 21.

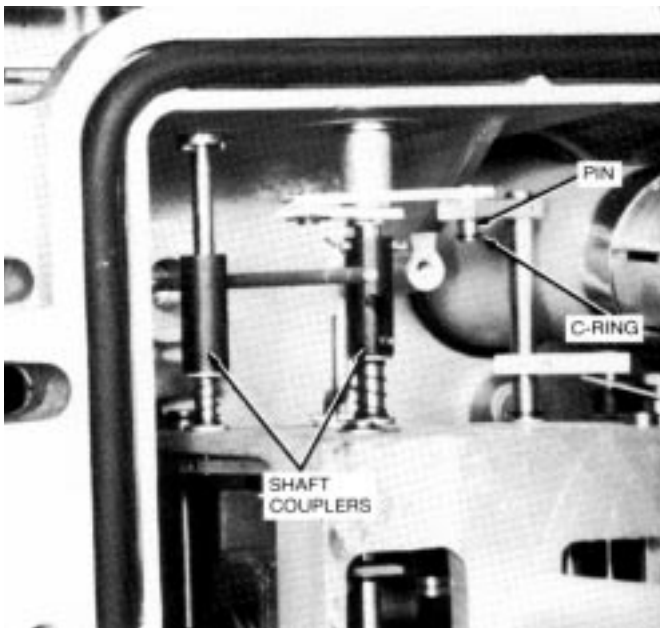

Figure 21. 86830KMA
Disconnect couplers.

3. Disconnect any accessories, such as a ground trip solenoid, at their terminals.

4. If the recloser is equipped with the auxiliary switch accessory, remove the C or E-ring and washer, Figure 22, and disconnect the operating lever of the switch from the recloser mechanism.

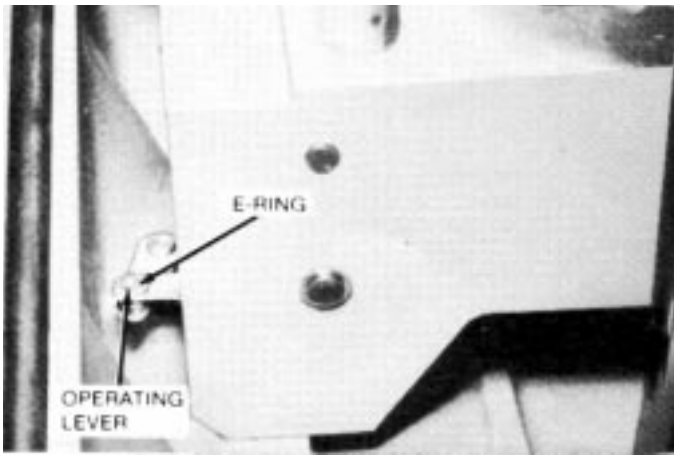

Figure 22. 86831KMA
Remove E-ring to disconnect auxiliary operating lever.

5. Remove the six socket head bolts and lockwashers that secure the frame to the head casting and carefully lift the mechanism from the head. Six long pipe spacers will be released when the mechanism is lifted.

NOTE: By temporarily substituting eye-bolts for two of the hex head bolts in the bottom of the closing solenoid frame, the mechanism can be easily lifted and handled with a hoist (Figure 23).

6. Remove couplers from contact position indicator and lockout lever shafts.

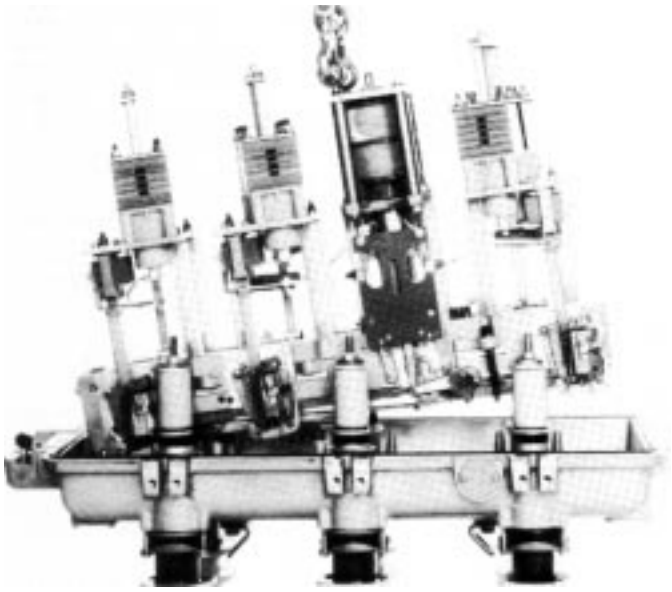

Figure 23. 86831KMA
Lifting mechansim in and out of the head.

Reinstalling Mechanism into Head

To reinstall the recloser mechanism assembly into the head, the following procedure may be used.

1. Install the couplers on the lockout lever and contact position indicator shafts. Lock them in the disengaged position.
2. Carefully lower the mechanism assembly onto the six pipe spacers which have been positioned over the mounting holes in the casting.
3. Install the six socket head bolts and tighten evenly to avoid any binding of the mechanism.

NOTE: Replace the hex head bolts in the bottom of the closing solenoid frame if eye-bolts were used for handling the recloser mechanism (Figure 23)

4. Re-engage the lockout lever and contact position indicator shaft by releasing the shaft couplers.
5. Reconnect the operating lever of the auxiliary switch (if used) to the mechanism and secure with the washer and E-ring (Figure 23).
6. Reconnect the bushing leads to the end of the bushings.

TESTING

Procedures for testing the Type RV and WV reclosers are included in the Installation Manual S280-30-1.

SERVICE PARTS LIST

The service parts and hardware listed and illustrated include only those parts and assemblies usually furnished for repair or involved in the maintenance procedures described in this manual. Further breakdown of listed assemblies is not recommended.

Dimensions of all common hardware parts have been carefully checked so that they may be locally acquired. The suffix letter of the 14 character catalog number for common hardware parts codes the plating of the part:

A - No plating; raw material
H - Silver
M- Black oxide
Q- Cadmium + zinc + chromate
Y - Zinc + chromate
Z - Electro zinc + bronze irridite

A hardware kit, Catalog No. KA849R1, contains an assortment of roll pins, cotter pins, retaining rings, stop nuts, etc.—common hardware parts used in Cooper Power System's reclosers that may not be readily locally available.

To assure correct receipt of any parts order, always include recloser type and serial number. Because of Cooper Power System's continuous improvement policy, there may be instances where the parts furnished may not look exactly the same as the parts ordered. However, they will be completely interchangeable without any rework of the recloser.

All parts carry the same warranty as any whole item of switchgear, i.e. against defects in material or workmanship within a period of one year from date of shipment.

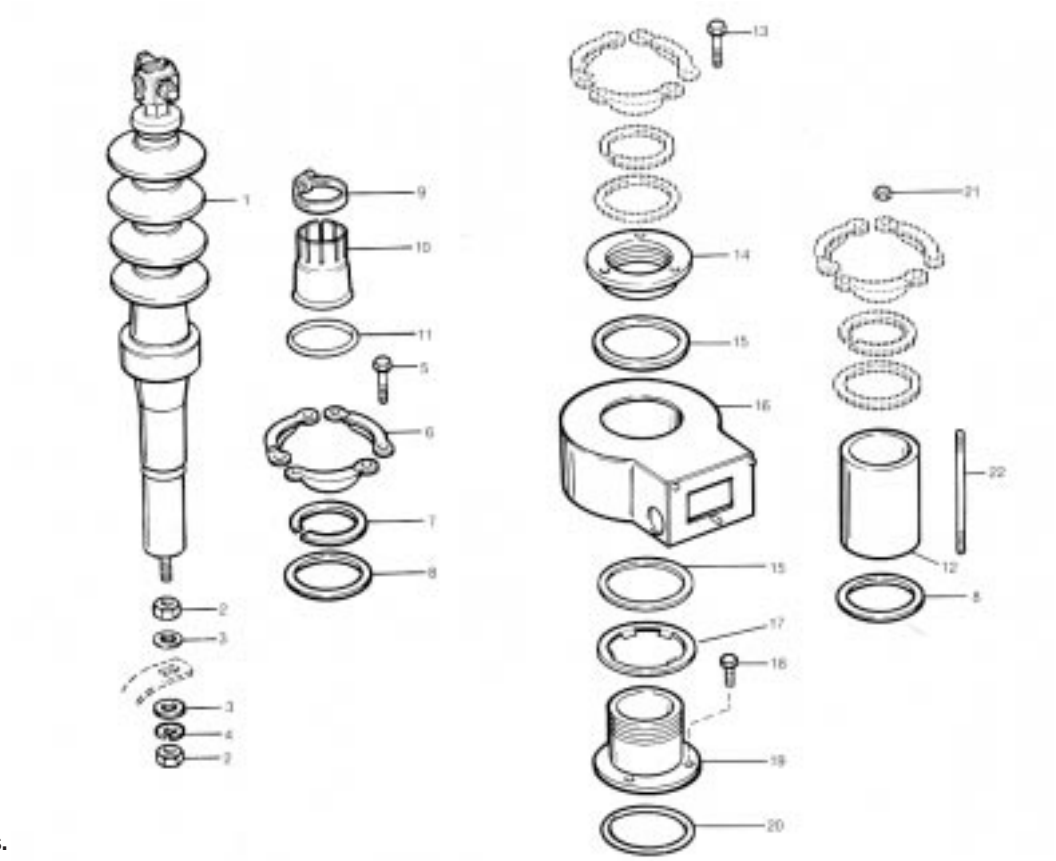

Figure 24.
Bushing Parts.

Bushing Parts (Figure 24)

Item No.	Description	Catalog Number	Qty. Assy.
1	Bushing Assembly Type RV Below Serial No. 9000 (includes: bushing corona shield (10), shield clamp (9), O-ring (11) and conductive gasket (8).		
	Standard bushing	KA899R1	6
	Standard bushing with BCT accy.	KA899R1	6
	Above Serial No. 8999		
	Standard bushing	KA56RV1	6
	Standard bushing with BCT accy.	KA56RV2	6
	Type WV Below Serial No. 1700 (includes: bushing corona shield (10), shield clamp (9), O-ring (11) and conductive gasket (8).		
	Standard bushing	KA841W1	6
	Standard bushing with BCT accy.	KA841W2	6
	Above Serial No. 1699		
	Standard bushing	KA56RV3	6
	Standard bushing with BCT accy.	KA56RV4	6
2	Hex jam nut, 1/2-20, brass	K880725320050H	12
3	Flat washer	KP2028A903	12
4	Split lockwasher, med. 1/2 bronze	K900830050000A	6
5	Capscrew, hex hd, 3/8-16 x 2-1/4, stl.	K730101127225Q	18

Item No.	Description	Catalog Number	Qty. Assy.
6	Bushing clamp	KP1109R	18
7	Clamping ring	KP1111R	6
8	Lower bushing gasket	KA1193R	6
9	Clamp	KP109WV	6
10	Corona shield	KP582RV900	6
11	O-ring	KP2000A19	6
The following parts are applicable to the bushing current transformer accessory.			
12	Bushing spacer	KP275W1	1
13	Capscrew, hex hd, 3/8-16 x 1-7/8, stl.	K730101157187Q	3
14	Transformer clamping flange	KP170W1	1
15	Flange gasket	KP2090A73	2
16	Replacement current transformer		
	600:5 multi-ratio	KA159W1S	1
	1200:5 multi-ratio	KA132W	1
17	CT washer, used with plastic housing CT's	KP312W	1
18	Capscrew, hex hd, 3/8-16 x 1 stl.	K730101137100Q	3
19	Transformer clamping sleeve	K P169W1	1
20	O-ring gasket, used with transformer clamping sleeve that has machined groove. Old style clamping sleeve, without groove, use KP2090A66.	KP2000A64	1
21	Hex nut, 3/8-16, stl.	K880201116037Q	3
22	Stud	KP3149A40	1

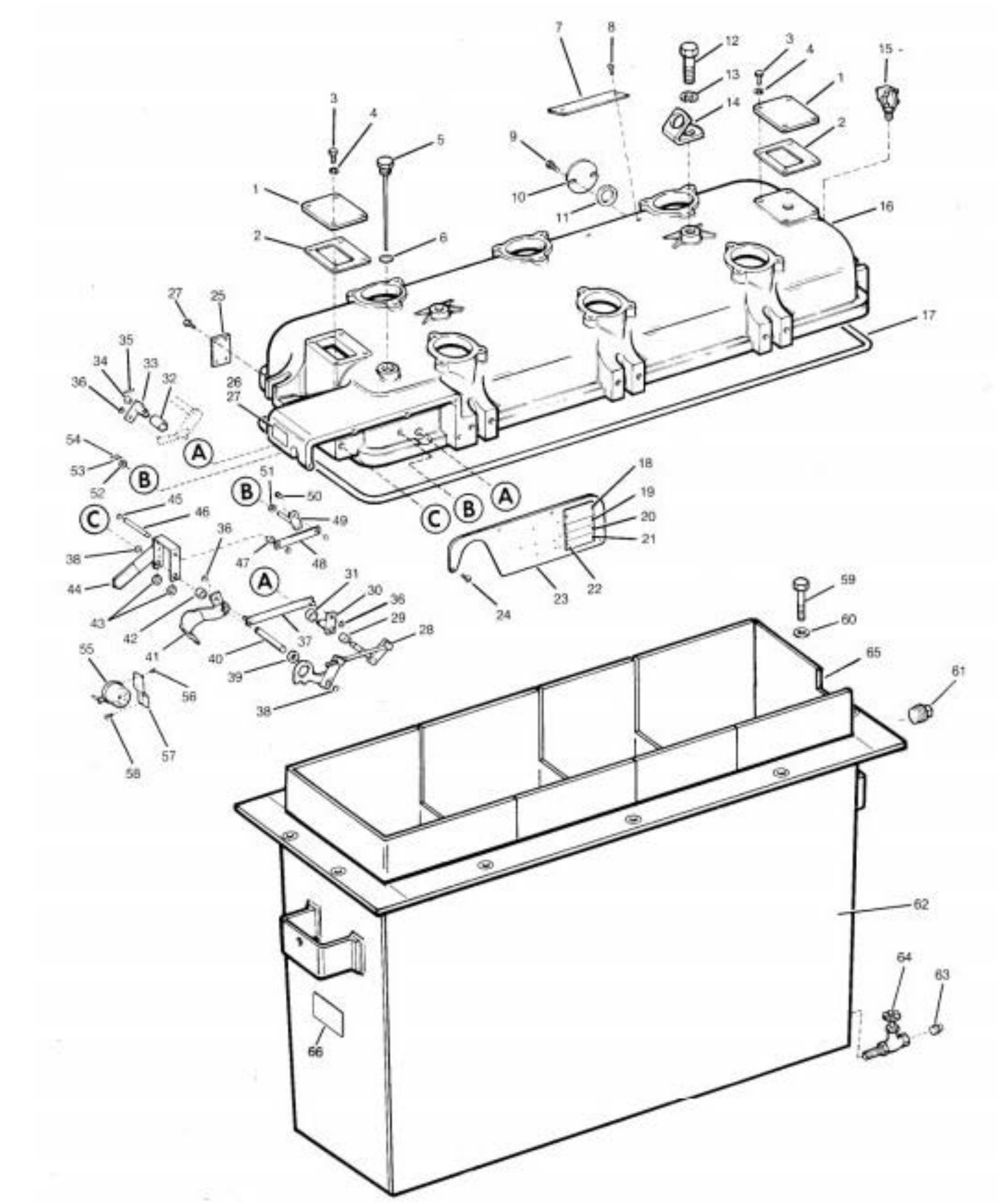

Figure 25.
Head and tank assemblies.

Head and Tank Assemblies (Figure 25)

Item No.	Description	Catalog Number	Quan. Req'd
1	Cover plate	KP609R	2
2	Gasket	KP611R	2
3	Capscrew hex hd, 1/4-20 X 3/4, stl	K730101125075Q	8
4	Split lockwasher, med, 1/4, stl	K900801025000Z	8
5	Dipstick	KA363R	1
6	O-ring gasket	KP2000A9	1
7	Closing coil instruction plate	KP2312R	1
8	Self-tapping screw, Type F, #2 x 3/16. sst	K751515102018A	2
9	Capscrew hex hd, 1/4-20 x 5/8. stl	K730101125062Q	2
10	Manual closing tool access cover plate	KP246R1	1
11	Cover plate gasket	KP2000A12	1
12	Capscrew, hex hd, 5/8-11 x 1-1/2, stl	K730101162150Q	2
13	Split lockwasher, med, 5/8' stl	K900801062000Z	2
14	Lifting lug	KP456H2	2
15	Ground connector	KA392R	1
16	Head casting, includes control shaft bushings	KA840R	1
17	Head gasket	KP2103A8	1
18	Nameplate		
	Type RV	KP564RV	1
	Type WV	KP113WV	1
	Type VWV38	KRW173F	1
19	Voltage data plate	KP567R	1
20	Coil data plate	KP2119A9	1
21	Operating data plate	KP1371R	1
22	Self-tapping screw, Type Z, #4 x 3/16 sst	K801515004018A	8
23	Sleet hood cover plate	K283R	1
24	Thread cutting screw, Type T, #12 x 1/2, sst	K781515112050A	5
25	Contact indicator plate	KP1067R	1
26	Handle designation plate	KP390R	1
27	Self-tapping screw, Type F, 2-56 x 3/16, sst	K751515102018A	4
28	Manual operating handle assembly	KA477R	1
29	Spacer	KP3009A39	1
30	Lever and split shaft assembly	KA313R	1
31	Spacer	KP3011A5	1
32	Spacer	KP3011A7	1

Item No.	Description	Catalog Number	Ouan. Req'd.
33	Lever and split shaft assembly	KA312R	1
34	Retaining ring, Type C, 5/16. stl, WA516	K970901312000M	1
35	Roll pin,1/8x3/4	K970801125075C	1
36	Retaining ring, Type C,1/4 stl WA514	K970801250000M	2
37	One shot link and pin assembly	KA505R	1
38	Retaining ring, Type C, 3/8. stl, WA518	K970801375000M	2
39	Spacer	KP3013A91	1
40	Groove pin	KP3126A4	1
41	One shot handle assembly	KA504R	1
42	Spacer	KP3010A5	1
43	Spacer	KP3013A38	2
44	Indicator and support assembly	KA317R	1
45	Retaining ring, Type C, 3/16, stl, WA510	K970915188000A	3
46	Groove Pin	KP3123A12	1
47	Spacer	K3006A9	1
48	Link	KP1059R	1
49	Shaft and lever assembly	KA319R	1
50	Pin	KP3190A11	1
51	Spacer	KP3007A8	1
52	Flatwasher, #14S brass	K900525026056A	1
53	Cotter pin, 3/32 X 1/2 stl	K970801093050A	1
54	Roll pin, 3/32 X 1/2, stl	K970801093050C	1
55	Counter	KA28C0A2	1
56	Self-tapping screw, Type F, 6-32 x 3/8. sst	K751515106037A	2
57	Bracket	KP1598R	1
58	Self-tapping screw, Type Z #10 x 3/8. sst	K801515010037A	2
59	Capscrew, hex hd, 1/2-13 x 3-1/4, stl	K730101150325Q	10
60	Flatwasher	KP2028A23	10
61	Pipe plug, 1", sq hd	KP2007A4	1
62	Tank	KA88W	1
63	Pipe plug 1/2", sq hd	KP2007A3	1
64	Oil sampling and drain valve assy.	KA809R	1
65	Tank liner kit	KA867R	1
66	Tank data plate	KP200W	1

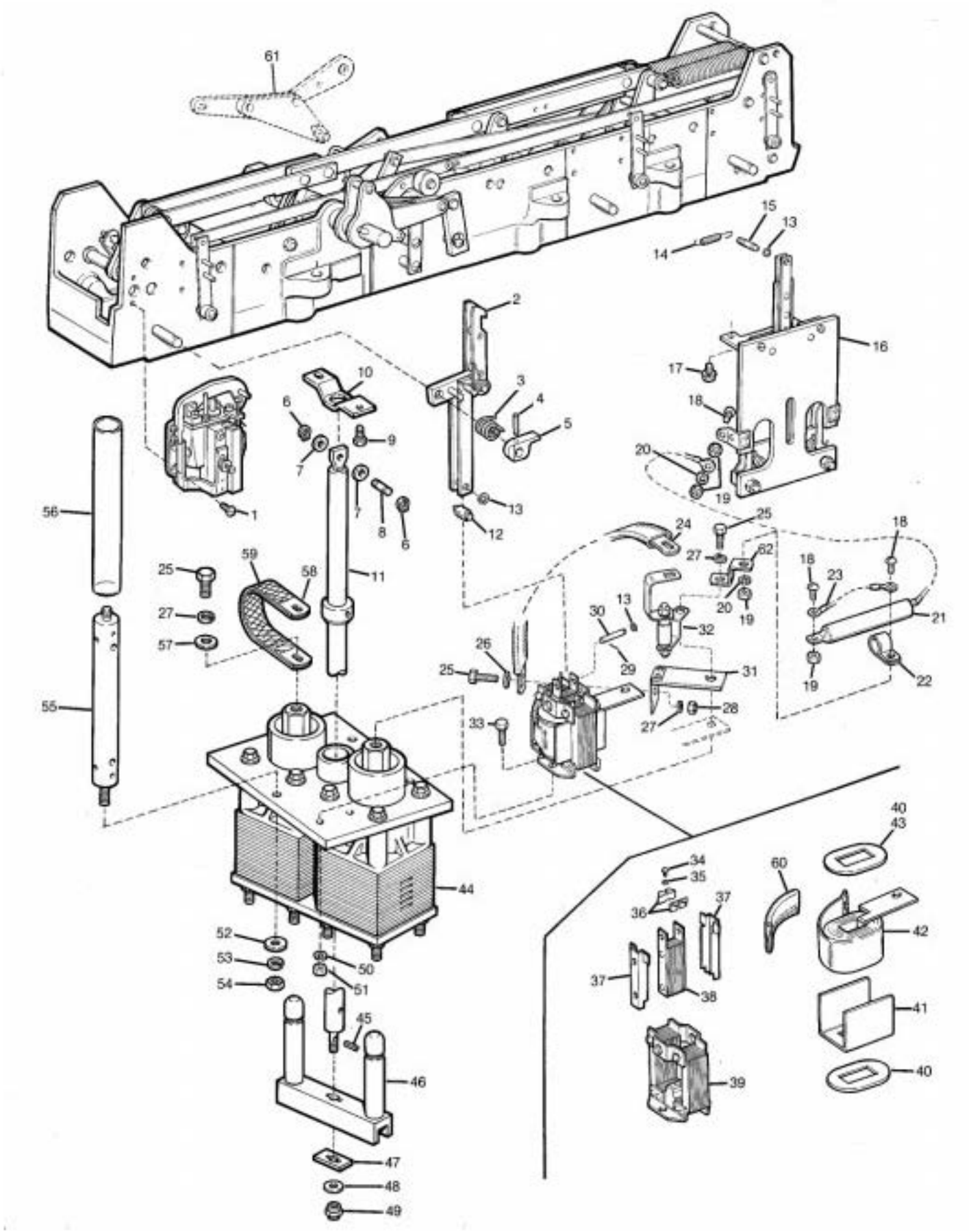

Figure 26.
Trip coil and interrupter mechanisms.

Trip Coil and Interrrupter Mechanisms (Figure 26)

Item No.	Description	Catalog Number	Quan. Req'd.
1	Time-delay unit replacement kit complete (includes attaching screws)		
	For B and C curves	KA1194R1	3
	For D and E curves	KA1194R2	3
2	Trip link assembly, complete	KA161R	3
3	Torsion spring	KP576R	3
4	Roll pin, 1/8 X 3/4, stl	K970801125075M	3
5	Trip lever stop	KP577R	3
6	Retaining ring, Type C, 5/16, stl, WA516	K970901312000M	6
7	Flat washer, 5/16, AN, stl	K900201032056Z	6
8	Groove pin	KP3125A2	3
9	Capscrew with lockwasher 1/4-20 x 1/2, stl	K830101125050A	6
10	Contact rod guide		
	Type RV	KP346W1	3
	Type WV	KP346W2	3
11	Moving contact rod assembly		
	Type RV, phases A & B	KA44RV2	2
	Type RV, phase C	KA44RV1	1
	Type WV, phases A & B		
	Below Serial No. 1300	KA29WV1	2
	Serial No. 1300 and above	KA165W2	2
	Type WV, phase C		
	Below Serial No. 1300	KA29WV1	1
	Serial No. 1300 and above	KA165W1	1
12	Pin	KP517RV	3
13	Retaining ring, Type C,1/4, stl, WA514	K970901250000A	13
14	Contactor toggle spring	KP141R1	2
15	Groove pin	KP1306R	1
16	Closing solenoid contactor	KA430R3	1
17	Capscrew, hex hd, with lock washer,1/4-20 x 1/2, stl	K8830101125050A	3
18	Machine screw, rd hd,1/4-20 x 1/2, brass	K721525125050A	3
19	Hex nut, 1/4-20, brass	K881025120025A	9
20	Split lockwasher, med 1/4 brz	K900830025000A	7
21	Closing coil fuse assembly (also included in closing coil replacement kit, item 36, Figure 27)		2
	2.4-3.3 kv (2 red color bands)	KA259R904	
	4.15-6 kv (black color band)	KA259R901	
	7.2-11 kv (yellow color band)	KA259R902	
	12-14.4 kv, 17.0 kv, 34.5 kv (red color band)	KA259R903	
22	Spacer	KP3009A13	2
23	Capscrew, hex hd,1/4-20 x 1, brass	K730115125100A	2
24	Lead		
	Phase A & B	KP148WE	2
	Phase C	KP149WE	1
25	Hex bolt, 3/8-24 X 7/8, silicon brz	K700133337087A	3
26	Washer, 3/8, brass	K900525039087H	3
27	Lockwasher, 3/8, brz	K900830037000A	9
28	Hex nut 3/8-24, brass	K880725324037H	3
29	Cotter pin, 1/16 X 1/2, stl	K970501062050A	3
30	Pin	KP3114A1	3
31	Capscrew, hex hd, 3/8-24 X 7/8, silver brz	K700122227087A	6
32	Coil gap (used only on coils below 100 amp)		
	Phases A & B	KP13RV2	2
	Phase C	KP13RV1	1

Item No.	Description	Catalog Number	Quan. Req'd.
33	Capscrew, hex hd,1/4-20 x 7/8, stl	K730101125087A	6
34	Self-tapping screw, rd hd, Type F, #2 x 5/16, stl	K751501102031A	6
35	Eyelet	KP1351 R	6
36	Plunger guide	KP622R	6
37	Plunger guide	KP312R	6
38	Plunger assembly	KA604R	3
39	Solenoid frame assembly	KA603R	3
40	Coil washer (see item 43)	KP318R	6 or 3
41	Barrier	KP1684R	3
42	Series coil replacement kit (includes item 20, Figure 25) (Add coil rating as suffix to catalog number)		
	Type RV		
	Phases A & B	KA869R2___	2
	Phase C	KA869R1___	1
	Type WV		
	Phases A & B	KA835W2 ___	2
	Phase C	KA835W1___	1
43	Coil washer (used instead of KP318P on top of 400 and 560 amp coils only)	KP1075R	3
44	Interrupter assembly		
	Type RV		
	Phases A & B	KA49RV2	2
	Phase C	KA49RV1	1
	Type WV		
	Phases A & B below serial no. 1300	KA28WV2	2
	Phase C below serial no. 1300	KA28WV1	1
	Phases A & B serial no. 1300 and above	KA168W2	2
	Phase C serial no. 1300 and above	KA168W1	1
45	Roll pin, 1/8 X 5/8, stl	K970801125062M	3
46	Moving contact assembly		
	Type RV	KA46RV1	3
	Type WV	KA105DV1	3
47	Spacer	KP1505R	3
48	Flat washer, 5/16, stl	K900201031000Z	3
49	Stop nut, 5/16	KP2020A4	3
50	Flat washer, 1/4, stl	K900201025000A	6
51	Stopnut, 1/4-20	KP2020A3	6
52	Flat washer, 3/8, stl	K900201037000A	9
53	Lockwasher, med, 3/8,, stl	K90801037000Z	9
54	Hex nut,3/8-16, stl	K880201116037A	9
55	Stringer assembly	KA62R	9
56	Insulator	KP3230A14	9
57	Flat washer, #24S, brass	K900525039087H	3
58	Lead		
	Type RV (4 per phase)	KP3250A1	12
	Type WV (6 per phase)	KP3250A1	18
59	Spacer	K P3011A39	3
60	Insulator	KP2104A9	3
61	Toggle assembly		1
	Type RV		
	S/N 7399 and below	KA450R3	1
	S/N 7400 and above	KA166W	1
	Type WV		
	S/N 1300 and below	KA450R3	1
	S/N 1301 and above	KA166W	1

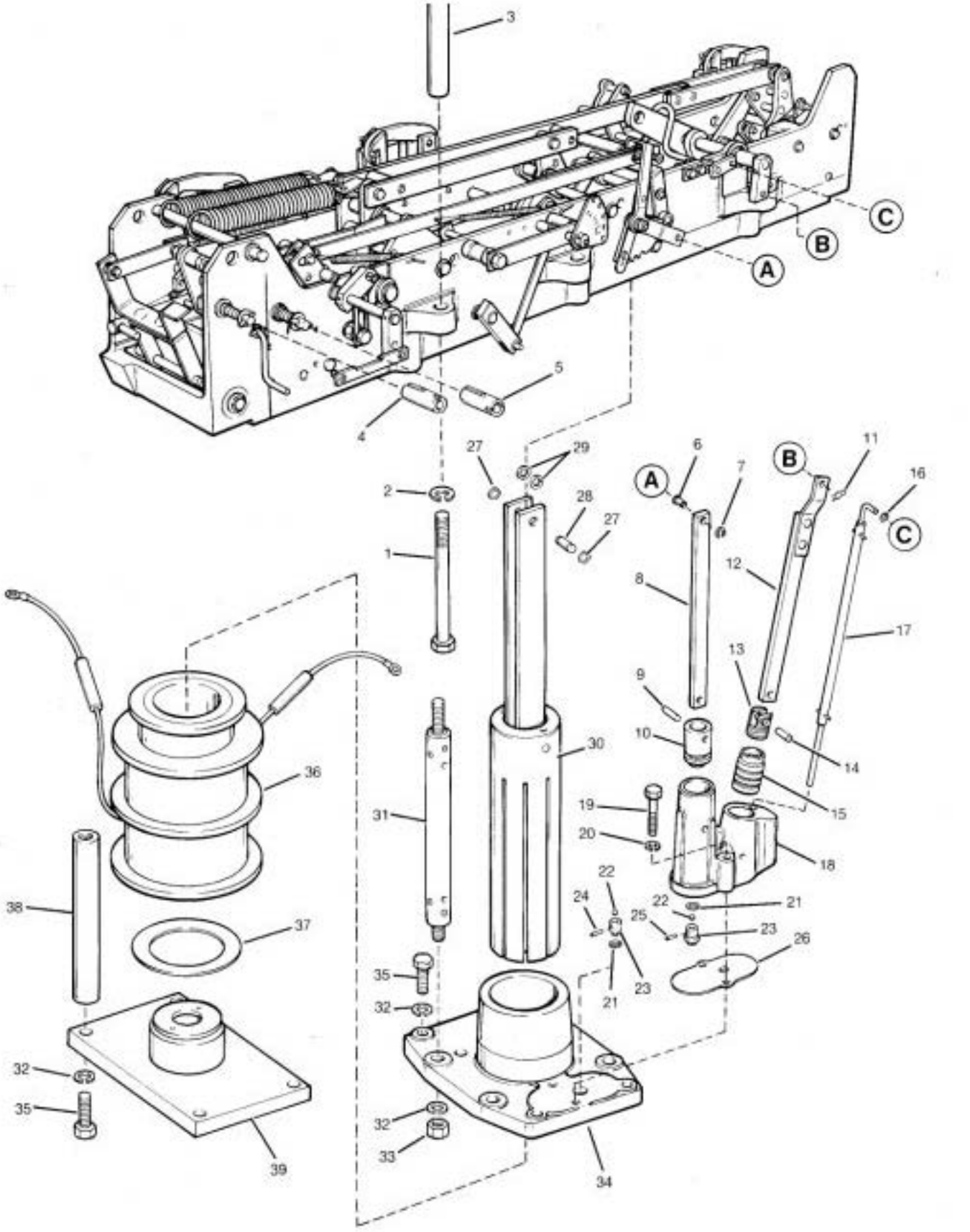

Figure 27.
Closing solenoid and hydraulic control parts.

Closing Solenoid and Hydraulic Contol Parts(Figure 27)

Item No.	Description	Catalog Number	Quan. Req'd.
1	Capscrew, hex socket hd, 1/2-13 x 4-1/2, stl	KP2036A3	6
2	Split lockwasher, med,1/2, stl	K900801050000Z	6
3	Spacer	KP3182A1	6
4	Counter shaft coupler	KP2448R	1
5	Operating lever coupler	KP2447R	1
6	Pivot pin	KP418H	1
7	Retaining ring, Type C, 1/4, stl	K970901250000M	1
8	Lockout piston link	KP122R	1
9	Pin	KP3055A3	1
10	Lockout piston	KP112R	1
11	Spring clip	KP2018A1	1
12	Pump link	KA97R	1
13	Pump piston	KP1733R	1
14	Pin	KP3055A1	1
15	Pump piston shell	KP1732R	1
16	Retaining ring, Type E,1/8", stl	K971001125000A	1
17	Quick reset valve assembly	KA423R	1
18	Pump and lockout piston block	KP1300R	1
19	Capscrew, hex hd,1/4-20 x 1-3/4, stl	K730101125175A	2
20	Split lockwasher, med,1/4, stl	K970801025000A	2
21	O-ring gasket	KP2000A3	2
22	Ball	KP2025A2	2
23	Ball seat	KP155H2	2
24	Ball retainer pin	KP3051A3	1
25	Ball retainer pin	KP3051A1	1
26	Gasket	KP116R	1
27	Retaining ring, Type C, 3/8", stl	K970901312000M	2
28	Groove pin	KP3126A2	1
29	Flat washer, SAE,3/8, stl	K900201037000A	2
30	Plunger and link assembly	KA50R	1
31	Stringer assembly	KA62R	4
32	Split lockwasher, med, 3/8. stl	K900801037000Z	12
33	Hex nut, 3/8-16, stl	K880201116037A	4
34	Solenoid frame	KP100R2	1
35	Capscrew, 3/8-16 x 11/2, stl	K730101137125A	8
36	Closing coil replacement kit (includes closing coil, lower coil gasket 37 (Figure 27) two fuse assemblies 57 (Figure 26), and voltage data plate, 19 Figure 25).		
	2.4 kv	KA834R1	
	3.3 kv	KA834R10	
	4.16-4.8 kv	KA834R2	
	6.0 kv	KA834R6	
	7.2-8.32 kv	KA834R3	
	11.0 kv	KA834R9	
	12.2-13.2 kv	KA834R4	
	14.4 kv	KA834R5	
	17.0 kv	KA834R12	
	20.0 kv	KA834R11	
	23.0-24.9 kv	KA834R13	
	34.5 kv	KA834R14	
	Reclosers with low voltage closing		
	48 vdc	KA834R16*	
	125 vdc	KA834R7*	
	250 vdc	KA834R8*	
37	Solenoid gasket	KP389R	1
38	Solenoid frame post	KP1669R	4
39	Solenoid bridge plate assembly	KA644R3	

* No fuses required with low-voltage dc coils, when converting a recloser to low-voltage operation use the low-voltage contactor and coil kit, P/N KA887R: specify desired operating voltage (Vdc or Vac).

Cooper Power Systems

**Quality from
Cooper Industries**

P.O. Box 2850 • Pittsburgh, PA 15230

COOPER Power Systems

Reclosers

Types VWE, VWVE27, VWVE38X, WE, WVE27, and WVE38X; Three-Phase Electronically Controlled; Installation and Operation Instructions

Service Information

S280-40-2

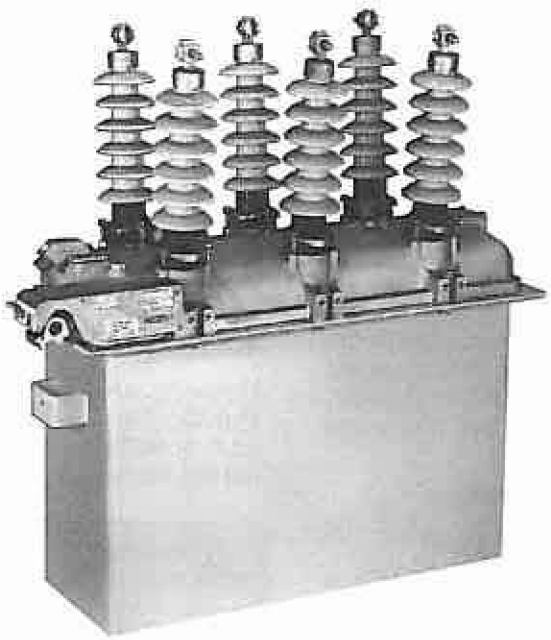

86766KMA

Figure 1.
Typical Kyle® three-phase, electronically controlled automatic circuit recloser.

Contents

Safety Information 2
Hazard Statement Definitions 2
Safety Instructions 2
Product Information 3
Introduction 3
Acceptance and Initial Inspection 3
Handling and Storage 3
Description 3
Manual Operating Handle and Contact Position Indicator 4
Electronic Control 4
Specifications and Ratings 5
Dimensions and Weights 6
Installation Procedure 8
Operation 10
Manual Operation 10
Initial Operation 10
Automatic Operation 10
Control Lockout 11
Cold-Load Pickup 11
Testing 12
Testing Vacuum Interrupters VWE, VWVE27, andVWVE38X Reclosers 12
Safety Requirements 12
Untanking the Recloser 12
Accessories 13
Bushing-Type Multi-Ratio Current Transformers 13
Auxiliary Switch 14
Low-Voltage Dc Closing 16
Low-Voltage Ac Closing 16
CT Power Source for Battery Charger 17
Manual Closing Tools 17
Maintenance Information 18

SAFETY FOR LIFE

Cooper Power Systems products meet or exceed all applicable industry standards relating to product safety. We actively promote safe practices in the use and maintenance of our products through our service literature, instructional training programs, and the continuous efforts of all Cooper Power Systems employees involved in product design, manufacture, marketing, and service.

We strongly urge that you always follow all locally approved safety procedures and safety instructions when working around high voltage lines and equipment and support our "Safety For Life" mission.

SAFETY INFORMATION

The instructions in this manual are not intended as a substitute for proper training or adequate experience in the safe operation of the equipment described. Only competent technicians, who are familiar with this equipment should install, operate, and service it.

A competent technician has these qualifications:

- *Is thoroughly familiar with these instructions.*
- *Is trained in industry-accepted high- and low-voltage safe operating practices and procedures.*
- *Is trained and authorized to energize, de-energize, clear, and ground power distribution equipment.*
- *Is trained in the care and use of protective equipment such as flash clothing, safety glasses, face shield, hard hat, rubber gloves, hotstick, etc.*

Following is important safety information. For safe installation and operation of this equipment, be sure to read and understand all cautions and warnings.

Hazard Statement Definitions

This manual may contain four types of hazard statements:

DANGER: Indicates an imminently hazardous situation which, if not avoided, will result in death or serious injury.

WARNING: Indicates a potentially hazardous situation which, if not avoided, could result in death or serious injury.

CAUTION: Indicates a potentially hazardous situation which, if not avoided, may result in minor or moderate injury.

CAUTION: Indicates a potentially hazardous situation which, if not avoided, may result in equipment damage only.

Safety Instructions

Following are general caution and warning statements that apply to this equipment. Additional statements, related to specific tasks and procedures, are located throughout the manual.

DANGER: Hazardous voltage. Contact with hazardous voltage will cause death or severe personal injury. Follow all locally approved safety procedures when working around high voltage lines and equipment. G103.3

WARNING: Before installing, operating, maintaining, or testing this equipment, carefully read and understand the contents of this manual. Improper operation, handling or maintenance can result in death, severe personal injury, and equipment damage. G101.0

WARNING: This equipment is not intended to protect human life. Follow all locally approved procedures and safety practices when installing or operating this equipment. Failure to comply can result in death, severe personal injury and equipment damage. G102.1

WARNING: Power distribution equipment must be properly selected for the intended application. It must be installed and serviced by competent personnel who have been trained and understand proper safety prodedures. These instructions are written for such personnel and are not a substitute for adequate training and experience in safety procedures. Failure to properly select, install or maintain power distribution equipment can result in death, severe personal injury, and equipment damage. G122.2

PRODUCT INFORMATION

Introduction

Service Information S280-40-2 provides installation instructions and operation information for the Kyle® three-phase, electronically controlled W-group reclosers.

The information contained in this manual is organized into the following major categories: *Safety Information, Product Information, Specifications and Ratings, Dimensions and Weights, Installation Procedure, Operation, Testing, Accessories, and Maintenance Information.* Refer to the table of contents for page numbers.

Read This Manual First

Read and understand the contents of this manual and follow all locally approved procedures and safety practices before installing or operating this equipment. This recloser is used in conjunction with a Kyle electronic recloser control. If used with a Form 3A Type ME control, refer to *Service Information S280-75-1.* If used with a Form 4C control, refer to *Service Information S280-77-1.* If used with an FXA or FXB control, refer to *Service Information S280-78-1.* If used with a Form 5 control, refer to *Service Information S280-79-10.* If used with a Form 5 LS/UDP control, refer to *Service Information S280-79-12.* If used with a Form 6 rack mount control, refer to *Service Information S280-70-1.* If used with a Form 6 yard mount control, refer to *Service Information S280-70-2.* If used with a Form 6 pole mount control, refer to *Service Information S280-70-3.*

Additional Information

These instructions cannot cover all details or variations in the equipment, procedures, or processes described nor provide directions for meeting every possible contingency during installation, operation, or maintenance. For additional information, please contact your Cooper Power Systems sales representative.

Acceptance and Initial Inspection

Each recloser is completely assembled, tested, and inspected at the factory. It is carefully calibrated, adjusted, and filled to the correct level with insulating oil. It is in good condition when accepted by the carrier for shipment.

Upon receipt, inspect the recloser thoroughly for damage and loss of parts or oil incurred during shipment. If damage is discovered, file a claim with the carrier immediately.

Check for oil leakage and tighten all bolts that may have loosened during shipment, especially the tank mounting bolts. Tank mounting bolts should be tightened to 25–40 ft-lbs. torque.

Handling and Storage

Be careful during handling and storage to minimize the possibility of damage; in particular, protect the bushings and control equipment. If the unit is to be stored for any length of time prior to installation, provide a clean, dry storage area.

Description

The recloser (Figure 1) with its electronic control senses distribution system overcurrents and interrupts the circuit to clear faults. It automatically recloses to restore service if a fault is temporary. Several attempts may be made to clear and re-energize the circuit, and, if the fault still exists, the recloser locks out.

Recloser Operation

The opening sequences of the recloser can be all fast, all delayed, or any combination of fast followed by delayed up to a total of four. Fast operations clear temporary faults before branch line fuses are weakened. Delayed operations allow time for downline protective devices to clear so that permanent faults can be confined to smaller sections of the system.

A complete electronic recloser package consists of the recloser which interrupts the circuit, an electronic control which senses overcurrents and actuates the recloser, and an interconnecting control cable.

Oil Interrupters and Vacuum Interrupters

Oil interrupters are used in WE, WVE27, and WVE38X reclosers. Vacuum interrupters are used in VWE, VWVE27, and VWVE38X reclosers. All are oil-insulated.

Tripping and Closing

Recloser tripping and closing operations are initiated by signals from the electronic control. When fault currents in excess of the programmed minimum-trip value are detected in one or more phases, a signal from the control actuates a solenoid in the operating mechanism of the recloser to trip the opening springs and open the interrupter contacts.

Closing energy and the force required to charge the opening springs is supplied by a closing solenoid energized by line voltage from the source side of the recloser. A number of high-voltage coils are available for the closing solenoid to cover the range of the rated nominal system voltage of the recloser. Also available are low-voltage coils to energize the closing solenoid from either an ac or dc 120- or 240-volt source. At the programmed reclosing time, the control energizes a rotary solenoid in the operating mechanism that closes the closing solenoid contactor to connect the closing coil to its power source.

Manual Operating Handle and Contact Position Indicator

A yellow manual trip-and-reset handle (Figure 2), located under the sleet hood, is linked to the trip mechanism. It can be used to manually trip the recloser and override the control to keep the recloser open. It cannot manually close the recloser, but must be in the closed position (up) before the rotary solenoid can be energized.

A contact-position indicator–a red flag labeled OPEN–also linked to the interrupter mechanism, but independent of the yellow handle, drops down from under the sleet hood when the interrupter contacts are open.

WARNING: Hazardous voltage. Do not rely on the open position of the yellow operating handle or the contact position indicator; it does not ensure that the line has been de-energized. Always establish a visible disconnect. Failure to follow proper safety procedures can result in contact with high voltage, which will cause death or severe personal injury. G114.1

Figure 2. 6Z277KMD
Manual trip and reset handle and contact position indicator are located under the sleet hood.

Electronic Control

Line current flow is sensed by current transformers mounted on the source-side bushings under the head of the recloser. When current in excess of the minimum trip value is detected, the control initiates the programmed sequence of operations and provides the trip and close signals to the recloser.

Installation Manuals For Controls

Installation and programming instructions and procedures for checking the control are provided in separate instruction manuals furnished with the control.

- *S280-75-1, Type ME Electronic Control, Form 3A, Installation, Setting, and Testing Instructions*
- *S280-77-1, Form 4C Type ME Microprocessor-Based Recloser Control Installation, Operation, and Programming Instructions*
- *S280-77-4 Kyle Form 4C Microprocessor-Based Recloser Control Programming Guide*
- *S280-78-1, Type FXA and FXB Microprocessor-Based Recloser Control Installation, Operation, and Maintenance Instructions*
- *S280-78-2 Types FX, FXA, and FXB Microprocessor-based Recloser Controls Programmer's Software User's Manual*
- *S280-78-3 Kyle Type FXB Microprocessor-Based Electronic Recloser Control Front Panel Programming Instructions*
- *S280-79-10 Kyle Form 5, Form 5 UDP, Form 5 DC NOVA Microprocessor-Based Recloser Controls Installation and Operation Instructions*
- *S280-79-12 Kyle Form 5 LS/UDP and Form 5 LS/UDP DC NOVA Microprocessor-Based Recloser Controls Installation and Operation Instructions*
- *S280-79-2 Form 5 Microprocessor-Based Recloser Control Programming Guide*
- *S280-70-1 Form 6 Microprocessor-Based Rack Mount Recloser Control Installation and Operation Instructions*
- *S280-70-2 Form 6 Microprocessor-Based Yard Mount Recloser Control Installation and Operation Instructions*
- *S280-70-3 Form 6 Microprocessor-Based Pole Mount Recloser Control Installation and Operation Instructions*
- *S280-70-4 Kyle Form 6 Microprocessor-Based Recloser Control Programming Guide*

SPECIFICATIONS AND RATINGS

Check Recloser Ratings Prior To Installation

The recloser will effectively interrupt fault currents only when applied within its specified ratings. Check data plate ratings and compare with the system characteristics at the point of application, prior to installation. Tables 1, 2, and 3 list the specifications and ratings for W-group electronically controlled three-phase reclosers.

ANSI Standards

W-group reclosers are designed and tested in accordance with the following ANSI standards: C37.60, C37.85 and meets the guidelines of C37.61 *Application, Operation, and Maintenance of Automatic Circuit Reclosers Guide.*

ISO Standards

The Quality System at the Cooper Power Systems Kyle Distribution Switchgear plant is ISO 9001 certified.

TABLE 1
Electrical Ratings

Description	WE, VWE	WVE27	VWVE27	VWVE38X	WVE38X
Nominal system voltage (kV)	14.4	24.9	24.9	34.5	34.5
Maximum rated voltage (kV)	15.5	27	27	38	38
Rated impulse withstand voltage (BIL)(kV crest)	110	150	125**	150	170
60 Hz withstand voltage (kV rms)					
Dry, one min.	50	60	60	70	70
Wet, ten sec.	45	50	50	60	60
Rated maximum continuous current (amps)	560*	560*	560*	560*	560*
Bushing creepage distance (in)	13 or 17†	26½	26½	26½	26½

* Extendable to 800 amps with accessory.
** Extendable to 150 kV BIL with accessory
† 17 inch extra-creepage bushing accessory

TABLE 2
Interrupting Ratings

Type	Maximum Continuous Current (amps)	Interrupting Ratings (rms symmetrical amps)	Voltage (kV)
WE	560*	12000	4.8
WE	560*	10000	14.4
VWE	560*	12000	14.4
VWVE27	560*	12000	24.9
WVE27	560*	8000	24.9
WVE38X	560*	8000	34.5
VWVE38X	560*	12000	34.5

*Continuous current rating can be extended to 800 amps with an accessory.

TABLE 3
Duty Cycle

Type	% of Interrupting Rating	No. of Unit Operations	Maximum Circuit X/R Value
WE	15-20	28	3
	45-55	20	7
	90-100	10	14
		Total 58	
VWE	15-20	88	4
	45-55	112	8
	90-100	32	15
		Total 232	
WVE27	15-20	28	4
WVE38X	45-55	20	8
	90-100	10	15
		Total 58	
VWVE27	15-20	88	4
VWVE38X	45-55	112	8
	90-100	32	15
		Total 232	

DIMENSIONS AND WEIGHTS

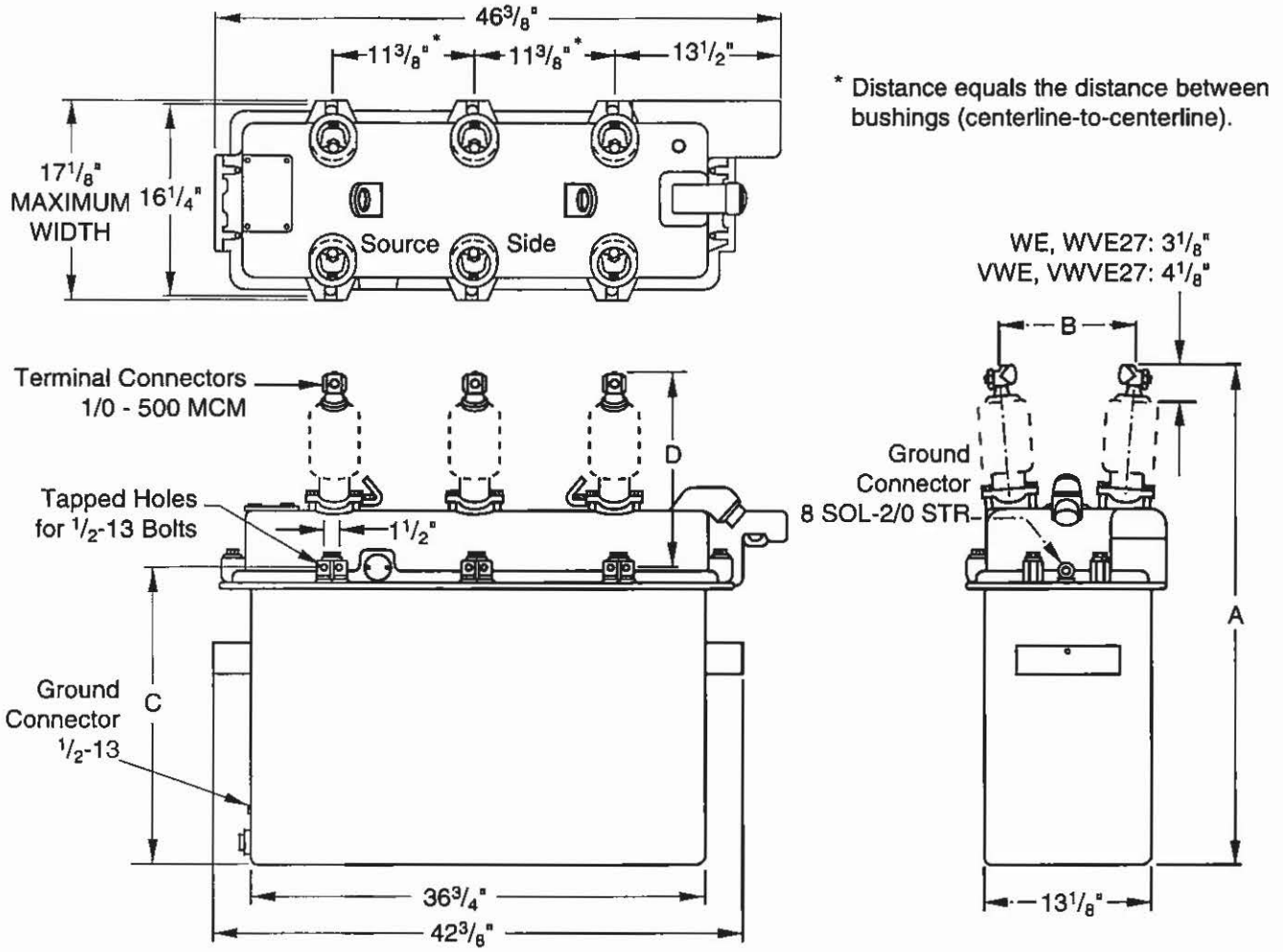

Dimensions of Recloser Without BCT Accessory*

Type	Bushing Type	A (In.)	B (In.)	C (In.)	D (In.)
WE VWE	13 in. standard creepage or 17 in. extra creepage	41⅝ 43⅞	11⅛ 11⅛	26⅝ 28⅞	15 15
WVE27 VWVE27	26½ in. creepage 26½ in. creepage	47¾ 50	11¾ 11¾	26⅝ 28⅞	21⅛ 21⅛

*Dimensions configured to the nearest ⅛ in.

Dimensions of Recloser With BCT Accessory*

Type	Bushing Type	A (In.)	B (In.)	C (In.)	D (In.)
WE VWE	13 in. standard creepage or 17 in. extra creepage	46⅜ 48⅝	11⅞ 11⅞	26⅝ 28⅞	19¾ 19¾
WVE27 VWVE27	26½ in. creepage 26½ in. creepage	52½ 54¾	12⅝ 12⅝	26⅝ 28⅞	25⅞ 25⅞

*Dimensions configured to the nearest ⅛ in.

Figure 3.
Dimensions of Types WE, VWE, WVE27, and VWVE27 reclosers with and without the bushing current transformer accessory.

TABLE 4
Weights and Oil Capacity

	WE	VWE	WVE27	VWVE27	WVE38X	VWVE38X
Weight with oil (lb)* Oil capacity (gal)	790 38	790 45	840 38	830 45	990 52	990 61

*Does not include the weight of the recloser control or accessory BCT's. Add 25 lbs. for each BCT.

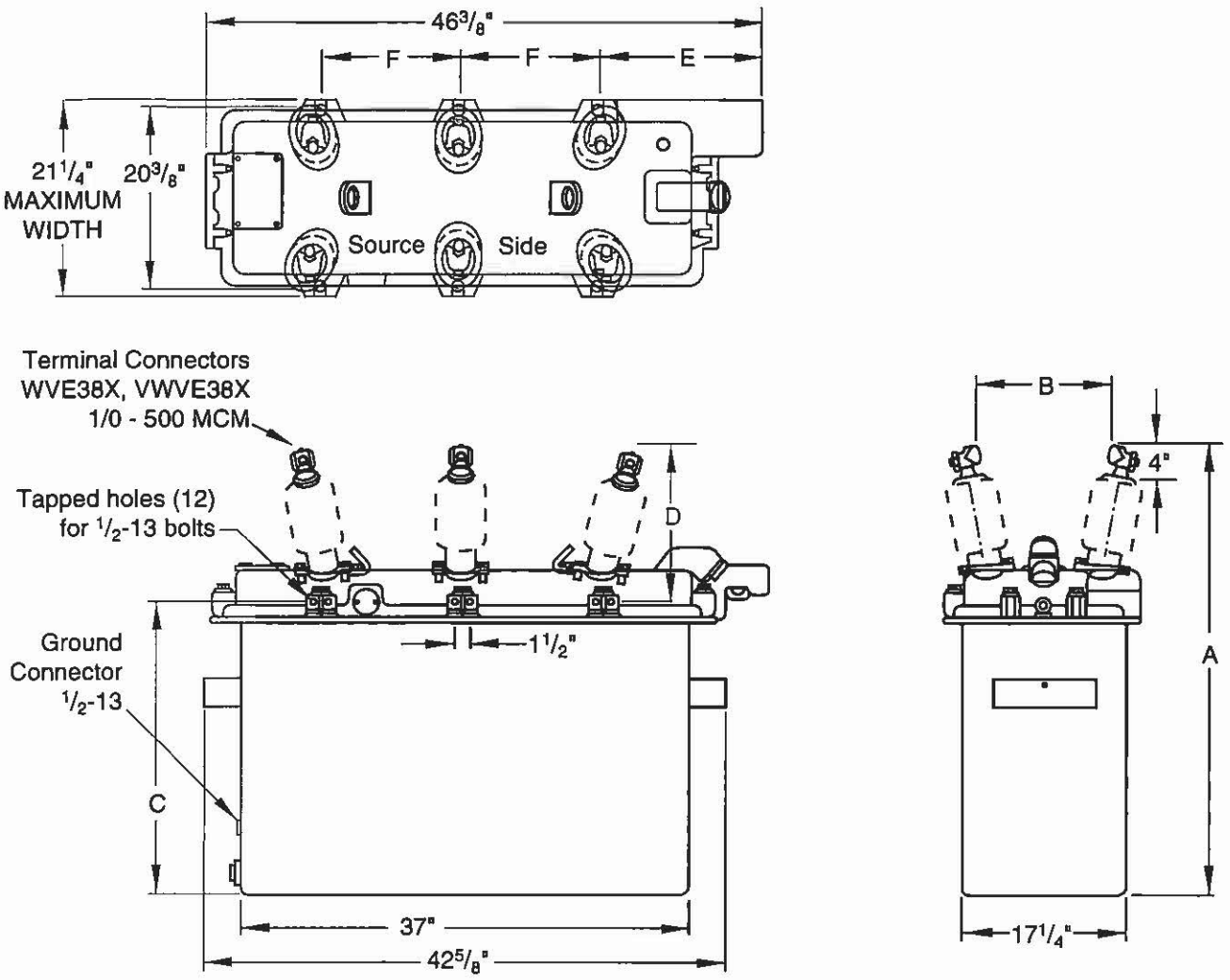

Dimensions of Recloser With and Without BCT Accessory*

Type	Bushing Type	A (In.)	B (In.)	C (In.)	D (In.)	E (In.)	F** (In.)
WVE38X	26½ in. creepage	47⅛	15	26⅝	20½	10	15⅛
VWVE38X	26½ in. creepage	49⅜	15	28⅞	20½	10	15⅛
WVE38X	26½ in. w/ BCT	51¾	15⅞	26⅝	25⅛	9½	15⅝
VWVE38X	26½ in. w/ BCT	54	15⅞	28⅞	25⅛	9½	15⅝

* Dimensions configured to the nearest ⅛ in.
** Dimension F is the distance between bushings (centerline-to-centerline).

Figure 4.
Dimensions of Types WVE38X and VWVE38X reclosers with and without the bushing current transformer accessory.

INSTALLATION PROCEDURE

This recloser is used in conjunction with a Kyle electronic recloser control. When installing the recloser, refer to the applicable recloser mounting frame instructions. Installation instructions are included with the mounting frame.

WARNING: This equipment is not intended to protect human life. Follow all locally approved procedures and safety practices when installing or operating this equipment. Failure to comply can result in death, severe personal injury and equipment damage. G102.1

CAUTION: This equipment relies on oil to provide electrical insulation between components. The dielectric strength of the oil must be checked on a regular basis, as part of the routine maintenance inspection, to ensure that it is at or above minimum dielectric requirements. Use of this equipment with insulating oil that does not meet minimum requirements can result in internal flashovers that will damage the equipment and can cause personal injury. G107.2

1. **Check the oil level** before putting the recloser into service. Using the dipstick provided on the recloser head, make sure the oil in the recloser tank is at the proper level (Figure 5). If the oil is below the minimum level, fill the recloser with oil to the proper level using the dipstick hole. Do not exceed the maximum oil level, as indicated by the dipstick.

   Note: If the recloser is equipped with an oil-sight gauge, the oil level should be above the sight gauge window. If the oil line is visible in the window, add oil to raise the level to the upper line on the dipstick.

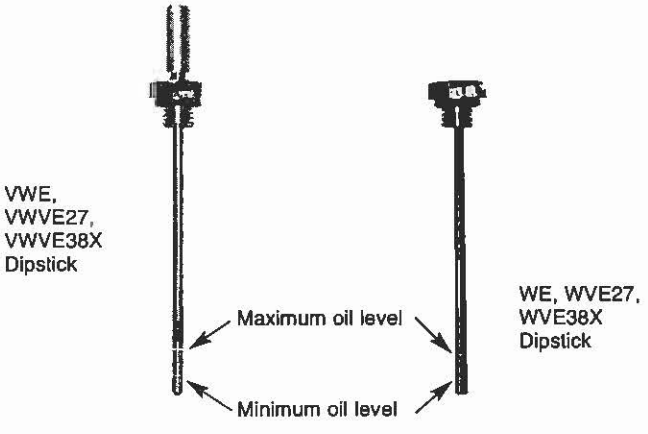

Figure 5.
W-Group oil dipsticks.

WARNING: Do not operate this equipment out of oil. Oil is the electrical insulating medium within this equipment; operation out of oil will result in internal flashovers that will damage the equipment and can cause death or severe personal injury. G104.2

2. **Test the oil dielectric strength.** Perform a dielectric test on the oil in accordance with ASTM-approved testing procedures.
   - **A.** On new equipment, the oil must have a minimum dielectric strength of 26 kV.
   - **B.** If the dielectric strength of the oil is less than 26 kV, filter the oil to restore the dielectric strength to the acceptable minimum level.
3. **Check the data plate ratings.** Make sure the ratings on the recloser data plates are correct for the planned installation.
4. **Mount the recloser.**

Kyle mounting frames should always be used; refer to the instructions accompanying that equipment.

CAUTION: Follow all approved safety practices when lifting and mounting the recloser. Use the lifting lugs provided in the recloser housing. Lift the unit smoothly and do not allow the unit to shift. Improper lifting can result in equipment damage. G106.2

Lifting a Recloser

Follow all approved safety practices when making hitches and lifting the equipment. Lift the unit smoothly and do not allow the unit to shift.

This recloser has two lifting lugs - both must be used when lifting. Maximum strength is attained with a vertical lift attached to the lugs. Use a spreader bar with a fixed attachment point for the hook at the load center.

If a sling is used for lifting the recloser, it must have a fixed attachment point at the load center. Rig the recloser so that the sling height is equal to - or greater than - the distance between lifting lugs.

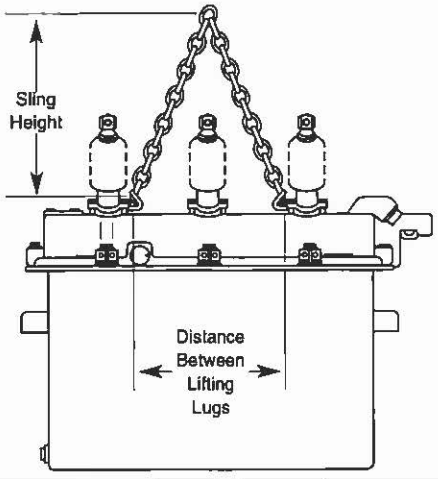

5. **Program and install the control.** Refer to the control installation manual and install the control. Connect the control battery. Make sure that the control is properly programmed for the planned installation and that the control cable is connected between the recloser and control.
6. **Ground the recloser.** Make the ground connection to the recloser head and to the recloser control (Figure 6).

WARNING: Hazardous voltage. Solidly ground all equipment. Failure to comply can result in death, severe personal injury, and equipment damage. T223.2

IMPORTANT: High-Voltage Closing Solenoid. To energize the closing solenoid, the source leads must be connected to terminals 1, 3, and 5 marked SOURCE on the head casting. Bushings connected to the closing solenoid are identified on the head casting.

7. **Make high-voltage line connections** (Figure 7).

   Note: The six disconnect switches and three bypass switches are not required, but they do facilitate maintenance.

   A. Connect high-voltage lines to recloser bushing terminals (Figure 7). The universal clamp-type terminals for main line connections accept 1/0- through 500-MCM cables.

   B. Provide surge arrester protection. Surge arrester protection should be provided on at least one side.

   - **Substation-mounted reclosers**

     Connect the surge arresters on the load side.

   - **Line-mounted reclosers**

     Connect surge arresters on both the source-side and the load-side. If only one set of surge arresters is used, the arresters should be connected to the source-side of the recloser.

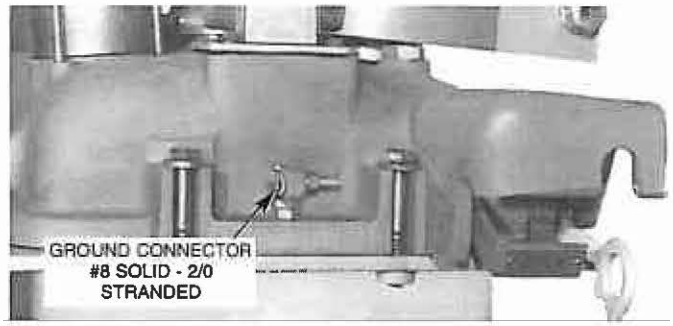

82277KMA

Figure 6.
Ground connector on recloser head.

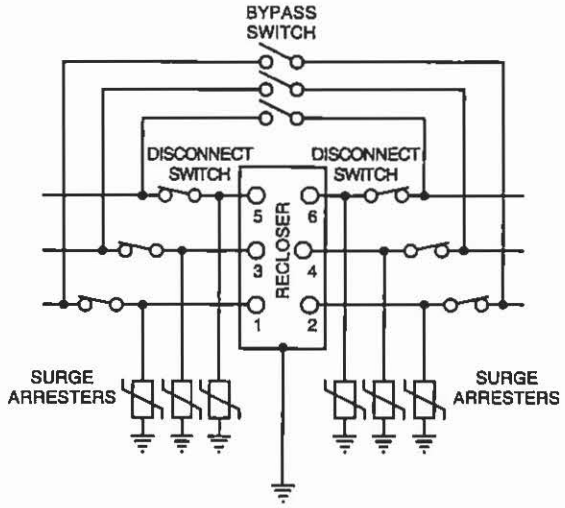

Figure 7.
Connection diagram shows complete surge protection and illustrates switches to facilitate maintenance.

OPERATION

Manual Operation

Manual Operation From The Control Panel

To close recloser:

1. Move manual control switch to the TRIP position.
2. Move yellow trip-reset handle on recloser up to its CLOSED position.
3. Make sure high-voltage source lines are energized, providing power to the closing solenoid if recloser has high-voltage closing solenoid.

CAUTION: To prevent blowing the control fuse, on a Form 3A control that is not equipped with a fuse elimination accessory, the high-voltage source lines must be energized before operating the control's Manual Control Switch to the CLOSE position. G225.0

CAUTION: Equipment damage. Never operate the Manual Control Switch of any type of Kyle recloser control to the CLOSE position while the recloser is operating to lockout. The recloser will trip instantaneously and then start through a complete new sequence to lockout. If this should occur under high fault current conditions, the additional operations could cause damage to the recloser and result in possible personal injury. T245.0

4. Move manual control switch to CLOSE. Recloser should close immediately.

To open the recloser and lock out the control:

Move the manual control switch, on control panel, to TRIP. The recloser will open and the control will lock out.

Manual Operation At The Recloser

To open the recloser:

Pull down the yellow manual trip-reset handle located under the recloser sleet hood. Then operate the manual control switch to TRIP position.

To close the recloser:

Manual closing is normally accomplished from the control panel on the electronic control.

Note: The yellow trip-reset handle must be returned to the CLOSED position to permit recloser closing. If the control is in a closed condition when the yellow handle is moved up, the recloser will close.

The following closing procedure will ensure that the recloser and Form 3A control are synchronized, following an opening operation at the recloser (this procedure does not apply to a recloser connected to a Form 4C, FXA, FXB, Form 5, or Form 6 control, as the control automatically adjusts itself to the state of the recloser):

1. Move manual control switch, on operator control panel, to TRIP and release.
2. Return yellow handle on recloser to the up (CLOSED) position.
3. Move manual control switch, on operator control panel, to CLOSE and release. Recloser will close if source lines are energized at rated voltage.

Note: If recloser is equipped with the low-voltage closing accessory, proper voltage will have to be supplied to that circuit to accomplish closing.

Initial Operation

With the electronic control connected and energized and with the source lines energized, perform the following steps to place the recloser in service:

1. Operate the manual control switch, on the operator panel, to TRIP.
2. Set switches to NORMAL (unless altered operation is desired).
3. Move the yellow trip-reset handle, under the recloser sleet hood, to its CLOSED position.
4. Move the manual control switch, on operator control panel, to CLOSE.
5. Open the bypass switches or perform the equivalent operation with jumper switches if these are used instead of disconnect and bypass switches.

Automatic Operation

Once closed and in service, the electronic control will automatically cause trip and reclosing operations as programmed by the control. If the control sequences to lockout, the recloser will remain open (the red indicator blade under the sleet hood is in the down position) until the control is manually operated to close.

The control can be set for non-reclosing operation on the control panel: NORMAL RECLOSING to NON-RECLOSING. If a fault occurs, the control will operate to lockout after the first tripping operation.

Ground-trip operation can be blocked via the control panel: NORMAL to GROUND TRIP BLOCK.

Control Lockout

Indication of control lockout is provided on the control front panel when the recloser sequences to lockout or is manually or supervisory tripped to lockout.

To place recloser back in service after the control has locked out:

Move the manual control switch or depress the CLOSE pushbutton on the control panel to CLOSE. The recloser will close immediately, and, if a fault still exists, the control will perform the programmed number of operations to lockout.

Cold-Load Pickup

When closing in after an extended outage, the cold-load inrush current or magnetizing inrush current may be great enough to trip the recloser. Provisions for cold-load pickup are built into the electronic control. Tripping on cold-load pickup generally can be prevented by the following procedure:

1. Set the ground-trip and recloser operating mode switches on the control according to local utility standard startup practices.
2. Move the manual control switch to CLOSE and hold. With the switch held on CLOSE, the recloser will close in and the control will operate on the programmed delayed phase-trip and ground-trip timing characteristics.

   Should a fault be present on the line during the cold-load pickup procedure, the control will operate the recloser on the delayed timing characteristic once and lock out (if set in the NON-RECLOSING operating mode) or for a sequence of all delayed operations to lockout (if set in the NORMAL RECLOSING operating mode).
3. Release the manual control switch, letting it return to the center position.

TESTING

All reclosers are carefully tested and adjusted at the factory to operate according to published data. Well-equipped test facilities, a detailed testing procedure, and thoroughly trained personnel assure accurately calibrated equipment. Each recloser leaves the factory ready for installation.

Pre-installation testing is not necessary. However, should verification of recloser operation prior to installation be required, refer to the control installation instructions or to the applicable maintenance manual (listed in Table 8).

Testing Vacuum Interrupters in VWE, VWVE27, and VWVE38X Reclosers

To check the vacuum integrity of the interrupters in VWE, VWVE27, and VWVE38X reclosers, the following procedure can be used. Refer to the applicable maintenance manual (listed in Table 8) for additional information on this and other testing procedures.

Safety Requirements

To prevent accidental contact with high-voltage parts, the recloser and high-voltage transformer must be placed in a test cage and all proper grounding procedures must be observed.

WARNING: Hazardous voltage. The switchgear and high voltage transformer must be in a test cage or similar protective device to prevent accidental contact with the high voltage parts. Solidly ground all equipment. Failure to comply can result in death, severe personal injury, and equipment damage. T221.3

CAUTION: Radiation. At voltages up to the specified test voltages, the radiation emitted by the vacuum interrupter is negligible. However, above these voltages, radiation injurious to personnel can be emitted. See in *Service Information S280-90-1, Vacuum Interrupter Withstand Test Voltage* ***Ratings Information*** for further information. G109.2

With the recloser open and the yellow trip-reset handle down, perform a hi-pot test for one minute across each open vacuum interrupter assembly at the following voltages:

Type VWE: 37.5 kV rms or 53 kV dc

Type VWVE27: 45kV rms or 63.5 kV dc

Type VWVE38X: 52.5 kV rms or 74.2 kV dc

The interrupter should withstand the test voltage and should not load down the source.

CAUTION: Equipment damage. Recloser must be open (yellow operating handle, under sleet hood, **down**) before untanking. Tripping the mechanism out of oil **will** cause excessive mechanical shock to the operating mechanism, which will cause accelerated wear **and/or** damage to the mechanism. T202.0

Untanking The Recloser

When untanking the recloser for inspection or repair, use care to keep from catching the corona shields on the inside lip of the tank. This is particularly likely on units that are heavily unbalanced, such as those equipped with accessory BCT's on one side.

ACCESSORIES

Recloser accessories that require customer connections and/or customer furnished auxiliary power are described on the following pages.

Power requirements, connection instructions, and adjustments, where needed, are also included. A connection diagram for the recloser is shown in Figure 8.

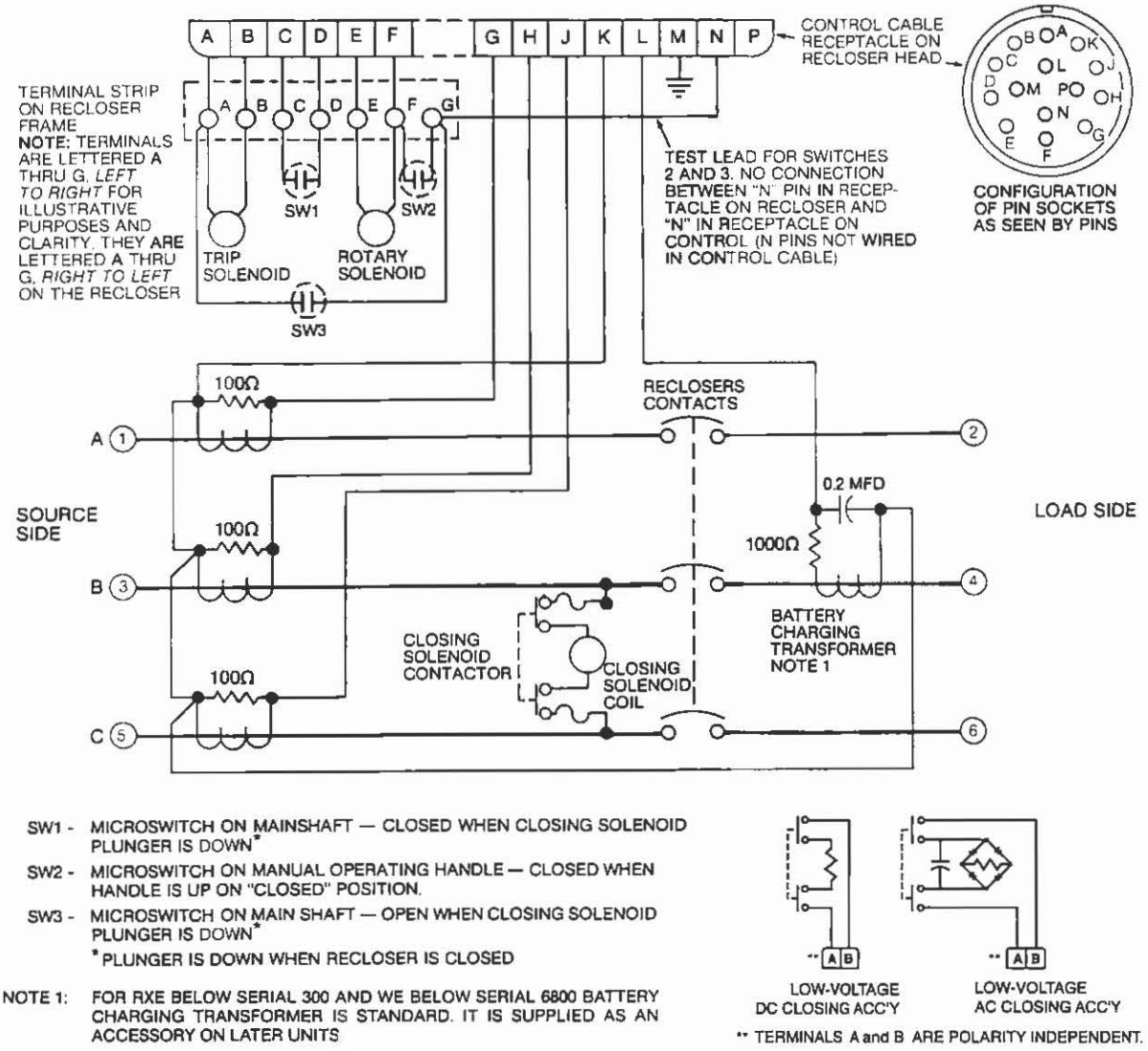

SW1 - MICROSWITCH ON MAINSHAFT — CLOSED WHEN CLOSING SOLENOID PLUNGER IS DOWN*

SW2 - MICROSWITCH ON MANUAL OPERATING HANDLE — CLOSED WHEN HANDLE IS UP ON "CLOSED" POSITION.

SW3 - MICROSWITCH ON MAIN SHAFT — OPEN WHEN CLOSING SOLENOID PLUNGER IS DOWN*

*PLUNGER IS DOWN WHEN RECLOSER IS CLOSED

NOTE 1: FOR RXE BELOW SERIAL 300 AND WE BELOW SERIAL 6800 BATTERY CHARGING TRANSFORMER IS STANDARD. IT IS SUPPLIED AS AN ACCESSORY ON LATER UNITS

Figure 8.
Connection diagram for the recloser.

WARNING: Hazardous voltage. The equipment is shipped with the shorting thumbscrews in the CT terminal blocks. These thumbscrews must not be removed until external connections are made to the terminal blocks. Energizing the equipment with the shorting screws removed, and no load connected, will cause high voltage to be generated in the CT secondaries. Contact with high voltage can cause severe personal injury or death and equipment damage. T208.2

Bushing-Type Multi-Ratio Current Transformers

Either 600:5 or 1200:5 multi-ratio current transformers for operating relays or current meters can be installed on the load-side bushings (Figure 9) and/or the source-side bushings. These transformers have only one primary turn, which is the bushing rod. Taps on the secondary winding provide the different ratios. The available ratios and their corresponding terminal connections are shown in Table 5. The terminal arrangement for tapped secondary (Figure 10) is accessible when the cover plate on the transformer housing is removed.

TABLE 5
Multi-Ratio Current Transformer Ratios and Terminal Connections

600:5 Multi-ratio BCT's		1200:5 Multi-ratio BCT's	
Ratio	Terminals	Ratio	Terminals
600:5	X1-X5	1200:5	X1-X5
500:5	X2-X5	1000:5	X2-X5
450:5	X3-X5	900:5	X3-X5
400:5	X1-X4	800:5	X1-X4
300:5	X2-X4	600:5	X2-X4
250:5	X3-X4	500:5	X3-X4
200:5	X4-X5	400:5	X4-X5
150:5	X1-X3	300:5	X1-X3
100:5	X1-X2	200:5	X1-X2
50:5	X2-X3	100:5	X2-X3

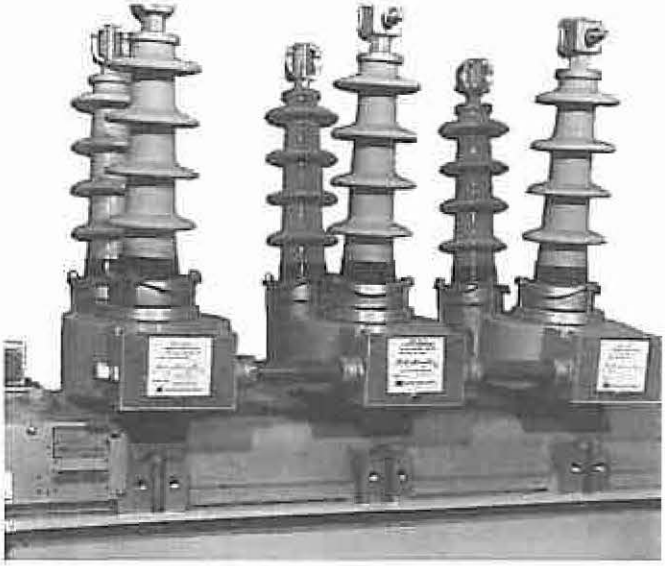

82278KMA

Figure 9.
Multi-ratio current transformers mounted on load-side bushings.

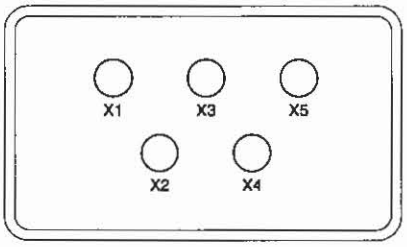

Figure 10.
Multi-ratio BCT secondary winding terminals.

CAUTION: Equipment damage. Do not use metallic (electrically conductive) conduit when connecting the current transformers that are enclosed in metal housings. Metallic conduit will form a shorted turn, linking the CT core, which will increase exciting current and adversely affect accuracy and it can also damage the transformer winding. T227.1

Auxiliary Switch

Remote indication of recloser contact position can be accomplished with an auxiliary switch.

The three-stage switch (with switch cover removed) is shown in Figure 11. Each stage or section has two independent sets of contacts: *a* and/or *b*. When the recloser's main contacts are open, the *a* contacts are also open and the *b* contacts are closed. Table 6 shows the related recloser-switch contact positions.

TABLE 6
Related Recloser/Switch Contact Position

Recloser Contacts	Closed	Open
Auxiliary *a* contacts are:	Closed	Open
Auxiliary *b* contacts are:	Open	Closed

Switch contacts are insulated for 600 volts and have a continuous-current rating of 10 amps. The interrupting rating of the auxiliary switch contacts is shown in Table 7.

A 1⅛-inch diameter wiring entrance hole is provided in the baseplate to accommodate standard 1-inch conduit cable bushing. Contacts can be changed for either a or b operation by repositioning the cams inside each switch section.

TABLE 7
Auxiliary Switch Interrupting Ratings

Volts	ac Inductive	ac Non-Inductive	dc Inductive	dc Non-Inductive
24	-	-	15.0	20.0
48	-	-	7.5	10.0
120	50	80	-	-
125	-	-	1.5	2.0
240	25	40	-	-
250	-	-	0.45	0.5

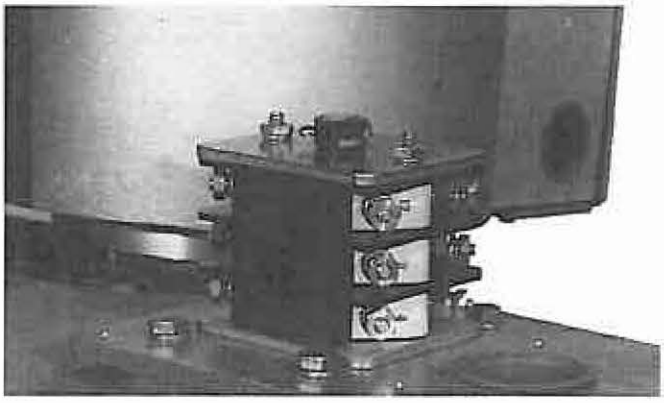

82279KMA

Figure 11.
Auxiliary switch.

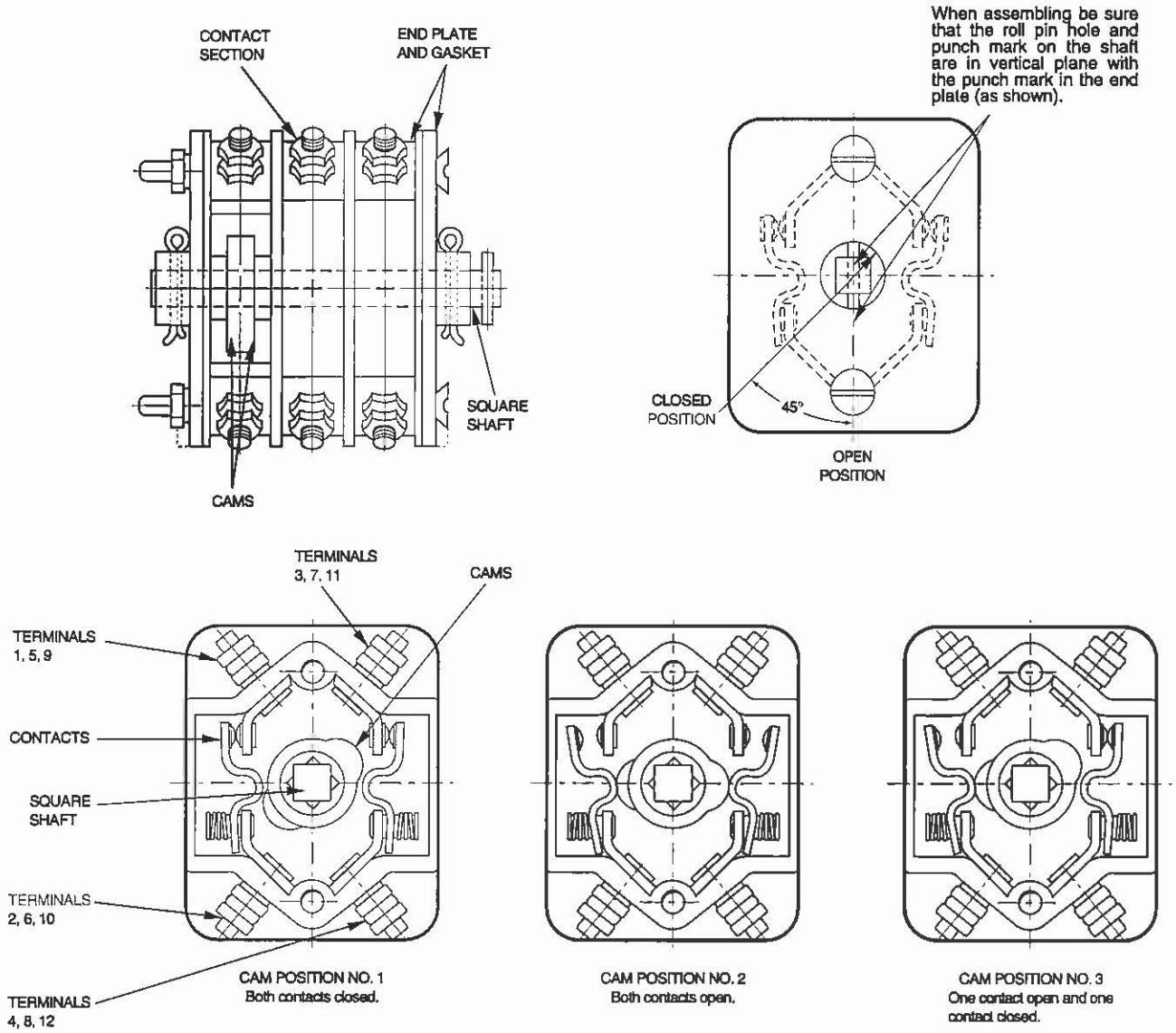

Figure 12.
Auxiliary switch cam positions.

To Change Any Auxiliary Switch Cam Position

1. Remove the auxiliary switch housing cover.
2. Remove the four screws and lockwashers securing the housing baseplate to the recloser head.
3. Lift off the entire switch assembly.
4. Remove the cotter pin and collar from the square shaft.
5. Remove the hexnuts and lockwashers from the two long machine screws holding the switch sections to the baseplate.
6. Starting with the bottom section, lift the cams off the square shaft.
7. Replace the cams in one of the positions shown in Figure 12.
8. Reposition and fasten the switch sections to the housing baseplate.
9. Replace the collar and cotter pin on the shaft.
10. Remount the assembled switch on the recloser head, making sure that the pin in the square shaft engage the notch in the switch-operating shaft in the head casting.
11. Verify correct operation of each contact on the switch by using a continuity meter.

Low-Voltage Dc Closing

With the substitution of a special dc closing solenoid, mechanism modifications, and associated wiring, the recloser can be closed by an externally supplied low-voltage power source rather than from the primary high-voltage source. Low voltage is especially desirable in loop and load transfer schemes in which the recloser can be operated regardless of which side of the unit is energized. Current requirements for dc closing are 55 A at 125 Vdc and 30 A at 250 Vdc (momentary - five to six cycles in duration).

For reclosers equipped with low-voltage closing, a T-type double-receptacle assembly (Figure 13) is provided on the recloser head: one side is for connecting the electronic control; the other, for making low-voltage connections (polarity independent). No. 12 stranded conductors are recommended. The mating plug includes a weatherproof cable grip for 9/16-5/8-in. OD two-wire cable. Refer to Figure 15 for low-voltage DC closing connection requirements.

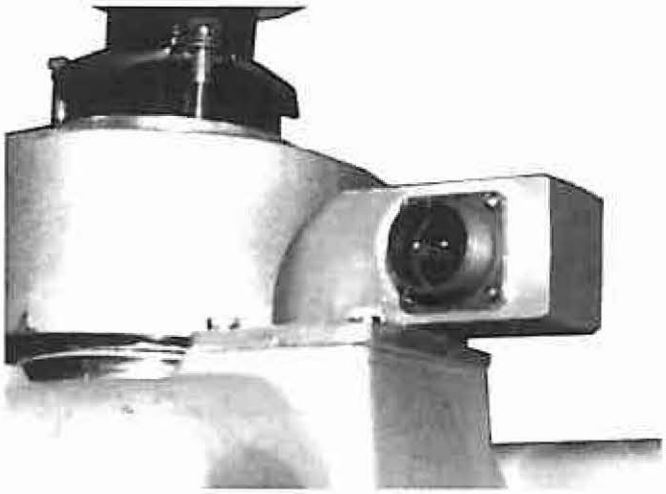

8Z279-1KMA

Figure 13.
Low-voltage connection fitting on top of recloser.

Low-Voltage Ac Closing

The dc closing solenoid can be operated from a low-voltage ac source with the addition of a modified closing contactor equipped with a full-wave diode bridge (Figure 15).

Current requirements are 50 A at 120 Vac and 34 A at 240 Vac (momentary - five to six cycles in duration). A 5 kVA transformer with a 3% impedance should be adequate. Smaller transformers may successfully operate the closing coil provided their impedance is low enough to supply the required current at the required voltage for the required duration. Figure 15 illustrates the low-voltage AC closing connection requirements.

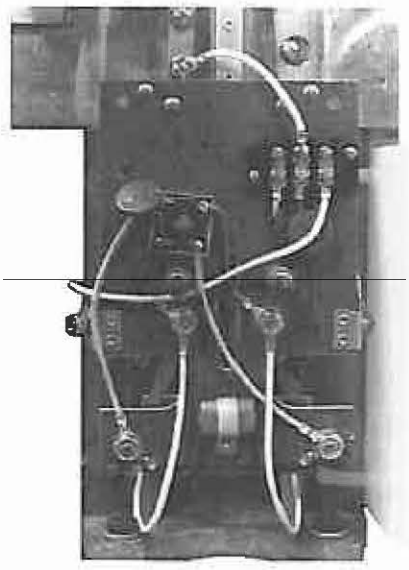

811085KMA

Figure 14.
Low-voltage ac closing contactor.

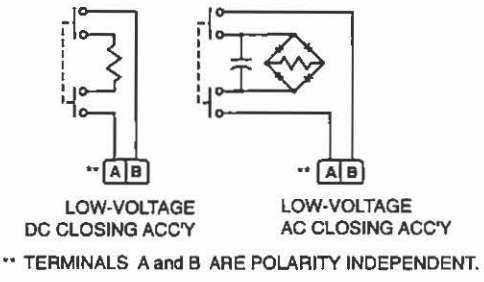

Figure 15.
Low-voltage closing connection diagrams.

CT Power Source for Battery Charger

On reclosers controlled by Form 3A control only: if a 120 Vac source is not available to power the battery charger in the electronic control, the recloser may be equipped with a BCT accessory to supply battery charger power from the primary line. The accessory consists of a single BCT mounted under the recloser head on the loadside B phase. The accessory is wired to pins K and L of the Form 3A electronic control receptacle as shown in Figure 8.

To maintain a full battery charge, the line current through the recloser must exceed 40 amps for at least 12 hours per day.

Manual Closing Tools

A T-handled closing tool, KA90R (Figure 16), is available for closing a de-energized recloser when high-voltage closing power is not available. If the recloser is mounted out of reach of the T-handled tool, the KA476R (Figure 17) manual closing tool can be used.

WARNING: Explosion Hazard. Excessive Contact Arcing. Do not use the manual closing tool to close an oil-insulated energized recloser. Closing an energized oil-insulated recloser with a manual closing tool can cause excessive contact arcing, rapid build-up of gas within the equipment, and possible explosion that can cause death, severe personal injury and equipment damage. T203.2

To close a de-energized recloser with the KA90R closing tool:

1. Remove the closing tool port cover and gasket from the side of the recloser head casting.
2. Insert the KA90R T-handled closing tool into the port, and engage the pin on the closing shaft (Figure 16).
3. To close the recloser, place the yellow operating handle (under the sleet hood) in the up (CLOSED) position and turn the tool one-quarter turn clockwise.

CAUTION: Equipment damage. Do not turn the manual closing tool more than one-quarter turn clockwise. Forcing the tool beyond the mechanism stop may shear the pin on the closing shaft of the recloser. T222.0

4. On reclosers controlled by Form 3A Controls only: operate manual control switch to CLOSE position, to synchronize control with recloser.
5. Replace the gasket and port cover before returning the recloser to service.

To close a de-energized recloser with the KA476R closing tool:

1. Place the yellow manual operating handle, located under the sleet hood, in the CLOSED (up) position.

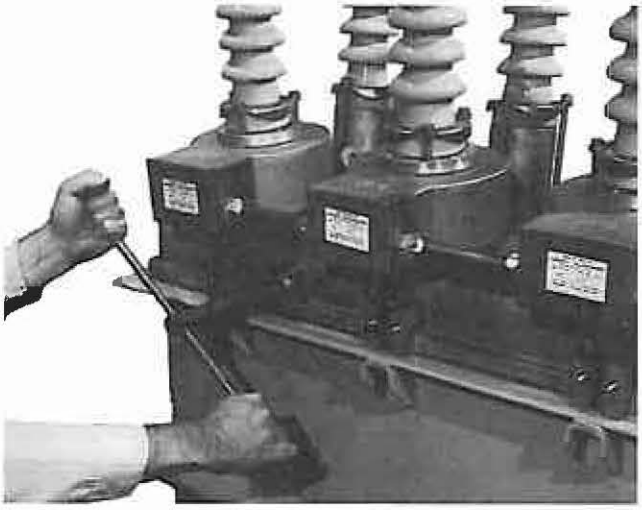

82284KMA-F

Figure 16.
Using a KA90R manual reclosing tool to operate the recloser.

2. Engage the closing tool handle (Figure 17) in the operating socket and move the handle clockwise approximately 90 degrees to close the recloser.
3. After the recloser has been closed, remove the KA476R closing tool handle from the operator socket.
4. On reclosers controlled by Form 3A Controls only: operate manual control switch to the CLOSE position, to synchronize control with recloser.

To trip the recloser:

Pull down on the yellow manual operating handle.

CAUTION: Equipment Damage. Do not attempt to trip a recloser by operating the manual closing tool from CLOSED to OPEN. This will result in damage to the recloser operating mechanism. T228.0

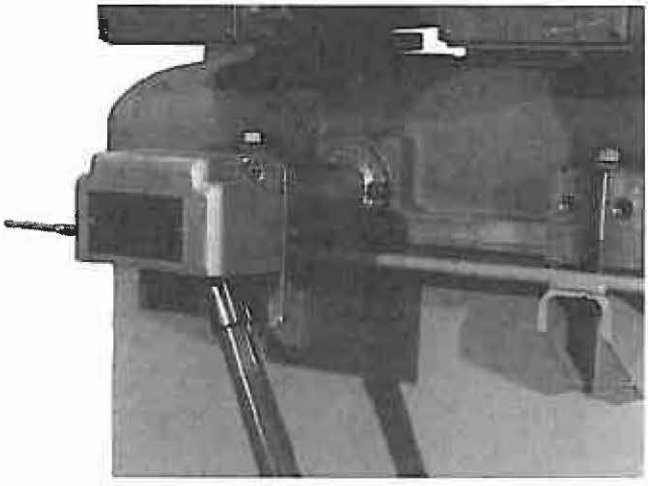

82285KMA

Figure 17.
KA476R manual closing tool.

MAINTENANCE INFORMATION

Maintenance Requirements

All Kyle reclosers and controls require routine inspection and maintenance to ensure proper operation. If the equipment is not adequately maintained, it may fail to operate properly.

CAUTION: This equipment requires routine inspection and maintenance to ensure proper operation. If it is not maintained, it can fail to operate properly. Improper operation can cause equipment damage and possible personal injury. G105.1

CAUTION: This equipment relies on oil to provide electrical insulation between components. The dielectric strength of the oil must be checked on a regular basis, as part of the routine maintenance inspection, to ensure that it is at or above minimum dielectric requirements. Use of this equipment with insulating oil that does not meet minimum requirements can result in internal flashovers that will damage the equipment and can cause personal injury. G107.2

Maintenance Manuals

Maintenance instructions for three-phase electronically controlled reclosers are listed in Table 8. *Reference Data R280-90-1* provides information on oil specifications and tests.

Frequency of Maintenance

To assure proper and trouble-free operation, reclosers must be maintained when they have operated the equivalent of a rated duty cycle (see Table 3, Page 5).

Note: ANSI C37.61, *"Guide for the Application, Operation and Maintenance of Automatic Circuit Reclosers"*, gives a procedure for converting the rated standard duty cycle into an equivalent duty cycle based on the actual operating duty of the recloser.

TABLE 8
Maintenance Manuals For Three-Phase Electronically Controlled Reclosers

Recloser Type	Service Information Bulletin Number
VWE, VWVE	S280-40-6
WE (S/N 6316 and above)	S280-40-7
WVE (S/N 1000 and above)	S280-40-8

Maximum Recloser Maintenance Intervals

In the absence of specific operation experience, use the following guideline to establish maintenance intervals:

- Oil interrupting reclosers should be maintained at least every three years.
- Vacuum interrupting reclosers should be maintained at least every six years.

For additional information and specific maintenance requirements, including periodic maintenance inspection procedures, refer to the appropriate maintenance manual, shown in Table 8.

Replacement Parts

Replacement parts for Kyle reclosers are available through the factory Service Department. Only factory authorized parts are to be used. To order replacement parts, refer to the applicable maintenance manual and the current Replacement Parts price list for catalog numbers and pricing. Contact your Cooper Power Systems sales representative for additional information and ordering procedures.

Factory-Authorized Service Centers

Factory-authorized service centers are located throughout the continental United States to provide maintenance, repair, and testing services for Kyle reclosers. For further information, contact your Cooper Power Systems sales representative.

Factory Maintenance Classes

The factory Service Department offers recloser maintenance training classes. These classes, taught by experienced service technicians, are held at the factory's in-house training facility. These courses provide hands-on instruction and factory-recommended procedures for the routine maintenance, troubleshooting, repair, and testing of Kyle reclosers and controls. It is strongly recommended that all personnel who service and maintain Kyle switchgear attend the appropriate classes. For additional information, contact your Cooper Power Systems sales representative.

Instructional Video Programs

Two video cassette maintenance training programs (*KSPV1 General Maintenance and Inspection Procedures for Kyle Reclosers* and *KSPV4 Mechanical Operation Service and Testing For Kyle Three-Phase Electronic Reclosers)* are available as supplemental training aids for maintenance and operations personnel. These video programs are to be used only as supplements to a comprehensive training program and in conjunction with existing service literature. For additional information, contact your Cooper Power Systems sales representative.

COOPER Power Systems

P.O. Box 1640
Waukesha, WI 53187
www.cooperpower.com

© Copyright 2003 Cooper Power Systems, Inc
Kyle® is a registered trademark of Cooper Industries, Inc.

Reclosers

Type RE, Three-Phase Maintenance Instructions

Service Information
S280-40-3
Page 1

14.4 kv • 400 Amperes

Replaces 281-25SB-1 dated 6/66
No change in text

CAUTION: DO NOT ENERGIZE THIS EQUIPMENT OUT OF OIL

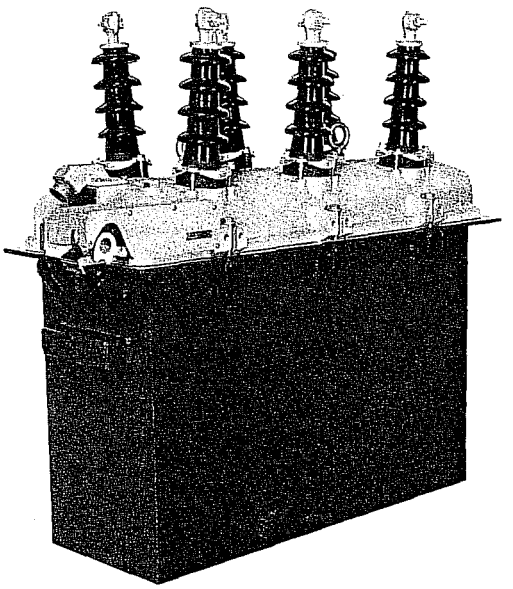

ORDER OF CONTENTS

	Page
Introduction	2
Description of Type RE Recloser	2
General Maintenance Information	2
Periodic Field Inspection and Maintenance	4
Shop Maintenance	6
Arc Interrupting Assembly (Serial No. below 601)	6
Arc Interrupting Assembly (between Serial Nos. 600 and 1001)	8
Arc Interrupting Assembly (above Serial No. 1000)	10
Closing Solenoid	12
Closing Solenoid Contactor	12
Closing Solenoid Fuses	13
Bushings	13
Removal of Head Casting	14
Mechanism Operation	15
Rating Changes	16
Adjustments	16
Operational Checks	16
Control Cable	16
Circuit Components	16
Bushing Current Transformers	18
Replacement Instructions for Circuit Components	20
Service Parts List	
Parts List for Interrupting Mechanism (below Serial No. 1001)	23
Parts List for Interrupting Mechanism (above Serial No. 1000)	26
Basic Recloser Parts	28
Parts List for Mechanism Frame Assembly	32

These instructions do not claim to cover all details or variations in the equipment, procedure, or process described, nor to provide directions for meeting every possible contingency during installation, operation, or maintenance. When additional information is desired to satisfy a problem not covered sufficiently for the user's purpose, please contact your McGraw-Edison Power Systems Division sales engineer.

McGRAW-EDISON COMPANY
Power Systems Division
Canonsburg, Pennsylvania 15317

January, 1970

INTRODUCTION

This manual for the Form 2 Type RE electronically controlled recloser, bulletin S280-40-3, covers:

- field inspection and maintenance
- shop maintenance procedures
- testing of electrical circuit components
- service parts listings

A separate manual, bulletin 281-27SB-2, covers the electronic control and provides information on general inspection, operational checks, and battery testing and charging. Procedures for testing the recloser and control together are given in the control installation manual, S280-65-1.

DESCRIPTION OF TYPE RE RECLOSER

The Type RE recloser, on cover, is a self-controlled device that protects three-phase distribution lines and equipment. This unit consists of a circuit-interrupting device, hereafter referred to as the recloser, an electronic control, and a connecting cable. Fault-current sensing is achieved by the control that actuates the recloser. Circuit interruption is provided by the recloser.

A Type RE recloser performs similarly to other reclosers in that it trips and automatically recloses. If a fault is temporary, reclosing of the Type RE restores normal service. If the fault is permanent, the recloser senses this by performing a preset number of operations and locking open. All three phases of a Type RE recloser open and lock out simultaneously.

Opening sequences of the recloser can be all fast, all delayed, or any combination of fast followed by delayed operations up to a total of four. Fast opertions clear temporary faults before branch line fuses can be damaged. Delayed openings allow time for fuses to clear so permanent faults can be confined to smaller sections of line.

Arcs are extinguished in the rugged arc-interrupter assemblies, figure 1, which utilize the proven cross-blast principle of arc interruption. Moving contacts are driven by powerful opening springs that are charged when the recloser is closed.

Closing is accomplished when a line-voltage solenoid is connected across two phases of the distribution line. This connection occurs when a rotary solenoid, located inside the recloser, allows the closing-solenoid contactor to close.

A trip-free control lever, linked with the interrupting mechanism, is provided to lock the recloser open manually. This lever, located under the sleet hood, cannot be used to close the recloser, but it must be in the CLOSED position before the electronic control can cause the recloser to close. A contact position indicator, linked to the recloser-interrupter mechanism but independent of the control lever, is provided under the sleet hood.

GENERAL MAINTENANCE INFORMATION

Maintenance Ensures Reliable Performance

Reclosers are widely applied to increase service continuity, reduce system operating costs, and increase revenue. The Type RE recloser performs all the functions by combining the flexibility and reliability of electronic control with proven interrupting mechanisms to achieve superior distribution-circuit protection. However, the Type RE can perform at peak efficiency only if it is maintained in good condition. While maintenance is relatively easy and inexpensive it is important.

Oil plays an essential role in arc interruption, insulation, and reclosing. Arc interruption, however, contributes to oil decomposition. For this reason, the oil steadily diminishes in dielectric strength as the recloser continues to clear fault currents. Breathing action also can result in moisture absorption by the oil, thus lowering its insulation value. For effective recloser operation, oil must be replaced before it deteriorates beyond a safe level.

Climate and Duty Determine Maintenance Intervals

Frequency of maintenance depends upon local climatic conditions and the interrupting duty imposed on the recloser. M-E recommends the unit be inspected completely, cleaned, and filled with new oil at least once each year. If the Type RE operates through a duty cycle in less than one year, periodic maintenance should be performed then.

The NEMA standard duty cycle for power class II reclosers is as follows:

Number of Operations	Percent of Interrupting Rating	Maximum Circuit X/R Value
32	15 to 20	3
20	45 to 55	6
12	90 to 100	12
Total 64		

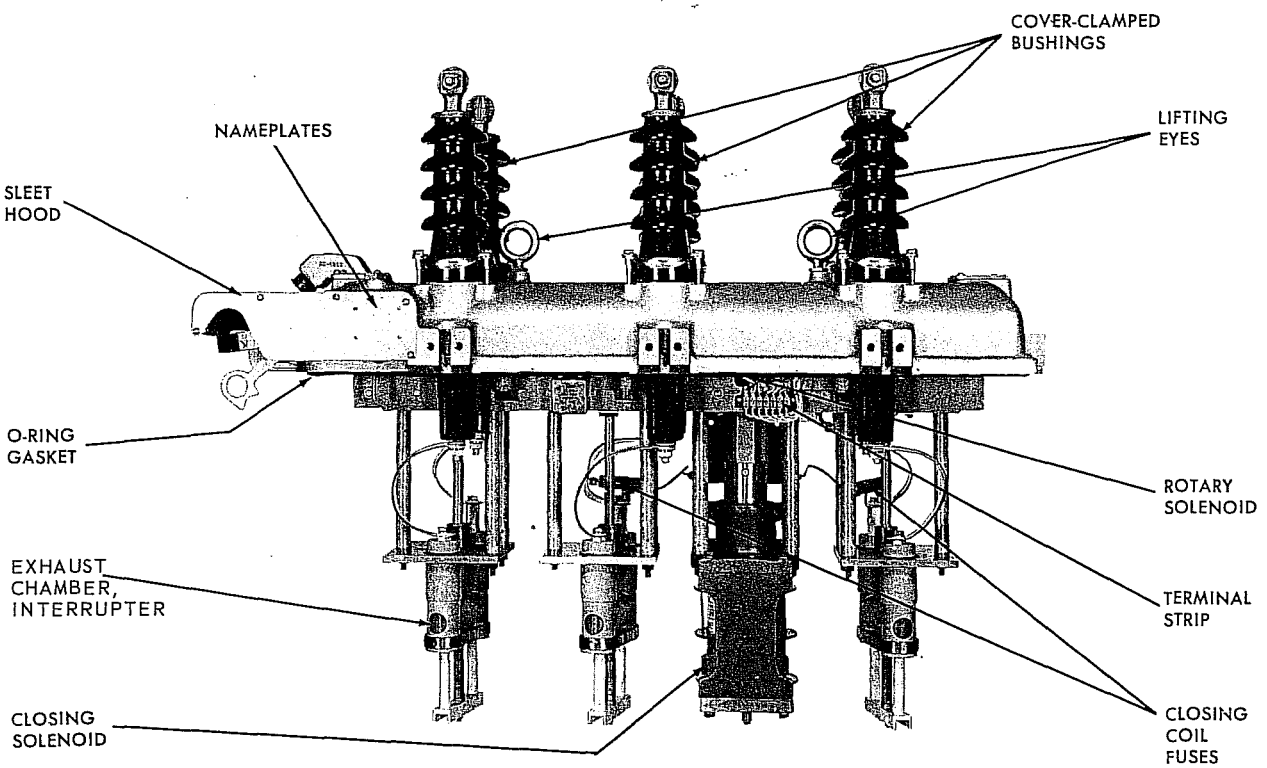

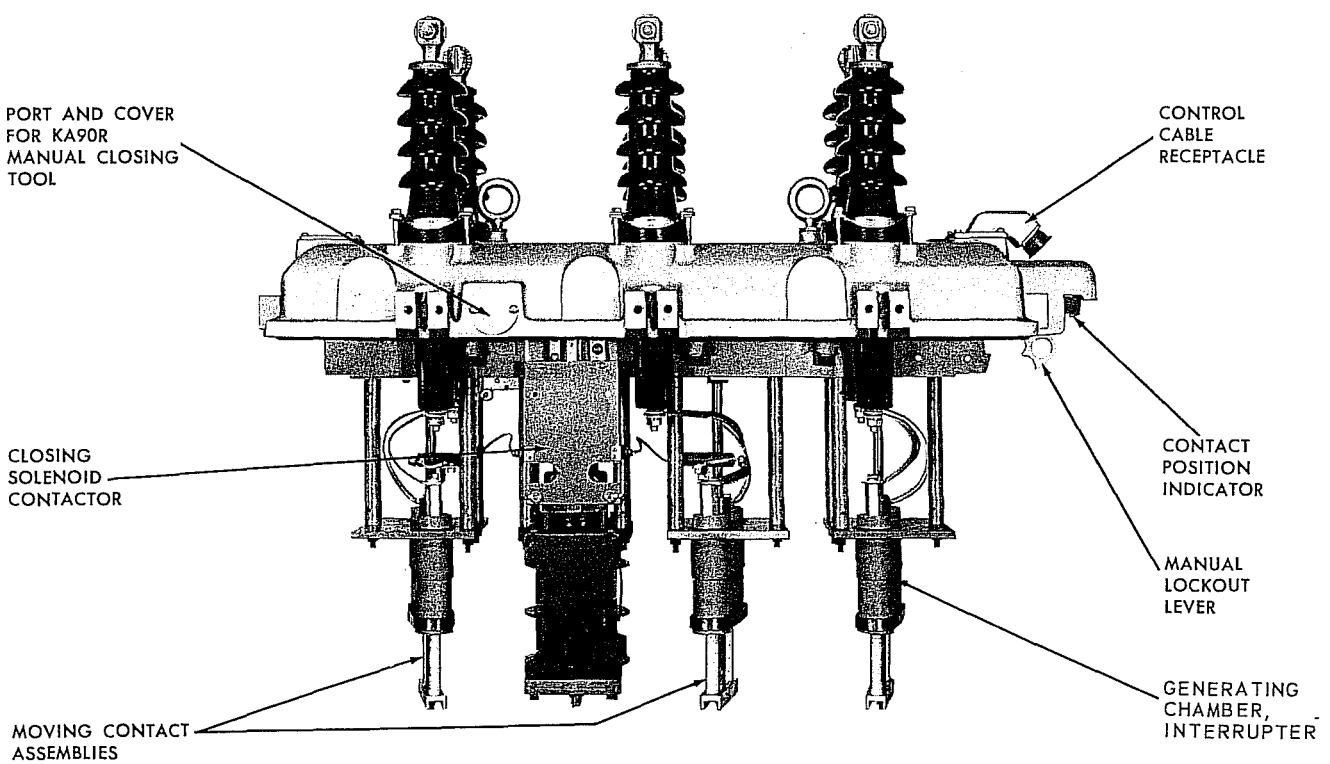

Figure 1
Untanked Type RE Recloser

GENERAL MAINTENANCE INFORMATION – CONT'D.

High Dielectric Strength Maintains Oil Effectiveness

Although the Type RE can undergo a complete duty cycle without requiring an oil change, more frequent oil changes will be required if the majority of fault currents are near the maximum interrupting rating. Oil that has become contaminated with carbon and sludge, or has a dielectric strength of 18 kv or lower, should be replaced. Use only oil that meets the requirements tabulated below for M-E switchgear. Refer to "ASTM Methods of Testing Electrical Insulating Oil," Publication D117. This publication is available from the American Society for Testing Materials, 1916 Race Street, Philadelphia, Pennsylvania.

CHARACTERISTICS OF OIL FOR M-E SWITCHGEAR

Color: nearly colorless	
ASTM colorimeter	1.0 max.
Union colorimeter	2.0 max.
Reaction	neutral
Neutralization number	0.03 mg KOH/g max.
Free sulphur	none
Corrosive sulphur	3 max.
Steam emulsion number	25 seconds max.
Flash point	145°C min. (293°F)
Fire point	160°C min. (320°F)
Pour point	(-45.6°C max.) (-50°F)
Viscosity:	
at 37.8°C (100°F) Saybolt Universal	62 sec. max.
at 0°C (32°F) Saybolt Universal	320 sec. max.
Specific gravity: at 20.0°C (68.0°F)	0.895/cc max.
Co-efficient of expansion:	
at 0°C (32°F)	0.000725
at 100°C (212°F)	0.000755
Interfacial tension	40 dynes/cm min.
Dielectric constant	2.2
Dielectric strength	26,000 volts min.
Weight per gallon	7.5 lbs.
Water content (Karl Fischer test)	40 parts/million max.

Servicing Location Varies with Amount of Maintenance

Routine inspection, minor maintenance, most adjustments, and replacement of oil can be performed on a recloser without removing it from the mounting frame. Repairs or major maintenance work should be performed in the shop.

PERIODIC FIELD INSPECTION AND MAINTENANCE

Each periodic check should include at least the following steps:

1. **BYPASS, TRIP, AND DE-ENERGIZE THE RECLOSER**
   Disconnect the control cable from the recloser.

2. **INSPECT EXTERNAL COMPONENTS**
   Check for broken bushings, paint scratches, or other mechanical damage.

3. **LOWER THE TANK TO EXPOSE INTERNAL COMPONENTS**
   Attach sheaves of the tank-hoisting mechanism to recloser tank, and take up slack. Then remove the ten bolts to release the tank from the head casting.

   CAUTION: Be sure the recloser is tripped before lowering the tank, so the recloser will not be tripped accidentally while the mechanism is out of oil.

4. **INSPECT MOVING CONTACTS**
   Arcing tips of the moving contacts can experience considerable erosion before replacement is necessary. The contacts should be replaced before their effectiveness is impaired by erosion of the load current contact surfaces.

   Figure 2 shows a set of moving contacts after one duty cycle, compared with a new set. The used contact and yoke assembly should be replaced as described on page 6 for units below serial no. 601, page 8 for units from serial no. 601 to 1000, and page 10 for units above serial no. 1000.

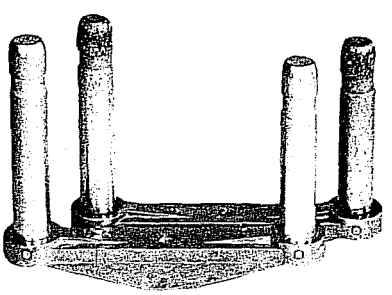

Figure 2
Moving contact assembly, after severe duty, is at right.

5. INSPECT EXHAUST CHAMBER ORIFICES

Each time a fault or load current is interrupted by the recloser, the twelve holes in each exhaust port, figure 3, will experience some erosion. If any of these holes becomes enlarged to $^{9}/_{64}$-inch diameter, the exhaust structure should be replaced. A convenient gage is a $^{9}/_{64}$-inch drill. Disassembly instructions begin on page 6 for units below serial no. 601, page 8 for units from serial no. 601 to 1000, and page 10 for units above serial no. 1000.

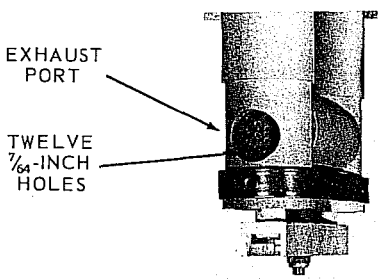

Figure 3
Exhaust port orifice.

6. INSPECT STATIONARY CONTACTS

If replacement of the exhaust chamber or moving contacts is indicated, also inspect the stationary contacts. This inspection can be omitted if the exhaust chamber and moving contacts appear to have further life. Stationary contacts are designed to last at least as long as moving contacts. Both contact shoes of each stationary contact assembly can be changed without replacing the fiber parts of the arc-interrupting structure. Best performance, however, will be achieved if the complete stationary contact and tube assembly is replaced when the moving contacts are replaced. Disassembly instructions for stationary contact assemblies begin on page 6 for units below serial no. 601, page 8 for units from serial no. 601 to 1000, and page 10 for units above serial no. 1000.

7. CLEAN ALL INTERNAL COMPONENTS

and remove all carbon traces by wiping with a clean, lint-free cloth. Pay particular attention to all insulating members. Flush the mechanism with clean, dry transformer oil.

CAUTION: Never use volatile solutions, detergents, or water-soluble cleaners.

Check solid insulating members such as plunger links, contact rods, spacer assemblies, and support rods for dielectric strength with M-E Type TE tester. If any parts constituting this solid insulation are found marginal, they should be replaced.

8. DRAIN OLD OIL

by removing the ½-inch plug at the bottom of the tank, or by opening the tank valve if one has been installed. Rinse the tank with clean oil and wipe out all carbon traces with a clean, lint-free cloth.

9. INSPECT TANK LINERS

and replace any liners that appear to have absorbed moisture. Any soft or spongy areas in the liners indicate that moisture has been absorbed. These areas are most likely to occur near the bottom of the tank. When replacing liners, be sure new liner installed in each section is the same size as the original.

For reclosers below serial number 1001, the replacement liners come in a kit, as part number KA829W. See parts list, page 29, item #74.

For reclosers above serial number 1000, the replacement liners come in a kit, as part number KA867R. See parts list, page 29, item #74.

10. CHECK CIRCUIT COMPONENTS ATTACHED TO RECLOSER COVER, FRAME, AND OPERATING MECHANISM

These components are identified in figures 23 and 24. Be sure all wiring to the terminal strip is secure at each terminal. The rotary solenoid should be firmly attached to the recloser frame.

Check mercury switches attached to the indicator shaft and main shaft. They should be securely held in place by the nylon mounting straps. Check the microswitch mounted above the main shaft. It should be firmly held in place by the mounting bracket. Check mounting of bushing-current transformers and battery-charging current transformer. See that wiring is in order.

11. FILL TANK WITH OIL

using only new transformer oil. The oil level should be 2¼ inches from the top of the tank with the mechanism removed. The level can be double checked with the oil level gauge after the mechanisms and head casting have been fastened in place.

12. REPLACE TANK

Clean the O-ring gasket and the tank-gasket seat. Move the control lever to the closed position to avoid any binding of the mechanism while raising the tank. Raise the tank and secure it to the head casting with the ten head bolts.

13. CHECK LOCKOUT LEVER AND CONTACT POSITION INDICATOR

Correct operation of these components can be observed by manually operating the recloser.

PERIODIC FIELD INSPECTION AND MAINTENANCE – CONT'D.

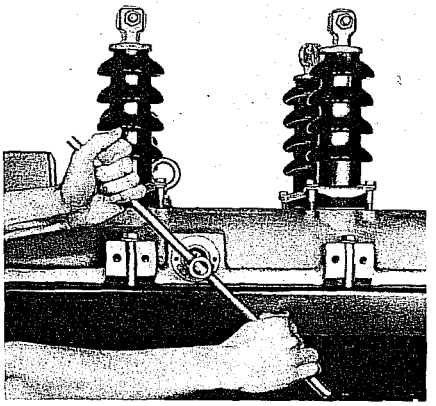

Figure 4
Manual closing with the KA90R tool.

14. MANUAL OPERATION

Remove the closing tool port cover and gasket and insert a KA90R closing tool. Manual operation can now be achieved by closing with the KA90R tool and tripping the recloser with the lockout lever. See figure 4.

CAUTION: Never use the KA90R closing tool on an energized recloser.

If a Type RE is to be operated out of oil, use the closing tool to retard opening of the contacts. While one person turns the tool clockwise against the stop, another person can move the trip lever, shown in figure 5, to the right. Now let the tool slowly rotate counterclockwise to retard opening of the contacts. Replace port cover and gasket when manual operation is completed.

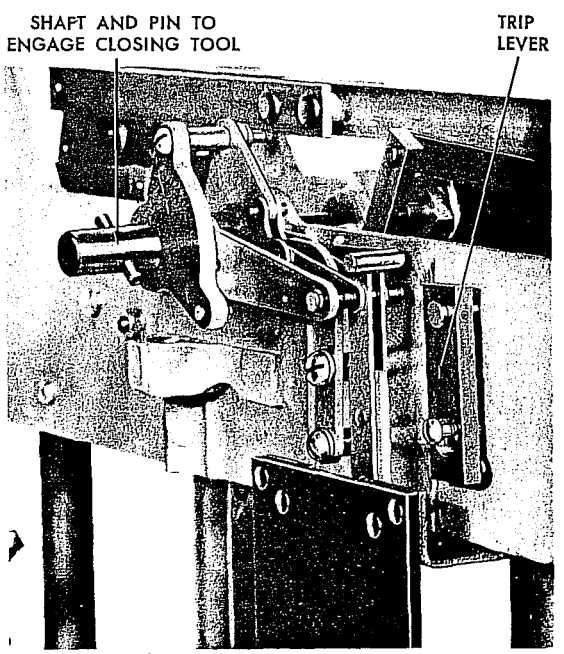

Figure 5
Move trip lever to right to release recloser when opening with closing tool.

15. CONNECT CONTROL CABLE TO RECEPTACLE ON RECLOSER HEAD CASTING

Place recloser in service according to procedures outlined in the Type RE Installation Manual, Bulletin No. S280-40-2.

Now, perform periodic check on electronic control as described on page 2 of the electronic control Service Manual, Bulletin No. 281-27SB-1.

NOTE: Electronic control can be checked out with or without recloser in service. Periodic operational checks can be made according to the control installation manual.

SHOP MAINTENANCE

When shop maintenance or repair is to be performed, remove the ten bolts that secure the head casting to the tank. With suitable hoist, raise the recloser mechanism out of the oil and allow it to drain. The recloser can be left suspended by the hoist, inverted and placed on a workbench, or the mechanism frame ends can be supported by a special rack.

Maintenance of the Type RE does not require the use of expensive special tools.

ARC-INTERRUPTING ASSEMBLY (UNITS BELOW SERIAL NO. 601)

After the Type RE recloser has performed a complete duty cycle, each arc-interrupting assembly should be dismantled completely, and any worn parts replaced.

1. Remove the vibration-proof nut, shown in figure 6, that secures the moving-contact yoke to the contact-lift rod.
2. Drive out the roll pin located near the end of the rod. Be sure to back the contact-lift rod with a heavy, solid object when driving out the roll pin.
3. Slide the yoke and moving-contact assembly from the lift rod. Save the spacer washers.
4. With a screwdriver, force the upper snap ring, identified in figure 6, out of its groove. The guide tube will then be free to slide from the cross-blast tube. Next, remove the terminal screw located on top of each contact tube.
5. Remove the cap screws, figure 6, that secure the tube clamping wedges to the interrupting-assembly mounting board. A cylindrical-shaped nut will drop out of the mounting board as each cap screw is removed.

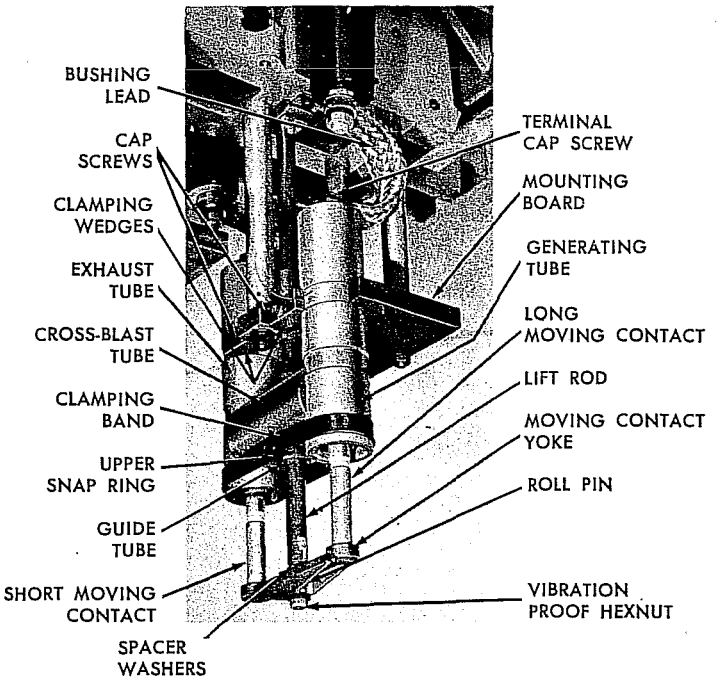

Figure 6
Arc-interrupting assembly.

6. Lower the interrupting assembly and dismantle by pulling the contact tubes apart at the top end. The clamping band around the bottom of the tubes will simply drop free. A fiber locking pin may drop out of each contact tube when the cross-blast tube is separated from them.

7. Figures 7a and 7b show cross-section views of stationary contact-tube assemblies. To dismantle an exhaust or generating tube, proceed as follows:

   a. With a long-nose pliers, or Waldes-Truarc pliers, remove the snap ring located at the bottom of the contact tube. When the snap ring is removed, a retaining washer will be released.

   b. Tap the contact tube to cause the fiber locking pin to drop out. Now pull out the bayonet guide tube and the fiber arcing tube.

   c. Insert a ½ inch blade screwdriver through the stationary contacts to engage the contact stud slot. With a box wrench, loosen and remove the terminal nut while the screwdriver is held securely by a vise. Remove contact shoes, contact stud, and retaining washers, leaving the retaining ring in place. Figure 8 shows completely disassembled generating and exhaust tubes.

   d. Replace any arc-eroded parts, and reassemble by reversing the procedure outlined in preceding paragraphs a, b, and c.

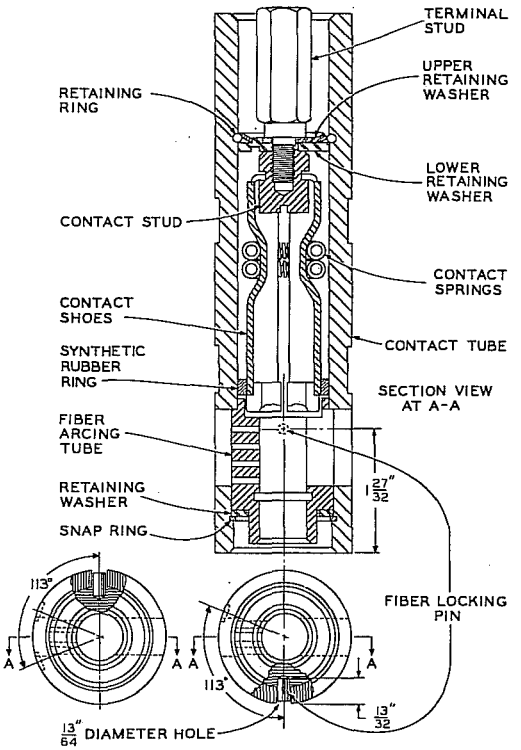

Figure 7a
Cross-section view of exhaust tube from a stationary contact assembly.

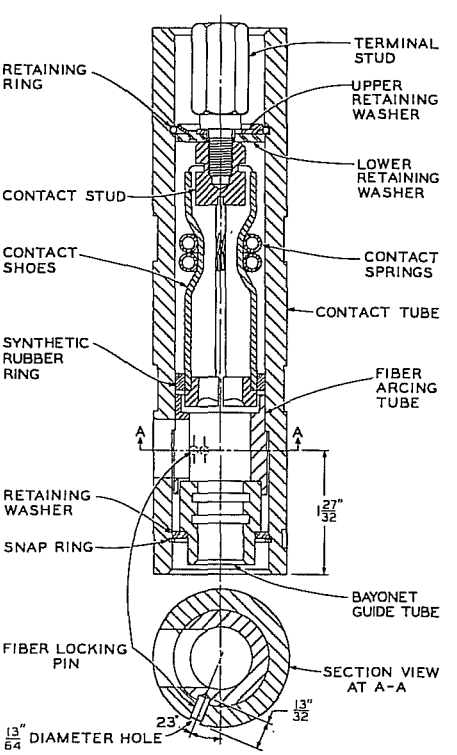

Figure 7b
Cross-section view of a generating tube from a stationary contact assembly.

SHOP MAINTENANCE – CONT'D.

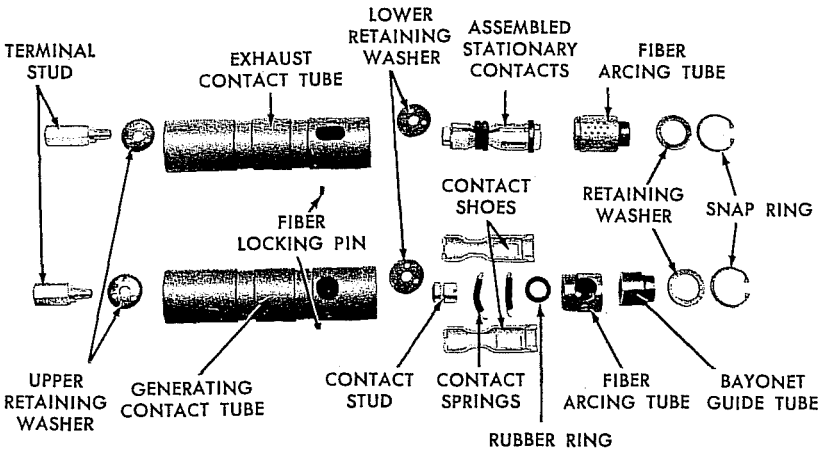

Figure 8
Components of exhaust and generating tubes.

8. To reassemble the interrupting assembly, place the cross-blast tube between the two contact tubes so that it seats in the lower tube slots. With tubes slightly apart at the top, slip the clamping band in place. Match the indents in the clamping band with the indents in the contact tubes.

9. Position the interrupting assembly in the mounting board and secure contact tubes with the two clamping wedges.

10. Make lead connections to terminal nut at top of each contact tube with cap screw. Replace lift-rod guide tube and secure it with the snap ring.

11. Replace the moving contact assembly making sure that the longer bayonet is inserted in the generating (unvented) tube. Use the same number of washers above the moving contact yoke as were originally installed.

12. Check for proper contact clearance as shown in figure 9. Dimension A should be $^{11}/_{64}$ inch plus or minus $^{1}/_{32}$ inch. Make the measurement while the recloser is held completely closed with the manual closing tool. If adjustment is necessary, add or subtract washers on the lift rod. Place surplus washers between elastic hexnut and contact yoke as shown in figure 6.

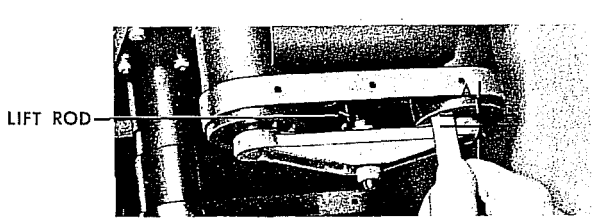

Figure 9
Checking moving contact yoke clearance.

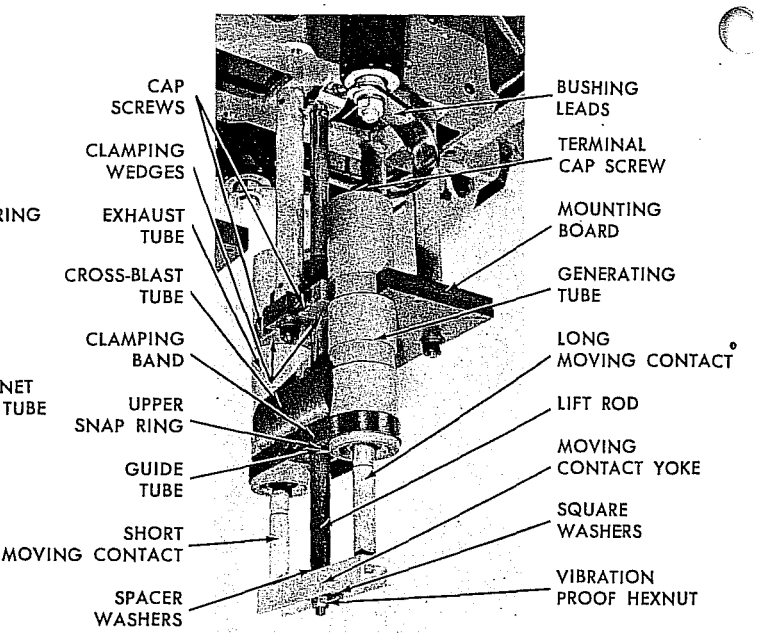

Figure 10
Arc-Interrupting Assembly

ARC-INTERRUPTING ASSEMBLY (UNITS FROM SERIAL NO. 601 TO 1000)

After the recloser has performed a complete duty cycle, each arc-interrupting assembly should be dismantled completely, and any worn parts replaced.

1. Remove the vibration-proof nut, shown in figure 10, that secures the moving-contact yoke to the contact-lift rod. Two square spacer washers will be released.

2. Drive out the roll pin located near the end of the contact-lift rod. Be sure to back the rod with a heavy, solid object when driving out the roll pin.

3. Slide the contact yoke from the lift rod. Save the spacer washers.

4. With a screw driver, force the upper snap ring, identified in figure 10, out of its groove. The guide tube will then be free to slide from the cross-blast tube. Next, remove the terminal screw from the contact-nut located at the top of each contact tube.

5. Remove the cap screws, figure 10, that secure the tube clamping wedges to the interrupting-assembly mounting board. A cylindrical shaped nut will drop out of the mounting board as each cap screw is removed. Lower the interrupting assembly.

6. Dismantle by first pulling the contact tubes apart at the top end. The clamping band around the bottom of the tubes will simply drop free. A fiber locking pin may drop out of each contact tube when the cross-blast tube is separated from them.

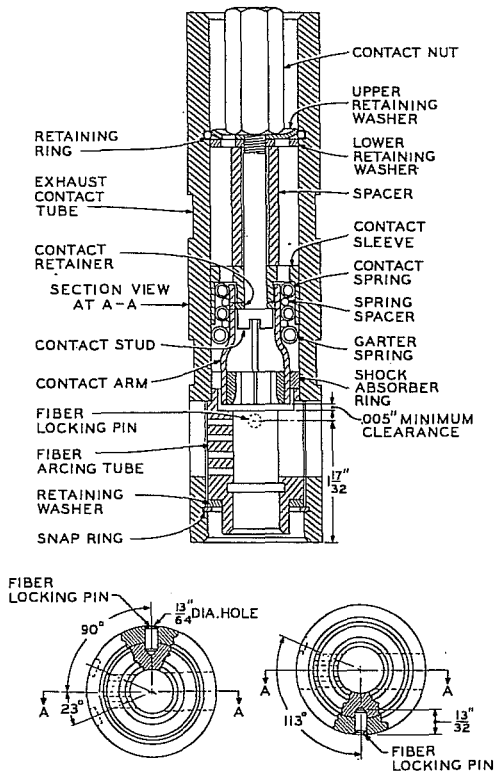

End view of C phase-tube (end opposite sleet hood)

End view of A and B phase tubes (A phase is on sleet hood end, B phase is center)

Figure 11a
Cross section view of exhaust tube from a stationary contact assembly.

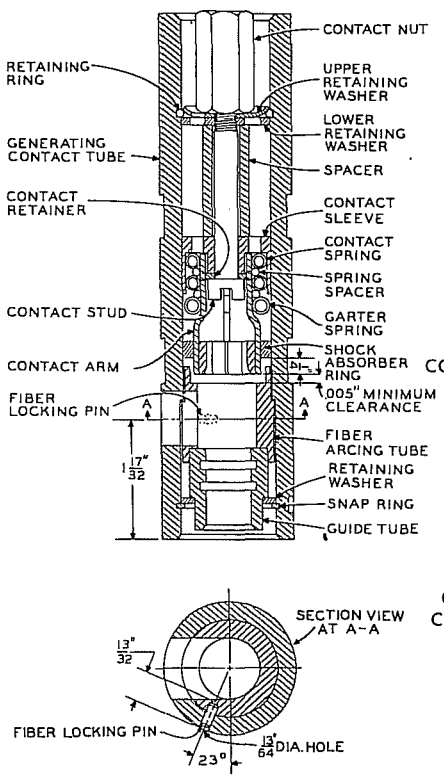

Figure 11b.
Cross-section view of a generating tube from a stationary contact assembly.

7. Figures 11a and 11b show cross-section views of stationary contact-tube assemblies. To dismantle an exhaust or generating tube proceed as follows.

   a. With a long-nose pliers, or Waldes-Truarc pliers, remove the snap ring located at the bottom of the contact tube. When the snap ring is removed, a retaining washer will be released.

   b. Tap the contact tube to cause the fiber locking pin to drop out. Now pull out the fiber arcing tube (exhaust tubes) or the guide tube and fiber arcing tube (generating tubes).

   c. Insert a ½ inch blade screwdriver through the stationary contacts to engage the contact stud slot. With a box wrench, loosen and remove the contact nut while the screwdriver is held securely in a vise. Remove contact arms, contact sleeve, spacer, stud, retaining washers, leaving the retaining ring (identified in figures 11a and 11b) in place. Figure 12 shows completely disassembled generating and exhaust tubes.

   d. Replace any arc-eroded parts and reassemble by reversing the procedure outlined in preceding paragraphs a, b, and c. Contact arms are assembled on the contact stud in this manner: Place the contact retainer on the shaft of the contact stud. Position the four contact arms around the stud and the retainer, at the same time placing the contact spacer ring inside the contact arms. Slip the garter spring over the threaded end of the stud and then around the contact arms. In the same manner slip on a spacer, a contact spring, the other spacer, and

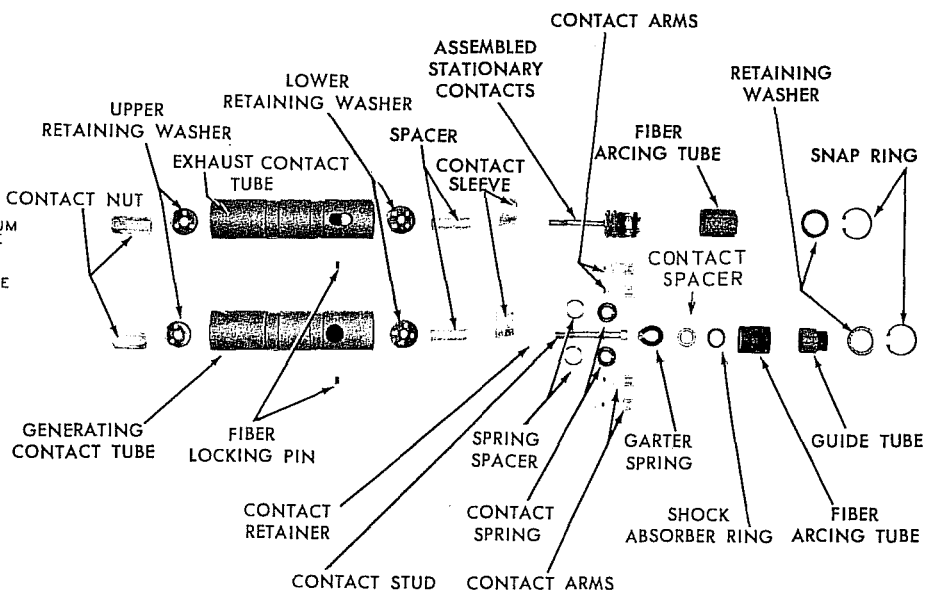

Figure 12
Components of exhaust and generating tubes.

SHOP MAINTENANCE – CONT'D.

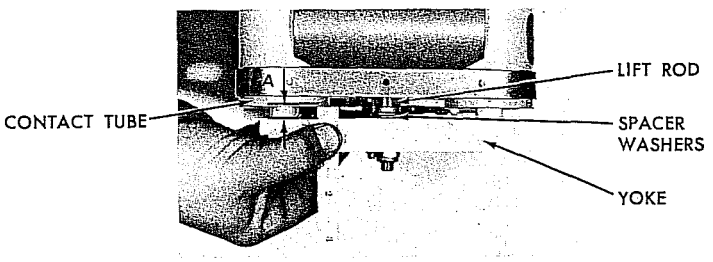

Figure 13
Checking moving contact yoke clearance.

the other contact spring, in that order. Then fit the shock absorber ring over the opposite end of the contact arms. Slip the spacer and contact sleeve over the contact stud before inserting the assembly into the contact tube. Refer to figures 11a and 11b for assembly of tube.

8. Follow steps 8 through 12 given on page 8 to complete reassembly. Refer to figure 13 for proper yoke clearance of $^{11}/_{64}$" as indicated by dimension A.

NOTE: When installing contact yoke (item 63 of parts list) used with units above serial no. 600 on units of lower serial numbers, use 3 square washers (item 64) between vibration-proof hexnut and yoke bottom.

ARC-INTERRUPTING ASSEMBLY (UNITS ABOVE SERIAL NO. 1000)

After the recloser has performed a complete duty cycle, each arc-interrupting assembly should be dismantled completely, and any worn parts replaced.

1. Remove the vibration-proof nut, shown in Figure 14, that secures the moving contact yoke to the contact-lift rod. Two square spacer washers will be released.
2. Drive out the roll pin located near the end of the contact-lift rod. Be sure to back the rod with a heavy, solid object when driving out the roll pin.
3. Slide the contact yoke from the lift rod. Save all the spacer washers.
4. Remove the terminal screw from the contact-nut located at the top of each contact tube.
5. With long-nose pliers or Waldes-Truarc pliers remove the snap rings on the upper side of the mounting board which hold the contact tubes in place. Lower the interrupting assembly.
6. Dismantle by first pulling the contact tubes apart at the top end. The clamping band around the bottom of the tubes will simply drop free. A fiber locking pin may drop out of each contact tube when the cross-blast tube is removed.

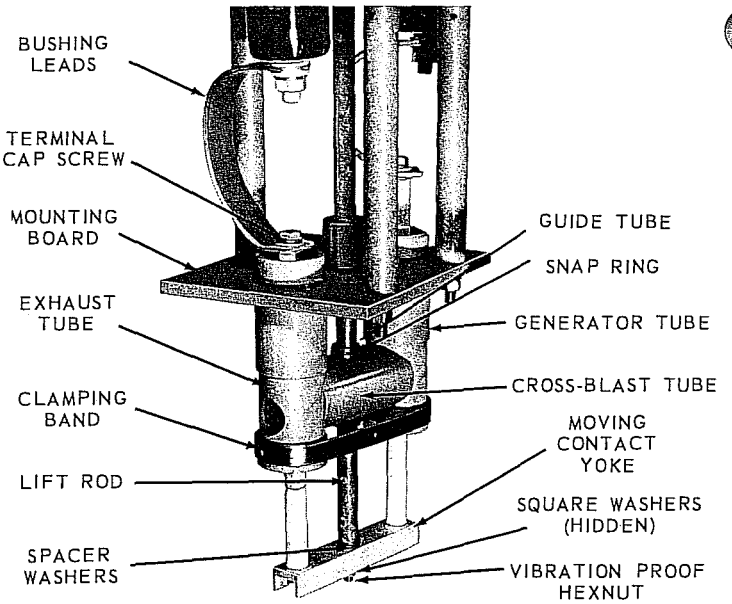

Figure 14
Arc-interrupting assembly.
Serial no. above 1000

7. Figures 15a and 15b show cross-section views of stationary contact-tube assemblies. To dismantle an exhaust or generating tube, proceed as follows:
   a. With long nose pliers, or Waldes-Truarc pliers, remove the snap ring located at the bottom of the contact tube. When the snap ring is removed, a retaining washer will be released.
   b. Tap the contact tube to cause the fiber locking pin to drop out. Now pull out the exhaust blast block (exhaust tube) or the blast baffle and tube plug (generating tube).
   c. Insert a ½-inch blade screwdriver with a blunt edge through the stationary contacts to engage the contact stud slot. With a box wrench, loosen and remove the contact nut while the screwdriver is held securely in a vise. Remove contact arms, contact support, and the retaining washer, leaving the retaining ring. (Identified in figures 15a and 15b) Figure 16 shows disassembled generating and exhaust tubes.
   d. Replace any arc-eroded parts, and reassemble by reversing the procedure outlined in preceding paragraphs a, b, and c. Contact arms are assembled on the contact stud in this manner: Place the four contact arms around the contact retainer, fillister screw, and internal spacer. Pass the springs and external spacers over the threaded end of the screw and over the contact arms in their correct order (See figures 15a and 15b). Slip the shock absorber ring over

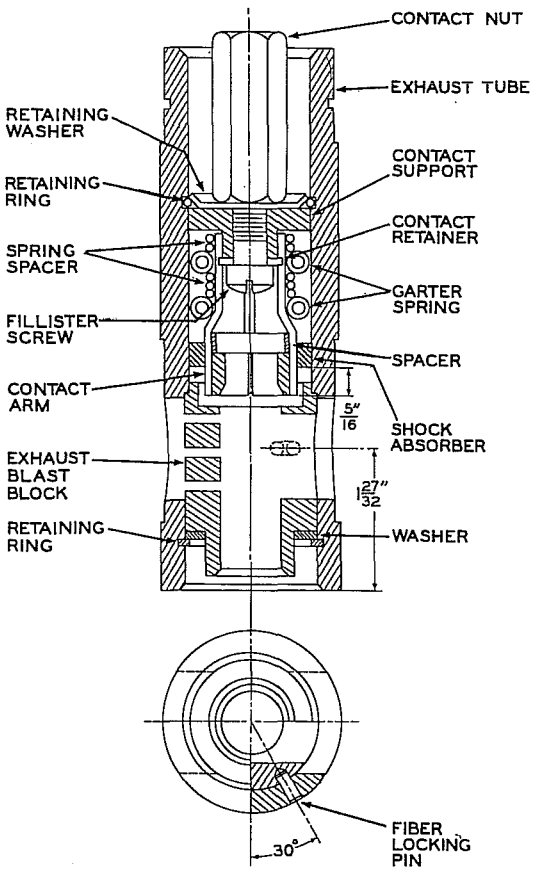

Figure 15a
Cross section view of exhaust tube.
Serial no. above 1000

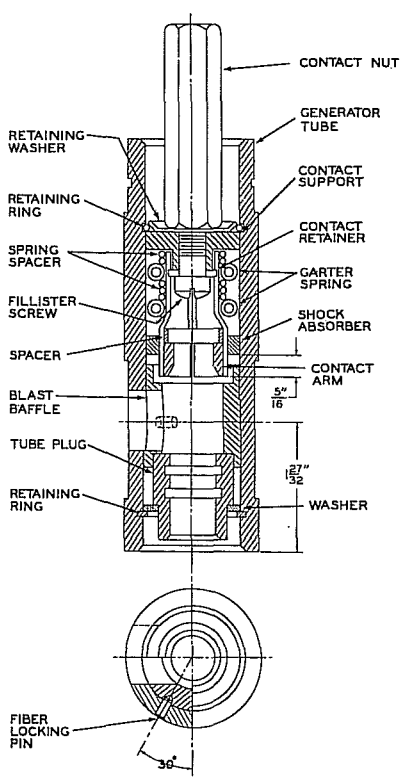

Figure 15b
Cross section view of generator tube.
Serial no. above 1000

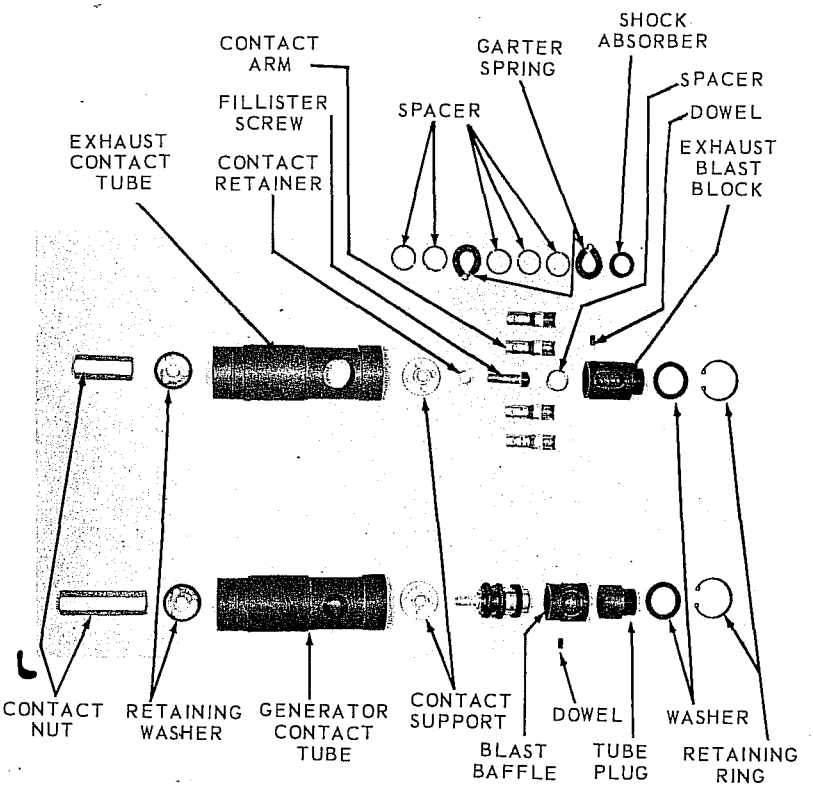

Figure 16
Components of exhaust and generating tubes.
Serial no. above 1000

the opposite end of the contact arms. Slip the contact support over the fillister screw before inserting the assembly into the bottom of the contact tube. Insert the retaining washer and contact nut from the opposite end and tighten the fillister screw.

8. To reassemble the interrupting assembly, place the cross-blast tube between the two contact tubes so that it seats in the lower tube slots. With tubes slightly apart at the top, slip the clamping band in place. Match the indents in the clamping band with the indents in the contact tubes.

9. Position the assembly and secure it with the two snap rings.

10. Make connections at the top of each tube.

11. Replace the moving contact assembly making sure that the longer bayonet is inserted in the exhaust (unvented) tube. Use the same number of washers above the moving contact yoke as were originally installed.

12. Check for proper contact clearance of $^{11}/_{64}$" (dimension A in figure 13).

SHOP MAINTENANCE – CONT'D.

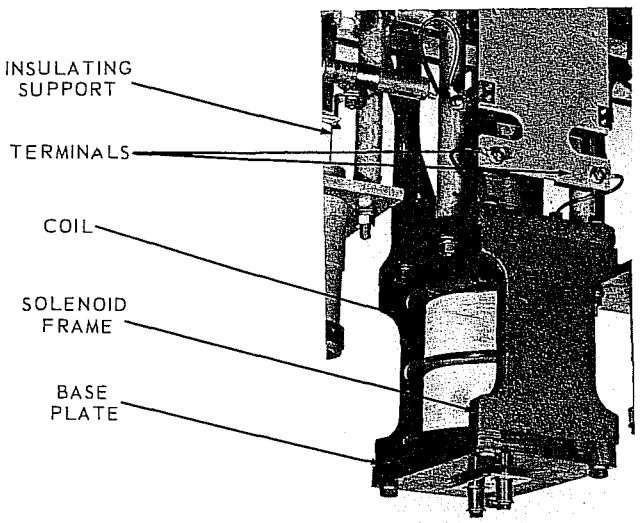

Figure 17
Closing solenoid.

CLOSING SOLENOID

Little maintenance is required for the closing solenoid. However, if the recloser is to be operated at another voltage, replace the solenoid coil as follows:

1. Disconnect the two coil leads from the closing-solenoid contactor, figure 17.
2. Remove four capscrews on the bottom of the solenoid frame and lower the coil and base plate. Lift the coil from the base plate.
3. Examine the insulating supports for evidence of tracking or moisture absorption. Replace any defective members as follows:

   Remove the hexnuts, lock washers, and flat washers that secure the solenoid frame to the supports. Then lower the solenoid frame slowly to avoid damaging the closing plunger. Loosen defective supports with pliers and remove. Install new members as required and reassemble.
4. Install the closing solenoid. Be sure to use a new gasket between the coil and solenoid base plate. Also see that solenoid leads clear insulating supports and solenoid frame by at least ½-inch.

CLOSING SOLENOID CONTACTOR

If the double-break contacts of the closing-solenoid contactor require replacement, install an entire new closing-solenoid contactor as follows:

1. Disconnect closing solenoid and fuse leads from contactor.

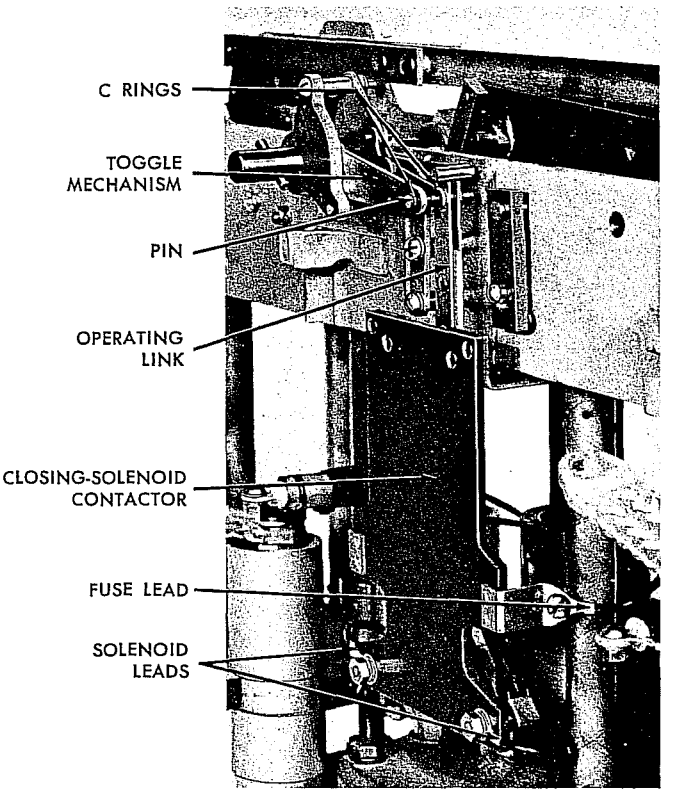

Figure 18
Releasing contact operating link of closing-solenoid contactor from toggle mechanism.

2. Remove three C rings to release pin that connects the operating link to the toggle mechanism, figure 18. Two C rings are between the operating link and toggle mechanism. The third is located on the outer end of the pin.
3. Using a long nose pliers, release the springs between the operating link and toggle from the pin. Then push pin through toggle mechanism and operating link.
4. Remove the three hexhead cap screws that secure the contactor to the underside of the recloser frame. Contactor is now free to be removed.
5. Replace the contactor by reversing the above procedure. Use new C rings on toggle-mechanism pin. Be sure closing solenoid and fuse leads clear insulating supports and grounded parts by at least ½-inch.

CAUTION: Fuse leads must be connected to upper terminals of contactor.

CLOSING SOLENOID FUSES

To replace a blown closing-solenoid fuse, simply disconnect the long lead at the closing-solenoid contactor, the short lead at the fuse end, and loosen the mounting strap. Slide out the fuse and install a new one.

A tag attached to each closing-solenoid coil shows the color-band coding and catalog number of the correct fuse to protect the coil. Table I also shows this information. Be sure fuse leads clear any grounded parts and insulating supports by ½ inch.

TABLE I

Closing Solenoid Phase-to-Phase Voltage, kv	Fuse Catalog Number*	Color Band	TCC Number (See Figure 19)
2.4 and 3.3	KA259R-4	Two Red	6
4.16 to 4.8 and 6.0	KA259R-1	Black	5
7.2 to 8.32 and 11.0	KA259R-2	Yellow	3
12.0 to 14.4	KA259R-3	Red	2

* Two fuses are required to protect the distribution system from closing coil failure.

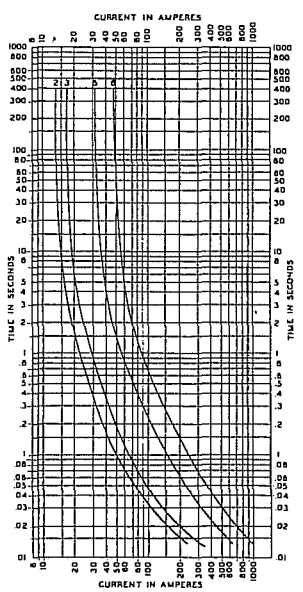

Figure 19
Fuse time-current characteristics for protection of closing solenoid.

BUSHINGS

Maintenance of bushings is generally limited to an occasional cleaning. However, if a bushing should become cracked or broken, replace it as follows:

1. Remove hexnut, lock washer, and flat washer on the lower end of the bushing to release the flexible straps.

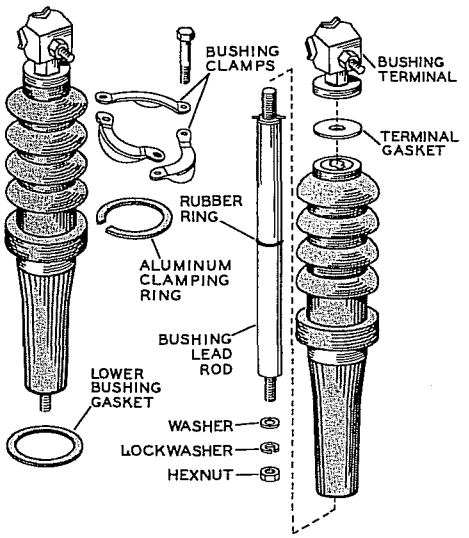

Figure 20
Components and associated parts of bushing assemblies.

2. Remove the three hexhead cap screws that secure the bushing clamps to the head casting. Lift the bushing assembly up through the head casting.
3. An aluminum clamping ring cushions the pressure between the bushing and bushing clamps. If it is in good condition, the ring can be reused. Twist the ring and slip it from the bushing.
4. Now the bushing assembly can be replaced completely or new porcelain only may be installed. If new porcelain is to be used, unscrew the bushing terminal and draw the bushing lead rod from the lower end of the porcelain. Insert the rod in the new porcelain and replace the bushing terminal. Be sure to use a new terminal gasket, figure 20.
5. Replace the bushing assembly, using a new gasket between the bushing and the head casting. When securing the bushing clamps, be sure to tighten the three bolts evenly a little at a time.

CAUTION: When reconnecting bushings, position flexible leads at least ½ inch from any vertical insulating support or contact plunger rod.

NOTE: Braided leads have been replaced by groups of copper straps on reclosers above serial no. 499. See items 26 and 27 on page 23.

SHOP MAINTENANCE – CONT'D.

REMOVAL OF HEAD CASTING

Access to components of the operating mechanism, mercury switches and microswitch, trip solenoid, rotary solenoid, and internal wiring is achieved by removing the head casting. Proceed as follows:

1. Disconnect all bushing leads at the lower end of the bushings.
2. Disengage the lockout lever and the contact position indicator by pushing the spring-loaded couplers inward. Refer to figure 21. Turn the couplers to lock them in the disengaged position.

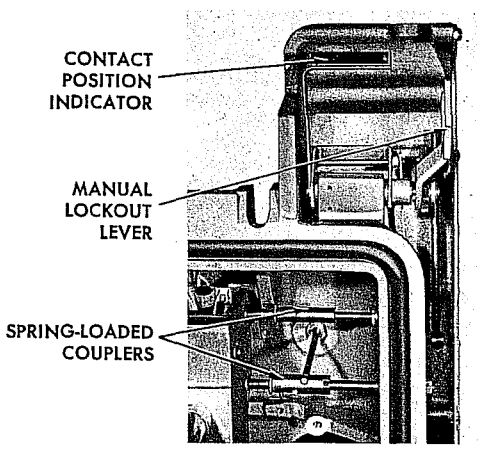

Figure 21
Spring-loaded couplers of lockout lever and contact position indicator in engaged positions.

3. If an auxiliary-switch accessory is mounted on the recloser head casting, remove the E ring and washer, figure 22, to allow disconnection of the operating lever.

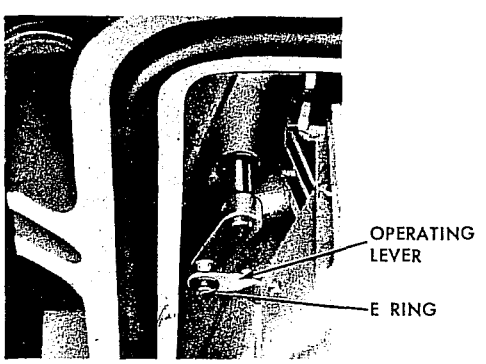

Figure 22
Auxiliary switch disconnection from operating lever before removal of head casting from operating mechanism.

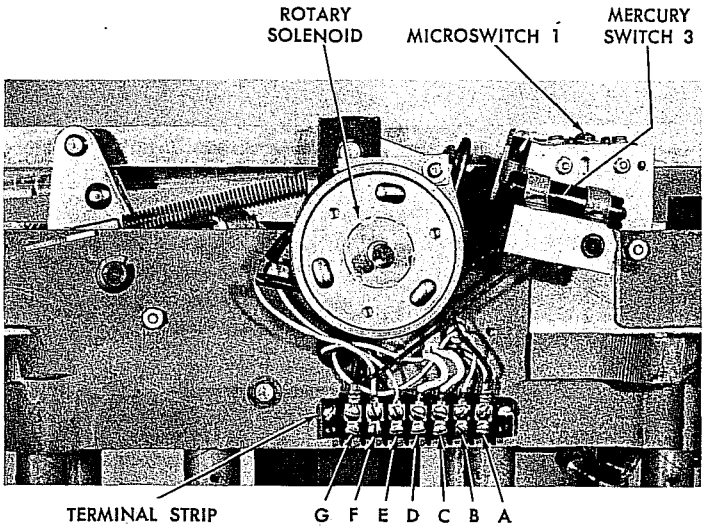

Figure 23
Circuit components attached to recloser frame and operating mechanism.

4. Remove the two screws that secure the 0.2-MFD capacitor to the load side of the recloser mechanism frame.
5. Disconnect the seven leads connected to the lower terminal strip of the terminal block attached to the recloser frame, figure 23. Be sure to label these seven leads corresponding to the terminals from which they are disconnected. Terminals are lettered A through G, right to left.

   Remove the screw that secures the nylon lead-strap to the frame above the terminal block.
6. Remove the six ½" x 4½" hexsocket-head bolts that secure the frame to the head casting. Be sure the recloser mechanism is supported from below before these bolts are removed. Six tubular spacers and lock washers will be released when the bolts are removed and the head is lifted from the recloser-mechanism frame. Figure 24 shows head casting and associated components removed from recloser mechanism frame.
7. To reassemble, carefully lower head casting in place with the six tubular spacers placed on the lugs. Start the six ½" bolts and tighten evenly to avoid any binding of the mechanism.
8. Engage the contact indicator and lockout lever. Reconnect the operating lever of the auxiliary switch if used.
9. Attach 0.2-MFD capacitor to the recloser frame. Reconnect bushing leads. Be sure bushing leads are positioned as described in the note under step 5, page 14.
10. Connect wiring from bushing CT's and cable receptacle to respective terminals on the terminal block. Attach nylon lead-strap to recloser frame.

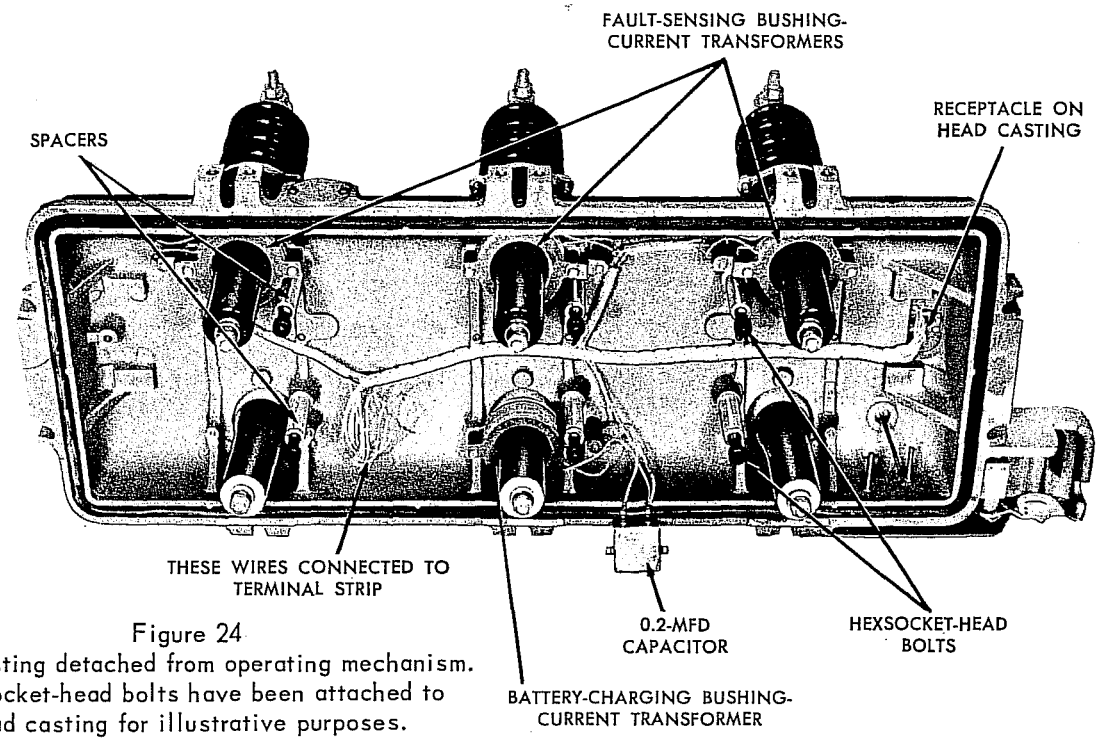

Figure 24
Head casting detached from operating mechanism. Hexsocket-head bolts have been attached to head casting for illustrative purposes.

MECHANISM OPERATION

The head mechanism performs the actual opening and closing operations in response to signals from the electronic control. Contact opening is initiated by a trip coil. Contact closing is performed by the closing coil, mounted below the mechanism. The basic lever arrangement in the mechanism is shown here.

With the contacts closed, figure 25, the opening springs are fully extended. The trip coil push rod rests up against the toggle latch and when the trip coil is energized, the toggle opens, figure 26. The contact-and-toggle-support assembly and the contact-and-trip-arm assembly rotate on their shafts and begin to push the contacts open. As the opening springs rotate the contact-and-trip-arm assembly past this point, figure 27, the trip arm moves the reset trip lever, which releases the reset lever. The reset lever is rotated by a spring and snaps the toggle closed. This motion of the reset lever also pulls the plunger out of the closing coil. At this point the contacts are completely open.

The closing coil is energized by a signal to the rotary solenoid on the side of the mechanism. The solenoid closes the closing solenoid contactor, which energizes the coil. The plunger is drawn into the coil and the reset lever is pulled back, figure 28, to its original position, at the same time closing the contacts. The mechanism is then ready for another cycle.

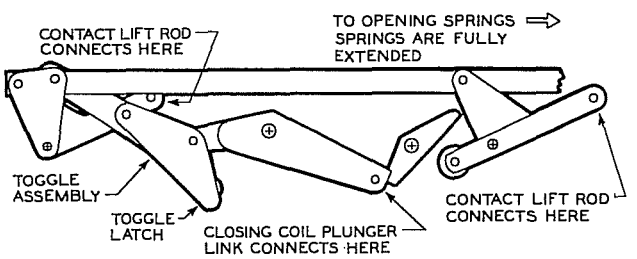

Figure 25
Contacts Closed

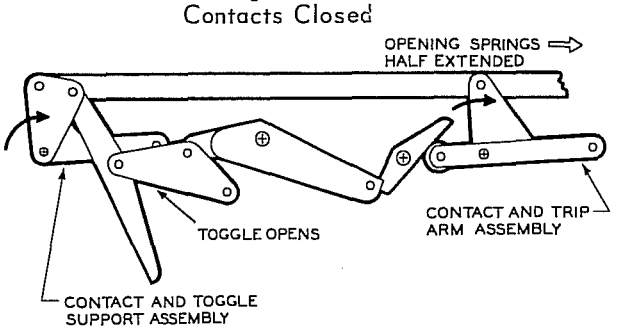

Figure 26
Contacts Open Halfway

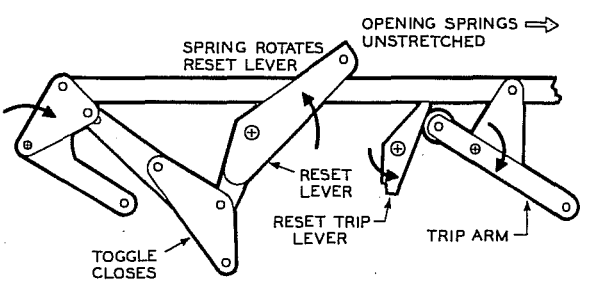

Figure 27
Contacts Fully Open

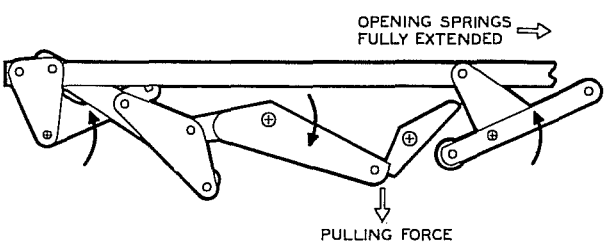

Figure 28
Contacts Reclosed

RATING CHANGES

Type RE reclosers' continuous current rating and minimum-trip values can be changed in the field as described in the control installation manual. Closing-solenoid coils are available for eight voltage ranges from 2.4 to 14.4 kv.

Two d-c coils rated at 125- and 250-volts dc also are available for use on the Type RE. When the closing-solenoid coil is changed, as described on page 12, the protective fuses may also require replacement. Two fuses are shipped with each replacement coil. Fuse and coil data are given on page 13.

ADJUSTMENTS

Refer to the control installation manual, bulletin 281-27SA-1, for information about operations to lockout, reclosing time, phase-trip sequence, minimum-trip values, resetting time, ground-trip sequence, phase-trip timing and ground-trip timing.

Control Lever Overtravel Adjustment

Check for proper adjustment of the control lever by first removing the sleet hood cover to expose the control lever. From the OPEN position, slowly push the control lever toward the CLOSED position. As lever is pushed up, latching of the recloser will be felt. At this point dimension "a" of figure 29 should be ¼ inch.

If the control lever is not adjusted properly, open the C-ring and remove it with diagonal cutters. Then slide the control lever from the shaft. Rotate the control lever clockwise to reduce dimension "a" or counter-clockwise to increase dimension "a". Reassemble by reversing the procedure when the correct clearance has been set.

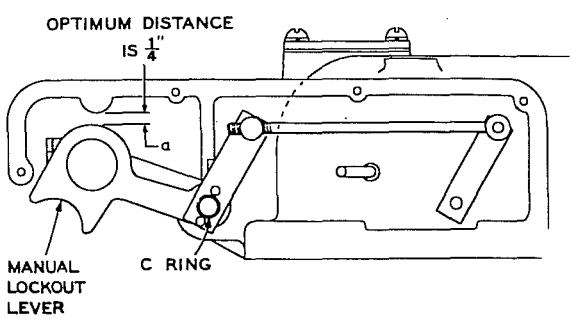

Figure 29
Overtravel adjustment of manual lockout lever.

OPERATIONAL CHECKS

Circuit components attached to the recloser cover, frame and operating mechanism require no maintenance and should provide trouble-free operation. However, if the Type RE recloser fails to operate properly, perform these steps:

1. check out the control cable for continuity between ends,
2. test the circuit components associated with the recloser mechanism as described below, and
3. check the electronic control as described in the electronic control's Service Manual, Bulletin No. 281-27SB-1.

The Type RE should be checked out in this order. An ohmmeter-voltmeter such as the Triplet Model M30, which was used as a reference for the following tests, is the only equipment necessary for steps 1 and 2.

CONTROL CABLE

Remove the recloser from service as described on page 4 if not already disconnected. Then detach the control cable from the receptacles on the recloser cover and underside of the electronic control housing. With the ohmmeter, check for continuity between cable pins and pin sockets. Pins and pin sockets are identified on each cable end. A zero reading indicates continuity; an infinite reading indicates an open circuit. If an open circuit is discovered, the cable can be reinstalled after the open-circuited lead is repaired or replaced. Continuity between unlike pins or sockets indicates a short circuit. Pins and sockets of the control cable designated N and P are not used.

CIRCUIT COMPONENTS

Refer to figures 23, 30, 31, 32, and 33 for identification of microswitch 1, mercury switches 2 and 3, rotary solenoid, trip solenoid, bushing current transformers, terminal strip, and configuration of pin sockets of the control cable receptacle on the head casting. The components are checked out under the three following conditions:

1. Recloser *contacts open* and manual *contact lever down*
   a. All measurements are made from the pin sockets of the control-cable receptacle.
   b. Connect ohmmeter probes to sockets A and B. The ohmmeter should read approximately 9.5 ohms. If not, difficulty may be present in the trip solenoid.

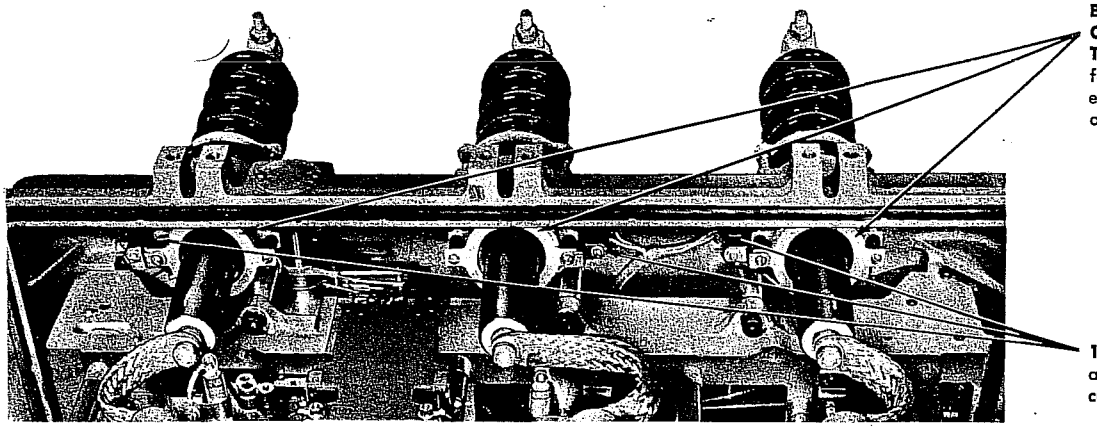

Figure 30

View of fault-sensing bushing-current transformers located on source side of recloser. Battery-charging current transformer is located on center-phase load side, except for these combinations:

1. 100 ampere phase-trip resistors, 2.4 kv or 4.16 kv to 4.8 kv closing solenoids
2. 140 ampere phase-trip resistors, 2.4 kv closing solenoid.

For these combinations the sensing transformers are located on the load side of the recloser while the battery-charging transformer is located on the center-phase source-side bushing.

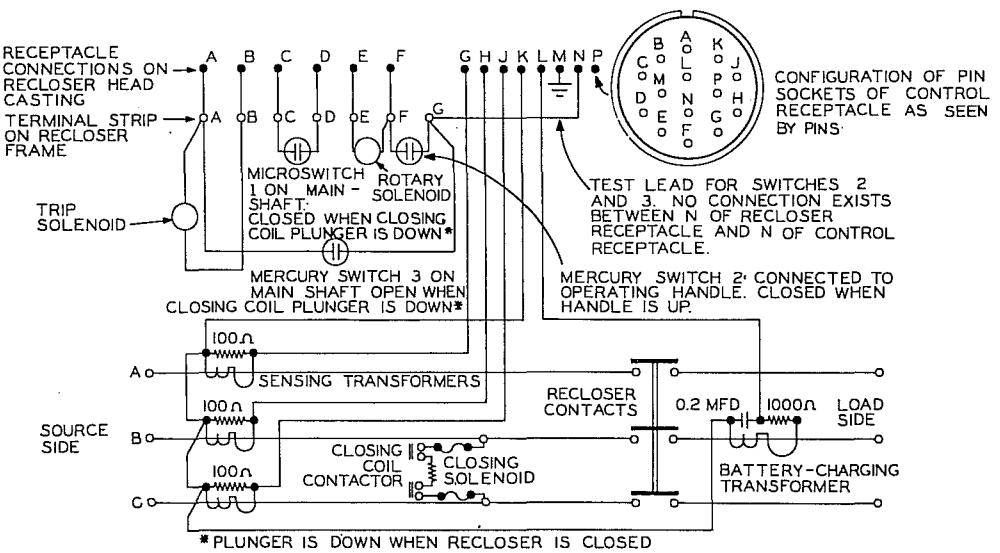

Figure 31

Internal wiring of Type RE recloser. Terminals on recloser terminal strip are lettered *right* to *left*, A through G. Terminals on terminal strip in this diagram are lettered *left* to *right*, A through G, for explanatory purposes. Pin N of the control-cable receptacle is connected to terminal G of the terminal strip on the recloser frame to facilitate testing of mercury switches 2 and 3.

NOTE: Readings within ±15 percent of suggested readings are sufficient to indicate components are trouble free.

c. Transfer ohmmeter probes to sockets E and F. Reading of 19 ohms indicates rotary solenoid should be trouble free.

d. Insert ohmmeter common probe into socket K. Insert the positive probe into sockets G, H, then J. All three readings should be 7 ohms. If not, corresponding sensing-current transformer may be faulty. Check bushings CT's for ratio and polarity as described on the test procedure on pages 18 and 19.

e. With ohmmeter common probe still inserted in socket K, insert positive probe into socket L. Ohmmeter should read 1000 ohms. If a reading of zero ohms is obtained, the 0.2-MFD capacitor may be short circuited. Readings deviating from 1000 ohms outside a 20 percent tolerance indicate damaged resistor or transformer winding.

f. Transfer ohmmeter probes to sockets C and D. Infinite ohms should be read indicating microswitch 1 is open circuited. If not, the microswitch is probably faulty, but should be rechecked before replacing.

NOTE: Mercury switch and microswitch positions for combinations of control-lever and recloser-contact positions are tabulated on page 18.

g. Transfer ohmmeter probes to sockets F and A. The ohmmeter should read infinite ohms. If not, mercury switch 2 may be faulty. Individual checks on mercury switches 2 and 3 can be made by means of pin-sockets N, F and A.

OPERATIONAL CHECKS – CONT'D.

2. Recloser *contacts open* and manual *contact lever up*

   a. Repeat step f under condition 1. Microswitch 1 should still be open.

   b. Transfer ohmmeter leads to sockets F and A. Ohmmeter should indicate zero-ohms showing that mercury switch 3 has remained closed and mercury switch 2 has closed.

   c. Remove ohmmeter probes from terminals F and A. Connect positive lead of the battery (or 25-volt station d-c source) to socket F. Momentarily connect the negative lead to socket E. Rotary solenoid should operate producing an easily distinguished sound. Repeat two or three times. Connect ohmmeter across source-side B and C phases; see figure 32 for identification of phases. The ohmmeter should show closing-coil continuity (Effective d-c resistance of coil when rotary solenoid is energized.) Disconnect d-c source.

      NOTE: To check for d-c closing-coil continuity, read value across d-c terminals in junction box.

      CAUTION: If a 25-volt d-c source is the control battery, the battery should be connected only as long as is necessary for testing purposes. Lengthy connection across the rotary solenoid will create an excessive drain of energy from the battery, although it has no effect on the solenoid itself. If a station d-c source is used, it can remain connected to sockets E and F from step 2c through completion of testing.

3. Recloser *contacts closed* and manual *control lever up*

   a. With 25-volt d-c source connected across sockets E and F, close the main recloser contacts with the KA90R closing tool, as described on pages 5 and 6. Ohmmeter connected across B and C phases should show loss of continuity indicating that closing-solenoid contactor is open.

   b. Transfer ohmmeter probes to terminals C and D. Zero ohms indicates that microswitch 1 is operative and closed. Remove KA90R closing tool and ohmmeter leads from receptacle sockets.

   c. Trip recloser by applying 25 volts d-c across socket A (positive) and socket B (negative). If recloser contacts do not trip open, trip solenoid may be inoperative.

      CAUTION: Recloser should be tripped in oil to avoid damage to the dashpot in the arc-interrupting mechanisms.

TABLE II

Recloser Contacts	Manual Control Lever	Micro-switch 1	Mercury Switch 2	Mercury Switch 3
OPEN	DOWN	OPEN	OPEN	CLOSED
OPEN	UP	OPEN	CLOSED	CLOSED
CLOSED	UP	CLOSED	CLOSED	OPEN

BUSHING-CURRENT TRANSFORMER TESTS

The sensing transformers and battery-charging transformer can be tested using the circuits shown in figure 32. An a-c ammeter possessing a 0 to 500 milliampere range is required.

Assemble the test circuit as shown in the top drawing of figure 32. Connect the phases in series and close the recloser contacts with the KA90R closing tool as described on pages 5 and 6. Connect a 100-ampere a-c test-current supply to points 1 and 2.

CAUTION: Never use the KA90R manual closing tool on an energized recloser.

Ratio Test for Sensing-Current Transformers

1. Energize 100-ampere test source.

2. Check current through control-cable receptacle sockets K-G, K-H, and K-J as identified in figure 31. For each sensing bushing CT checked, the milliammeter should indicate 100 milliamperes, ±10 percent. BE SURE TO ALLOW FOR TOLERANCES OF METERING EQUIPMENT. The resistance of certain types of meters is not negligible. It may be necessary to use the 0-500 milliampere scale, with its lower resistance, rather than the 0-100 milliampere scale.

3. A 100-ma reading verifies the 1000:1 ratio of the the current transformer. If 100-ma is not achieved, bushing CT can be suspected as faulty; but polarity test should be performed. De-energize test source.

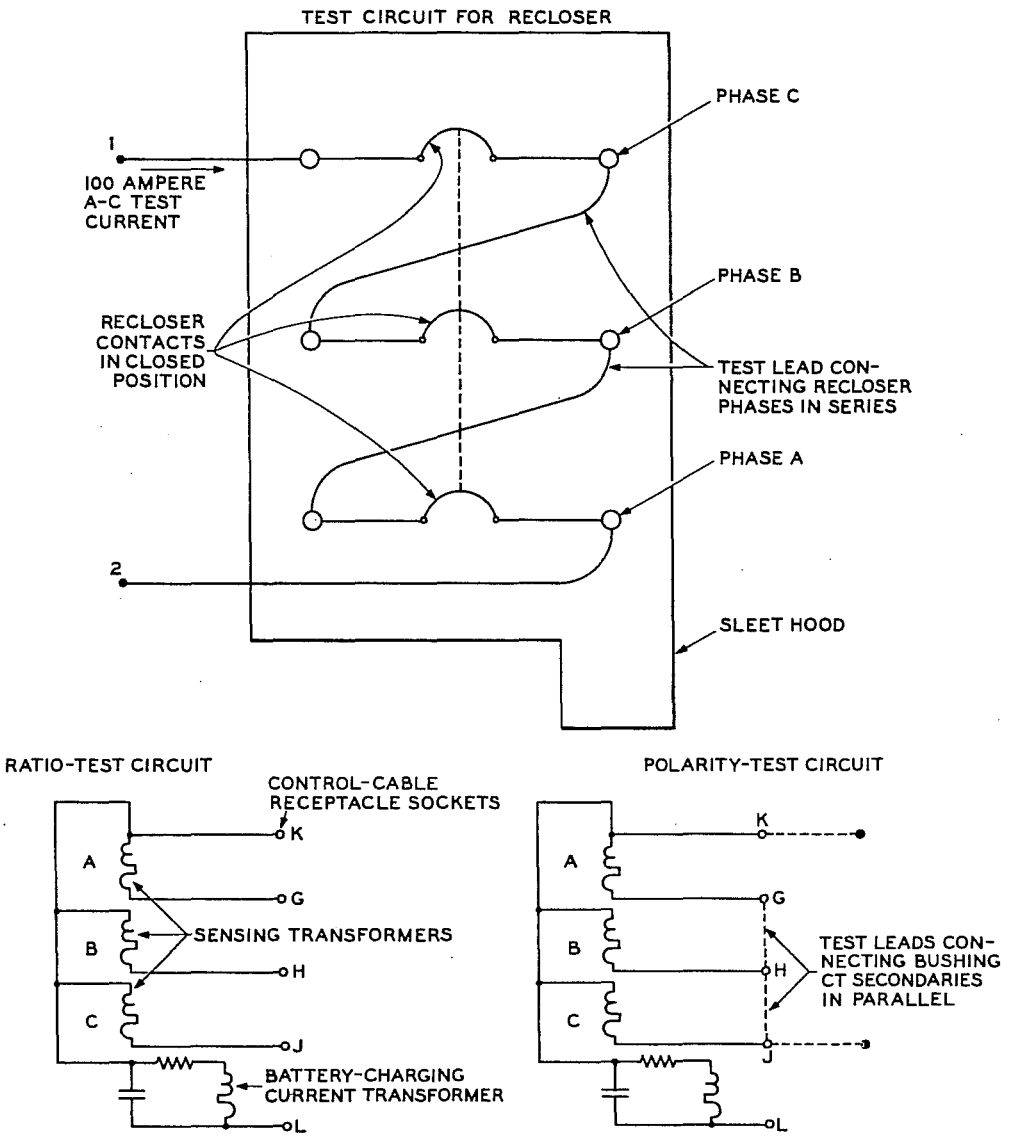

Figure 32

Test circuit for checking bushing-current transformers. Ratio and polarity test-circuits are the effective circuits that contribute to the testing. Components not having an effect on the current flow are not shown. Dotted lines in the polarity-test circuit are test leads.

Polarity Test for Sensing-Current Transformers

1. Connect sockets, G, H, and J of the control-cable receptacle in series with jumper leads as indicated in figure 32. The jumper leads connect the secondaries of the current transformers in parallel so that total output current, measured at points K and J, should be 300 ma.

2. Energize a-c test current. Check for 300-ma reading at sockets K and J. Results can indicate either (a) all three-bushing-current transformers have the same polarity – 300-ma reading, or (b) one bushing-current transformer has polarity opposite remaining two – 100-ma reading. Should one transformer possess opposite polarity, be sure to refer to the circuit of figure 31 as a guide during further trouble shooting.

3. De-energize a-c test current and remove jumper wires from receptacle sockets.

Output Test for Battery-Charging Current Transformer

1. Energize 100-ampere a-c test current.

2. Measure current at sockets K and L of receptacle. Value should fall between 40 and 60 milliamperes.

3. Readings outside this range indicate insufficient, or excessive, current to maintain the control battery at the optimum voltage level.

REPLACEMENT INSTRUCTIONS FOR CIRCUIT COMPONENTS

All circuit components associated with the recloser frame, head casting, and operating mechanism except the trip solenoid, rotary solenoid, microswitch 1, and mercury switch 2 can be replaced without detaching the recloser mechanism from the head casting. Instructions for replacing bushing CT's, mercury switch 3, and the 0.2-MFD capacitor are given first.

A 100-watt soldering iron will meet all requirements for repair work. When resoldering lead connections, use only resin core solder. M-E will assume no responsibility for components having leads connected by means of acid core solder.

0.2-MFD Capacitor

Label lead connections to the capacitor and proceed as follows:

1. Heat solder joints and disconnect leads.
2. Remove two screws that secure capacitor to recloser frame.
3. Replace by reversing above procedure. Be sure to reconnect leads to proper capacitor terminals.

NOTE: If battery-charging current transformer is to be replaced, do not reconnect leads to capacitor until new transformer is installed.

Battery-Charging Current Transformer

Label leads to the current transformer and shunting resistor. Then proceed as follows:

1. Cut the leads close to the current transformer.
2. Disconnect the flexible bushing lead.
3. Remove the two screws that secure the current transformer to the head casting. Bushing CT is now free to be removed.
4. Replace current transformer by reversing the above procedure. Be sure to use spacers between the transformer mounting supports. Replacement transformers are equipped with six-inch leads, which can be trimmed as required. When splicing connections, be sure the proper leads are connected before soldering. Be sure to wrap all splices with electrical tape and observe soldering precautions recommended above.

Sensing-Bushing Current Transformers

Replacement of phase A, phase B, and phase C current transformers is identical. These transformers are installed as described above under battery-charging transformer instructions.

Mercury Switch 3

Refer to figure 23. Disconnect leads from terminals A and G and proceed as follows:

1. Loosen two screws that secure nylon mounting straps to lever pinned to main reclosing shaft.
2. Slip mercury switch from mounting straps when screws are loosened sufficiently.
3. Be sure to replace mercury switch so that lead wires are furthest from the rotary solenoid. If the end without lead wires is not nearest the rotary solenoid, improper operation of the recloser mechanism will result.

Remove Head Casting for Following Components

To replace the following components – microswitch 1, mercury switch 2, rotary solenoid, and trip solenoid – the recloser mechanism must be removed from the head casting as described on page 14.

Mercury Switch 2

Refer to figure 33 and install new switch as follows:

1. Disconnect the leads of the mercury switch from the terminal strip.
2. Remove the four nylon mounting straps that secure the sleeving to the recloser frame.
3. Remove the mercury switch from its mounting straps. With a special screwdriver, loosen the screws that secure the nylon straps to manual-lockout shaft lever to allow removal of switch 2.
4. Pull the leads through the protective sleeving attached to inner side of the recloser frame. Thread the leads of the new mercury switch through the sleeving. Thread both leads at the same time. Leads can be secured to a long wire, which can draw the mercury-switch leads through the sleeving.

NOTE: Switch leads need only be connected between the proper terminals for correct operation. Reversing leads between switch terminals has no effect on recloser operation.

5. Pass sleeving through mounting straps and tighten to secure sleeving. Connect switch leads to proper terminals. Position switch as shown in figure 33, and secure mounting straps to lever. If switch is positioned opposite to that illustrated in figure 33, the recloser will operate improperly.

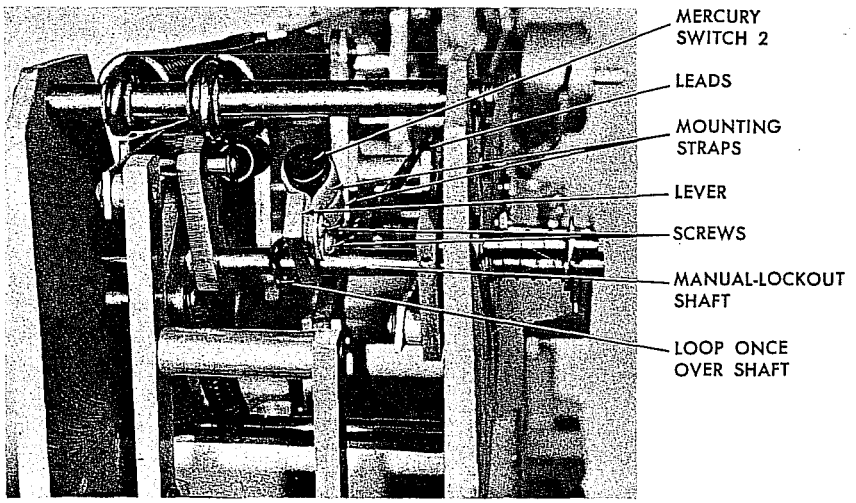

Figure 33
Location of mercury switch 2.

Microswitch 1

Refer to figure 34 and proceed as follows:

1. Disconnect the two white leads from the top of the microswitch.
2. Remove two round-head machine screws to release microswitch from mounting bracket. A hexnut and washer will be released from the threaded end of the screw.
3. Attach new microswitch to mounting bracket. Adjust microswitch so that roller lever just touches base of switch when roller rides on cam. When roller is off cam, it should be just clear of flat of cam as shown in figure 34. When adjustment is completed, tighten machine screws.
4. Reconnect leads to two terminals nearest rotary solenoid as shown.

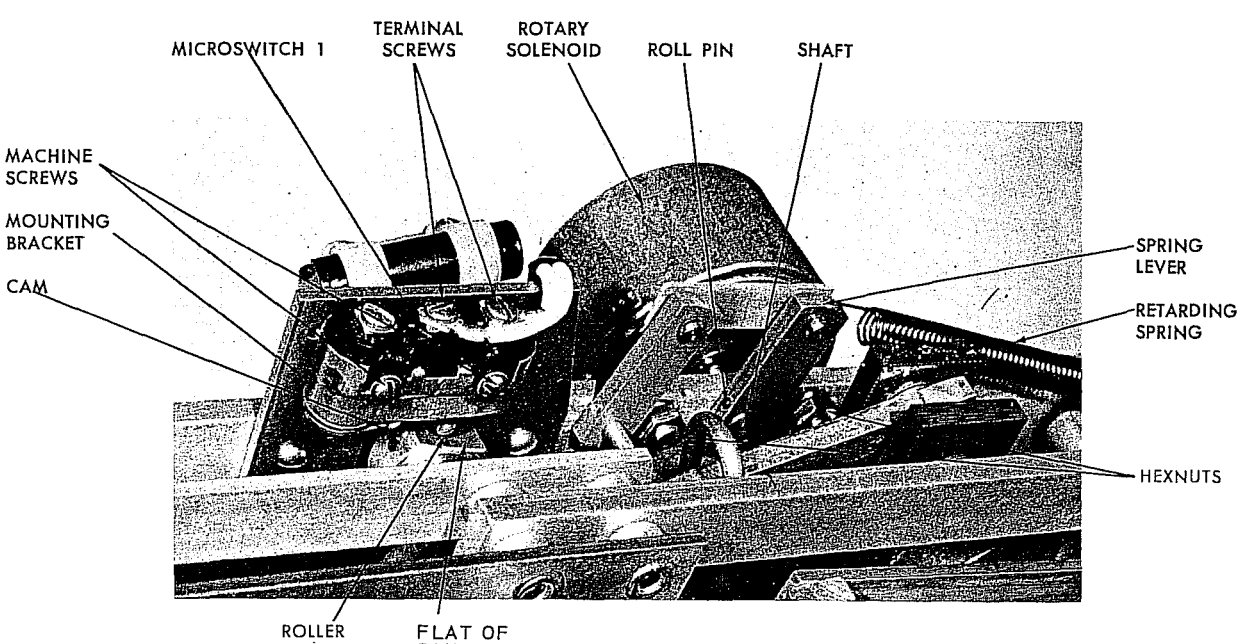

Figure 34
Location of microswitch 1.

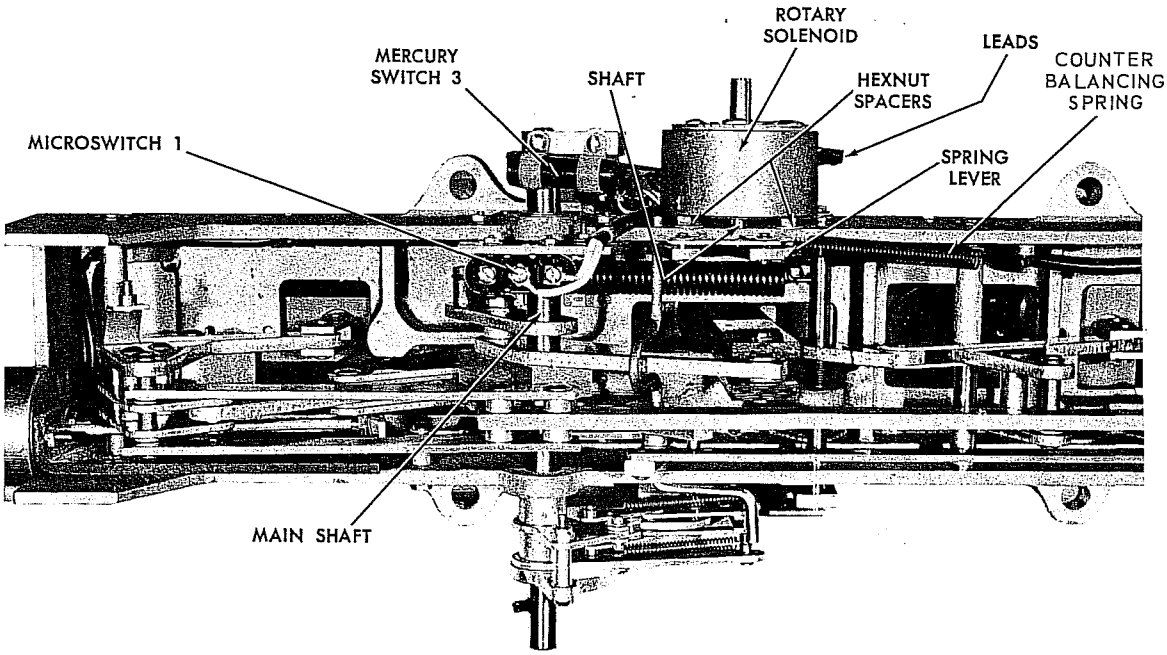

Figure 35
Top view of rotary solenoid and associated components.

Rotary Solenoid

Refer to figures 23 and 35 and proceed as follows to replace the rotary solenoid:

1. Drive out the roll pin that secures the spring lever to the rotary-solenoid shaft. Detach retarding spring from cotter pin.
2. Remove hexnuts and lock washers that secure the rotary solenoid to the recloser frame. Disconnect solenoid leads from the terminal block and remove rotary solenoid.
3. Remove hexnut spacers and washers from rotary-solenoid mounting studs and attach to new solenoid. Install new rotary solenoid by reversing the foregoing procedure. Be sure solenoid leads are connected to correct terminals. Refer to figures 31 and 23.

Trip Solenoid

The trip solenoid, figure 36, is replaced as follows:

1. Disconnect leads from terminals A and B of the terminal block.
2. Loosen the hexnut that secures the nylon mounting strap to allow lead sleeving to slip through freely.
3. Remove two socket-head set screws that secure the trip solenoid to the mounting bracket. Detach trip solenoid from bracket. Two lock washers will be released.

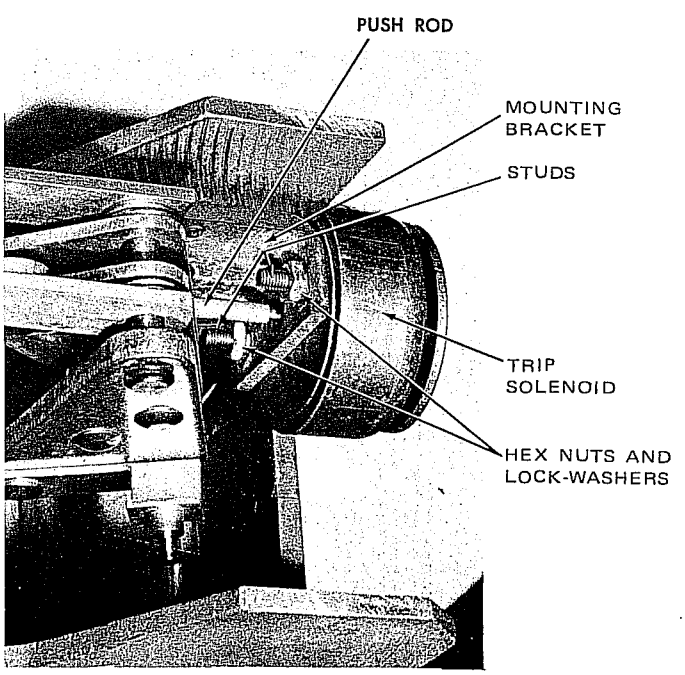

Figure 36
Properly installed trip solenoid.

4. Install new solenoid by reversing above procedure. Pass leads through nylon mounting strap and grommet in mechanism frame. Connect leads in any order. The trip solenoid is not polarity sensitive.

PARTS LIST FOR TYPE RE RECLOSER INTERRUPTING MECHANISM
(Units Below Serial No. 1001)

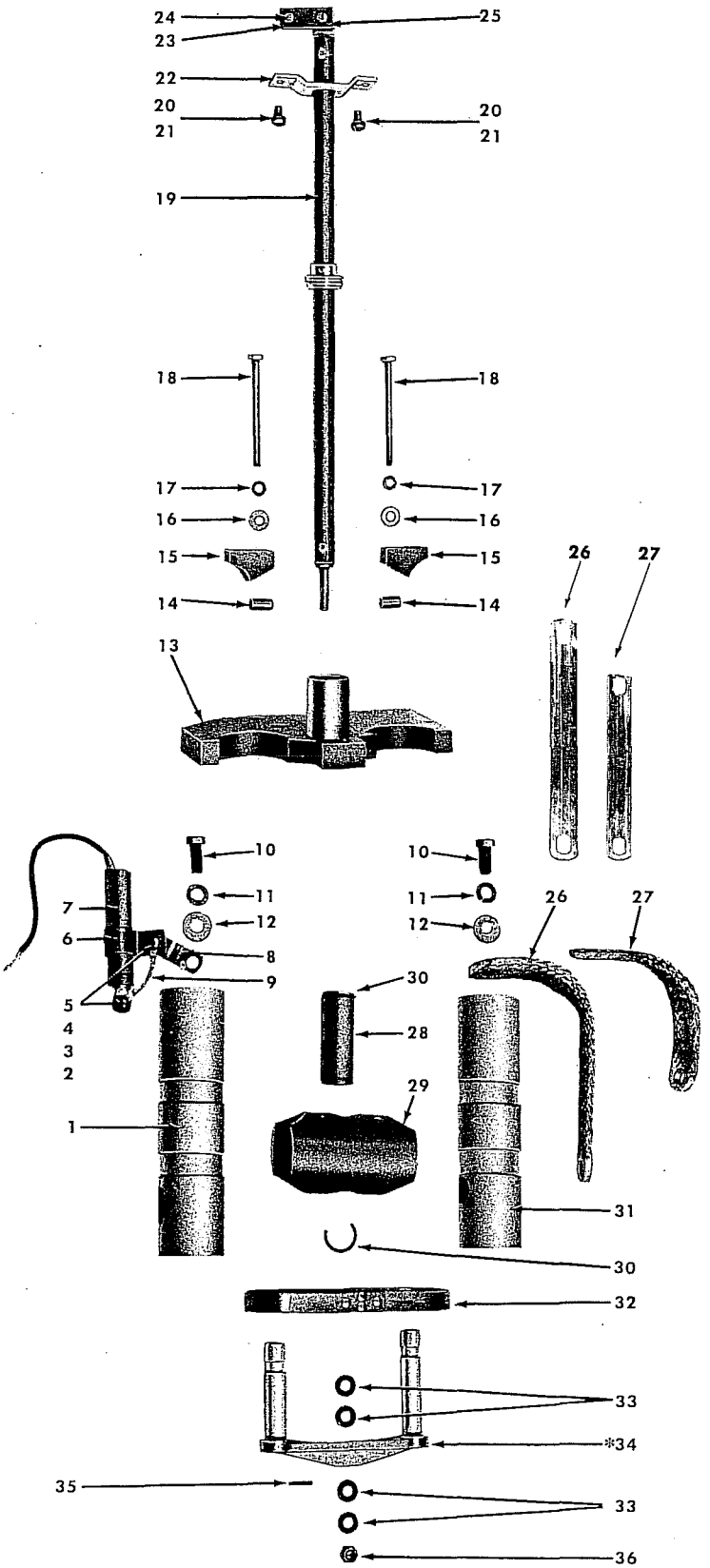

Item No.	Description	Catalog Number
1	Stationary exhaust contact tube assembly for phases A or B	†KA548R
	Stationary exhaust contact tube assembly for phase C	†KA545R
2	Mach screw, ¼"-20 UNC2 x ½", brass rd hd	KP473
3	Washer, No. 14L plain, brass	KP818
4	Lock washer, ¼" med, phos brz.	KP347
5	Mach screw nut, ¼"-20UNC2, brass hex	KP274
6	Fuse bracket (included with item 7)	KP714R
7	Closing coil fuse assembly Add number to indicate voltage rating: 1 – 4.16 to 4.8 kv and 6.0 kv (color band black) 2 – 7.2 to 8.32 kv and 11.0 kv (color band yellow) 3 – 12.0 to 14.4 kv (color band one red) 4 – 2.4 kv (color band two red)	KA259R——
8	Fuse terminal bracket	KP257L
9	Fuse wire jumper assembly	KA28W
10	Mach bolt, ⅜"-24UNF2 x ⅞", silver bronze hex head	KP729
11	Lock washer, ⅜" x .141" x .094", phos brz.	KP326
12	Washer, ⅞" x 25/64" x .064", brass	KP986
13	Contact mounting assembly for phase C	KA326R
	Contact mounting assembly for phases A and B	KA325R
14	Wedge-rod nut	KP381R
15	Fiber tube wedge	KP380R
16	Flat washer, ⅝" x 17/64" x .065", stl tin pl	KP344
17	Lock washer, ¼" x .109" x .062", stl	KP337
18	Cap screw, ¼"-20UNC2 x 3¼", stl hex hd	KP203
19	Contact lift rod assembly	KA176R
20	Mach screw, ¼"-20UNC2 x ½", stl rd hd	KP605
21	Lock washer, ¼" x -109" x .062", stl.	KP337
22	Contact lift rod guide for phases A and B	KP207R
	Contact lift rod guide for phase C	KP208R
23	Retaining ring, WA516	KP76
24	Contact link pin	KP3125A2
25	Lift rod link	KP167R
26	Solid lead, phase A and C, use 5 per bushing	KP3250A1
27	Solid lead, phase B, use 5 per bushing, source side	KP3250A3
28	Lift rod guide tube	KP55L
29	Cross-blast tube	KP56L
30	Retaining ring, X50-238, open type	KP80
31	Stationary generating contact tube assembly	†KA544R
32	Contact tube locking band	KA98R
*33	SAE washer, 5/16", stl. (see item 64 for present reclosers)	KP350 †KA538R
*34	Moving contact yoke and bayonet assembly (see item 63 for present reclosers)	†KA538R
35	Roll pin, ⅛" x 13/16", stl.	KP506
36	Stop nut, 5/16"-24UNF3, elastic Sleeve, phase B load side lead	KP2020A2 KP1106R

PARTS LIST FOR TYPE RE RECLOSER INTERRUPTING MECHANISM (Units Below Serial No. 601)

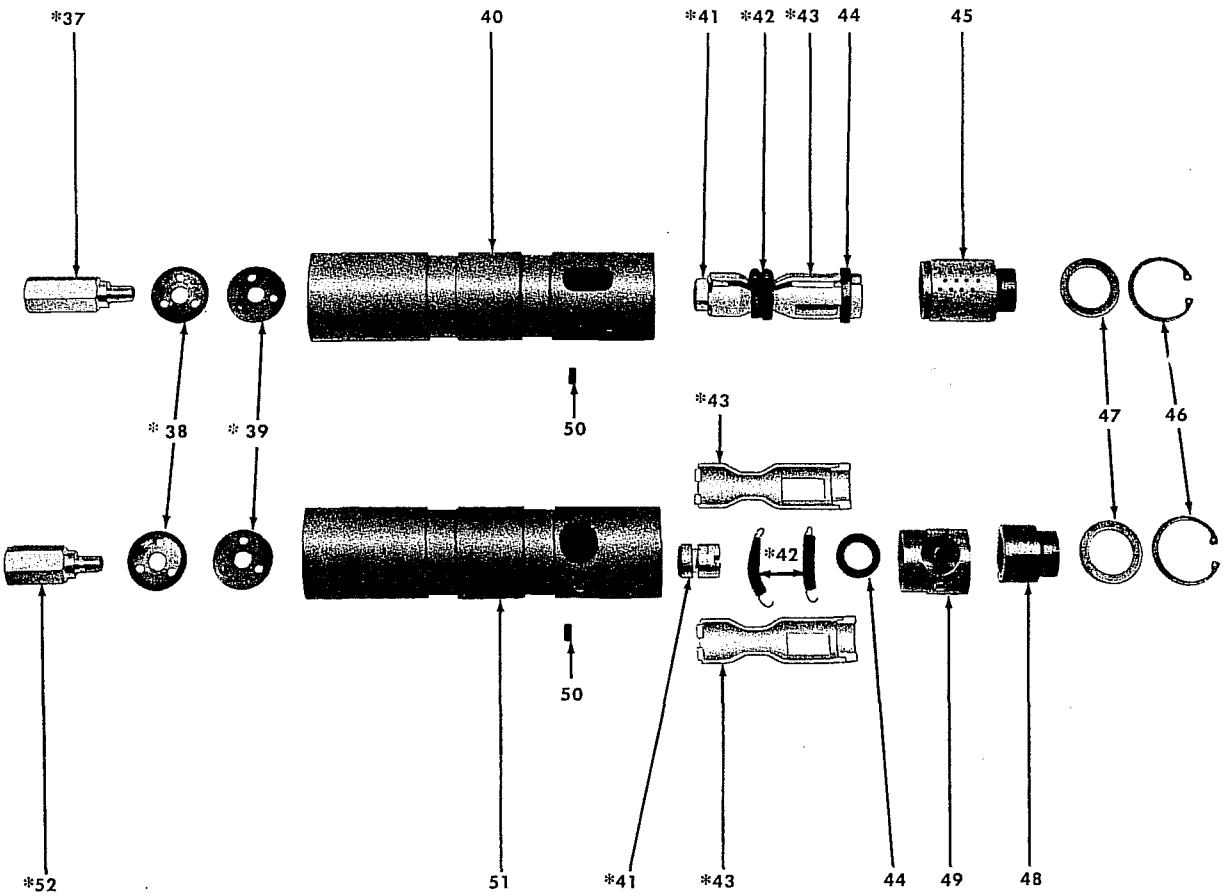

Item No.	Description	Catalog Number
*37	Exhaust tube terminal stud	KP60L
*38	Upper retaining washer	KP170L
*39	Lower retaining washer	KP52L
40	Stationary exhaust contact tube for phase C	KP708R
	Stationary exhaust contact tube for phases A and B	KP57L
*41	Contact stud, silver plated	KP59L
*42	Contact garter spring	KP95L
*43	Contact shoe, silver plated	KA29L
44	Shock absorber ring	KP1257R
45	Vented fiber arcing tube	KP216L
46	*Snap ring, No. 5000-14S, Truarc	KP90
47	Bottom retaining washer	KP275L
48	Fiber bayonet guide tube	KP51L
49	Fiber arcing tube	KP62L
50	Fiber locking pin	KP274L
51	Stationary generating contact tube	KP58L
*52	Generating tube terminal stud	KP215L

NOTE: For increased service life a stationary contact assembly of an advanced design can be ordered for reclosers below serial no. 601. This is described in Bulletin 281-21SC-19. For a stationary contact assembly for the generator tube, order Kit No. KA876R1.

For a stationary contact assembly to be utilized in the exhaust tube, order Kit No. KA876R2. These kits include items 52 thru 65.

PARTS LIST FOR TYPE RE RECLOSER INTERRUPTING MECHANISM
(Units Between Serial Nos. 600 and 1001)

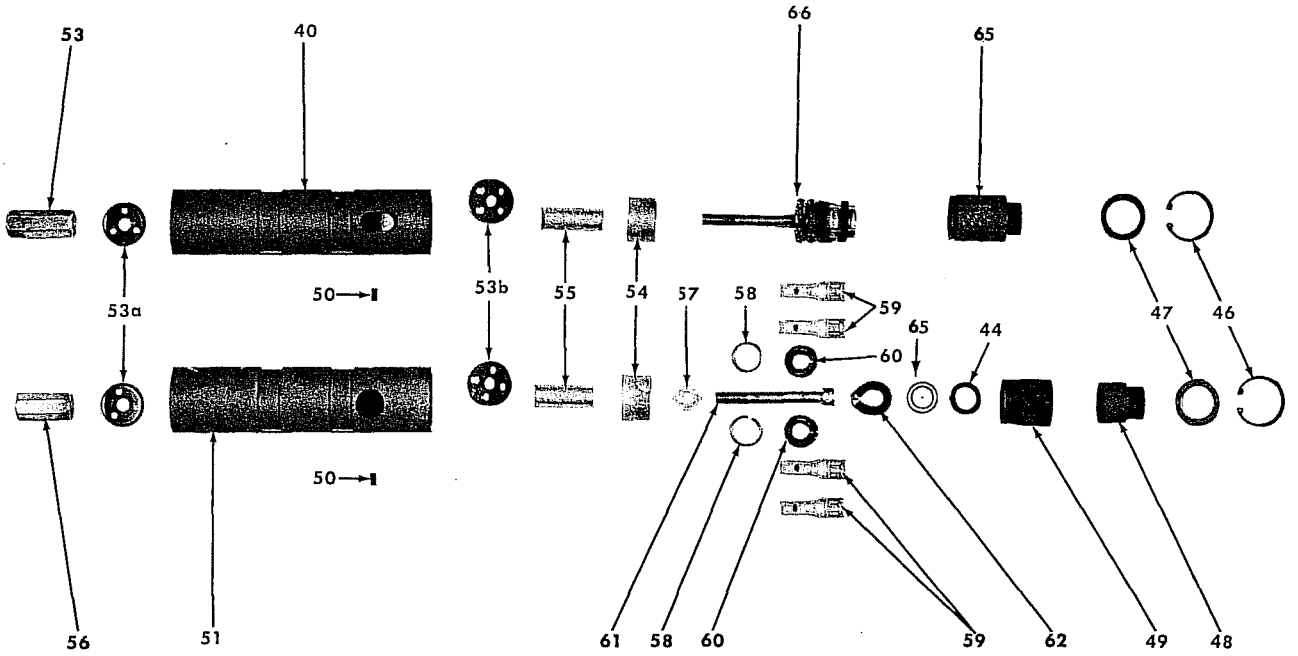

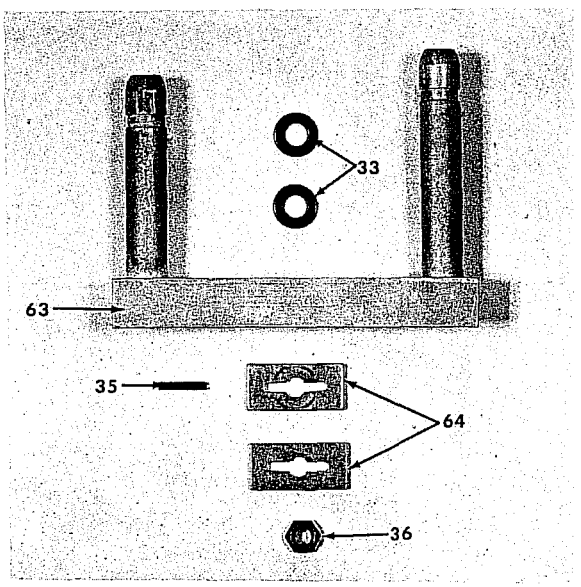

Item No.	Description	Catalog Number
53	Exhaust tube contact nut, long	KP1518R1
53a	Upper retaining washer	KP1595R
53b	Lower retaining washer	KP1516R
54	Contact sleeve	KP1512R
55	Spacer, $^{11}/_{16}$"	KP3012A3
56	Generating tube contact nut, short	KP1518R2
57	Contact retainer	KP1514R
58	Spring spacer	KP1513R
59	Contact arm assembly	KA539R
60	Contact spring assembly	KA540R
61	Contact stud	KP1515R
62	Garter spring	KP1520R
63	Contact yoke	KA538R
64	Spacer	KP1505R
65	Contact spacer	KP3014A4
66	Stationary contact assembly, includes items 58, 59, 60, 61, 62 and 44.	KA701RE1

NOTE: Items 53 through 65 are used in the arc-interrupting assemblies of RE reclosers above serial no. 600, and supersede items asterisked (*) on pages 23 and 24. Item 63 is directly interchangeable with item 34. Some components of the exhaust and generating tube assemblies (items 1 and 31) have been changed on reclosers above serial no. 600 to improve arc interruption and reduce contact erosion. Exhaust and generating tube assemblies for reclosers from serial no's 600 to 1000 can replace tube assemblies on earlier RE reclosers.

PARTS LIST FOR TYPE RE RECLOSER INTERRUPTING MECHANISM (Units Above Serial No. 1000)

Item No.	Description	Catalog Number	Quantity Per Recloser
1	Contact lift rod assembly, phase C	KA625R1	1
	Contact lift rod assembly, phase A and B	KA625R2	2
2	Groove pin	KP3125A2	6
3	Retaining ring, WA-516	KP76	12
4	Lift rod link	KP167R	6
5	Contact lift rod guide	KP518XRV1	3
6	Mach. screw, ¼"-20UNC2A x ⅝", rd. hd. (stl. parkerize)	KP1028	6
7	Lock washer, ¼", med., (stl. parkerize)	KP822	6
8	Solid lead, use 4 per bushing	KP3250A1	24
9	Retaining ring	KP1665R	6
10	Closing coil fuse assembly Add number to indicate voltage rating 1 – 4.16 to 4.8 kv and 6.0 kv (color band black) 2 – 7.2 to 8.32 kv and 11.0 kv (color band yellow) 3 – 12.0 to 14.4 kv (color band one red) 4 – 2.4 kv (color band two red)	KA259R——	2
11	Fuse bracket, included with item 10	KP714R	2
12	Fuse wire jumper assembly	KA28W1	2
13	Fuse terminal bracket	KP257L	2
14	Mach screw, ¼"-20UNC2 x ½", brass rd.hd	KP473	6

Item No.	Description	Catalog Number	Quantity Per Recloser
15	Washer, No. 14L plain, brass	KP818	6
16	Lock washer, ¼" med., phos brz	KP347	6
17	Mach screw nut, ¼"-20UNC2, brass hex	KP274	6
18	Contact mounting assembly, phase C	KA624R1	1
	Contact mounting assembly, phases A and B	KA624R2	2
19	Machine bolt, ⅜"-24UNF2 x ⅞", silver bronze hex hd	KP729	6
20	Lock washer, ⅜" x 0.141" x 0.094", phos brz	KP326	6
21	Washer, ⅞" x 25/64" x 0.064", brass	KP986	6
22	Spacer	KP3011A	3
23	Retaining ring, XS0-234	KP2006	6
24	Lift rod guide tube	KP1661R	3
25	Stationary generator contact tube assembly	KA622R	3
26	Stationary exhaust contact tube assembly	KA623R	3
27	Cross-blast tube	KP1658R	3
28	Contact tube locking band	KA98R	3
29	Contact yoke assembly	KA538R	3
30	Washer, 5/16" SAE, steel	KP350	12
31	Spacer	KP1505R	6
32	Roll pin, ⅛" x 13/16" steel	KP506	3
33	Stop nut, elastic	KP2020A4	3

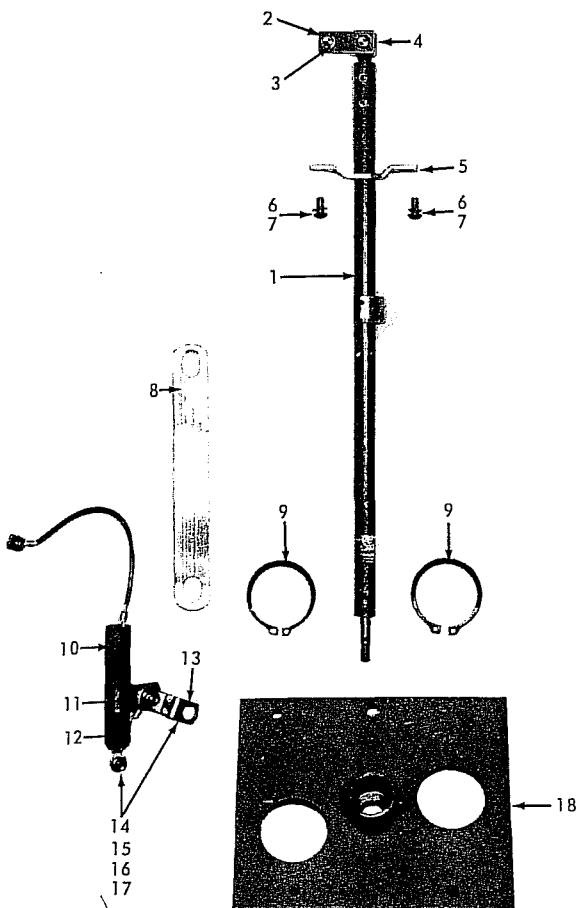

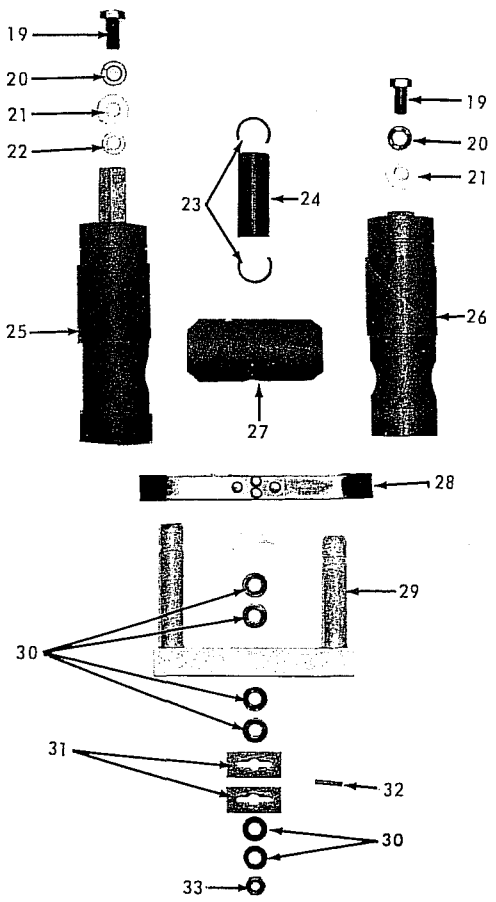

PARTS LIST FOR TYPE RE RECLOSER INTERRUPTING MECHANISM
(Units Above Serial No. 1000)

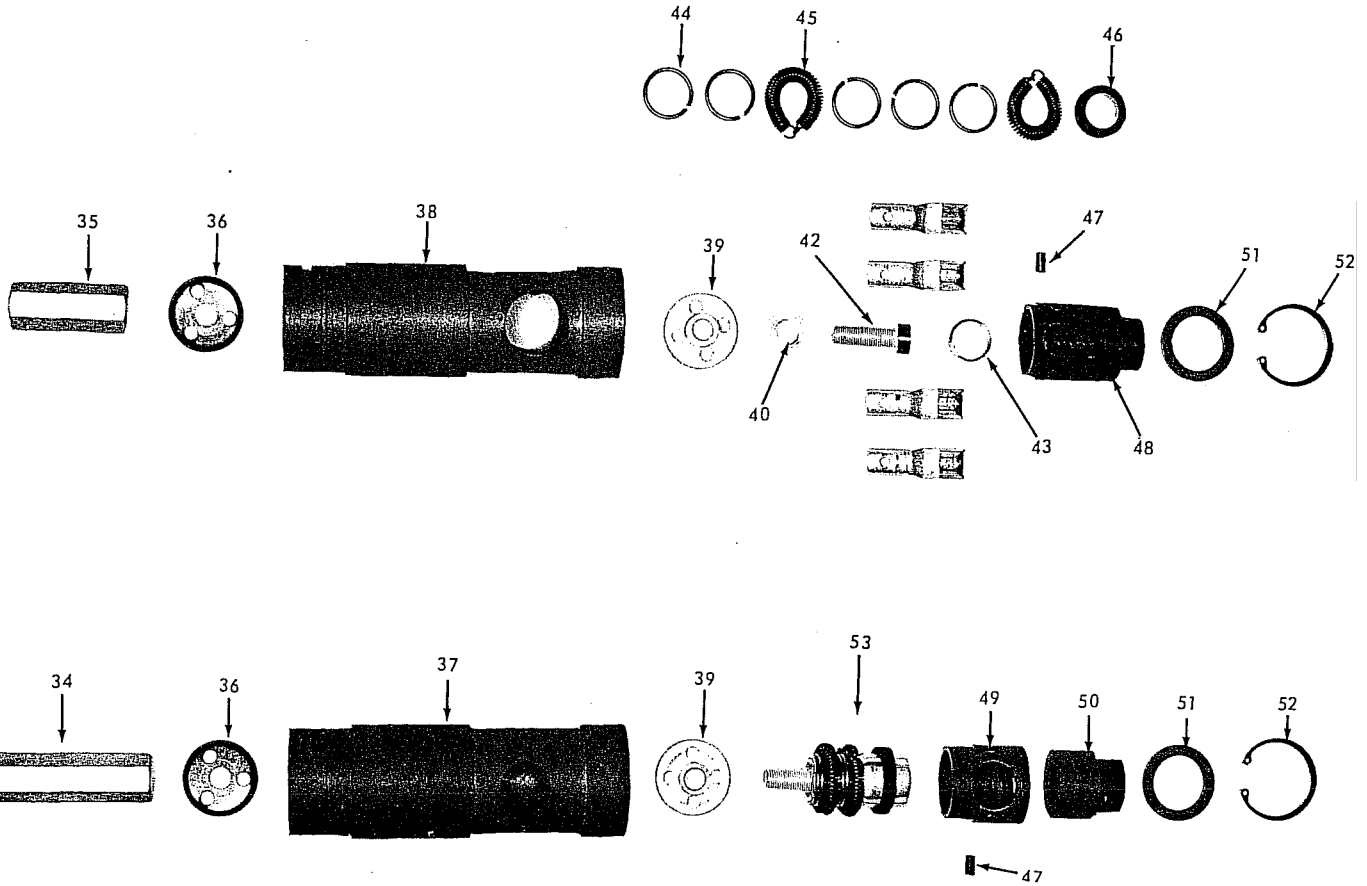

Item No.	Description	Catalog Number	Quantity Per Recloser
34	Contact nut, generator tube	KP1518R3	3
35	Contact nut, exhaust tube	KP1518R1	3
36	Retaining washer	KP1595R	6
37	Generator tube	KP1657R	3
38	Exhaust tube	KP1656R	3
39	Contact support	KP1659R	6
40	Contact retainer	KP1514R	6
41	Contact arm assembly	KA539R	24
42	Fillister screw	KP1694R	6
43	Spacer	KP3014A4	6
44	Spacer	KP1513R	30
45	Garter spring	KP1520R	12
46	Shock absorber ring	KP1257R	6
47	Dowel	KP3054A8	6
48	Exhaust blast block	KP216L	3
49	Blast baffle	KP62L	3
50	Tube plug	KP51L	3
51	Washer	KP275L	6
52	Snap ring, No. 5000-145, Truarc	KP90	6
53	Stationary contact assembly, includes items 41, 42, 44, 45, 46.	KA701RE2	6

PARTS LIST TYPE RE RECLOSERS

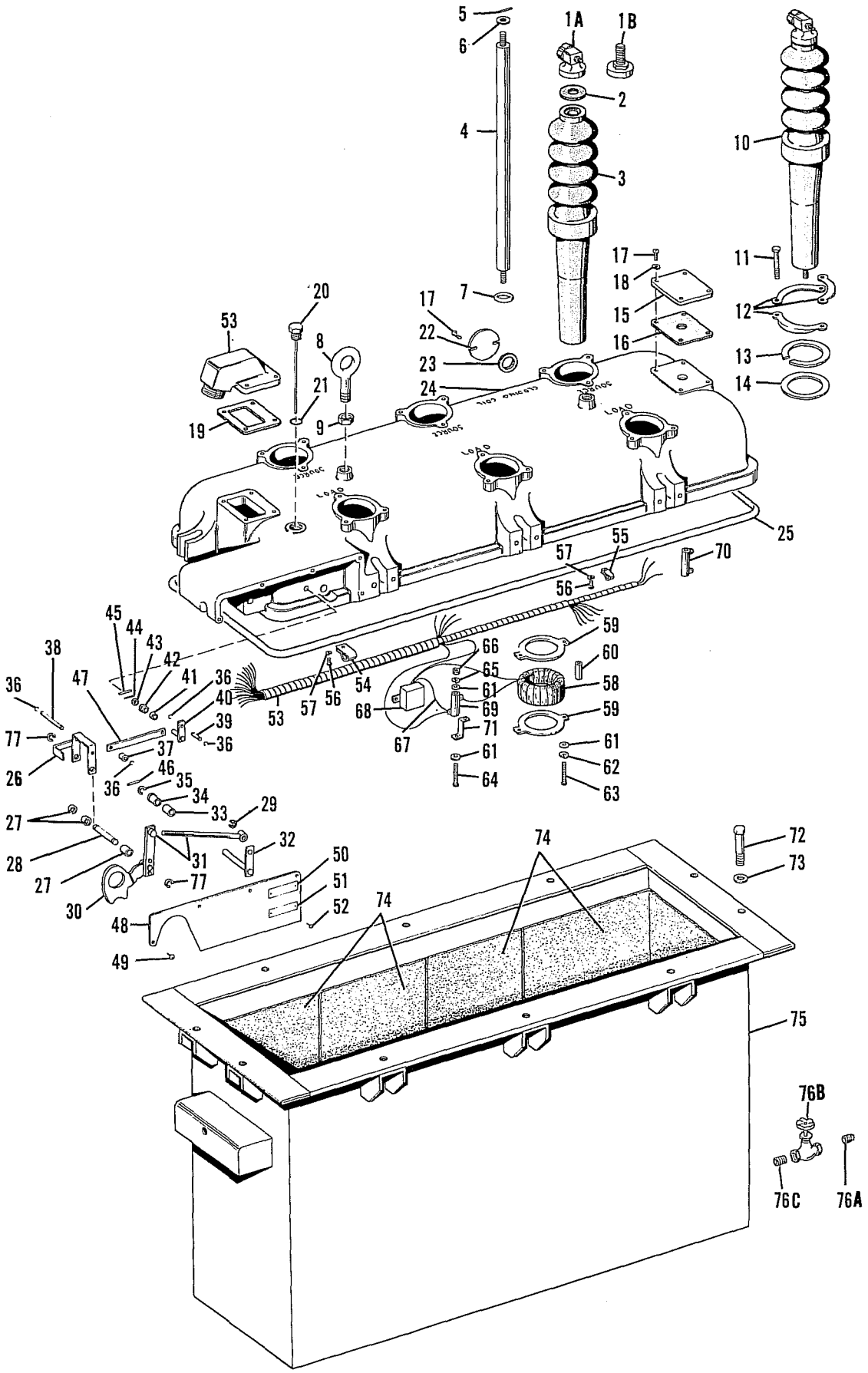

PARTS LIST TYPE RE RECLOSERS

Item No.	Description	Catalog Number	Quantity Per Recloser
1A	Terminal assembly, No. 2 solid through 350 MCM	KA329R	6
1B	Threaded terminal stud, 1⅛"-12 x 2⅛", tin plated	KP1360R	6
2	Bushing terminal gasket	KP120L	6
3	Porcelain bushing – standard	KP1110R	6
	Porcelain bushing – standard, for use with BCT	KP171W	6
	Porcelain bushing – 17" creepage distance	KP1578R	6
	Porcelain bushing – 17" creepage distance for use with BCT	KP186W	6
4	Conductor rod	KP1070R1	6
	Conductor rod, for use with BCT	KP1070R5	6
5	Roll pin, ⅛" x 15/16" large	KP501	6
6	Washer	KP1071R	6
7	Washer	KP157GN3	6
8	Lifting eyebolt	KP1104R	2
9	Pal nut, ⅝"-11UNC2, galv.	KP2064A7	2
10	Bushing assembly – standard	KA354R	6
	Bushing assembly – standard for use with BCT	KA489R	6
	Bushing assembly – 17" creepage distance	KA561R	6
	Bushing assembly – 17" creepage distance for use with BCT	KA533R	6
11	Mach bolt, ⅜"-16UNC2 x 2" sstl hex hd	KP763	18
12	Bushing clamp	KP1109R	18
13	Bushing clamping ring, aluminum	KP1111R	6
14	Lower bushing gasket	KP1112R	6
15	Cover plate	KP609R	2
16	Mounting gasket for auxiliary switch	KP610R	1
17	Mach screw, ¼"-20UNC2 x ⅝", sstl rd hd	KP613	10
18	Lockwasher, ¼" x .109" x .062", sstl.	KP563	8
19	Terminal box gasket	KP611R	1
20	Oil level dipstick	KA363R	1
21	O-ring gasket	KP2000A9	1
22	Closing-tool port cover	KP246R	1
23	Port-cover plate gasket	KP247R	1
24	Head casting, (includes control shaft bushings, items 34 and 42)	KA840R	1
25	Head gasket	KP120R	1
26	Indicator and support assembly	KA19RE	1
27	Spacer	KP3013A11	3
28	Groove pin	KP3126A4	1
29	#WA514 retaining ring	KP75	4
30	Lockout handle assembly	KA621R	1
31	Link rod and pin assembly	KA314R	1
32	Handle lever assembly	KA320R	1
33	Spacer	KP3010A6	1
34	Handle shaft bearing (included with item 24)	KP259R	1
35	#WA516, retaining ring	KP76	1
36	#WA510, retaining ring	KP72	3
37	Spacer	KP3006A9	1
38	Groove pin	KP3123A12	1
39	Groove pin	KP3123A3	1
40	Shaft and lever assembly	KA319R	1
41	Spacer	KP3007A8	1
42	Shaft bearing (included with item 24)	KP1055R	1
43	Washer, 9/16" x .260" x .040", brass	KP399	1
44	Cotter pin, 3/32" x ½", brass	KP302	1
45	Roll pin, 3/32" x ½"	KP504	1
46	Roll pin, ⅛" x ¾"	KP502	1
47	Link	KP1059R	1
48	Sleet hood cover plate	KP283R	1
49	Self-tapping screw, No. 12 x ½", sstl	KP50	5
50	Serial number nameplate	KP190RE	1
51	Voltage rating nameplate, add correct number: 1 – 2.4 kv; 2 – 4.16 to 4.8 kv; 3 – 7.2 to 8.32 kv; 4 – 12.0 to 13.8 kv; 5 – 14.4 kv (Item 51 is also included with item 89)	KP567R_____	1
52	Self-tapping screw, No. 4 x 3/16", sstl	KP21	8
53	Receptacle wiring duct assembly	KA33RE1	1
54	Cable clamp	KP2006A2	4
55	Cable clamp	KP2006A1	2
56	Machine screw, #8-32UNC x 5/8", lg rd hd stl cad pl	KP678	6
57	Lockwasher, #10 med sstl	KP994	6
58	Current transformers	KP144RE	4
59	Support, current transformers	KP145RE	8
60	Spacer	KP3009A38	8
61	Washer, #14S, plain, brass	KP339	16
62	Lockwasher, 18-8, ¼" x 0.109" x 0.062", sstl	KP563	8
63	Cap screw, ¼"-20NC2 x 2¼", lg hex hd stl cad pl	KP798	8
64	Machine screw, #10-24NC2 x 2½" lg rd hd stl cad pl	KP668	4
65	Lockwasher, #10 med.	KP564	4
66	Mach screw nut, #10-24NC2 hex cad	KP272	4
67	Lead wire	KP5339A1050	2
68	Capacitor, #23355, 0.2 MFD, Potter Co. 2500 VDCW		1
69	Resistor, 1K, 25W	KP4022A36	1
70	Resistor, 100 ohm, 25W	KP4022A31	3
71	Terminal bracket	KP96GS	4
72	Cap screw, ½"-13NC2 x 3¼", electro zn and iridite pl hex hd stl	KP752	10
73	Washer, wrought galv.	KP2028A23	10
74	Tank liner kit (above serial no. 1000)	KA867R	1
	Tank liner kit (below serial no. 1001)	KA867R KA829W	1 1
75	Tank assembly	KA88W	1
76A	Pipe plug, ½", solid sq. hd. brass	KP2007A3	1
76B	Gate valve, 100 lb. ½", brass, optional	KA809R	1
76C	Close nipple (included with item 76B)	KP2039A	1
77	Retaining ring, WA518, stl	KP79	4

PARTS LIST FOR TYPE RE RECLOSER

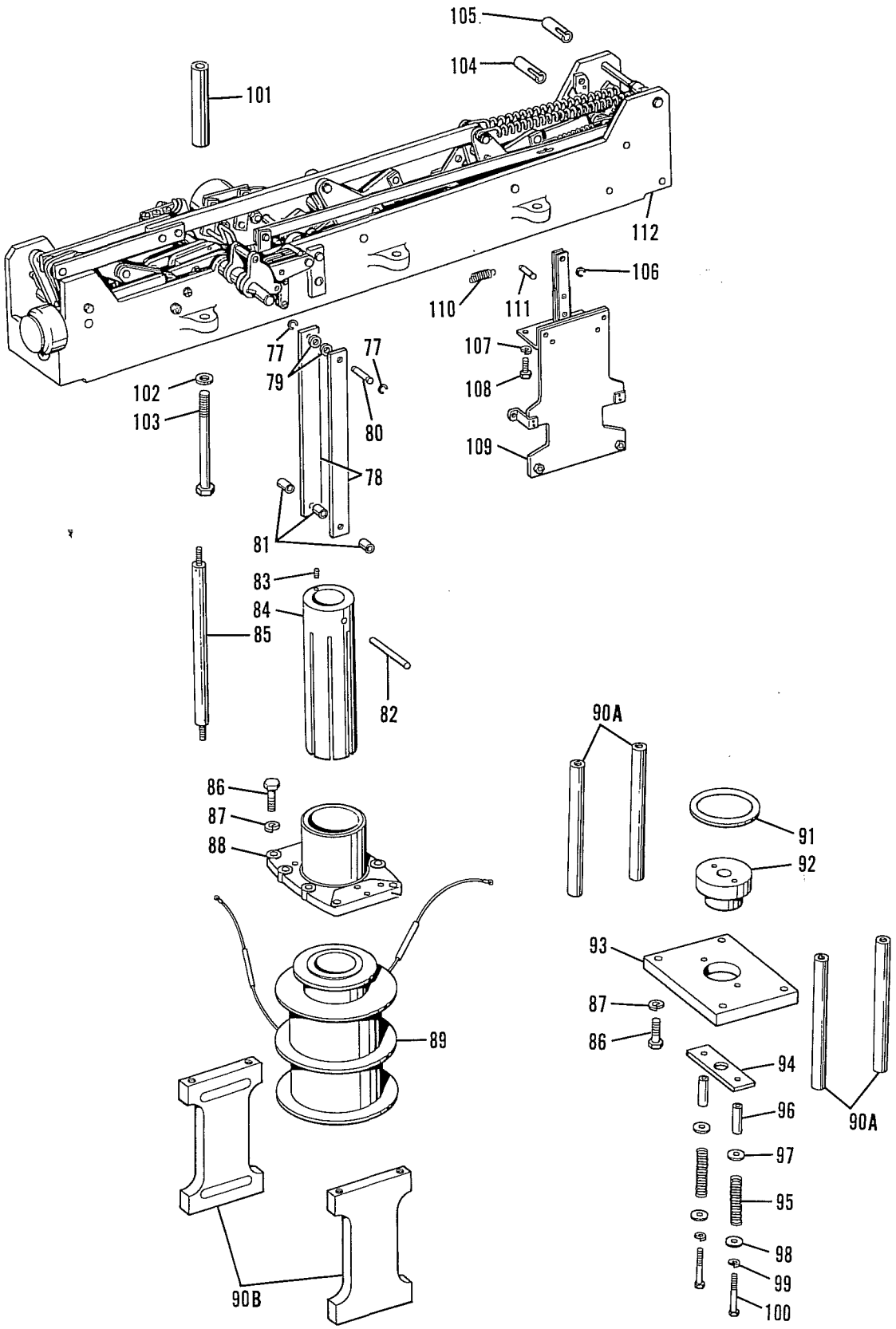

PARTS LIST FOR TYPE RE RECLOSER

Item No.	Description	Catalog Number	Quantity Per Recloser
78	Insulating link for closing plunger	KP103R	2
79	SAE washer, $^{13}/_{16}$" x $^{13}/_{32}$" x .062", zinc pl	KP1102	2
80	Plunger link pin	KP3126A2	1
81	Spacer for plunger link	KP3010A1	3
82	Plunger link pin	KP113R	1
83	Set screw, No. 10-32 x ¼", pin lock	KP394	1
84	Closing plunger	KP104R	1
85	Insulating spacer	KA62R	13
86	Cap screw, ⅜"-16UNC2 x 1½", stl hex hd	KP419	8
87	Lockwasher, ⅜" med. steel	KP556	4
88	Upper solenoid frame	KP100R2	1
89	Closing coil and fuses kit (includes items 51 and 91), 60 cycle 50 cycle 40 cycle	KA834R _____ KA861R _____ KA860R _____	1
	Add correct number: 1 – 2.4 kv, 2 – 4.16 to 4.8 kv; 3 – 7.2 to 8.32 kv; 4 – 12.0 to 13.8 kv, 5 – 14.4 kv; 6 – 6.0 kv; 7 – 125 vdc; 8 – 250 vdc, 9 – 11.0 kv; 10 – 3.3 kv		
90A	Rod, solenoid frame	KP1669R	4
90B	Solenoid frame shoe (Alternate for 90A)	KP102R	2
91	Solenoid gasket	KP389R	1
92	Closing plunger stop	KP1667R	1
93	Bridge plate	KP1668R	1
94	Plate	KP1587R1	1
95	Spring valve lift	KP563R	2
96	Spacer	KP3009A6	2
97	Washer, ½" AN light, stl.	KP1103	1
98	Washer, #14L, brass	KP818	2
99	Lockwasher, ¼", med.	KP337	2
100	Cap screw, ¼"-20UNC2 x 2¼", stl hex hd	KP751	2
101	Head-to-frame spacer	KP227R1	6
102	Lockwasher, ½" med. stl. zn pl	KP1107	6
103	Socket cap screw, ½"-13UNC2 x 4½", stl, hex (black oxide finish or equivalent)	KP2036A3	6
104	Quick-release control lever coupler	KP1177R	1
105	Quick-release counter shaft coupler	KP1056R	1
106	Retaining ring, WA514 , stl.	KP75	7
107	Lockwasher, ¼" x .109" x .062", stl.	KP337	3
108	Cap screw, ¼"-20UNC2 x ¾", stl hex hd	KP735	3
109	Closing solenoid contactor kit	KA852R	1
110	Contact toggle spring	KP141R	2
111	Contactor link pin	KP1306R	1
112	Mechanism frame assembly (see parts list page 36)	KA68RE	1

NOTE: Before serial no. 577 reclosers included one valve seat assembly, one KP108R valve disc, and one KP128R spring. Use items 94 to 100 for replacement.

PARTS LIST FOR TYPE RE RECLOSER
HEAD MECHANISM ASSEMBLY

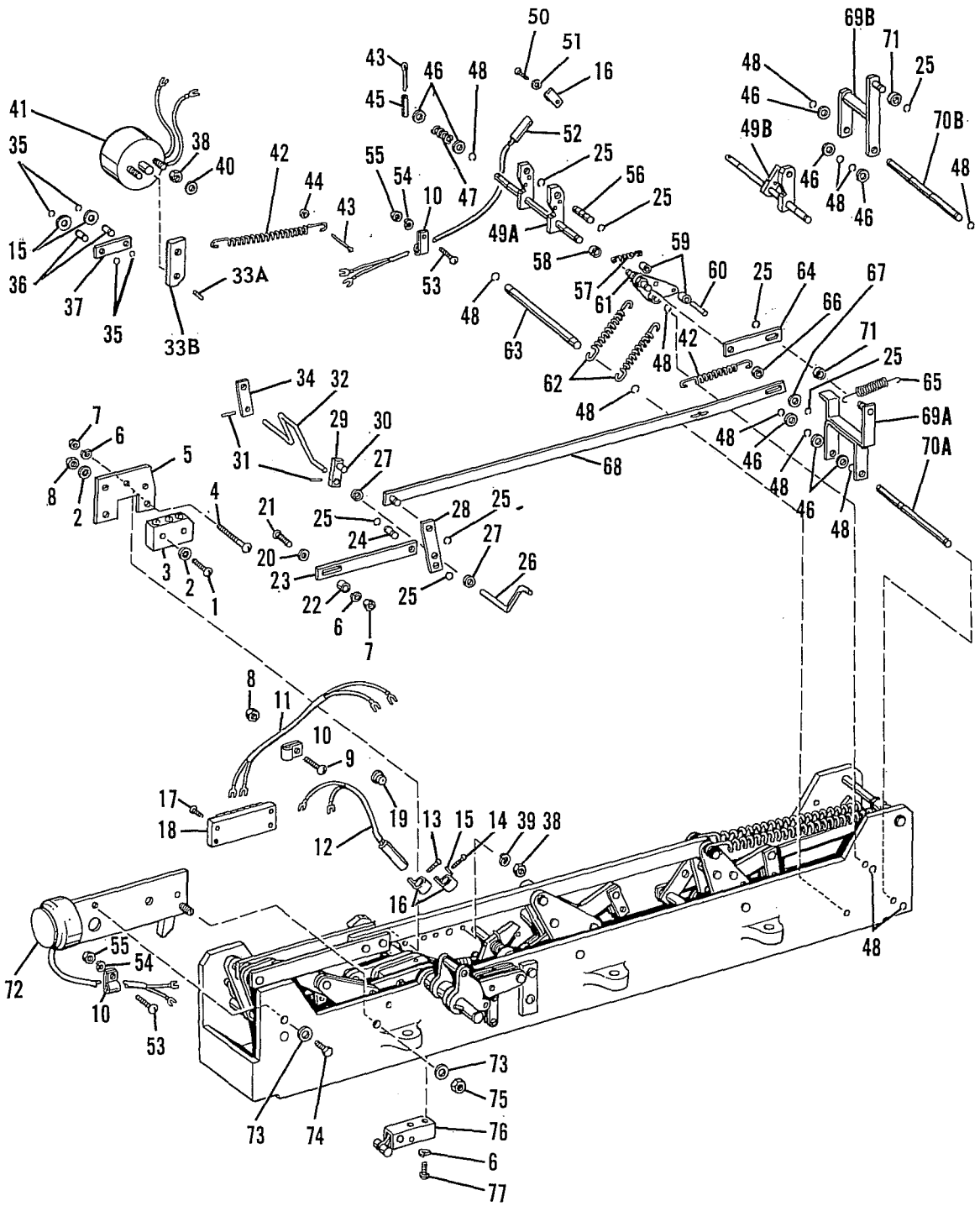

PARTS LIST FOR TYPE RE RECLOSER
HEAD MECHANISM ASSEMBLY

Item No.	Description	Catalog Number	Quantity Per Recloser
1	Machine screw, #6-32NC2 x 1", lg rd hd brass	KP681	2
2	Lockwasher, #6, internal tooth, bronze	KP826	5
3	Switch, hermetically sealed, type 1HS3 with roller lever actuator (Minneapolis-Honeywell)	——	1
4	Machine screw, #10-24NC2 x ¾", lg rd hd, stl, cad	KP497	2
5	Bracket	KP186RE	1
6	Lockwasher, #10 med, stl, cad	KP353	6
7	Hex nut, #10-24NC2, stl, cad	KP272	4
8	Hex nut, #6-32NC2, brass, cad	KP852	3
9	Machine screw, #6-32NC2 x ½" lg rd hd, brass, cad	KP641	1
10	Cable clip	KP2006A8	8
11	Lead wire assembly	KA62RE	1
12	Mercury switch	KP134RE	1
13	Machine screw, #8-32NC2 x ¼", lg rd hd, stl, cad	KP500	1
14	Machine screw, #8-32NC2 x ⅝", lg rd hd, stl, cad	KP669	1
15	Washer, #10L, plain brass	KP560	4
16	Nyloclip, HP-8N, Burndy	KP2006A4	4
17	Machine screw, #6-32NC2 x ⅝", lg fil hd, stl, cad	KP1043	2
18	7-terminal board	KP882	1
19	Grommet, rubber	KP2017A4	1
20	Washer, #10S, plain, brass, cad	KP840	1
21	Machine screw, #10-24NC2 x 1", lg rd hd, stl, cad	KP670	2
22	Spacer	KP133RE	1
23	Link	KP128RE	1
24	Groove pin	KP3124A3	1
25	Retaining ring, WA-514	KP75	10
26	Arm	KP1295R	1
27	Spacer	KP3009A9	2
28	Lever	KP130RE	1
29	Lever, order with item #30	KP118RE	1
30	Pin, order with item #29	KP119RE	1
31	Roll pin, 3/32" x ½"	KP504	3
32	Transfer shaft	KP152RE	1
33A	Roll pin (included in item 41)	KP508	
33B	Lever (included in item 41)	KP121RE	
34	Lever	KP117RE	1
35	Retaining ring, #WA-510	KP72	4
36	Groove pin	KP3123A4	2
37	Link	KP126RE	1
38	Hex nut, ¼"-28NF2, stl, cad	KP290	4
39	Lockwasher, ¼" med	KP337	4
40	Washer, #14S, plain, brass, cad	KP811	3
41	Rotary solenoid assembly	KA12RE	1
42	Spring, counterbalance	KP98L	2
43	Cotter pin, 3/32" x 1", lg, brass	KP433	2
44	Spacer	KP3007A30	1
45	Roll pin, ⅛" x ¾"	KP502	1
46	Washer, flat, 5/16", SAE, stl, cad	KP350	13
47	Spring	KP1176R	1
48	Retaining ring, WA516	KP77	19
49A	Handle shaft assembly (used with items 69A and 70A)	KA15RE	1
49B	Handle shaft assembly (used with items 69B and 70B)	KA15RE	1
50	Self-tapping screw, #6-32NC2 x ½", lg, Type F	KP30	2
51	Washer, #6L, plain, brass	KP555	2
52	Mercury switch subassembly	KA63RE	1
53	Machine screw, #8-32NC2 x ⅝", lg, rd hd, brass, cad	KP669	6
54	Lockwasher, #8 med, phos. bronze, cad	KP813	6
55	Hex nut, #8-32NC2, steel, cad	KP573	6
56	Pin, reset lever	KP280R	1
57	Spring	KP16GS	1
58	Spacer	KP330R	1
59	Spacer	KP3006A6	2
60	Pin, spring anchor	KP282R	1
61	Trip lever assembly	KA17RE	1
62	Spring, bell crank	KP12GS	2
63	Shaft, spring anchor	KP1488R	1
64	Link	KP1147R	1
65	Spring	KP731R	1
66	Spacer	KP3007A1	1
67	Washer, #14S, plain, brass, cad	KP811	1
68	Auxiliary switch bar assembly	KA253R	1
69A	Trip latch lever (used with items 49A and 70A)	KA647R	1
69B	Trip latch lever (alternate-used with items 49B and 70B)	KA13RE	1
70A	Shaft (used with items 49A and 69A)	KP1678R	1
70B	Shaft (alternate-used with items 49B and 69B)	KP125RE	1
71	Spacer	KP3007A8	1
72	Solenoid trip assembly (The solenoid may be ordered separately as part no. KP182RE)	KA55RE	1
73	Flat washer, ¼" SAE, stl cad	KP827	2
74	Cap screw, ¼"-20NC2 x ½" lg hex hd stl cad	KP701	1
75	Hex nut, ¼"-20NC2, stl, cad	KP279	1
76	Cam roller assembly	KA67R	1
77	Machine screw, #10-24NC2 x 7/16", lg, rd hd, stl cad	KP489	2

PARTS LIST FOR TYPE RE RECLOSER
HEAD MECHANISM ASSEMBLY

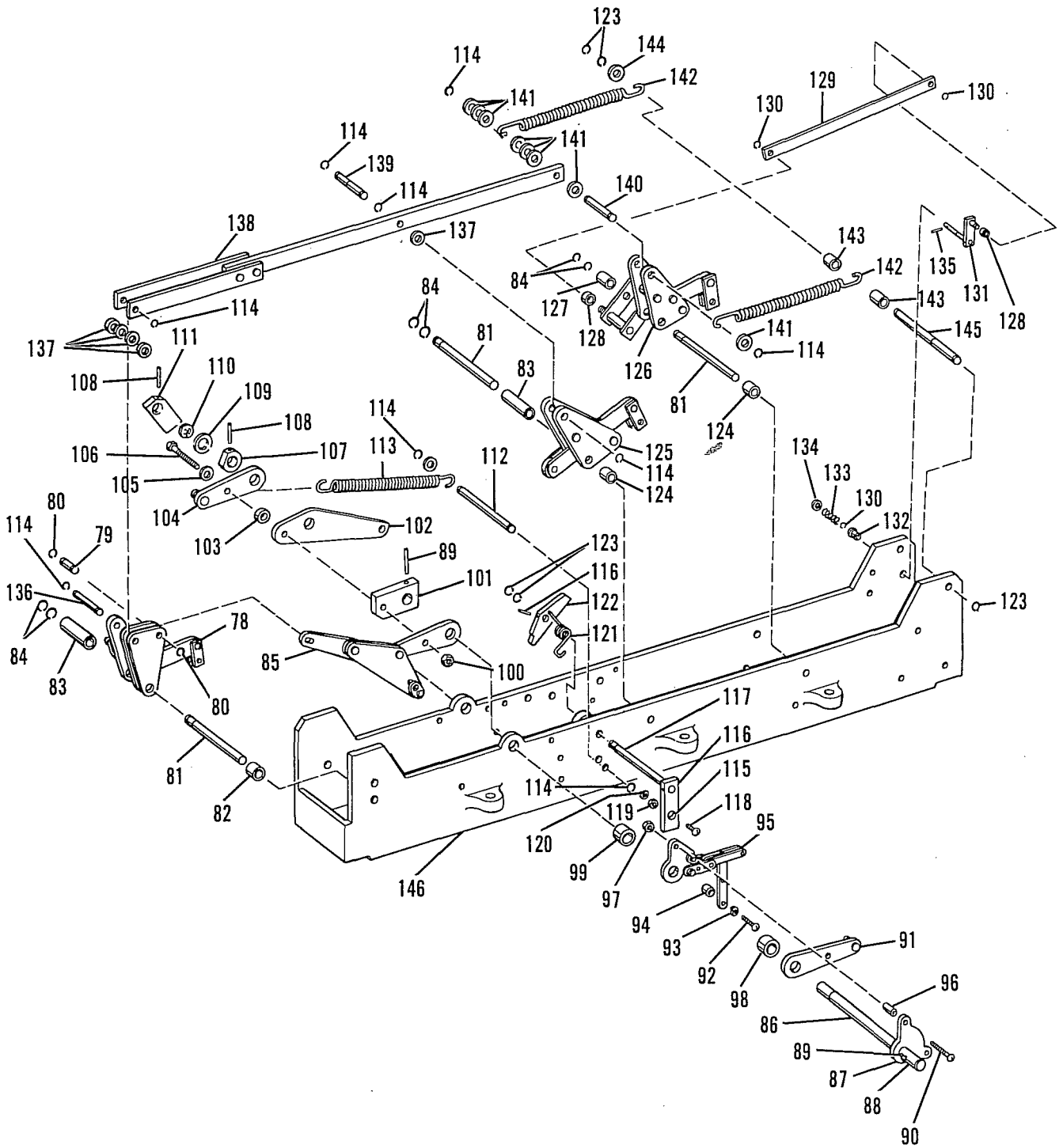

PARTS LIST FOR TYPE RE RECLOSER
HEAD MECHANISM ASSEMBLY

Item No.	Description	Catalog Number	Quantity Per Recloser
78	Contact and toggle support assembly	KA361R	1
79	Toggle pin	KP273R	1
80	Retaining ring #5133-37, Type E	KP86	2
81	Shaft	KP1198R	3
82	Spacer	KP3009A18	1
83	Spacer	KP3009A22	2
84	Retaining ring #WA520	KP100	6
85	Toggle assembly	KP450R	1
86	Reclosing shaft (order only with items 87, 88 and 89)	KP295R	1
87	Roll pin, 1/8" x 1¼", lg. (order only with items 86, 88, and 89)	KP520	1
88	Toggle driver (order only with items 86, 87, and 89)	KP1329R	1
89	Roll pin, 7/32" x 1¼", lg. (order only with items 86, 87, and 88)	KP512	2
90	Machine screw, #10-32NF2 x 1½", lg rd hd, stl, cad	KP630	1
91	Switch driver	KP148R	1
92	Machine screw, ¼"-20NC2 x 1¼", lg rd hd, stl, cad	KP479	2
93	Lockwasher, ¼" med	KP337	4
94	Spacer	KP3007A15	2
95	Switch toggle assembly	KA428R	1
96	Spacer	KP3006A4	1
97	Stop nut, elastic, #10-32NF-2	KP2020A1	1
98	Spacer	KP3015A2	1
99	Spacer	KP3015A3	1
100	Stop nut, 5/16"-24NF-3, elastic	KP2020A2	1
101	Reset lever	KP166R	1
102	Reset lever	KP164R	1
103	Spacer	KP3011A4	1
104	Reset arm and pin assembly	KA17R	1
105	Washer, ¾" x 0.375" x 0.031" thk, brass, cad (optional)	KP2028A4	1
106	Bolt	KP346R	1
107	Cam	KP187RE	1
108	Roll pin, ⅛" x 1", lg	KP518	1
109	Washer	KP2028A4	1
110	Retaining ring, #5133-62, Type E	KP87	1
111	Mounting bracket	KP163RE	1
112	Shaft, spring anchor	KP292R	1
113	Spring, reclosing	KP191R	1
114	Retaining ring, WA516	KP76	8
115	Lever, reset trip (order only with items 116 and 117)	KP194R	1
116	Roll pin, 3/32" x ¾", lg. (order only with items 115 and 117)	KP523	2
117	Shaft (order only with items 115 and 116)	KP153RE	1
118	Machine screw, #10-24NC2 x 1", lg rd hd, stl, cad	KP670	1
119	Hex nut, #10-24NC2, stl, cad	KP272	1
120	Lockwasher, #10 med, stl, cad	KP353	1
121	Spring, reset lever	KP172R	1
122	Lever, reset trip	KP171R	1
123	Retaining ring, #WA518, Type C	KP79	5
124	Spacer	KP3009A17	2
125	Contact and trip arm assembly	KA360R	1
126	Contact and counter arm assembly	KA359R	1
127	Spacer	KP3009A16	1
128	Spacer	KP3007A8	3
129	Counter link	KP183R	1
130	Retaining ring, WA514, Type C	KP75	10
131	Contact lever and shaft assembly	KA318R	1
132	Bearing, shaft	KP1055R	1
133	Spring	KP1180R	1
134	Washer, #14S, plain, brass, cad	KP811	4
135	Roll pin, 3/32" x ½"	KP504	3
136	Groove pin	KP3125A5	1
137	Washer, flat, 5/16", SAE, brz irr	KP1120	13
138	Contact bar assembly	KA13R	1
139	Contact bar pin	KP290R	1
140	Pin	KP3125A9	1
141	Washer, flat, 5/16" AN, stl, zn pl	KP833	8
142	Contact opening spring	KP173R	2
143	Spacer	KP3011A34	2
144	Washer, flat, 3/8" SAE, stl, cad	KP547	1
145	Spring anchor shaft	KP284R	1
146	Frame, operating mechanism	KP189RE	1

Reclosers

Type WE, Three-Phase Maintenance Instructions

14.4 kv ● 560 Amp

Service Information
S280-40-4
Page 1

Replaces 281-355B-1 dated 9/65
No change in text

This manual, bulletin S28O-4O-1, for the Form 2 Type WE electronically controlled reclosers above serial No. 299 covers:

- maintenance of the interrupting mechanism
- operational checks for circuit components attached to the head casting and mechanism frame
- testing of the control cable and bushing current transformers
- replacement of mechanical and electrical co ponents
- replacement parts for the interrupting unit

A separate manual, bulletin 281-27SB-1, is a service manual which covers the electronic control and provides information on general inspection, operational checks, and battery testing and charging. Procedures for testing the recloser and control together are found in the control installation manual, bulletin S280-65-1.

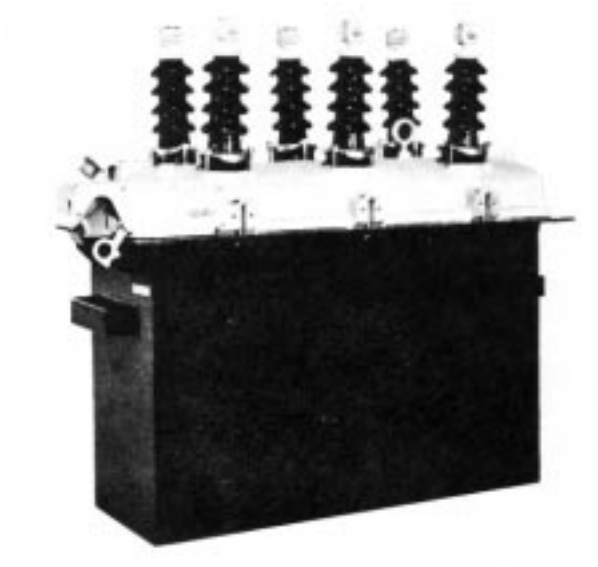

CAUTION: DO NOT ENERGIZE THIS EQUIPMENT OUT OF OIL

ORDER OF CONTENTS

	Page
Introduction	1
Description of Type WE Recloser	2
General Maintenance Information	2
Periodic Field Inspection and Maintenance	4
Shop Maintenance	7
Arc Interrupting Assembly (Serial No. below 1001)	7
Arc Interrupting Assembly (above Serial No. 1000)	9
Closing Solenoid	11
Closing Solenoid Contactor	11
Closing Solenoid Fuses	12
Bushings	12
Removal of Head Casting	13
Mechanism Operation	15
Rating Changes	15
Adjustments	15
Operational Checks	16
Control Cable	16
Circuit Components	16
Bushing Current Transformers	18
Replacement Instructions for Circuit Components	19
Service Parts List	
Interrupting Structure (below Serial No. 1001)	22
Basic Recloser Parts	24
Parts List for Mechanism Frame Assembly	28

These instructions do not claim to cover all details or variations in the equipment, procedure, or process described, nor to provide direction for meeting every possible contingency during installation, operation, or maintenance. When additional information is desired to satisfy a problem not covered sufficiently for the user's purpose, please contact your Cooper Power Systems sales engineer.

COOPER
Cooper Power Systems
Quality from Cooper Industries

January, 1970

DESCRIPTION OF TYPE WE RECLOSER

The Type WE recloser, on cover, is a self-controlled device that protects distribution lines and equipment. This unit consists of a circuit interrupting device, hereafter referred to as the recloser, an electronic control, and a connecting cable. Fault current sensing is achieved by the control which actuates the recloser. Circuit interruption is provided by the recloser.

A Type WE recloser performs similarly to other reclosers in that it trips and automatically recloses. If a fault is temporary, reclosing of the Type WE restores normal service. If the fault is permanent, the recloser senses this by performing a preset number of operations and locking open. All three phases of a Type WE recloser open and lock out simultaneously.

Opening sequences of the recloser can be all fast, all delayed, or any combination of fast followed by delayed operations up to a total of four. Fast operations clear temporary faults before branch-line fuses can be damaged. Delayed openings allow time for fuses to clear so permanent fault s can be confined to smaller sections of line.

Arcs are extinguished in the rugged arc-interrupter assemblies, figure 1, which utilize the proven selfblast principle of arc interruption. Moving contacts are driven by powerful opening springs that are loaded when the recloser is closed.

Closing is accomplished when a line-voltage solenoid is connected across two phases of the distribution line. This connection occurs when a rotary solenoid, located inside the recloser, allows the closing solenoid contactor to close.

A trip-free control lever, linked with the interruption mechanism, is provided to lock the recloser open manually. This lever, located under the sleet hood, cannot be used to close the recloser, but it must be in the CLOSED position before the electronic control can cause the recloser to close. A contact position indicator, linked to the interrupting mechanism but independent of the control lever, is provided under the sleet hood.

GENERAL MAINTENANCE INFORMATION

Maintenance Ensures Reliable Performance

Reclosers are widely applied to increase service continuity, reduce system operating costs, and increase revenue. The Type WE recloser performs all the functions by combining the flexibility and reliability of electronic control with proven interrupting mechanisms to achieve superior distribution-circuit protection. However, the Type WE can perform at peak efficiency only if it is maintained in good condition. While maintenance is relatively easy and inexpensive it is important.

Oil plays an essential role in arc interruption, insulation, and reclosing. Arc interruption, however, contributes to oil decomposition. For this reason, the oil steadily diminishes in dielectric strength as the recloser continues to clear fault currents. Breathing action also can result in moisture absorption by the oil, thus lowering its insulation value. For effective recloser operation, oil must be replaced before it deteriorates beyond a safe level.

Climate and Duty Determine Maintenance Intervals

Frequency of maintenance depends upon local climatic conditions and the interrupting duty imposed on the recloser. L-M recommends the unit be inspected completely, cleaned, and filled with new oil at least once each year. If the Type WE operates through a duty cycle in less than one year, periodic maintenance should be performed then.

The NEMA standard duty cycle for power class III reclosers is as follows:

Number of Recloser Operations	Fault Current, Percent of Interrupting Rating	Maximum Circuit X/R Value
28	15 to 20	3
20	45 to 55	7
10	90 to 100	14
Total 58		

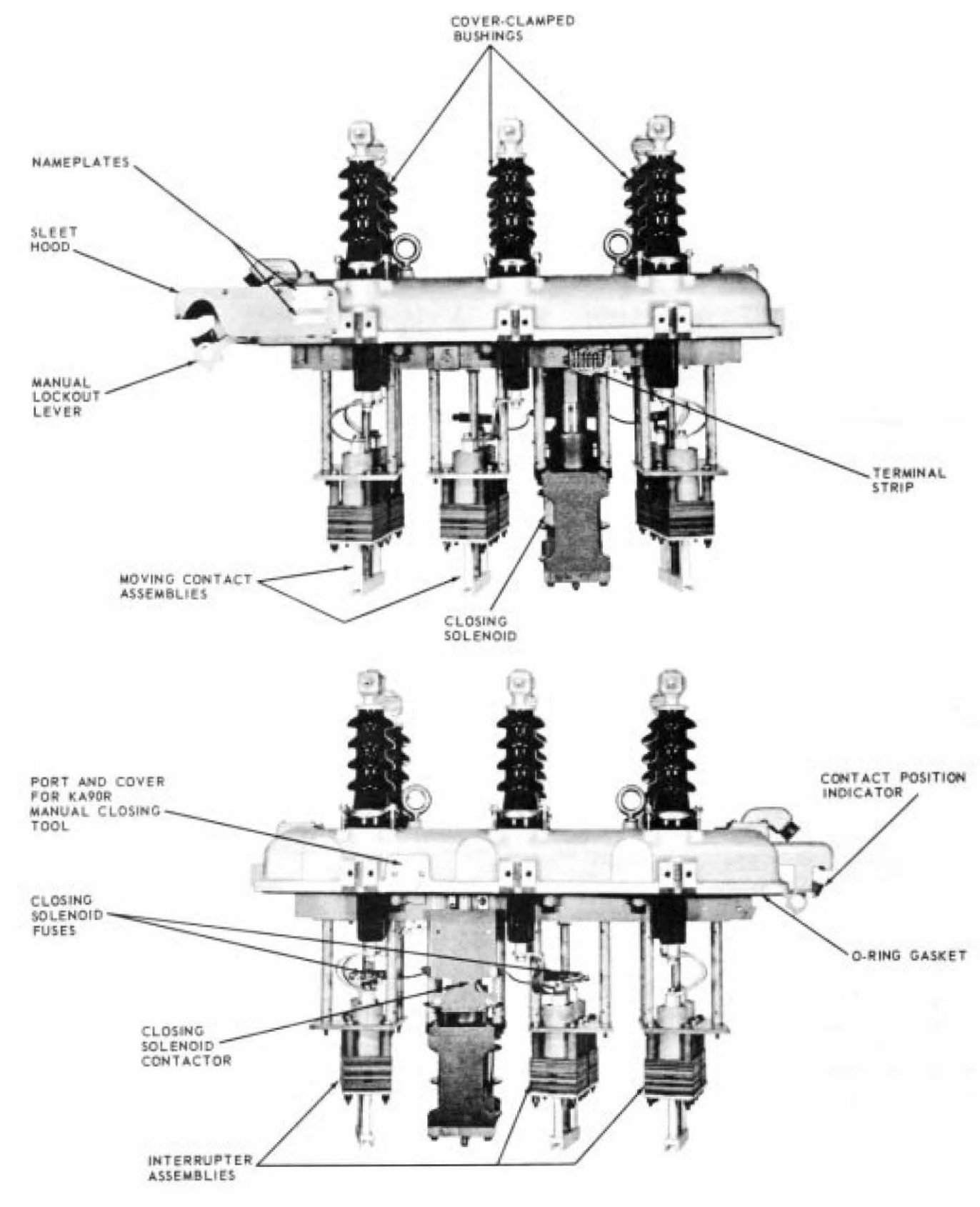

Figure 1
Untanked Type WE Recloser

GENERAL MAINTENCE INFORMATION - CONT'D.

High Dielectric Strength Maintains Oil Effectivness

Although the Type WE can undergo a complete duty cycle without requiring an oil change, more frequent oil changes will be required if the majority of fault currents are near the maximum interrupting rating. Oil that has become contaminated with carbon and sludge, or has a dielectric strength of 18 kv or lower, should be replaced. Use only oil that meets the requirements tabulated below for L-M switchgear. Refer to "ASTM Methods of Testing Electrical Insulating oil," Publication D117. This publication is available from the American Society for Testing Materials, 1916 Race Street, Philadelphia, Pennsylvania.

CHARACTERISTICS OF OIL FOR L-M SWITCHGEAR

Color: nearly colorless	
ASTM colorimeter	1.0 max.
Union colorimeter	2.0 max.
Reaction	neutral
Neutralization number	0.03 mg KOH/g max.
Free sulphur	none
Corrosive compounds	3 max.
Steam emulsion number	25 seconds max.
Flash point	145°C min. (293° F)
Fire point	160°C min. (320° F)
Pour point	(-45.6°C max.) (-50° F)
Viscosity:	
at 37.8°C (100°F)	
Saybolt Universal	62 sec. max.
at 0°c (32°F)	
Sayholt Universal	320 sec. max.
Specific gravity:	
at 20.0°C (68.0°F) .	0.895/cc max.
Co-efficient of expansion:	
at o°c (32°F)	0.000725
at 100° C (212° F)	0.000755
Interfaciai tension	40 dynes/cm min.
Dielectric constant	2.2
Dielectric strength	26,000 volts min.
Weight per gallon	7.5 lb.
Water content (Fischer test)	40 parts/million max.

Servicing Locations Vary with Amount of Maintenance

Routine inspection, minor maintenance, most adjustments, and replacement of oil can be performed on a recloser without removing it from the mounting frame. Repairs or major maintenance work should be performed in the shop.

PERIODIC FIELD INSPECTION AND MAINTENANCE

Each periodic check should include at least the following steps:

1. BYPASS, TRIP, AND DE-ENERGIZE THE RECLOSER
Disconnect the control cable from the recloser.

2. INSPECT EXTERNAL COMPONENTS
Check for broken bushings, paint scratches, or other mechanical damage.

3. LOWER THE TANK TO EXPOSE INTERNAL COMPONENTS
Attach sheaves of the tank-hoisting mechanism to recloser tank, and take up slack. Then remove the ten bolts to release the tank from the head casting.

CAUTION: Be sure the recloser is tripped before lowering the tank, so the recloser will not be tripped accidentally while the mechanism is out of oil.

4. INSPECT MOVING CONTACTS
Arcing tips of the moving contacts can experience considerable erosion before replacement is necessary. The contacts should be replaced before their effectiveness is impaired by erosion of the load current contact surfaces.

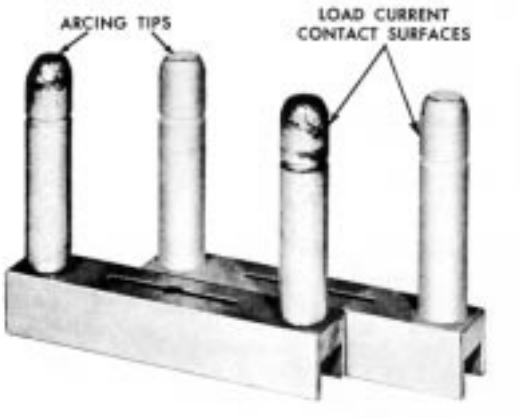

Figure 2
Left: moving contact assembly after one full duty cycle; right; contact assembly new.

Figure 2 shows a set of moving contacts after they have experienced severe interrupting duty, and a new set for comparison. The used contacts shown have reached the condition where they should be replaced.

If moving contacts appear to have further useful life, inspection of the arc interrupter chamber and stationary contacts can be omitted. These components are designed to last at least the life of the moving contacts.

5. INSPECT STATIONARY CONTACTS

If moving contacts of any phase or phases are in questionable condition, the corresponding stationary contacts should be inspected. Refer to page 7 or 9 for instructions on removal and reassembly of the fiber plates that form the arc interruption chambers. Removal of these plates is necessary for inspection of the stationary contacts.

Figure 3 shows a stationary contact assembly after one duty cycle and a new assembly for comparison. Note that erosion of the load current contact surfaces has started. The six contact segments or the entire assembly should be replaced.

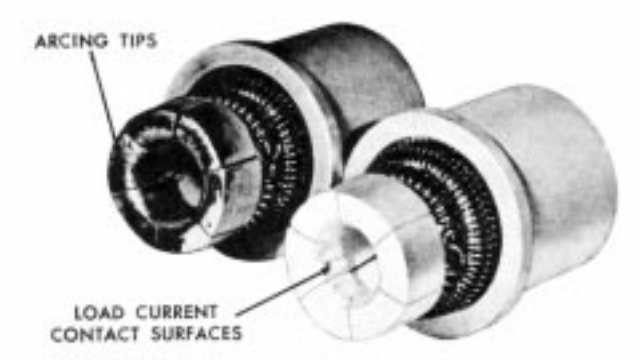

Figure 3
Left: Stationary contact assembly after one full duty cycle;
right: new contact assembly.
Reclosers below serial No.1001

6. INSPECT ARC INTERRUPTER CHAMBERS (Reclosers Below Serial No. 1001)

When stationary contacts are inspected, check fiber plates of the arc interrupter chambers. These plates are stacked as shown in figure 4.

The twelve 1/8-inch plates have a slot cut on one end to form exhaust ports. Each arc interruption causes some erosion of these slots. Plates should be replaced when the arc interrupter chamber wall is reduced to 3/4-inch, measured along the shortest side of the exhaust port slot, as illustrated in figure 5.

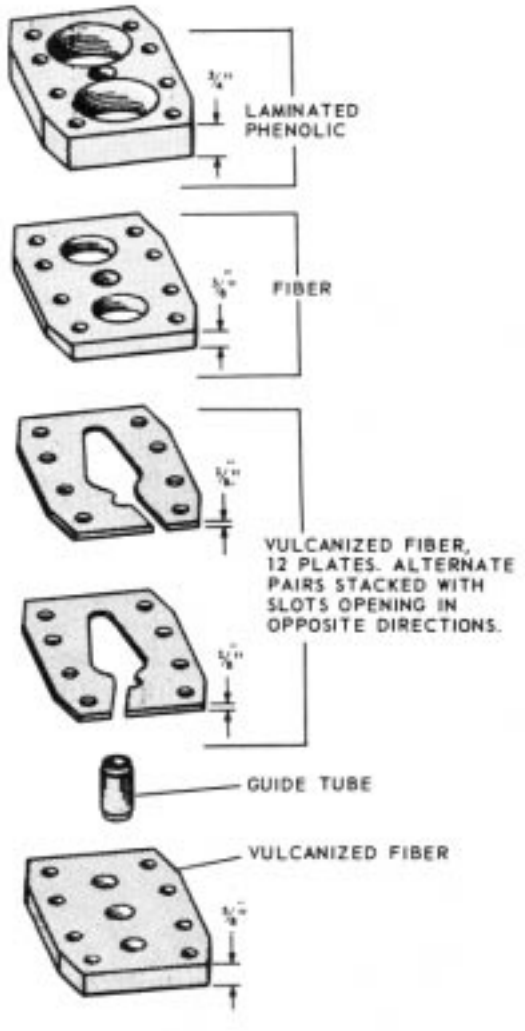

Figure 4
Fiber parts of arc interrupter assembly.
Reclosers below serial No. 1001

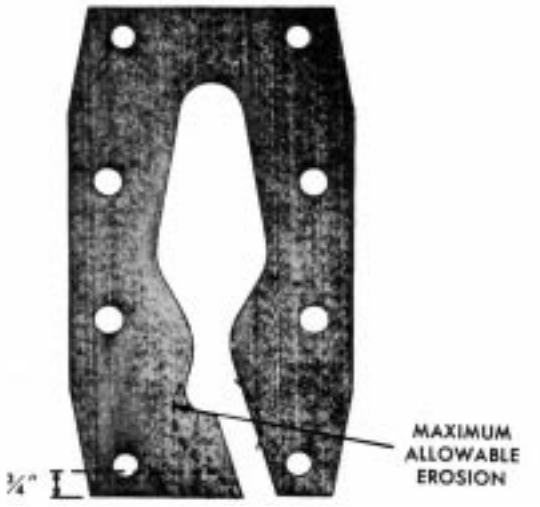

Figure 5
Vulcanized fiber plate from interrupter assembly.
Reclosers below serial No. 1001

GENERAL MAINTENANCE INFORMATION- CONT'D.

Erosion of the slots in the fiber plates results in longer arcs being drawn. Greater arc energy must then be dissipated during each interruption. Test results indicate the Type WE can successfully interrupt rated current when the arc chamber wall is reduced to the above 3/4-inch dimension. Therefore, if fault currents are well below maximum rated currents, some further erosion can be tolerated. If any plates require replacement the entire stock should be replaced with a new style assembly, item number 12, page 22.

(Reclosers Above Serial No. 1000)

The insignificant cost of the fiber plates making up the arc interrupter chambers on all reclosers above serial no. 1000 permits complete replacement whenever the stationary contacts are replaced. A visual comparison of bottom and top plates will indicate necessity for replacement. The top plates closest to the stationary contacts and nearest to the most arcing will show enough erosion to provide a decision for replacement.

7. CLEAN ALL INTERNAL COMPONENTS

Remove all carbon traces by wiping with a clean, lint-free cloth. Pay particular attention to all insulating members. Flush the mechanism with clean, dry transformer oil.

CAUTION: Never use volatile solutions, detergents, or water-soluble cleaners.

8. DRAIN OLD OIL

Remove the /-inch pipe plug at the bottom of the tank, or open the tank valve if one has been installed. Rinse the tank with clean oil, and wipe out all carbon traces with a clean lint-free cloth.

9. INSPECT TANK LINERS

Any soft or spongy areas in the liners indicate moisture has been absorbed. These areas are most likely to occur near the bottom of the tank. When replacing liners, be sure the new liner installed in each section is the same size as the original.

If interrupting duty is severe, the tank liners may be eroded near the exhaust ports of the arc interrupting structures. Replace any liners that show appreciable erosion.

NOTE: For reclosers below Serial No. 1001 the replacement liners come in a kit as part number KA829W. For reclosers above serial number 1000, replacement liners come in a kit, as part number KA867R.

10. CHECK CIRCUIT COMPONENTS ATTACHED TO THE RECLOSER COVER, FRAME, AND OPERATING MECHANISM

These components are identified in figures 23, 30 and 33. Be sure all wiring to the terminal strip is secure at each terminal. The rotary solenoid and trip solenoid should be firmly attached to the recloser frame.

Check mercury switches attached to the counter shaft and main shaft. They should be securely held in place by the nylon mounting straps. Check the microswitch mounted above the main shaft. It should be firmly held in place by the mounting bracket. Check bushing current transformers. See that wiring is in order.

11. FILL TANK WITH OIL

Use only new transformer oil with dielectric strength of at least 26 kv, as measured across a standard 0.1-inch gap in accordance with methods presented in ASTM Publication D117. The oil level should be 2-1/4 inches from the top of the tank with the mechanism removed. The level can be double checked with the oil level gauge after the mechanisms and head casting have been fastened in place. The capacity of the tank is approximately 38 gallons.

12. REPLACE TANK

Clean the O-ring head gasket and the tank gasket seat. Move the control lever to the closed position to avoid any possible binding while raising the tank. Raise the tank and secure it to the head casting with the ten head bolts.

13. CHECK LOCKOUT LEVER AND CONTACT POSITION INDICATOR

Correct operation of these components can be observed by manually operating the recloser.

14. MANUAL OPERATION

Remove the closing tool port cover and gasket and insert a KA90R closing tool. Manual operation can now be achieved by closing with the KA90R tool and tripping the recloser with the lockout lever. See figure 6.

CAUTION: Never use the KA90R tool on an energized recloser.

If a Type WE is to be tripped out of oil, use the closing tool to open the contacts. While one person turns the tool clockwise against the stop, another can move the trip lever, shown in figure 7, to the right. Now let the tool slowly rotate counterclockwise to open the contacts. Replace port cover and gasket when manual operation is completed.

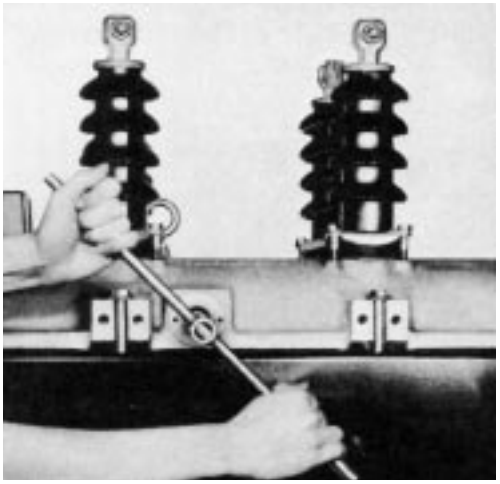

Figure 6
Rotating the KA90R tool clockwise to manually close the recloser.

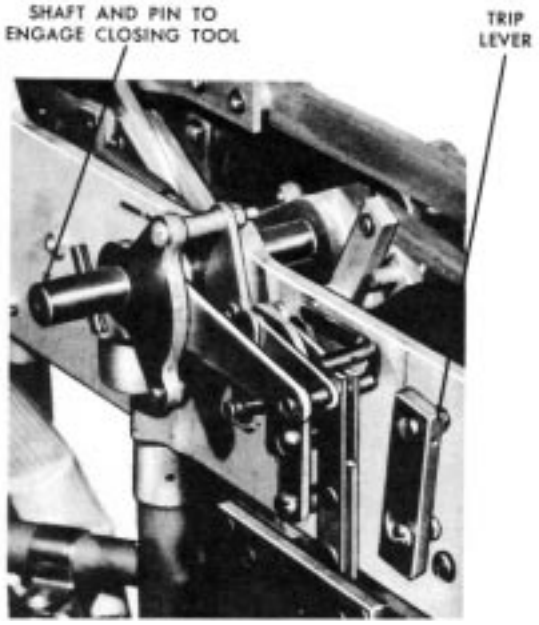

Figure 7
Move trip lever to the right to release recloser when opening with closing tool.

15. CONNECT CONTROL CABLE TO RECEPTACLE ON RECLOSER HEAD CASTING

Place recloser in service according to procedures outlined in the Type WE Installation Manual, bulletin 281-25SA-1.

NOTE: Electronic control can be checked out with or without recloser in service. Periodic operational checks can be made according to the control service manual.

SHOP MAINTENANCE

When shop maintenance or repairs are to be performed, remove the ten bolts that secure the head casting to the tank. With suitable hoist, raise the recloser mechanism out of the oil and allow it to drain. The recloser can be left suspended by the hoist, inverted and placed on a workbench, or the mechanism frame ends can be supported by a special rack.

ARC INTERRUPTING ASSEMBLY (Reclosers below Serial No. 1001)

After the Type WE recloser has operated through a complete duty cycle, the arc interrupter assembly should be completely dismantled and any worn parts replaced.

1. Using a 1/2-inch thin-wall socket, remove selflocking hexnut that secures the contact yoke to the lift rod, figure 8. Gently tap contact arm to remove contacts from the lift rod. Pin in the rod must be aligned with a slot in the contact yoke.

2. Disconnect the heavy braided lead from the top of each stationary contact assembly.

3. Remove hexnuts, flat washers, and lock washers from the bottom of interrupter assembly.

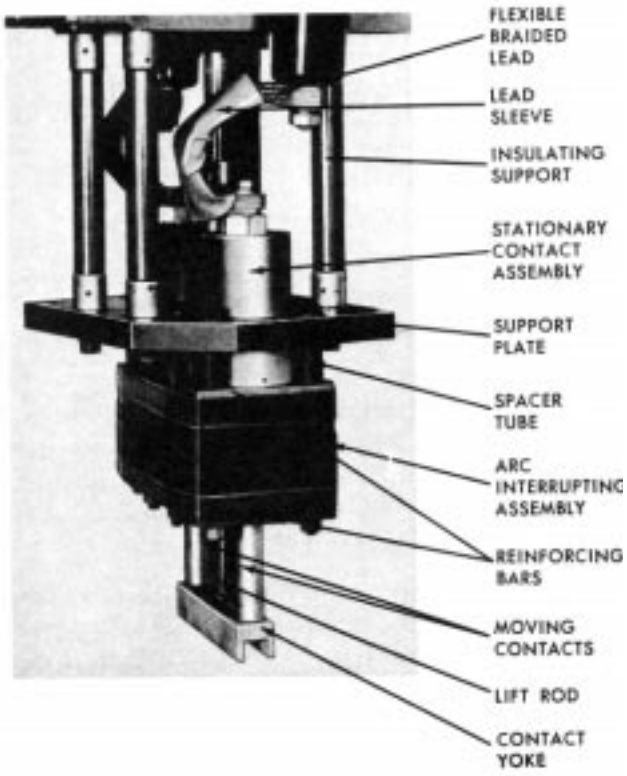

Figure 8
Exhaust side of interrupter housing. Note position of reinforcing plates. (Reclosers below serial no. 1001)

SHOP MAINTENANCE (CONT'D.)

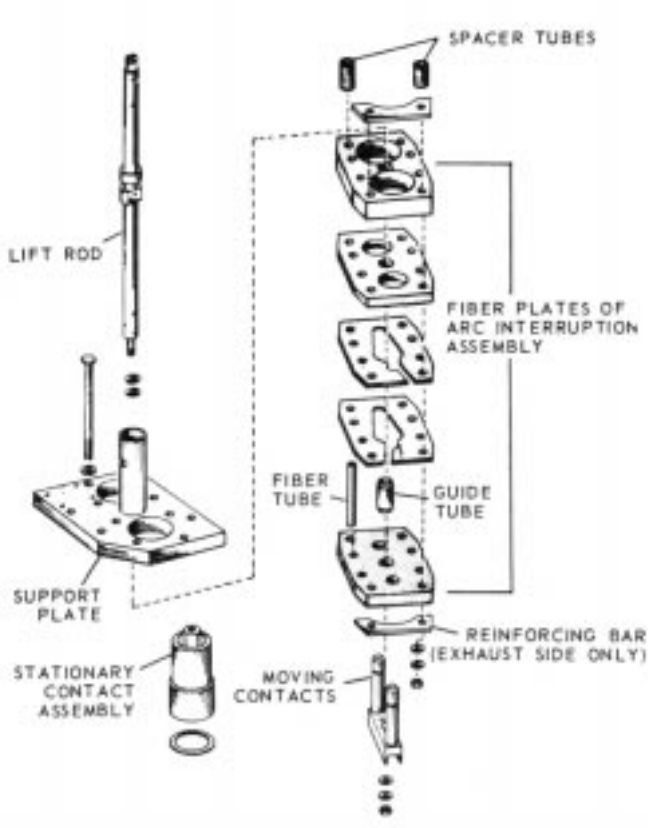

Figure 9
Components of arc interrupter assembly.
(Reclosers below serial no. 1001)

4. Slide the arc interrupter assembly downward. Figure 9 shows the individual parts in the order of removal.

5. Examine the stationary contact segments to determine if arc erosion has spread to the load contact surfaces. If so, replace the entire stationary contact assembly or, where erosion is less severe, the contact segments only.

6. Clamp the large end of the fiber tube in a smooth-jaw vise. Apply sufficient pressure to deform the tube slightly to create a hold on the contact receptacle. With an adjustable wrench, turn the large terminal nut counterclockwise to loosen it from the opposite end of the stationary contact assembly.

   Engage a large screwdriver in the slotted contact stud located inside the contact assembly. The large terminal nut can now be removed completely.

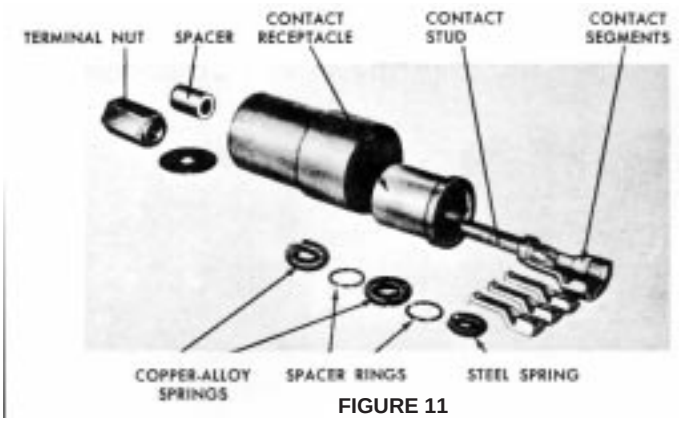

Figure 10
Components of stationary contact assembly.
(Reclosers below serial no. 1001)

   Pull and turn the contact segments to remove them. Figure 10 shows the contact assembly completely dismantled.

7. To reassemble stationary contacts, arrange the six segments so they are hooked to the slotted head of the contact stud. Use a rubber band to hold them in place while installing springs. Slip the steel spring on followed, in order, by a spacer ring, copper-alloy spring, spacer ring, and the second copper-alloy spring.

   Insert segments in the contact receptacle, figure 11, by twisting and pushing. Replace the contact receptacle in the fiber tube. Position the washer on the opposite end and secure the entire assembly with the terminal nut. Use the large screwdriver to hold the contact stud while tightening the large terminal nut.

Figure 11
Assembling stationary contact.
(Reclosers below serial no. 1001)

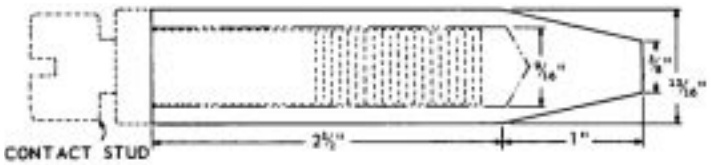

Figure 12
Dimensions of sleeve for installing steel spring on stationary contact assembly on reclosers below serial no. 1001

NOTE: Installation of the steel spring on each stationary contact assembly can be simplified by the use of a tapered wooden sleeve easily made in any woodworking shop. Turn and drill a piece dimensioned as shown in the sketch of figure 12. Slip the sleeve over the end of the heavy screw and roll the steel spring in place.

8. Refer to periodic maintenance, page 5, to determine if the twelve slotted 1/8-inch fiber plates and the laminated 3/8-inch phenolic plates should be replaced.

9. Examine the insulating supports for evidence of tracking or moisture absorption. Replace any defective members as follows:
   Remove the hexnuts, lock washers, and flat washers that secure the phenolic contact support plate to the insulating supports. Loosen defective supports with pliers and remove. Install new members as required and reassemble.

10. If the fiber plates are not to be replaced, refer to figure 9, and reassemble the interrupter in the following order:
    a. Position stationary contact assemblies on top plates. Be sure to include the gasket between these parts. Note that stationary contact tubes are identical. Slide them into position on the eight bolts.

    b. Install slotted fiber plates in pairs to form six exhaust ports in each interrupter assembly. Exhaust ports open to the load side on the end phases and to the source side on the center phase.

    c. Slip the fiber tubes over the four center bolts and push up through the slotted fiber plates.

    d. Match the guide bushing with the center hole of the bottom plate and position the plate. Replace the flat washers, lock washers, and hexnuts on the mounting bolts.
    Be *sure reinforcing bars are placed on the exhaust end.* Then install the moving contacts on the plunger shaft.

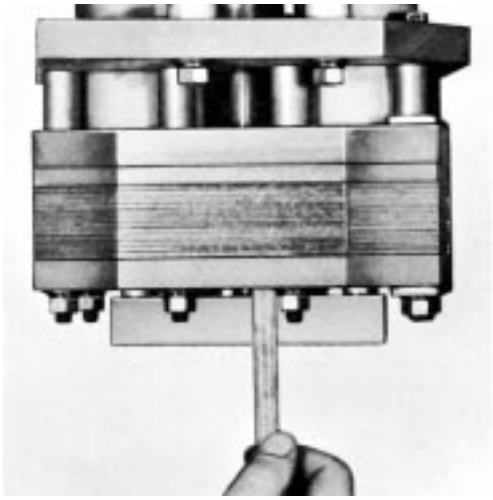

Figure 13
Checking for correct moving contact clearance between contact arm and fiber plate.
(Reclosers below serial No. 1001)

e. Check moving contact clearance as shown in figure 13, measuring from the top of the contact yoke to the bottom of the interrupter assembly. This space should be no less than 1/64, and no greater than 5/64" when the KA90R closing tool is turned clockwise against the stop.

If the space should be adjusted, add or subtract one or more washers above the roll pin in the plunger shaft to obtain the correct measurement. Any washers not placed above the roll pin should be retained between the contact yoke and the elastic stop nut.

If the fiber plates are to be replaced, the new style self-blast interrupter repair kit (item 12, page 22) should be used. The assembly procedure is the same as for the old style, except that the guide bushing and the insulating tubes for the four middle holes are not used.

ARC INTERRUPTER ASSEMBLY (Units above Serial No. 1000)

After the W recloser has operated through a complete duty cycle; the arc interrupter assembly should be completely dismantled and any worn parts replaced.

1. Using a 1/2-inch thin wall socket, remove the vibration-proof hex nut that secures the contact yoke to the lift rod. Gently tap contact arm to remove contacts from the lift rod.

2. Remove the terminal bolt from the top of each stationary contact assembly.

3. Remove hex nuts, flat washers, and lock washers from bottom of interrupter assembly.

SHOP MAINTENANCE (CONT'D.)

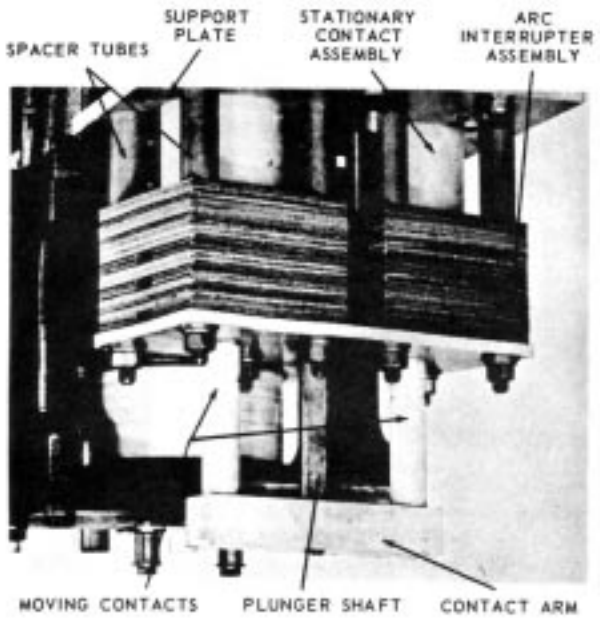

Figure 14
Arc interrupting assembly.
Reclosers above serial no. 1000

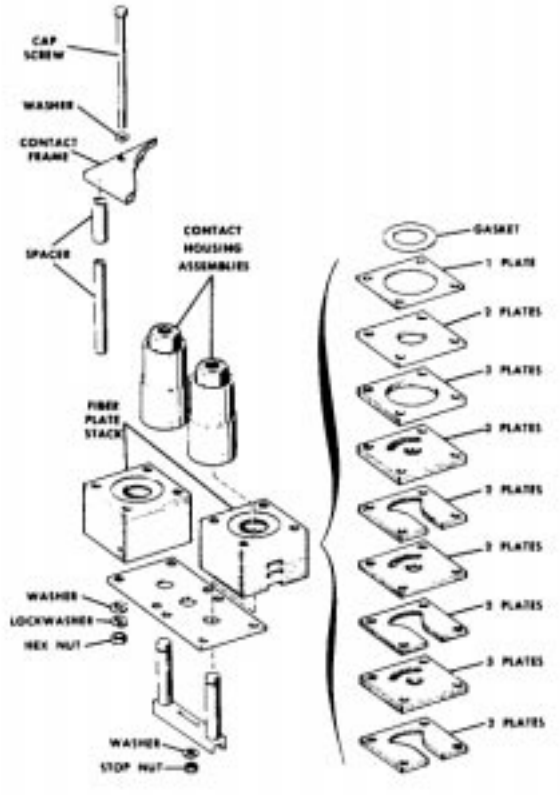

Figure 15
Components of arc interrupter assembly.
reclosers above serial no 1000

4. Slide the arc interrupter assembly downward. Figure 15 shows the individual parts in the order of removal.

5. Examine the stationary contact segments to determine if arc erosion has spread to the load contact surfaces. If so, the contact segments only, or the entire stationary contact assembly should be replaced.

6. Insert a large screwdriver through the stationary contacts to engage the fillister screw slot. With a box wrench, loosen and remove the contact nut while the special screwdriver is held securely in a vise. Remove contact arms, contact cup, and retaining washer, leaving the retaining ring which rests in a slot on the inside of the tube. Figure 16 shows a dismantled stationary contact assembly.

7. To reassemble the stationary contacts slip the contact retainer onto the fillister head cap screw and arrange the six contact segments around the screw and retainer. Each of the six teeth on the retainer should fit into a hole on a contact segment. Place the garter spring, contact springs, and spring spacers over the small end of the assembly in the following order: garter spring, spring spacer, contact spring, spring spacer, and contact spring. Insert this assembly into the contact cup by twisting in clockwise. Then push the cup and contacts into the large end of the tube. Insert the retaining washer and contact nut from the opposite end. Use the large screwdriver to hold the fillister head cap screw while the contact nut is tightened.

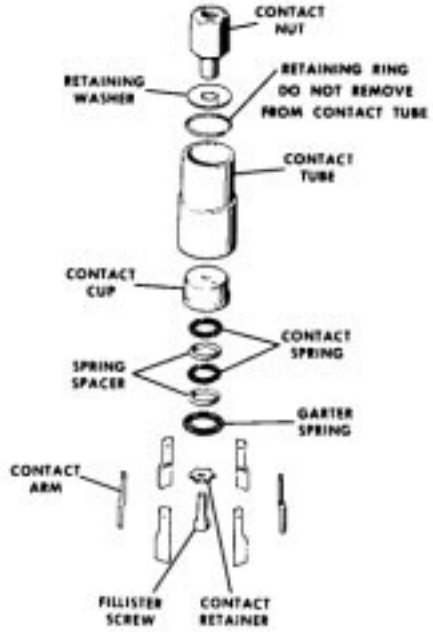

Figure 16
Stationary contact assembly components
Reclosers above serial no. 1000

8. Replace the fiber plates in the arc interruption assembly if necessary. Refer to periodic maintenance, page 6, for the method of determining when these plates should be replaced.

9. Examine the insulating support stringers for evidence of tracking or moisture absorption. Failure of these members is rare, but if any show tracking, replace as follows:

   a. Disconnect the lead attached to the series trip solenoid coil tube.

   b. Remove the hex nuts, lock washers, and flat washers that secure the phenolic contact support plate to the stringers.

      NOTE: When this plate is lowered, the series trip solenoid plunger will slide out.

   c. Loosen the stringers with pliers and remove.

   d. Install new members as required and reassemble.

10. Refer to figure 15 and reassemble the interrupter in the following order:
    a. Place the fiber plates in two stacks on top of the bottom plate, in the order shown in figure 15. Make sure that the gasket is included. The exhaust ports open to the outside of the assembly.
    b. Drop the long spacer tubes into the corner holes of the two stacks. The lower end of each spacer tube should be flush with the lower surface of the bottom plate. Place the short spacer tubes over the portions of the long spacer tubes which protrude from the stacks.
    c. Position the stationary contact assemblies on top of the two stacks.
    d. Place the assembly in position on the contact frame and secure it with the eight mounting bolts. Reconnect the leads to the contact nuts.
    e. Install the moving contacts on the lift rod.

    NOTE: No clearance adjustment between moving contact and interrupter necessary for new style interrupters furnished for service.

CLOSING SOLENOID

Little maintenance is required for the closing solenoid. However, if the recloser is to be operated at another voltage, replace the solenoid coil as follows:

1. Disconnect the two coil leads from the closing solenoid contactor, figure 17.

2. Remove four capscrews on the bottom of the solenoid frame and lower the coil and base plate. Lift the coil from the base plate.

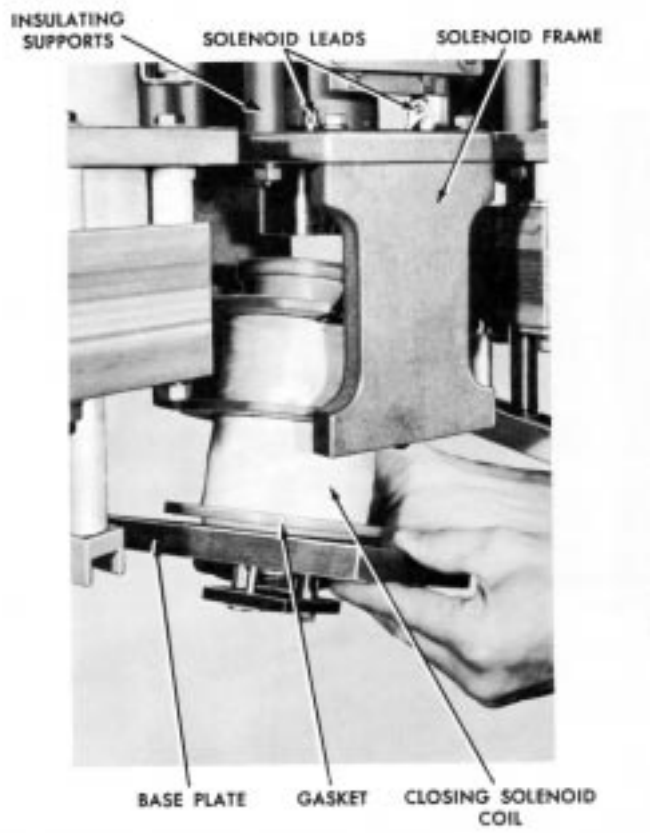

Figure 17
Removing closing solenoid coil.

3. Examine the insulating supports for evidence of tracking or moisture absorption. Replace any defective members as follows:

   Remove the hexnuts, lock washers, and flat washers that secure the solenoid frame to the supports. Then lower the solenoid frame slowly to avoid damaging the closing plunger. Loosen defective supports with pliers and remove. Install new members as required and reassemble.

4. Install the closing solenoid. Be sure to use a new gasket between the coil and solenoid base plate. Also see that solenoid leads clear insulating supports and the solenoid frame by at least 1/2-inch.

CLOSING SOLENOID CONTACTOR

If the double-break contacts of the closing-solenoid contactor require replacement, install an entire new closing-solenoid contactor as follows:

1. Disconnect closing solenoid and fuse leads from contactor.

SHOP MAINTENANCE - CONT'D

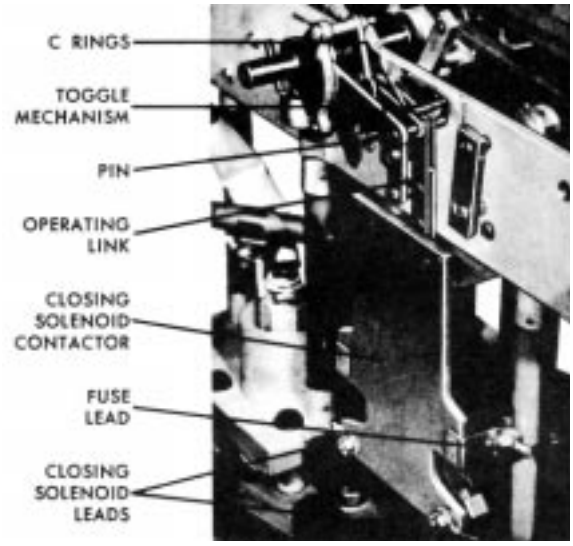

Figure 18
Releasing contact operating rod of closing solenoid contactor from toggle mechanism.

2. Remove three C rings to release pin that connects the operating link to the toggle mechanism, figure 18. Two C rings are between the operating link and toggle mechanism. The third is located on the outer end of the pin.

3. With a long nose pliers, release the springs between the operating link and toggle from the pin. Then push pin through toggle mechanism and operating link.

4. Remove the three hexhead cap screws that secure the contactor to the underside of the recloser frame. Contactor is now free to be removed.

5. Replace the contactor by reversing the above procedure. Use new C rings on toggle-mechanism pin. Be sure closing-solenoid and fuse leads clear insulating supports and grounded parts by at least 1/2-inch.

CAUTION: Fuse leads must be connected to upper terminals of contactor.

CLOSING SOLENOID

To replace a blown closing solenoid fuse, simply disconnect the long lead at the closing-solenoid contactor, the short lead at the fuse end, and loosen the mounting strap. Slide out the fuse and install a new one.

A tag attached to each closing solenoid coil shows the color band coding and catalog number of the correct fuse to protect the coil. Table I also shows this information. Be sure fuse leads clear any grounded parts and insulating supports by 1/2 inch.

TABLE 1

Closing Solenoid Phase-to-Phase Voltage, kv	Fuse Catalog Number*	Color Band	TCC Number (See figure 19)
2.4 and 3.3	**KA259R-4**	Two Red	6
4.16 to 4.8 and 6.0	**KA259R-1**	Black	5
7.2 to 8.32 and 11.0	**KA259R-2**	Yellow	3
12.0 to 14.4	**KA259R-3**	Red	2

*Two fuses are required to protect the distribution system from closing coil failure.

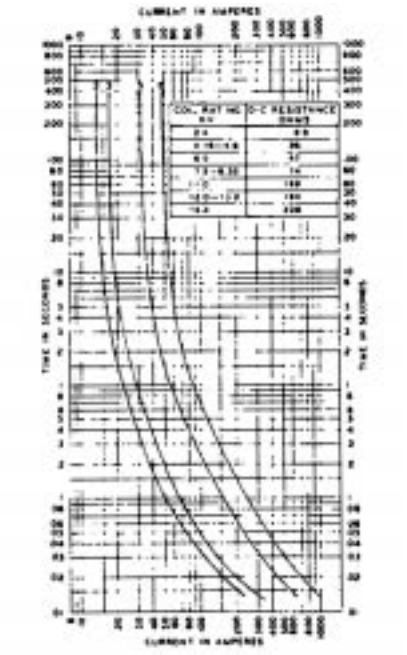

Figure 19
Fuse time-current characteristics for protection of closing solenoid.

BUSHINGS

Maintenance of bushings is generally limited to an occasional cleaning. However, if a bushing should become cracked or broken, replace it as follows:

1. Remove hexnut, lock washer, and flat washers on the lower end of the bushing to release the four flexible straps.

2. Remove the three hexhead cap screws that secure the bushing clamps to the head casting. Lift the bushing assembly up through the head casting.

3. An aluminum clamping ring cushions the pressure between the bushing and bushing clamps. If it is in good condition, the ring can be reused. Twist the ring and slip it from the bushing.

4. Now the bushing assembly can be replaced completely or new porcelain only may be installed. If

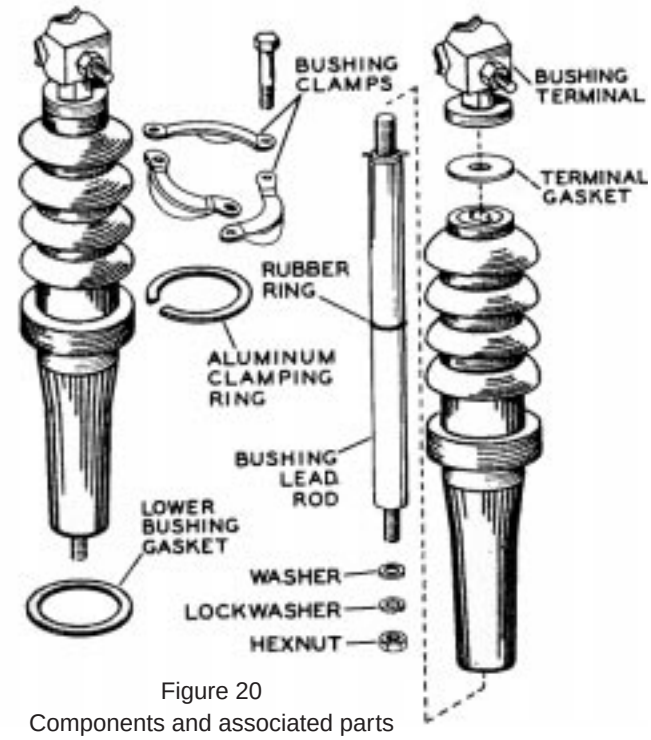

Figure 20
Components and associated parts of bushing assemblies.

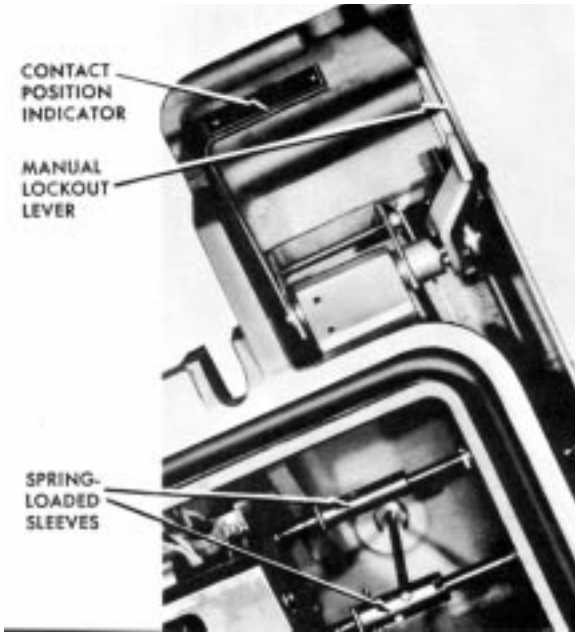

Figure 21
Spring-loaded sleeves of lockout lever and contact position indicator in engaged positions.

new porcelain is to be used, unscrew the bushing terminal and draw the bushing lead rod from the lower end of the porcelain. Insert the rod in the new porcelain and replace the bushing terminal. Be sure to use a new terminal gasket, figure 20.

5. Replace the bushing assembly, using a new gasket between the bushing and the head casting. When securing the bushing clamps, be sure to tighten the three bolts evenly a little at a time.

CAUTION: When reconnecting bushings position flexible leads at least 1/2 inch from any vertical insulating support, grounded part, or contact plunger rod.

REMOVAL OF HEAD CASTING

Access to components located in or on the main frame such as the operating mechanism, mercury switches, trip solenoid, rotary solenoid, and internal wiring, is achieved by removing the head casting. Proceed as follows:

1. Disconnect all bushing leads at the lower end of the bushings.

2. Disengage the lockout lever and the contact position indicator by pushing the spring-loaded couplers inward. Refer to figure 21. Turn the couplers to lock them in the disengaged position.

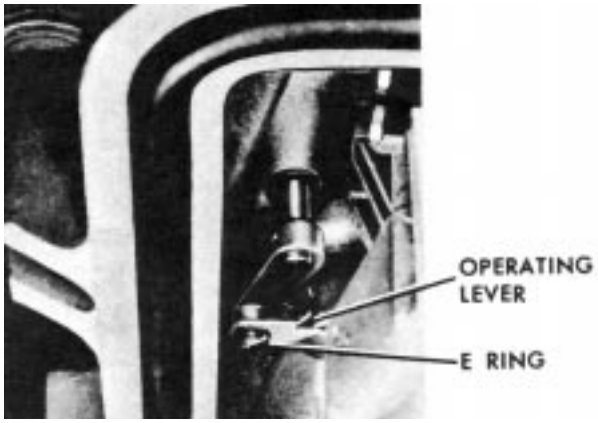

Figure 22
Auxiliary awitch disconnection from operating lever before removal of head casting from operating mechanism.

3. If an auxiliary switch accessory is mounted on the recloser head casting, remove the E ring and washer, figure 22, to allow disconnection of the operating lever.

4. Remove the two screws that secure the 0.2-MFD capacitor to the load side of the recloser frame.

SHOP MAINTENANCE - CONT'D

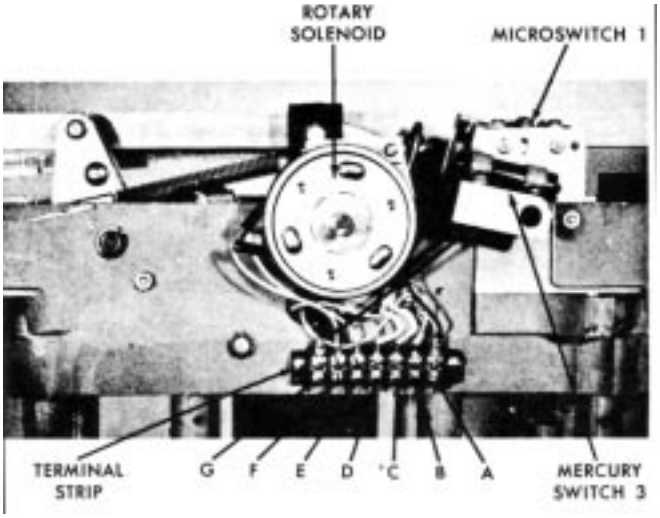

Figure 23
Terminal strip attached to recloser frame.

5. Disconnect the seven leads connected to the lower terminal strip of the terminal block attached to the recloser frame, figure 23. Be sure to label these seven leads corresponding to the terminals from which they are disconnected. Terminals are lettered A through G. *right to left.*

   Remove the screw that secures the nylon leadstrap to the frame above the terminal block.

6. Remove the six 1/2" x 4-1/2" hexsocket head bolts that secure the frame to the head casting. Be sure the recloser mechanism is supported from below before these bolts are removed. Six tubular spacers and lock washers will be released when the bolts are removed and the head is lifted from the recloser-mechanism frame. Figure 24 shows head casting and associated components removed from the mechanism frame.

7. To reassemble, carefully lower head casting in place with the six tubular spacers placed on the lugs. Start the six 1/2" bolts and tighten evenly to avoid any binding of the mechanism.

8. Engage the contact indicator and lockout lever. Reconnect the operating lever of the auxiliary switch if used.

9. Attach 0.2-MFD capacitor to the recloser frame. Reconnect bushing leads. Be sure bushing leads are positioned as described in the cautionary note under step 5 page 13.

10. Connect wiring from bushing CT's and cable receptacle to respective terminals on the terminal block. Attach nylon lead-strap to recloser frame.

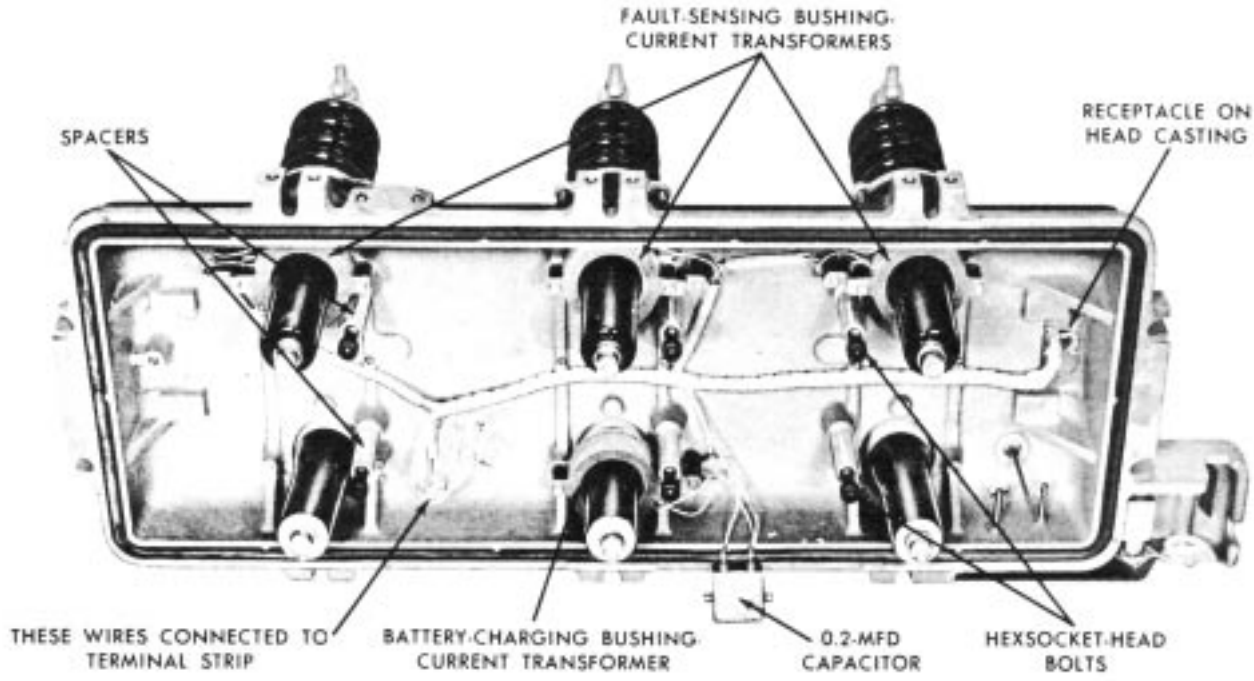

Figure 24
Head casting detached from operating mechanism. Hexsocket-head bolts have been attached to head casting for illustrative purposes.

MECHANISM

The head mechanism performs the actual opening and closing operations in response to signals from the electronic control. Contact opening is initiated by a trip coil. Contact closing is performed by the closing coil, mounted below the mechanism. The basic lever arrangement in the mechanism is shown here.

With the contacts closed, figure 25, the opening springs are fully extended. The trip coil push rod rests up against the toggle latch and when the trip coil is energized, the toggle opens, figure 26. The contact-and-toggle-support assembly and the contact-and-trip-arm assembly rotate on their shafts and begin to push the contacts open. As the opening springs rotate the contact-and-trip-arm assembly past this point, figure 27, the trip arm moves the reset trip lever, which releases the reset lever. The reset lever is rotated by a spring and snaps the toggle closed. This motion of the reset lever also pulls the plunger out of the closing coil. At this point the contacts are completely open.

The closing coil is energized by a signal to the rotary solenoid on the side of the mechanism. The solenoid closes the closing solenoid contactor, which energizes the coil. The plunger is drawn into the coil and the reset lever is pulled back, figure 28, to its original position, at the same time closing the contacts. The mechanism is then ready for another cycle.

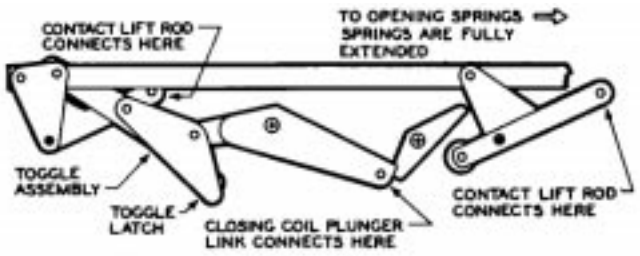

Figure 25
Contacts closed.

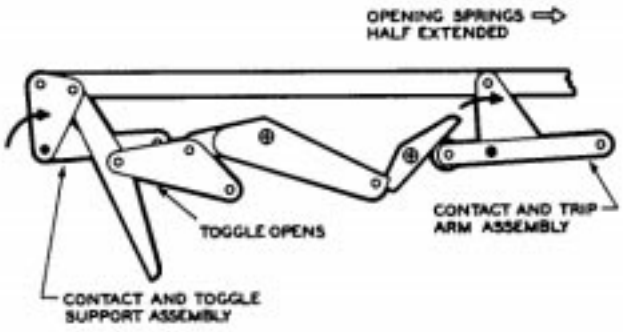

Figure 26
Contacts open halfway.

RATING CHANGES

Type WE reclosers' continuous current rating and minimum-trip values can be changed in the field as described in the control installation manual. Closing solenoid coils are available for eight voltage ranges from 2.4 to 14.4 kv.

Two d-c coils rated at 125- and 250-volts dc also are available for use on the Type WE. When the closing solenoid coil is changed, as described on page 11, the protective fuses may also require replacement. Two fuses are shipped with each replacement coil. Fuse and coil data are given on page 12.

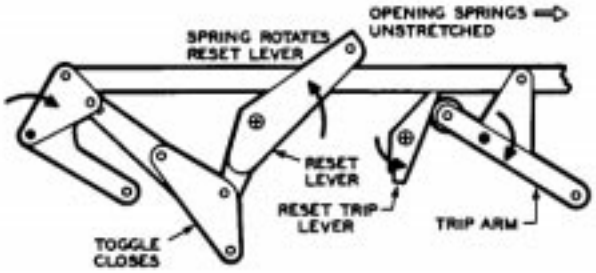

Figure 27
Contacts fully open.

ADJUSTMENTS

Refer to the control installation manual bulletin 281-27SA-1, for information about operations to lockout, reclosing time, phase-trip sequence, minimum-trip values, resetting time, ground-trip sequence, phase-trip timing and ground-trip timing.

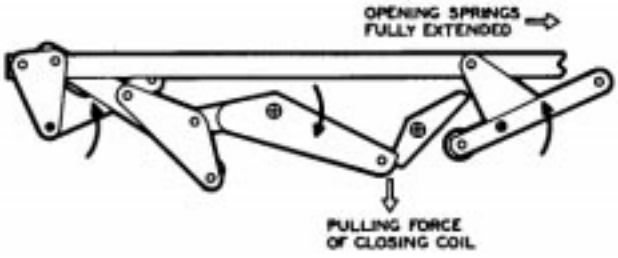

Figure 28
Contacts reclosed.

ADJUSTMENTS - CONT'D

CONTROL LEVER OVERTRAVEL ADJUSTMENT

Check for proper adjustment of the control lever by first removing the sleet hood cover to expose the control lever. From the OPEN position, slowly push the control lever toward the CLOSED position. As the lever is pushed up, latching of the recloser will be felt. At this point dimension a of figure 29 should be 1/4 inch.

If the control lever is not adjusted properly, open the C ring and remove it with diagonal cutters. Then slide the control lever from the shaft. Rotate the control lever clockwise to reduce dimension a or counterclockwise to increase dimension a. Reassemble by reversing the procedure when the correct clearance has been set.

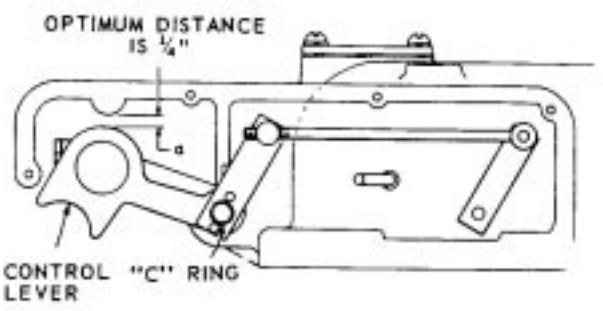

Figure 29
Overtravel adjustment of manual lockout lever.

OPERATIONAL CHECKS

Circuit components attached to the recloser cover, frame and operating mechanism require no maintenance and should provide trouble-free operation. However, if the Type WE recloser fails to operate properly, perform these steps:

1. check out the control cable for continuity between ends,

2. test the circuit components associated with the recloser mechanism as described below, and

3. check the electronic control as described in the electronic control Service Manual, Bulletin No. 281-27SB-1.

The Type WE should be checked out in this order. An ohmmeter-voltmeter such as the Triplet Model M30, which was used as a reference for the following tests, is the only equipment necessary for steps 1 and 2.

CONTROL CABLE

Remove the recloser from service as described on page 4 if not already disconnected. Then detach the control cable from the receptacles on the recloser cover and underside of the electronic control housing. With the ohmmeter, check for continuity between cable pins and pin sockets. Pins and pin sockets are identified on each cable end.

A zero reading indicates continuity; an infinite reading indicates an open circuit. If an open circuit is discovered, the cable can be reinstalled after the open-circuited lead is repaired or replaced. Continuity between unlike pins or sockets indicates a short circuit. Pins and sockets of the control cable designated N and P are not used.

CIRCUIT COMPONENTS

Refer to figures 23, 30, 31, 32, 33 and 36 for identification of microswitch 1, mercury switches 2 and 3, rotary solenoid, trip solenoid, bushing current transformers, terminal strip, and the configuration of pinsockets of the control-cable receptacle on the head casting. The components are checked out under the three following conditions:

1. Recloser *contacts open* and manual *control* lever *down*

   a. All measurements are made from the pin-sockets of the control-cable receptacle.

   b. Connect ohmmeter probes to sockets A and B. The ohmmeter should read approximately 9.5 ohms. If not, difficulty may be present in the trip solenoid.

      NOTE: Readings within $\pm$15 percent of suggested readings are sufficient to indicate components are trouble free.

   c. Transfer ohmmeter probes to sockets E and F. Reading of 19 ohms indicates rotary solenoid should be trouble free.

   d. Insert ohmmeter common probe into socket K. Insert the positive probe into sockets G. H. then J. All three readings should be 7 ohms. If not, corresponding sensing current transformer may be faulty. Check bushing CT's for ratio and polarity as described in the test procedure on page 19.

   e. With ohmmeter common probe still inserted in socket K, insert positive probe into socket L. ohmmeter should read 1000 ohms. If a reading of zero ohms is obtained, the 0.2-MFD capacitor may be short circuited. Readings deviating from 1000 ohms outside a 20 percent tolerance indicate damaged resistor or transformer winding.

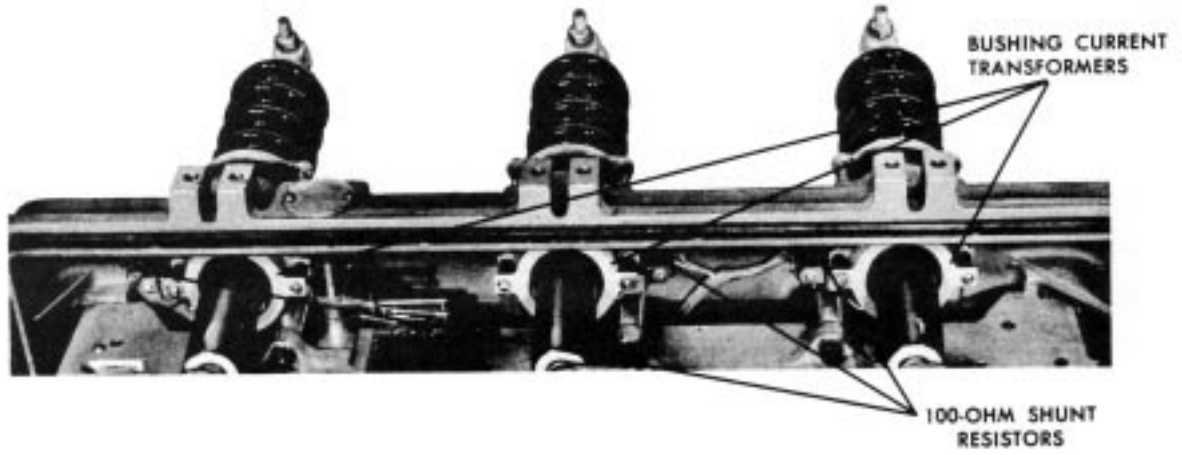

Figure 30

View of fault-sensing bushing-current transformers located on source side of recloser. Battery-charging current transformer is located on center-phase load side, except far these combinations:

1. 100 ampere phase-trip resistors, 2.4 kv or 4.16 kv to 4.8 kv closing solenoids
2. 140 ampere phase-trip resistors, 2.4 kv closing solenoid.

For these combinations the sensing transformers are located an the load side of the recloser while the battery-charging transformer is located on the center-phase source-side bushing.

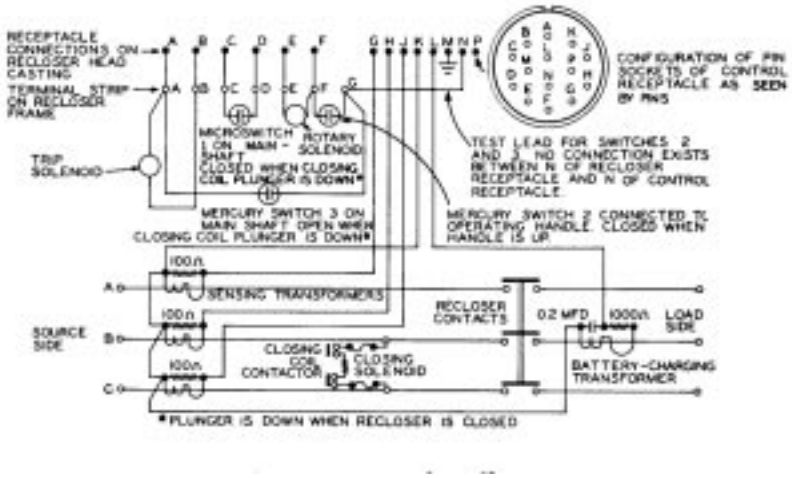

Figure 31

Internal wiring of Type WE recloser. Terminals on recloser terminal strip are lettered right to left, A through G. Terminals on terminal strip in this diagram are lettered left to right, A through G. for explanatory purposes. Pin N of the control-cable receptacle is connected to terminal G of the terminal strip on the recloser frame to facilitate testing of mercury switches 2 and 3.

f. Transfer ohmmeter probes to sockets C and D. Infinite ohms should be read indicating microswitch 1 is open-circuited. If not, the mercury switch is faulty, but should be rechecked before replacing.

NOTE: Mercury switch and microswitch positions for combinations of control-lever and recloser-contact positions are tabulated on page 18.

g. Transfer ohmmeter probes to sockets F and A. The ohmmeter should read infinite ohms. If not, mercury switch 2 may be faulty. Individual checks on mercury switches 2 and 3 can be made by means of pin-sockets N, F, and A.

2. Recloser *contacts open* and manual *control lever up*

a. Repeat step f under condition 1. Microswitch 1 should still be open.

OPERATIONAL CHECKS- CONT'D

b. Transfer ohmmeter leads to sockets F and A. ohmmeter should indicate closed circuit showing that mercury switch 3 has remained closed. Mercury switch 2 should be closed.

c. Remove ohmmeter probes from terminals F and A. Connect positive lead of the battery (or 25-volt station d-c source) to socket F. Momentarily connect the negative lead to socket E. Rotary solenoid should operate producing an easily distinguished sound. Repeat two or three times. Connect ohm meter across source-side B and C phases; see figure 32 for identification of phases. The ohmmeter should show closing coil continuity (effective d-c resistance of coil when rotary solenoid is energized.) Disconnect d-c source.

NOTE: To check for d-c closing-coil continuity, read value across d-c terminals in junction box.

CAUTION: If the control battery is used as the 25-volt d-c test source, the battery should be connected only as long as is necessary for testing purposes. Lengthy connection across the rotary solenoid will create an excessive drain of energy from the battery, although it has no effect on the solenoid itself. If a station d-c source is used, it can remain connected to sockets E and F from step 2c through completion of testing.

3. Recloser *contacts* closed and manual *control* lever up

a. With 25-volt d-c source connected across sockets E and F. close the main recloser contacts with the KA9OR closing tool, as described on page 6. ohmmeter connected across B and C phases should show loss of continuity indicating that closing-solenoid contactor is open.

b. Transfer ohmmeter probes to terminals C and D. Zero ohms indicates that microswitch 1 is operative and closed. Remove KA9OR closing tool and ohmmeter leads from receptacle sockets.

c. Trip recloser by applying 25 volts d-c across socket A (positive) and socket B (negative). If recloser contacts do not trip open, trip solenoid may be inoperative.

CAUTION: Recloser should be tripped in oil to avoid damage to the dashpot in the arc-interrupting mechanisms.

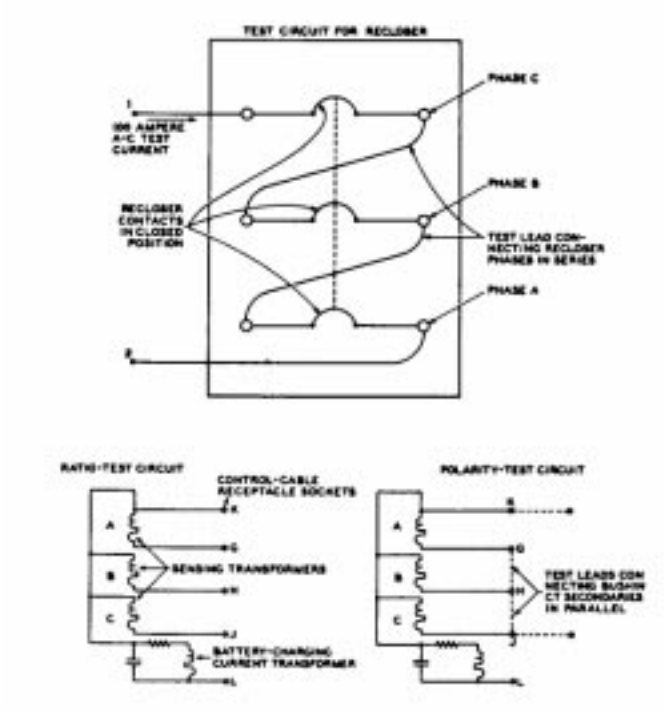

Figure 32
Test circuit for checking bushing current transformers. Ratio and polarity test-circuits shown are the effective circuits that contribute to the testing. Components not having an effect on the current flow are not shown. Dotted lines in the polarity-test circuit are test leads.

TABLE 2

Recloser Contacts	Manual Control Lever	Micro-switch 1	Mercury Switch 2	Mercury Switch 3
OPEN	DOWN	OPEN	OPEN	CLOSED
OPEN	UP	OPEN	CLOSED	CLOSED
CLOSED	UP	CLOSED	CLOSED	OPEN

BUSHING-CURRENT TRANSFORMER TESTS

The sensing transformers and battery-charging transformer can be tested using the circuits shown in figure 32. An a-c ammeter possessing a 0 to 500 milliampere range is required.

Assemble the test circuit as shown in the top drawing of figure 32. Connect the phases in series and close the recloser contacts with the KA90R closing tool as described on page 6. Connect a 1000-ampere a-c test-current supply to points 1 and 2.

CAUTION: Never use the KA90R manual closing tool on an energized recloser.

Ratio Test for Sensing Current Transformers

1. Energize 100-ampere test source.

2. Check current through control-cable receptacle sockets K-G, K-H, and K-J as identified in figure 31. For each sensing bushing CT checked, the milliammeter should indicate 100 milliamperes, + 10 percent. BE SURE TO ALLOW FOR TOLERANCES OF METERING EQUIPMENT. The resistance of certain types of meters is not negligible. It may be necessary to use the 0-100 milliampere scare, with its lower resistance, rather than the 0-100 milliampere scale.

3. A 100-ma reading verifies the 1000:1 ratio of the current transformer. If 100-ma is not achieved, bushing CT can be suspected as faulty; but polarity test should be performed. De-energize test source.

Polarity Test for Sensing Current Transformers

1. Connect sockets G. H. and J of the control-cable receptacle in series with jumper leads as indicated in figure 32. The jumper leads connect the secondaries of the current transformers in parallel so that total output current, measured at points K and J. should be 300 ma.

2. Energize a-c test current. Check for 300-ma reading at sockets K and J. Results can indicate either (a) all three bushing current transformers have the same polarity - 300-ma reading, or (b) one bushing current transformer has polarity opposite remaining two—100-ma reading. Should one transformer possess opposite polarity, be sure to refer to the circuit of figure 31 as a guide during further trouble shooting.

3. De-energize a-c test current and remove jumper wires from receptacle sockets.

Output Test for Battery-charging Current Transformer

1. Energize 100-ampere a-c test current.

2. Measure current at sockets K and L of receptacle. Value should fall between 40 and 60 milliamperes.

3. Readings within this range indicate sufficient current to maintain the control battery at the optimum voltage level.

REPLACEMENT INSTRUCTIONS FOR CIRCUIT COMPONENTS

All circuit components associated with the recloser frame, head casting and operating mechanism except the trip solenoid, rotary solenoid, microswitch 1 and mercury switch 2 can be replaced without detaching the recloser mechanism from the head casting. Instructions for replacing bushing CT's, mercury switch 3, end the O.2-MFD capacitor are given first.

A 100-watt soldering iron will meet all requirements for repair work. When resoldering lead connections, use only resin core solder. M-E will assume no responsibility for components having leads connected by means of acid core solder.

0.2-MFD Capacitor

Label lead connections to the capacitor and proceed as follows:

1. Heat solder joints to disconnect leads.

2. Remove two screws that secure capacitor to recloser frame.

3. Replace by reversing above procedure. Be sure to reconnect leads to proper capacitor terminals.

Battery-Charging Current Transformer

Label lead connections to the current transformer and shunting resistor. Then proceed as follows:

1. With diagonal cutters, clip the leads close to the current transformer.

2. Disconnect the flexible bushing lead.

3. Remove the two screws that secure the current transformer to the head casting. Bushing CT is now free to be removed.

4. Replace current transformer by reversing the above procedure. Be sure to use spacers between the transformer mounting supports. Replacement transformers are equipped with six-inch leads which can be trimmed as required. When splicing connections, be sure the proper leads are connected before soldering. Be sure to wrap all splices with electrical tape and observe soldering precautions recommended above.

Sensing Bushing-Current Transformers

Replacement of phase A, phase B. and phase C current transformers is identical. These transformers are installed as described above under battery-charging transformer instructions.

Mercury Switch 3

Refer to figure 23. Disconnect leads from terminals A and G and proceed as follows:

1. Loosen two screws that secure nylon mounting straps to lever pinned to main reclosing shaft.

2. Slip mercury switch from mounting straps when screws are loosened sufficiently.

3. Be sure to replace mercury switch so that lead wires are furthest from the rotary solenoid. If the end without lead wires is not nearest the rotary solenoid, improper operation of the recloser mechanism will result.

OPERATIONAL CHECKS- CONT'D

Remove Head Casting for Remaining Components

To replace the following components - trip solenoid, microswitch 1, mercury switch 2 and rotary solenoid - the recloser mechanism must be removed from the head casting, as described on page 13.

Mercury Switch 2

Refer to figure 33 and install new switch as follows:

1. Disconnect the leads of the mercury switch from the terminal strip terminals F and G.

2. Remove the four nylon mounting straps that secure the sleeving to the recloser frame.

3. Remove the faulty switch from its mounting straps. With an offset screwdriver, loosen the screws that secure the nylon straps to manual-lockout shaft lever to allow removal of switch 2.

4. Pull the leads through the protective sleeving. Thread the leads of the new mercury switch through the sleeving. Thread both leads at the same time. Leads can be secured to a long wire which can draw the mercury switch leads through the sleeving.

   NOTE Switch leads need only be connected between the proper terminals for correct operation. Reversing leads between switch terminals has no effect on recloser operation.

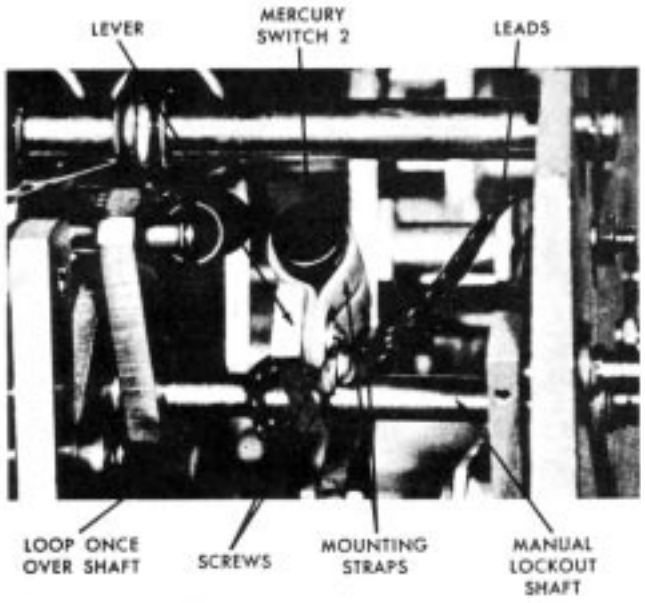

Figure 33
Location of mercury switch 2.

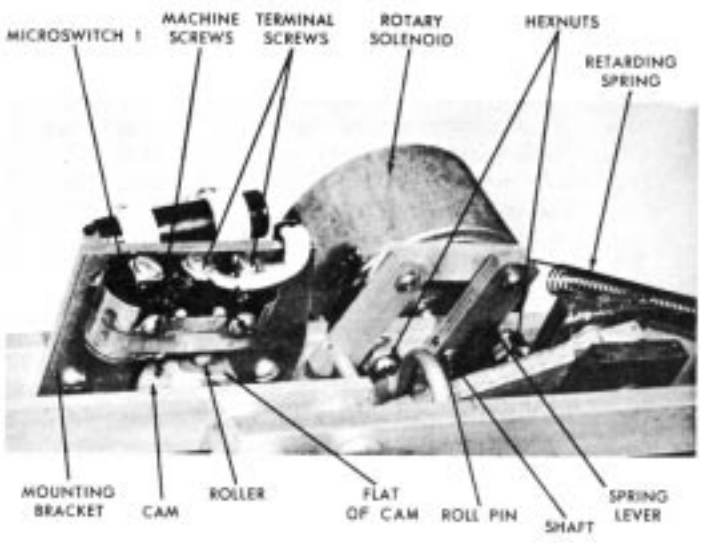

Figure 34
Properly installed microswitch 1.

5. Pass sleeving through mounting straps and tighten to secure sleeving. Connect switch leads to proper terminals. Position switch as shown in figure 33 and secure mounting straps to lever. If switch is positioned opposite to that illustrated in figure 33, the recloser will operate improperly.

Microswitch 1

Refer to figure 34 and proceed as follows:

1. Disconnect the two white leads from the top of the microswitch.

2. Remove two round-head machine screws to release microswitch from mounting bracket. A hexnut and washer will be released from the threaded end of the screw.

3. Attach new microswitch to mounting bracket. Adjust microswitch so that roller lever stop just touches base of switch when roller rides on cam. When roller is off cam, it should just clear flat of cam as shown in figure 34. Tighten machine screws.

4. Reconnect leads to two terminals nearest rotary solenoid as shown.

Rotary Solenoid

Refer to figures 23, 34, and 35 and proceed as follows to replace the rotary solenoid:

1. Drive out the roll pin that secures the spring lever to the rotary-solenoid shaft. Detach retarding spring from cotter pin.

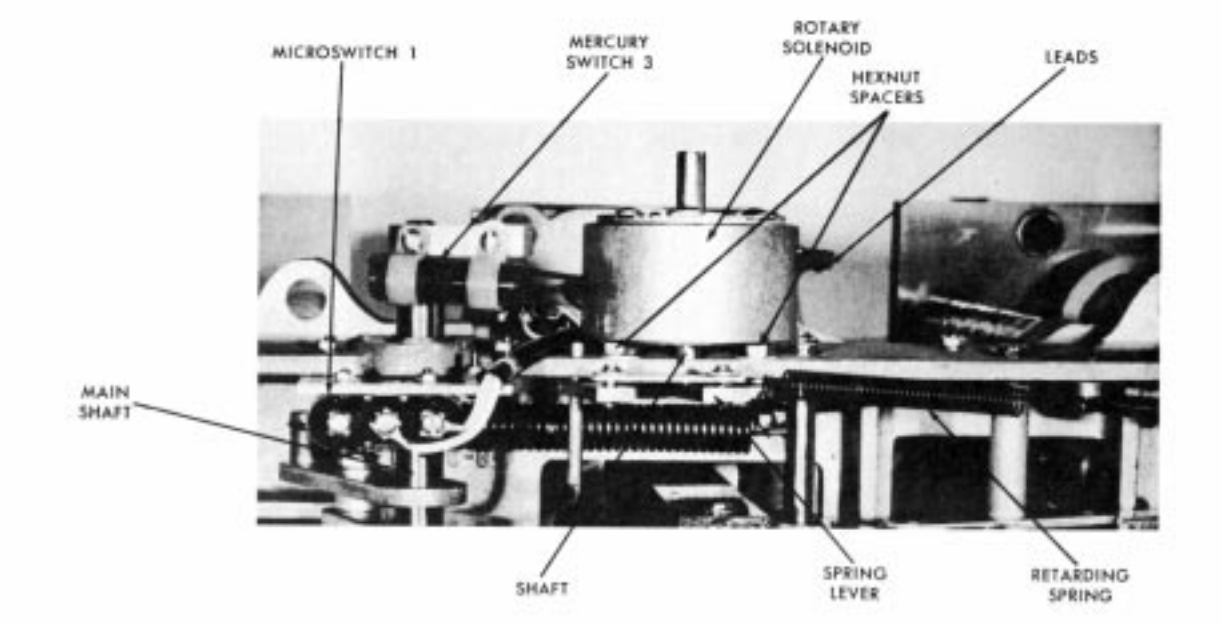

Figure 35
Top view of rotary solenoid and associated components.

2. Remove hexnuts and lock washers that secure the rotary solenoid to the recloser frame. Disconnect solenoid leads from the terminal block and remove rotary solenoid.

3. Remove hexnut spacers and washers from rotary solenoid mounting studs and attach to new solenoid. Install new rotary solenoid by reversing the foregoing procedure. Be sure solenoid leads are connected to correct terminals. Refer to figures 23 and 31.

Trip Solenoid

The trip solenoid, figure 36, is replaced as follows:

1. Disconnect leads from terminals A and B of the terminal block.

2. Loosen the hexnut that secures the nylon mounting strap to allow lead sleeving to slip through freely.

3. Remove two socket-head set screws that secure the trip solenoid to the mounting bracket. Detach trip solenoid from bracket. Two lock washers will be released.

4. Install new solenoid by reversing above procedure. Pass leads through nylon mounting strap and grommet in mechanism frame. Connect leads in any order. The trip solenoid is not polarity sensitive.

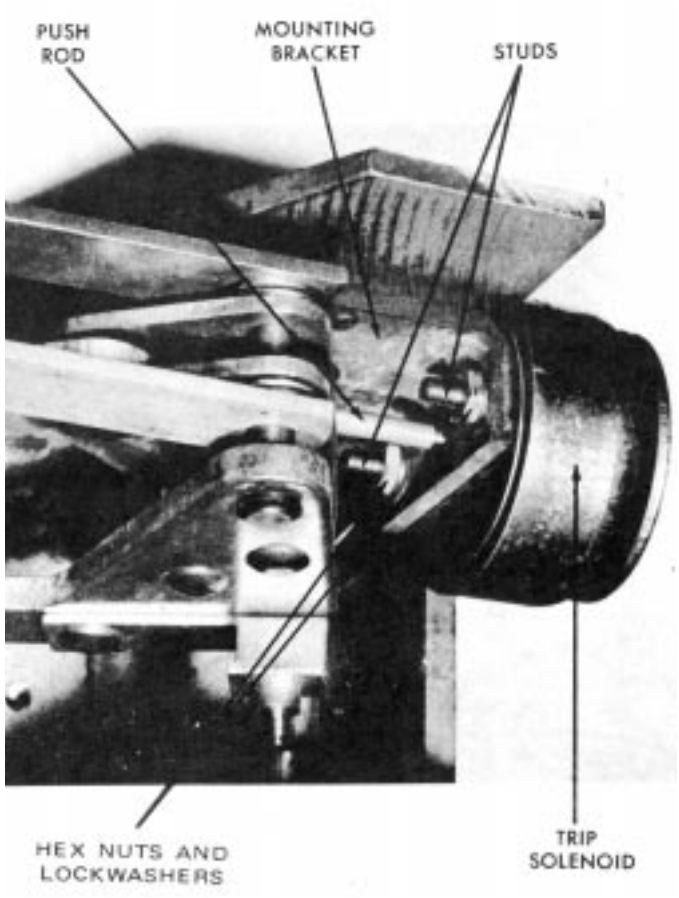

Figure 36
Properly installed trip solenoid.

PARTS LIST FOR TYPE WE RECLOSER INTERRUPTING MECHANISM (Units Below Serial No. 1001)

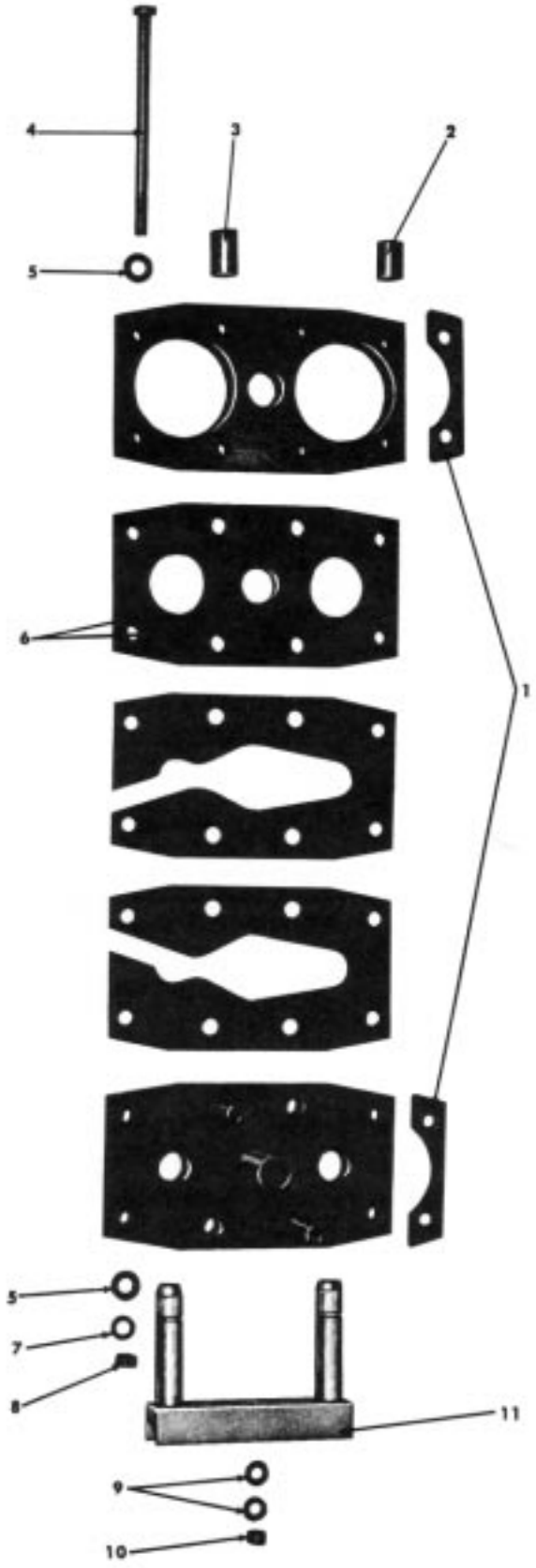

Item No.	Description	Catalog Number
1	Support Plate	**KP137W**
2	Spacer, short	**KP134W**
3	Spacer, long	**KP135W**
4	Cap screw, 3/8"—24 UNF2 x 6" SAE steel hex hd	**KP726**
5	Flat washer, 3/8", SAE steel	**KP807**
6	Gasket	**KP136W**
7	Lock washer, 3/8" med, steel	**KP5S6**
8	Hexnut, 3/8"—24 UNF2, steel	**KP589**
9	Flat washer, 5/16", SAE	**KP350**
10	Elastic stop nut, 5/16"—24NF3	**KP286**
11	Moving contacts and yoke assembly	**KA11W**
12	Interrupter repair kit	**KA834W**

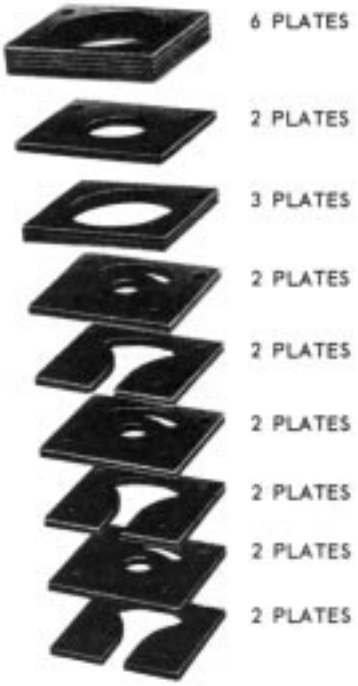

Plate arrangement.

Both stacks plus the base plate are shipped as a complete assembly.

PARTS LIST FOR TYPE WE RECLOSER INTERRUPTING MECHANISM (Units Below Serial No. 1001)

Item No.	Description	Catalog Number
16b	Contact tube assembly	**KA14W**
16c	Contact current exchange spring	**KA12W**
16d	Washer	**KP114W**
16e	Contact terminal nut	**KP112W**
16f	Spacer, silver pl	**KP115W**
16g	Contact hauling, silver pl	**KP120W**
16h	Fiber tube	**KP113W**
16k	Contact terminal stud, silver pl	**KP116W**
16l	Contact fingers	**KA13W**
16m	Spring, contact pressure	**KP119W**
16n	Spring spacer	**KP121W**

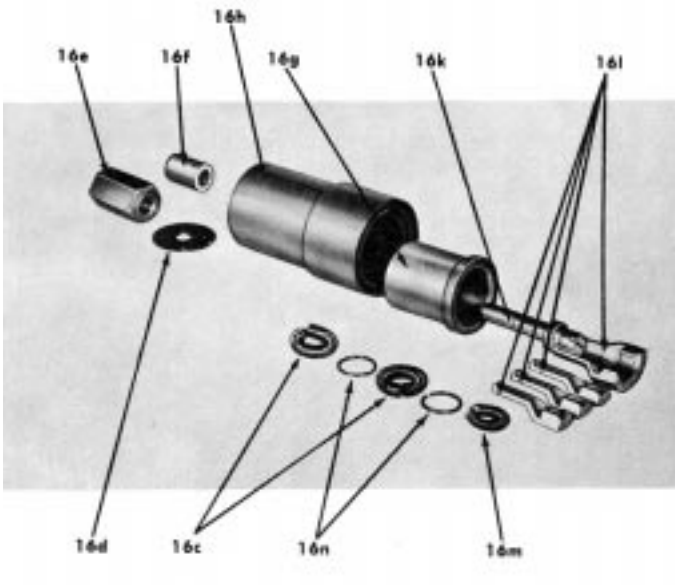

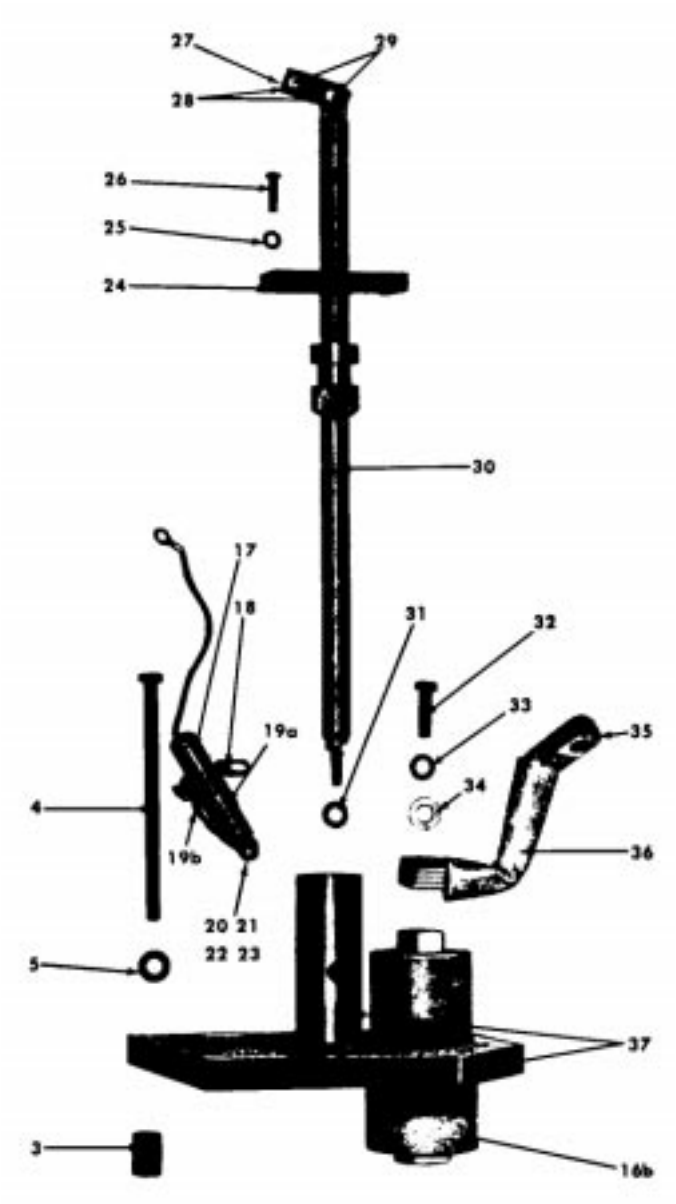

Item No.	Description	Catalog Number
17	Closing coil fuse assembly Add number to indicate voltage rating: 1 - 4.16 to 4.8 kv and 6.0 kv (color band black) 2 - 7.2 to 8.32 kv and 11.0 kv (color band yellow) 3 - 12.0 to 14.4 kv (color band one red) 4- 2.4 kv (color band two red)	**KA259R—**
18	Fuse terminal bracket	**KP257L**
19a	Fuse bracket (also included with item 17)	**KP714R**
19h	Fuse wire jumper assembly	**KA28W**
20	Mach screw, 1/4”-20 UNC2 x 1/2” brass rd hd	**KP473**
21	Washer, No. 14L, plain brass	**KP818**
22	Lock washer, 1/4". med, phos brz	**KP347**
23	Mach screw nut 1/4"-20 UNC2 x 1/2", brass hex	**KP274**
24	Lift rod guide, for phases A and B	**KP138W**
	Lift rod guide, for phase C	**KP139W**
25	Lock washer, 1/4" x .109” x .062”, stl	**KP337**
26	Mach screw, 1/4”—20 UNC2 x 7/8", stl rd hd	**KP452**
27	Lift rod link	**KP167R**
28	Retaining ring, WA516	**KP76**
29	Contact link pin	**KP285R**
30	Contact lift rod assem, for phases A and B	**KA16W**
	Contact lift rod assem, for phase C	**KA15W**
31	Washer, .687" x .343” x .062”	**KP35O**
32	Mach bolt, 3/8”—24 UNF2 x 1-1/4”, sil hrz hex hd	**KP727**
33	Lock washer, 3/8” med, phos brz	**KP326**
34	Washer No. 24S, silver pl brass	**KP986**
35	Jumper load assembly (4 per bushing)	**KA20W**
36	Insulating sleeve	**KP141W**
37	Interrupter frame assem, for phases A and B	**KA8W**
	Interrupter frame assem, for phase C	**KA9W**

PARTS LIST FOR TYPE WE RECLOSER

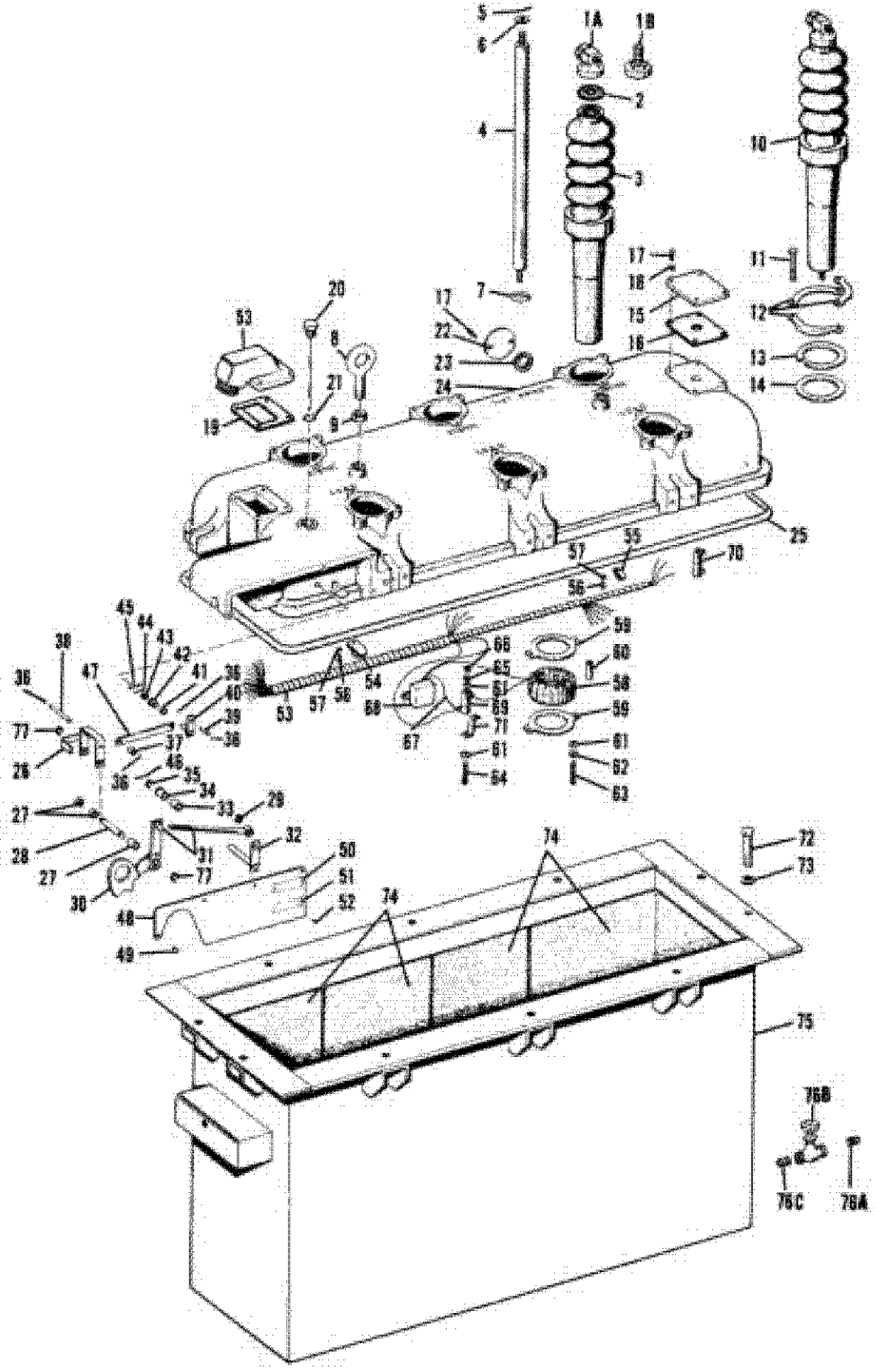

PARTS LIST FOR TYPE WE RECLOSER

Item No.	Description	Catalog Number	Quantity Per Recloser
1A	Terminal assembly,No.1/0 solid through 500 MCM	**KA17W**	6
1B	Threaded terminal stud, 1-1/8", 12 x 2-1/8" tin plated	**KP158W**	6
2	Bushing terminal gasket	**KP120L**	6
3	Porcelain bushing, standard	**KP1110R**	6
	Porcelain bushing, standard for use with BCT	**KP171W**	6
	Porcelain bushing, 17" creepage distance	**KP1578R**	6
	Porcelain bushing, 17" creep age distance, for use with BCT	**KP186W**	6
4	Conductor rod	**KP131W1**	6
	Conductor rod, for use with BCT	**KP131W2**	6
5	Roll pin, 1/8" X 15/16",lg.		
6	Washer	**KP130W**	6
7	"O" ring	**KP2000A8**	6
8	Lifting eyebolt	**KP1104R**	2
9	Palnut 5/8"—11UNC2,galv.	**KP2064A7**	2
10	Bushing assembly, standard	**KA18W**	6
	Bushing assembly, standard for use with BCT	**KA41W**	6
	Bushing assembly, 17" creepage distance	**KA79W**	6
	Bushing assembly, 17" creep age distance, for use with BCT	**KA58W**	6
11	Mach. bolt 3/8"—16UNC2 x 2" sstl hex hd	**KP763**	18
12	Bushing clamp	**KP1109R**	18
13	Bushing clamping ring aluminum	**KP1111R**	6
14	Lower Bushing gasket	**KP1112R**	6
15	Cover plate	**KP609R**	2
16	Mounting gasket for auxiliary switch	**KP610R**	1
17	Mach. screw, 1/4"—20UNC2 x 5/8" sstl rd hd	**KP613**	10
18	Lock washer, 14"-20UNC2 x 5/8", sstl rd hd	**KP563**	8
19	Terminal box gasket	**KP611R**	1
20	Oil level dipstick	**KA363R**	1
21	O-ring gasket	**KP2000A9**	1
22	Closing-tool port cover	**KP246R**	1
23	Port-cover plate gasket	**KP247R**	1
24	Head casting, (includes control shaft bushings, items 34 and 42)	**KA840R**	1
25	Head gasket	**KP120R**	1
26	Indicator and support assembly	**KA19RE**	1
27	Spacer	**KP3013A11**	3
28	Groove pin	**KP3126A4**	1
29	#WA514 retaining ring	**KP75**	1
30	Lockout handle assembly	**KA621R**	1
31	Link rod and pin assembly	**KA314R**	1
32	Handle lever assembly	**KA320R**	1
33	Spacer	**KP3010A6**	1
34	Handle shaft gearing (included with item 24)	**KP259R**	1
35	#WA516, retaining ring	**KP76**	1
36	#WA510, retaining ring	**KP72**	4
37	Spacer	**KP3006A9**	1
38	Groove pin	**KP3123A12**	1
39	Groove pin	**KP3123A3**	1
40	Shaft and lever assembly	**KA319R**	1
41	Spacer	**KP3007A8**	1
42	Shaft bearing (included with item 24)	**KP1055R**	1
43	Washer, 9/16" X .260" x .040," brass	**KP399**	1
44	Cotter pin, 3/32" X 1/2", brass	**KP302**	1
45	Roll pin, 3/32" X 1/2"	**KP504**	1
46	Roll pin, 1/8" X 3/4"	**KP502**	1
47	Link	**KP137RE**	1
48	Sleet hood cover plate	**KP283R**	1
49	Self-tapping screw, No. 12 x 1/2", sstl	**KP50**	5
50	Serial number nameplate	**KP190RE**	1
51	Voltoge rating nameplate, add correct number: 1 - 2.4 kv; 2 - 4.16 to 4.8 kv; 3 - 7.2 to 8.32 kv; 4 - 12.0 to 13.8 kv. 5 - 14.4 kv (Item 51 is also included with item 89)	**KP567R**	1
52	Self-tapping screw, No. 4 x 3/16", sstl	**KP21**	8
53	Receptacle wiring duct assembly assembly	**KA33RE1**	1
54	Cable clamp	**KP2006A2**	4
55	Cable clamp	**KP2006A1**	2
56	Machine screw, #8-32UNC x 5/16", lg rd hd stl cod pl	**KP678**	6
57	Lockwasher, #10 med sstl	**KP994**	6
58	Current transformers	**KP144RE**	4
59	Support, current transformers	**KP145RE**	8
60	Spacer	**KP3009A38**	8
61	Washer, #14S, plain, brass	**KP339**	16
62	Lockwasher, 18-8, 1/4" X 0.109" x 0.062", sstl	**KP563**	8
63	Cap screw 1/4"-20NC2 x 2-1/4" lg hex hd stl cad pl	**KP798**	8
64	Machine screw, #10-24NC2 x 2-1/2" lg rd hd stl cad pl	**KP668**	4
65	Lockwasher, #10 med.	**KP564**	4
66	Mach screw nut, #10-24NC2	**KP272**	4
67	Lead wire	**KPS339A1050**	2
68	Capacitor, #23355, 0.2 MFD Potter Co. 25OO VDCW		1
69	Resistor, 1K, 25W	**KP4022A36**	1
70	Resistor, 100 ohm, 25W	**KP4022A31**	3
71	Terminal bracket	**KP96GS**	4
72	Cap screw, 1/2"-13NC2 x 3-1/4" electro zn and iridite pl hex hd stl	**KP752**	10
73	Washer, wrought galv.	**KP2028A23**	10
74	Tank liner kit,see Note pg.6	**KA867R**	1
75	Tank assembly	**KA88W**	1
76A	Pipe plug, 1/2", solid sq. hd. brass	**KP2007A3**	1
76B	Gate valve, 100 lb. -1/2" brass, optional	**KA809R**	1
76C	Close nipple (included with item 76B)	**KP2039A1**	1
77	Retaining ring, WA518, stl	**KP79**	4

Page 26

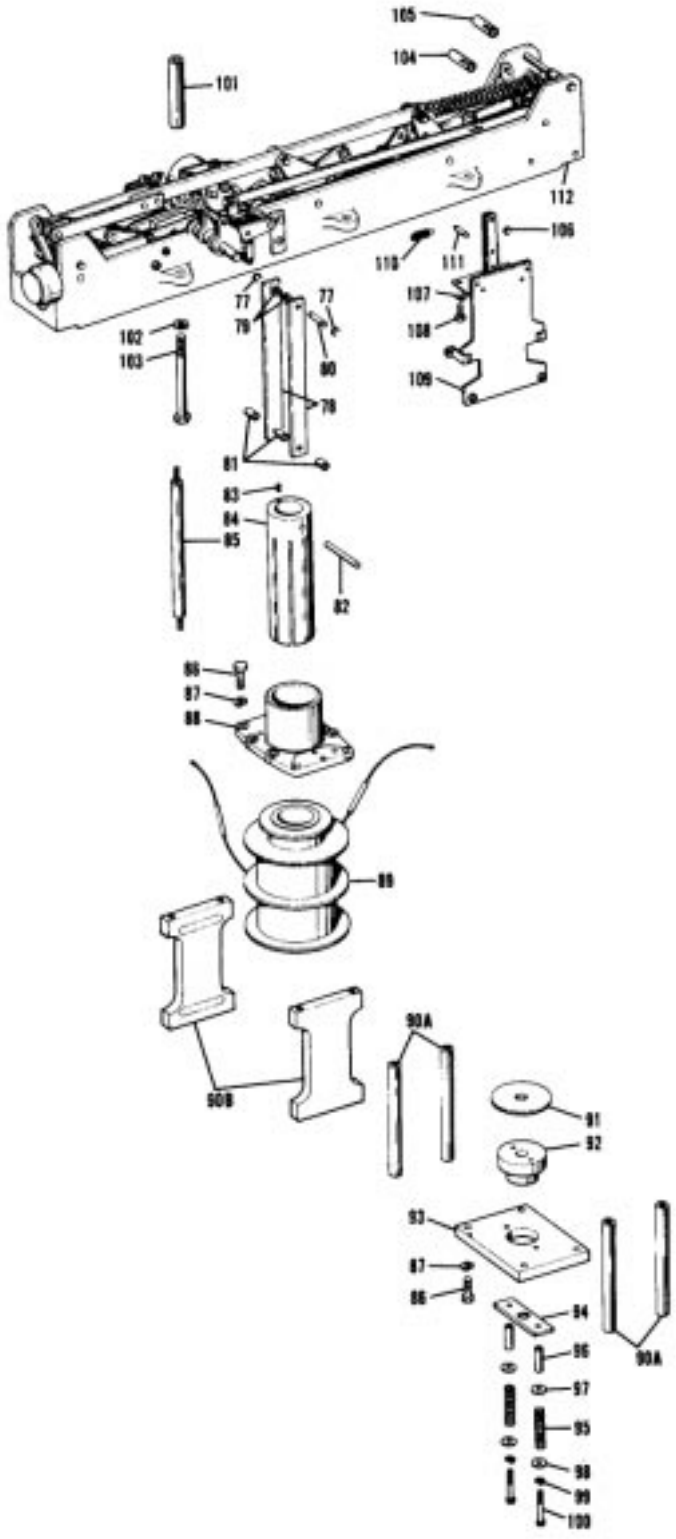

Item No.	Description	Catalog Number	Quantity Per Recloser
78	Insulating link for closing plunger	**KP103R**	2
79	SAE washer 13/16" x 13/32" .062", zinc pl	**KP1102**	2
80	Plunger link pin	**KP3126A2**	1
81	Spacer for plunger link	**KP3010A1**	3
82	Plunger link pin	**KP113R**	1
83	Set screw, No. 10-32 x 1/4", pin lock	**KP394**	1
84	Closing plunger	**KP104R**	1
85	Insulating spacer	**KA62R**	13
86	Cap screw, 3/8" -16UNC2 x 1-1/2", stl hex hd	**KP419**	8
87	Lockwasher, 3/8" med. steel	**KP556**	4
88	Upper solenoid frame	**KP100R2**	1
89	Closing coil and fuses kit (includes items 51, 91, and 153)		1
	60 cycle	**KA834R** _____	
	50 cycle	**KA861R** _____	
	40 cycle	**KA860R** _____	
	Add correct number: 1 - 2.4 kv, 2 - 4.16 to 4.8 kv; 3 - 7.2 to 8.32 kv. 4 - 12.0 to 13.8 kv, 5 - 14.4 kv; 6 - 6.0 kv; 7 - 125 vdc; 8 - 250 vdc, 9 - 11.0 kv; 10 - 3.3 kv		
90A	Rod, solenoid frame	**KP1669R**	4
90B	Solenoid frame shoe (Alternate far 90A)	**KP102R**	2
91	Fiber stop (also included with item 89)	**KP106R**	1
92	Closing plunger stop	**KP1667R**	1
93	Bridge plate	**KP1668R**	1
94	Plate	**KP1587R1**	1
95	Spring valve lift	**KP563R**	2
96	Spacer	**KP3009A6**	2
97	Washer, 1/2" AN light, stl.	**KP1103**	1
98	Washer, #14L, brass	**KP818**	2
99	Lockwasher, 1/4", med.	**KP337**	2
100	Cap screw 1/4"-20UNC2 x 2-1/4" stl hex hd	**KP751**	2
101	Head-to-frame spacer	**KP227R1**	6
102	Lockwasher, 1/2". med. stl. zn pl	**KP1107**	6
103	Socket cap screw, 1/2"-13UNC2 x 4-1/2", stl, hex (black oxide finish or equivalent)	**KP2036A3**	6
104	Quick-release control lever coupler	**KP1177**R	1
105	Quick-release counter shaft coupler	**KP1056R**	1
106	Retaining ring, WA514, stl.	**KP75**	7
107	Lockwasher, 1/4" x .109" x .0628t, stl.	**KP337**	3
108	Cap screw, 1/4"-20UNC2 x 3/4", stl hex hd	**KP735**	3
109	Closing solenoid contactor kit	**KA852R**	1
110	Contact toggle spring	**KP141R**	2
111	Contactor link pin	**KP1306R**	1
112	Mechanism frame assembly (see parts list page 28)	**KA68RE**	1
113	Hex nut, 3/8"-16UNC2	**KP869**	13

NOTE: Reclosers below serial number 480 included one lower solenoid gasket KP389R, one closing plunger stop KA824R, one base plate KP107R, one valve dish KP108R, one valve spring KP128R, and one valve seat assembly KA51R. Replace these parts with items 91 through 100

PARTS LIST FOR TYPE WE RECLOSER

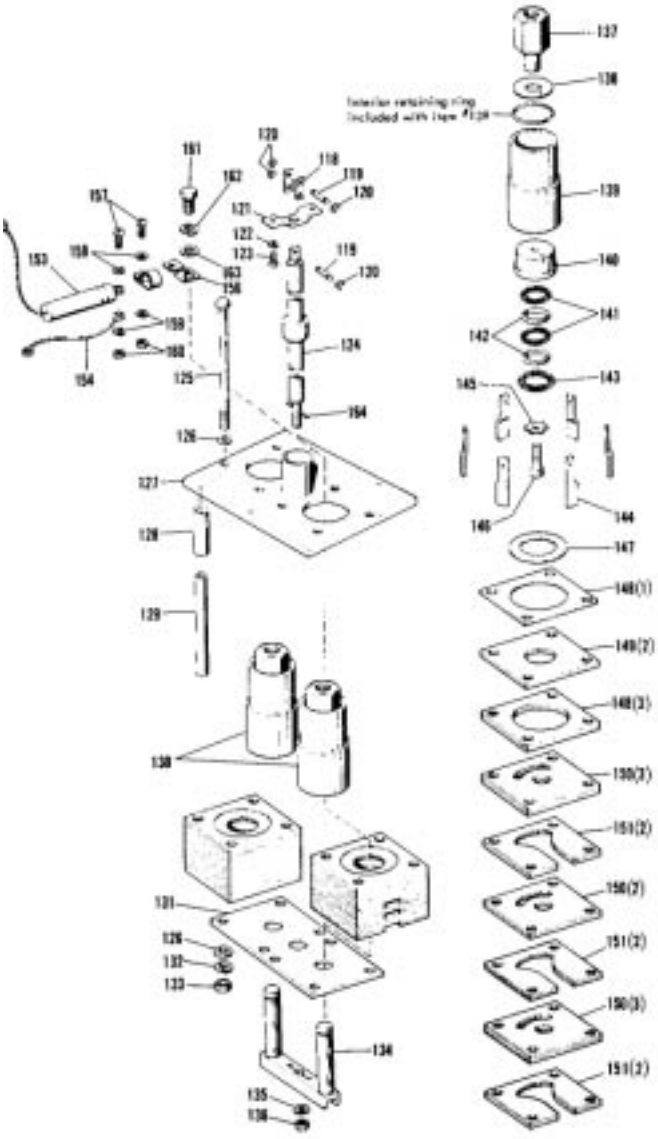

Interrupting Assembly
Units above serial no. 1000

Item No.	Description	Catalog Number	Quantity Per Recloser
118	Lift rod link	**KP167R**	6
119	Groove Pin	**KP3125A2**	6
120	Retaining ring, WA-516	**KP76**	12
121	Guide, contact rod	**KP518RV2**	3
122	Lock washer, 1/4" med.	**KP1040**	6
123	Screw, rd-hd, stl., 1/4"-20UNC 2A x 1/2"	**KP837**	6
124	Contact rod assembly, phases A and B	**KA95W1**	2
	Contact rod assembly, phase C	**KA95W2**	1
125	Cap screw, stl, 3/8"-16 UNC-2A x 6".	**KP1068**	24
126	Washer, 3/8", SAE, stl	**KP1112**	48
127	Contact frame assembly phases A and B	**KA127W**	2
	Contact frame assembly phase C	**KA128W**	1
128	Spacer	**KP3013A40**	24
129	Spacer	**KP3008A23**	24
130	Contact housing assembly	**K4125W**	6
131	Bottom plate	**KP214W**	3
132	Lockwasher, 3/8", med.	**KP1108**	24
133	Hex nut, stl, 3/8"-16UNC-2B	**KP276**	24
134	Contact yoke assembly	**KA11W**	3
135	Washer, 5/16", SAE, stl.	**KP350**	3
136	Stop nut, elastic	**KP2020A2**	3
137	Contact nut	**KP207W**	6
138	Washer, retaining	**KP515RV2**	6
139	Fiber tube (includes retaining ring)	**KP512RV**	6
140	Contact cup	**KP206W**	6
141	Contact spring	**KP117W**	12
142	Spring spacer	**KP210W**	12
143	Garter spring	**KP209W**	6
144	Contact arm assembly	**KA124W**	36
145	Contact retainer	**KP211W**	6
146	Cap screw, fil-hds 3/8"-24UNF 2 x 1-14"	**KP1069**	6
147	Gasket	**KP136W**	6
148	Plate	**KP1293M**	24
149	Plate	**KP213W**	12
150	Plate	**KP1294M**	48
151	Plate	**KP523RV**	36
152	Interrupter Kit (Includes two stacks of plates, items 148-151; and one bottom plate, item 131)	**KA836W**	3
153	Closing coil fuse assembly (also included with item 89) Add number to indicate voltage rating: 1 - 4.16 ta 4.8 kv and 6.0 kv (color band black) 2 - 7.2 ta 8.32 kv and 11.0 kv (color band yellow) 3 - 12.0 to 14.4 kv (color band one red) 4 - 2.4 kv (color band two red)	**KA259R** _____	1
154	Fuse wire jumper assembly	**KA28W1**	1
155	Fuse bracket (included with Item #153)	**KP714R**	1
156	Fuse terminal bracket	**KP257L**	1
157	Machine screw 1/4" - 20UNC2 x 1/2" brass, rd. hd.	**KP473**	4
158	Washer, #14L, plain, brass	**KP818**	4
159	Lockwasher, 1/4" med., phos. brz.	**KP347**	4
160	Machine screw nut, 1/4"-20UNC2, brass hex	**KP274**	4
161	Machine bolt, 3/8"-24UNF2 x 7/8" silver bronze hex hd.	**KP729**	6
162	Lock washer, 3/8" x 0.141" x 0.094", phos. brz.	**KP326**	6
163	Washer, 7/8" x 25/64" x 0.064", brass	**KP986**	6
164	Roll pin 1/8" x 13/16"	**KP506**	3

PARTS LIST FOR MECHANISM FRAME ASSEMBLY

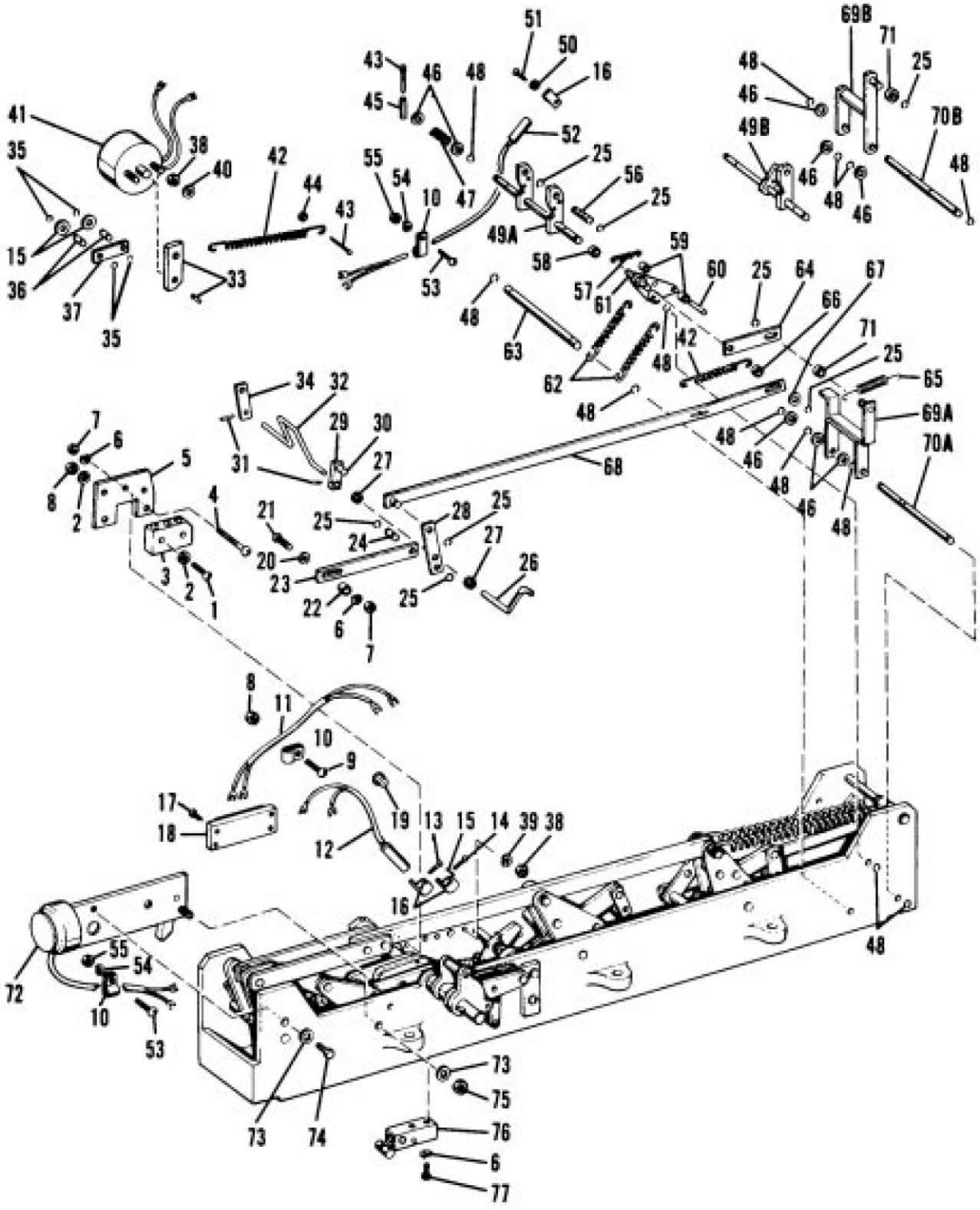

PARTS LIST FOR TYPE RE RECLOSER

Item No.	Description	Catalog Number	Quantity Per Recloser
1	Machine screw, #6-32NC2 x1" lg rd hd brass	**KP681**	2
2	Lockwasher, #6, internal tooth, bronze	**KP826**	5
3	Switch, hermetically sealed type 1HS3 with roller lever actuator (Minneapolis Honeywell)		1
4	Machine screw, #10-24NC2 x 3/4", lg rd hd, stl, cad	**KP497**	2
5	Bracket	**KP186RE**	1
6	Lockwasher, #10 med, stl, cad	**KP353**	6
7	Hex nut, #10-24NC2, stl, cad	**KP272**	4
8	Hex nut, #6-32NC2, brass, cad	**KP852**	3
9	Machine screw, #6-32NC2 x 1/2" lg rd hd, brass, cad	**KP641**	1
10	Cable clip	**KP2006A8**	8
11	Lead wire assembly	**KA62RE**	1
12	Mercury switch	**KP134RE**	1
13	Machine screw, #8-32NC2 x 1/4", lg rd hd, stl, cad	**KP500**	1
14	Machine screw, #8-32NC2 x 5/8" lg rd hd, stl, cad	**KP669**	1
15	Washer, #10L, plain brass	**KP560**	4
16	Nylaclip, HP-8N, Burndy	**KP2006A4**	4
17	Machine screw, #6-32NC2 x 5/8", lg fil hd, stl, cad	**KP1043**	2
18	7-terminal board	**KP882**	1
19	Grommet, rubber	**KP2017A4**	1
20	Washer, #10S, plain, brass, cad	**KP840**	1
21	Machine screw, #10-24NC2 x 16, lg rd hd, stl, cad	**KP670**	2
22	Spacer	**KP133RE**	1
23	Link	**KP128RE**	1
24	Groove pin	**KP3124A3**	1
25	Retaining ring, WA514	**KP75**	10
26	Arm	**KP1295R**	1
27	Spacer	**KP3009A9**	2
28	Lever	**KP130RE**	1
29	Lever, order with item #30	**KP118RE**	1
30	Pin, order with item #29	**KP119RE**	1
31	Roll pin, 3/32" X 1/2"	**KP504**	3
32	Transfer shaft	**KP152RE**	1
33	Roll pin and lever (included in item 41)		
34	Lever	**KP117RE**	1
35	Retaining ring, #WA510	**KP72**	4
36	Groove pin	**KP3123A4**	2
37	Link	**KP126RE**	1
38	Hex nut, 1/4"-28NF2, stl, cad	**KP290**	4
39	Lockwasher, 1/4", med	**KP337**	4
40	Washer, #14S, plain, brass, cod	**KP811**	3
41	Rotary solenoid assembly	**KA12RE**	1
42	Spring, counterbalance	**KP98L**	2
43	Cotter pin, 3/32" X 1", lg,brass	**KP433**	2
44	Spacer	**KP3007A30**	1
45	Roll pin, 1/8"X 3/4"	**KP502**	1
46	Washer, flat, 5/16", SAE, stl,cad	**KP350**	13
47	Spring	**KP1176R**	1
48	Retaining ring, WA516	**KP77**	19
49A	Handle shaft assembly (used with items 69A and 70A)	**KA15RE**	1
49B	Handle shaft assembly (used with items 69B and 70B)	**KA15RE**	1
50	Self-tapping screw, #6-32NC2 x 1/2", lg, Type F	**KP30**	2
51	Washer, #6L, plain, brass		2
52	Mercury switch subassembly	**KA63RE**	1
53	Machine screw, #8-32NC2 x 5/8.', lg, rd hd, brass, cad	**KP669**	6
54	Lockwasher, #8 med, phos. bronze, cad	**KP813**	6
55	Hex nut, #8-32NC2,steel, cad	**KP573**	6
56	Pin, reset lever	**KP280R**	1
57	Spring	**KP16GS**	1
58	Spacer	**KP330R**	1
59	Spacer	**KP3006A6**	2
60	Pin, spring anchor	**KP282R**	1
61	Trip lever assembly	**KA17RE**	1
62	Spring, bell crank	**KP12GS**	2
63	Shaft, spring anchor	**KP1488R**	1
64	Link	**KP1147R**	1
65	Spring	**KP731R**	1
66	Spacer	**KP3007A1**	1
67	Washer, #14S, plain,brass, cad	**KP811**	1
68	Auxiliary switch bar assembly	**KA253R**	1
69A	Trip latch lever (used with items 49A and 70A)	**KA647R**	1
69B	Trip latch lever (alternate used with items 49B and 70B)	**KA13RE**	1
70A	Shaft (used with items 49A and 69A)	**KP1678R**	1
70B	Shaft (alternate-used with items 49B and 69B)	**KP125RE**	1
71	Spacer	**KP3007A8**	1
72	Solenoid trip assembly (The solenoid may be ordered separately as part na. KP182RE)	**KA55RE**	1
73	Flat washer, 1/4" SAE, stl cad	**KP827**	2
74	Cap screw, 1/4"-20NC2 x 1/2" lg hex hd stl cad	**KP701**	1
75	Hex nut, 1/4"-20NC2, stl, cad	**KP279**	1
76	Cam roller assembly	**KA67R**	1
77	Machine screw, #10-24NC2 x 7/16",lg, rd hd,stl cad	**KP489**	2

PARTS LIST FOR MECHANISM FRAME ASSEMBLY

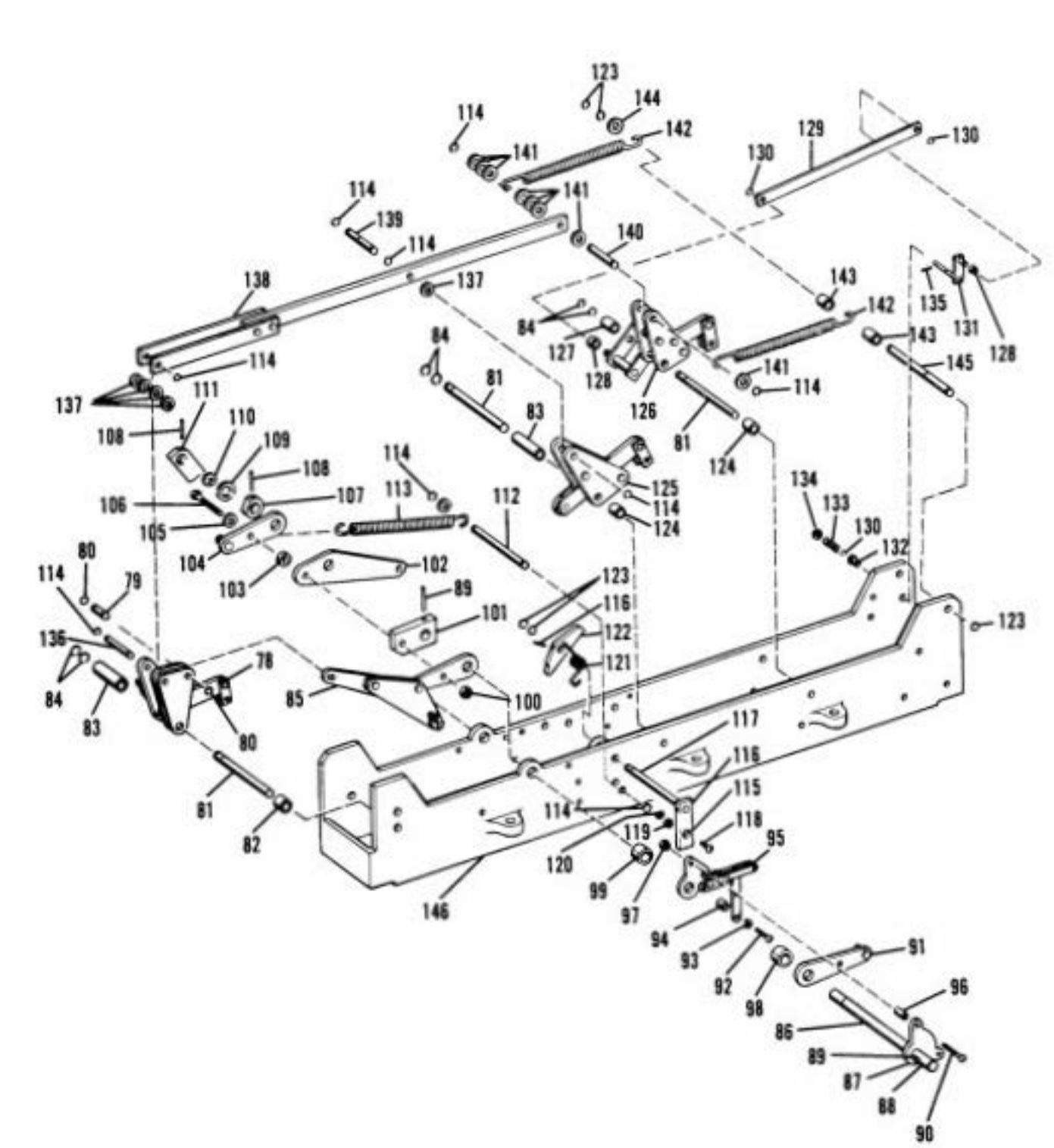

PARTS LIST FOR MECHANISM FRAME ASSEMBLY

Item No.	Description	Catalog Number	Quantity Per Recloser
78	Contact and toggle support assembly	**KA361R**	1
79	Toggle pin	**KP273R**	1
80	Retaining ring #5133-37 Type E	**KP86**	2
81	Shaft	**KP1198R**	3
82	Spacer	**KP3009A18**	1
83	Spacer	**KP3009A22**	2
84	Retaining ring #WA520	**KP100**	6
85	Toggle assembly	**KP450R**	1
86	Reclosing shaft (order only with items 87, 88 and 89)	**KP295R**	1
87	Roll pin 1/8” X 1-1/4”, lg. (order only with items 86, 88, and 89)	**KP520**	1
88	Toggle driver (order only with items 86, 87, and 89)	**KP1329R**	1
89	Roll pin, 7/32” X 1-1/4”, lg. (order only with items 86, 87, and 88)	**KP512**	2
90	Machine screw, #10-32NF2 x 1-1/2”, lg rd hd, stl, cad	**KP630**	1
91	Switch driver	**KP148R**	1
92	Machine screw, 1/4”-20NC2 x 1-1/4”, lg rd hd, stl, cad	**KP479**	2
93	Lockwasher, 1/4” med	**KP337**	4
94	Spacer	**KP3007A15**	2
95	Switch toggle assembly	**KA428R**	1
96	Spacer	**KP3006A4**	1
97	Stop nut, elastic, #10-32NF-2	**KP2020A1**	1
98	Spacer	**KP3015A2**	1
99	Spacer	**KP3015A3**	1
100	Stop nut, 5/l6”-24NF-3, elastic	**KP2020A2**	1
101	Reset lever	**KP166R**	1
102	Reset lever	**KP164R**	1
103	Spacer	**KP3011A4**	1
104	Reset arm and pin assembly	**KA17R**	1
105	Washer, 3/4” X 0.375". x 0.031" thk, brass, cad (optional)		1
106	Bolt	**KP346R**	1
107	Cam	**KP187RE**	1
108	Roll pin, 1/8” X 1”, lg	**KP518**	1
109	Washer	**KP2028A4**	1
110	Retaining ring, #5133-62, Type E	**KP87**	1
111	Mounting bracket	**KP163RE**	1
112	Shaft, spring anchor	**KP292R**	1
113	Spring, reclosing	**KP191R**	1
114	Retaining ring, WA516, Type C	**KP77**	19
115	Lever, reset trip (order only with items 116 and 117)	**KP194R**	1
116	Roll pin, 3/32" X 3/4", lg. (order only with items 115 and 117)	**KP523**	2
117	Shaft (order only with items 115 and 116)	**KP153RE**	1
118	Machine screw, #10-24NC2 x 1”, lg rd hd, stl, cad	**KP670**	1
119	Hex nut, #10-24NC2, stl, cad	**KP272**	1
120	Lockwasher, #10 med, stl,cad	**KP353**	1
121	Spring, reset lever	**KP172R**	1
122	Lever, reset trip	**KP171R**	1
123	Retaining ring, #WA518 Type C	**KP79**	5
124	Spacer	**KP3009A17**	2
125	Contact and trip arm assembly	**KA360R**	1
126	Contact and counter arm assembly	**KA359R**	1
127	Spacer	**KP3009A16**	1
128	Spacer	**KP3007A8**	3
129	Counter link	**KP183R**	1
130	Retaining ring,WA514, Type C	**KP75**	10
131	Contact lever and shaft assembly	**KA318R**	1
132	Bearing, shaft	**KP1055R**	1
133	Spring	**KP1180R**	1
134	Washer, #14S, plain, brass,cad	**KP811**	4
135	Roll pin, 3/32” X 1/2”	**KP504**	3
136	Groove pin	**KP3125A5**	1
137	Washer, flat, 5/16”, SAE, brz irr	**KP1120**	13
138	Contact bar assembly	**KA13R**	1
139	Contact bar pin	**KP290R**	1
140	Pin	**KP3125A9**	1
141	Washer, flat, 5/16” AN, stl,zn pi	**KP833**	8
142	Contact opening spring	**KP173R**	2
143	Spacer	**KP3011A34**	2
144	Washer, flat, 3/8” SAE, stl, cad	**KP547**	1
145	Spring anchor shaft	**KP284R**	1
146	Frame, operating mechanism	**KP189RE**	1

Cooper Power Systems

Quality from
Cooper Industries

Reclosers

COOPER
Cooper Power Systems

S280-40-5

Service Information

Type RVE and WVE, Three-Phase Maintenance Instructions

24.9 kv ● 400 Amp (Type RVE) 560 Amp (TypeWVE)

CAUTION: DO NOT ENERGIZE THIS EQUIPMENT OUT OF OIL

This manual, bulletin S280-40-5, for Type RVE and WVE electronically controlled reclosers covers:

- maintenance of the interrupting mechanism
- operational checks for circuit components attached to the head casting and mechanism frame
- testing of the control cable and bushing current transformers
- replacement of mechanical and electrical components
- replacement parts for the interruping unit

A separate manual, bulletin 280-75-2, is a service manual which covers the electronic control and provides information on general inspection, operational checks, and battery testing and charging. Procedures for testing the recloser and control together are found in the control installation manual, bulletin S280-75-1.

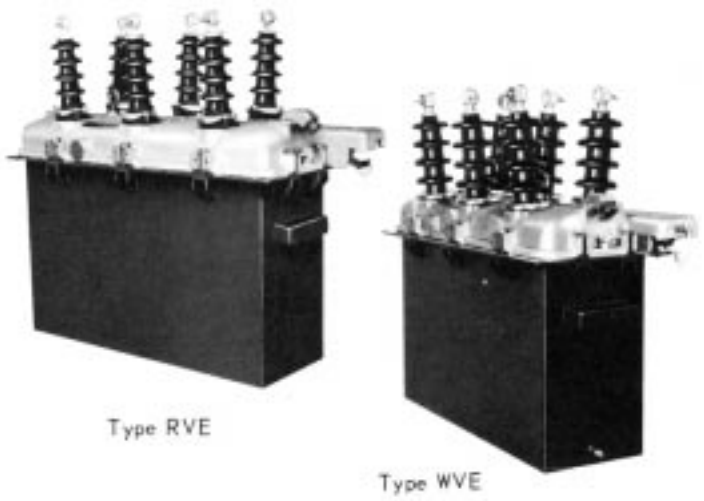

ORDER OF CONTENTS

	Page
Introduction	1
Description of Type Recloser	2
General Maintenance Information	2
Maintenance Intervals	2
Desirable Oil Specifications	4
Periodic Field Inspection and Maintenance	4
Shop Maintenance	6
Arc Interrupting Assembly Type RVE Reclosers	6
Arc Interrupting Assembly Type WVE Reclosers	8
Closing Solenoid	9
Closing Solenoid Contactor	10
Closing Solenoid Fuses	10
Bushings Type RVE Recloser	11
Type WVE Recloser	11
Removal of Head Casting	12
Mechanism Operation	13
Rating Changes	14
Adjustments	14
Operational Checks	14
Control Cable	15
Circuit Components	15
Bushing Current Transformers	17
Replacement Instructions for Circuit Components	18
Service Parts List	
Basic Parts List	
Types RVE and WVE Reclosers	
Tank and Cover Assemblies	21
Closing Solenoid Parts	24
Parts List for Interrupting Mechanism Type RVE Recloser	26
Parts List for Interrrupting Mechanism, Type WVE Recloser	27
Head Mechanism Parts List Type RVE and WVE Reclosers	28

These instructions do not claim to cover all details or variations in the equipment, procedure, or process described, nor to provide direction for meeting every possible contingency during installation, operation, or maintenance. When additional information is desired to satisfy a problem not covered sufficiently for the user's purpose, please contact your Cooper Power Systems sales engineer.

Replaces 281-75SB-1 dated 1/66 No change in text

DESCRIPTION OF RECLOSER

The Types RVE and WVE reclosers are self-controlled devices that protect distribution lines and equipment. Each unit consists of a circuit interrupting device, hereafter referred to as the recloser, an electronic control, and a connecting cable. Fault current sensing is achieved by the control which actuates the recloser. Circuit interruption is provided by the recloser.

A Type RVE or WVE recloser performs similarly to other reclosers in that it trips and automatically recloses. If a fault is temporary, reclosing of the contacts restores normal service. If the fault is permanent, the recloser senses this by performing a preset number of operations and locking open. All three phases of a Type RVE or WVE recloser open and lock out simultaneously.

Opening sequences of the recloser can be all fast, all delayed, or any combination of fast followed by delayed operations up to a total of four. Fast operations clear temporary faults before branch-line fuses can be damaged. Delayed openings allow time for fuses to clear so permanent faults can be confined to smaller sections of line.

Arcs are extinguished in the rugged arc-interrupter assemblies, figure 1, which utilize the proven selfblast principle of arc interruption. Moving contacts are driven by powerful opening springs that are charged when the recloser is closed.

Closing is accomplished when a line-voltage solenoid is connected across two phases of the distribution line. This connection occurs when a rotary solenoid, located inside the recloser, allows the closing solenoid contactor to close.

A trip-free control lever, linked with the interruption mechanism, is provided to lock the recloser open manually. This lever, located under the sleet hood, cannot be used to close the recloser, but it must be in the CLOSED position before the electronic control can cause the recloser to close. A contact position indicator, linked to the interrupting mechanism but independent of the control lever, is provided under the sleet hood.

GENERAL MAINTENANCE INFORMATION

Maintenance Ensures Reliable Performance

Reclosers are widely applied to increase service continuity, reduce system operating costs, and increase revenue. The Type RVE or WVE performs all these recloser functions by combining the flexibility and reliability of electronic control with proven interrupting mechanisms to achieve superior distribution circuit protection. However, the recloser can perform at peak efficiency only if it is maintained in good condition. While maintenance is relatively easy and inexpensive, it is important.

Oil plays an essential role in arc interruption, insulation, and reclosing. Arc interruption, however, contributes to oil decomposition. For this reason, the oil steadily diminishes in dielectric strength as the recloser continues to clear fault currents. Breathing action may also result in moisture absorption by the oil, thus lowering its insulation value. For effective recloser operation, oil must be replaced before it deteriorates beyond a safe level.

Climate and Duty Determine Maintenance Intervals

Frequency of maintenance depends upon local climatic conditions and the interrupting duty imposed on the recloser. M-E recommends the unit be inspected completely, cleaned, and filled with new oil at least once each year. If the recloser operates through a duty cycle in less than one year, periodic maintenance should be performed then.

The duty cycles are as follows:

Type RVE Recloser

Fault Current Percent of Interrupting Rating	Recloser Operations	Maximum Circuit X/R Value
15-20	28	4
45-55	24	8
90-100	10	15
	Total 62	

Type WVE Recloser

Fault Current Percent of Interrupting Rating	Recloser Operations	Maximum Circuit X/R Value
15-20	28	4
45-55	20	8
90-100	10	15
	Total 58	

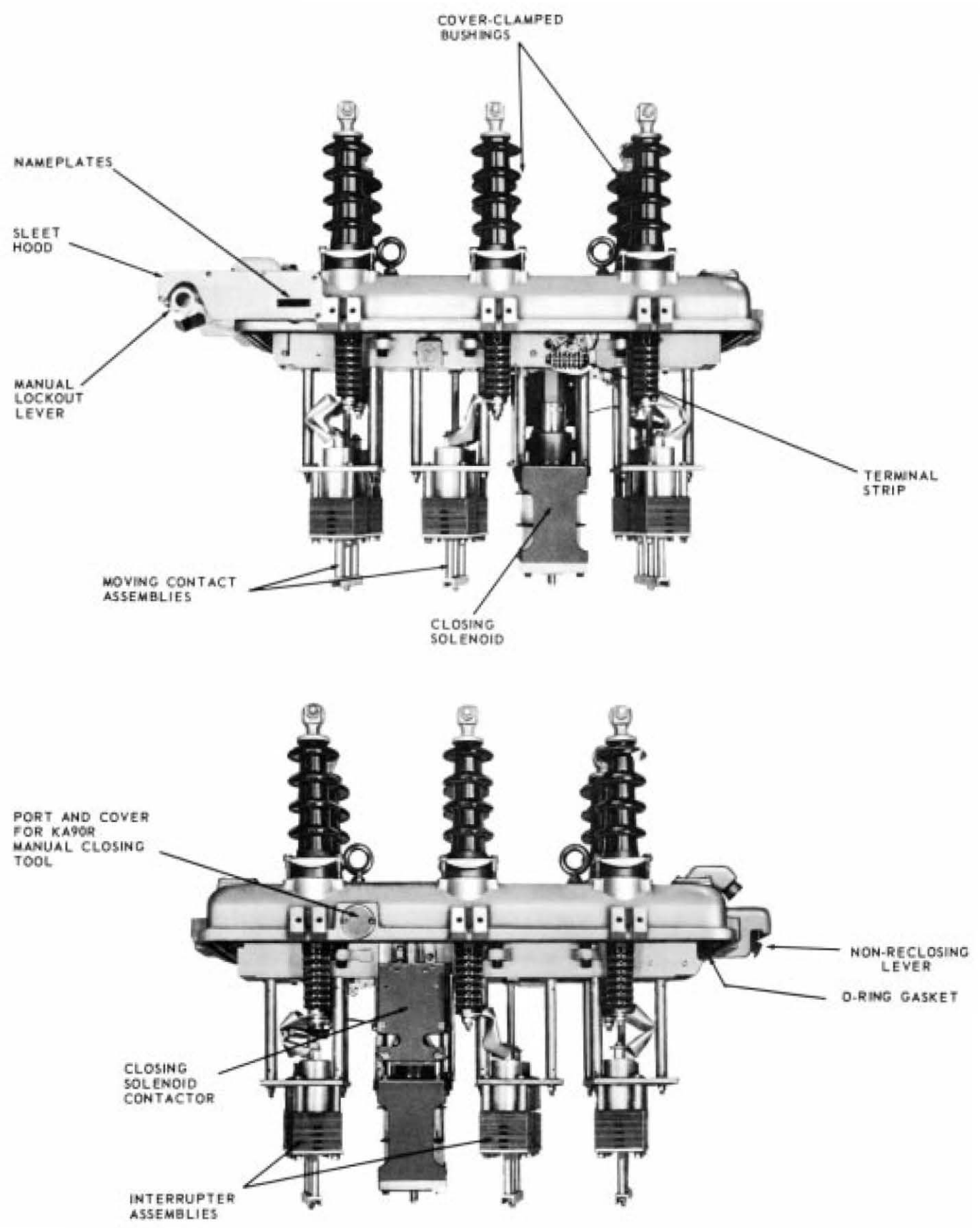

Figure 1
Principal Components - Types RVE and WVE Reclosers
(Type RVE Shown here)

GENERAL MAINTENCE INFORMATION - CONT'D.

High Dielectric Strength Maintains Oil Effectivness

Although the Type WE can undergo a complete duty cycle without requiring an oil change, more frequent oil changes will be required if the majority of fault currents are near the maximum interrupting rating. Oil that has become contaminated with carbon and sludge, or has a dielectric strength of 18 kv or lower, should be replaced. Use only oil that meets the requirements tabulated below for L-M switchgear. Refer to "ASTM Methods of Testing Electrical Insulating oil," Publication D117. This publication is available from the American Society for Testing Materials, 1916 Race Street, Philadelphia, Pennsylvania.

CHARACTERISTICS OF OIL FOR M - E SWITCHGEAR

Color: nearly colorless
- ASTM colorimeter .....1.0 max.
- Union colorimeter .....2.0 max.

Reaction .....neutral
Neutralization number .....0.03 mg KOH/g max.
Free sulphur .....none
Corrosive sulphur .....3 max.
Steam emulsion number.....25 seconds max.
Flash point.....145°C min. (293^{0} F)
Fire point .....160°C min. (320^{0} F)
Pour point.....(-45.6^{o}C max.) (-50° F)

Viscosity:
- at 37.8^{o}C (100°F)
  Saybolt Universal .....62 sec. max.
- at 0°c (32°F)
  Sayholt Universal .....320 sec. max.

Specific gravity:
- at 20.0^{o}C (68.0^{o}F) . .....0.895/cc max.

Co-efficient of expansion:
- at 0°c (32°F).....0.000725
- at 100^{0} C (212^{0} F) 0.000755

Interfacial tension.....40 dynes/cm min.
Dielectric constant.....2.2
Dielectric strength .....26,000 volts min.
Weight per gallon.....7.5 lbs.
Water content .....40 parts/million max. (Fischer test)

Servicing Locations Vary with Amount of Maintenance

Routine inspection, minor maintenance, most adjustments, and replacement of oil can be performed on a recloser without removing it from the mounting frame. Repairs or major maintenance work should be performed in the shop.

PERIODIC FIELD INSPECTION AND MAINTENANCE

Each periodic check should include at least the following steps:

1. **BYPASS, TRIP, AND DE-ENERGIZE THE RECLOSER**
   Disconnect the control cable from the recloser.

2. **INSPECT EXTERNAL COMPONENTS**
   Check for broken bushings, paint scratches, or other mechanical damage.

3. **LOWER THE TANK TO EXPOSE INTERNAL COMPONENTS**
   Attach sheaves of the tank-hoisting mechanism to recloser tank, and take up slack. Then remove the ten bolts to release the tank from the head casting.

   CAUTION: Be sure the recloser is tripped before lowering the tank, so the recloser will not be tripped accidentally while the mechanism is out of oil.

4. **INSPECT MOVING CONTACTS**
   Arcing tips of the moving contacts can experience considerable erosion before replacement is necessary. The contacts should be replaced before their effectiveness is impaired by erosion of the load current contact surfaces.

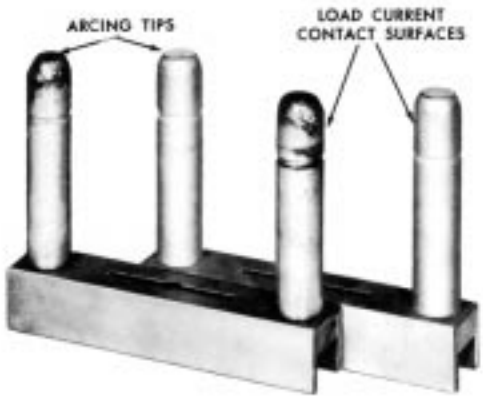

Figure 2
Left: moving contact assembly after one full duty cycle; right; contact assembly new.

Figure 2 shows a set of moving contacts after they have experienced severe interrupting duty, and a new set for comparison. The used contacts shown have reached the condition where they should be replaced.

If moving contacts appear to have further useful life, inspection of the arc interrupter chamber and stationary contacts can be omitted. These components are designed to last at least the life of the moving contacts.

5. INSPECT STATIONARY CONTACTS

If moving contacts of any phase or phases are in questionable condition, the corresponding stationary contacts should be inspected. Refer to page 7 or 9 for instructions on removal and reassembly of the fiber plates that form the arc interruption chambers. Removal of these plates is necessary for inspection of the stationary contacts.

Figure 3 shows a stationary contact assembly after one duty cycle and a new assembly for comparison. Note that erosion of the load current contact surfaces has started. The six contact segments or the entire assembly should be replaced.

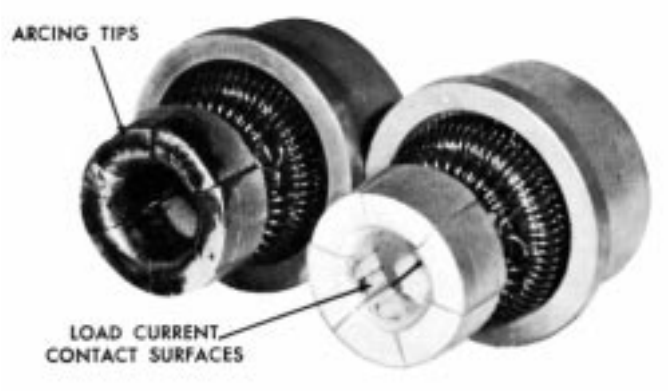

Figure 3
Left: Stationary contact assembly after one full duty cycle;
right: new contact assembly.

6. INSPECT ARC INTERRUPTER CHAMBERS

The insignificant cost of the fiber plates making up the arc interrupter chambers permits complete replacement whenever the stationary contacts are replaced. A visual comparison of bottom and top plates will indicate necessity for replacement. The top plates closest to the stationary contacts and nearest to the most arcing will show enough erosion to provide a decision for replacement.

7. CLEAN ALL INTERNAL COMPONENTS

Remove all carbon traces by wiping with a clean, lint-free cloth. Pay particular attention to all insulating members. Flush the mechanism with clean, dry transformer oil.

CAUTION: Never use volatile solutions, detergents, or water-soluble cleaners.

8. DRAIN OLD OIL

Remove the 1/2-inch pipe plug at the bottom of the tank, or open the tank valve if one has been installed. Rinse the tank with clean oil, and wipe out all carbon traces with a clean lint-free cloth.

9. INSPECT TANK LINERS

Any soft or spongy areas in the liners indicate moisture has been absorbed. These areas are most likely to occur near the bottom of the tank. When replacing liners, be sure the new liner installed in each section is the same size as the original.

If interrupting duty is severe, the tank liners may be eroded near the exhaust ports of the arc interrupting structures. Replace any liners that show appreciable erosion.

Replacement liners come in a kit; as part number KA867R. See Parts List, Page 23, item 86.

10. CHECK CIRCUIT COMPONENTS ATTACHED TO THE RECLOSER COVER, FRAME, AND OPERATING MECHANISM

These components are identified in figures 17, 24 and 27. Be sure all wiring to the terminal strip is secure at each terminal. The rotary solenoid and trip solenoid should be firmly attached to the recloser frame.

Check mercury switches attached to the counter shaft and main shaft. They should be securely held in place by the nylon mounting straps. Check the microswitch mounted above the main shaft. It should be firmly held in place by the mounting bracket. Check bushing current transformers. See that wiring is in order.

11. FILL TANK WITH OIL

Use only new transformer oil with dielectric strength of at least 26 kv, as measured across a standard 0.1-inch gap in accordance with methods presented in ASTM Publication D117. The oil level should be 2-1/4 inches from the top of the tank with the mechanism removed. The level can be double checked with the oil level gauge after the mechanisms and head casting have been fastened in place. The capacity of the tank is approximately 38 gallons

GENERAL MAINTENANCE INFORMATION - CONT'D.

12. REPLACE TANK

Clean the -ring head gasket and the tank gasket seat. Move the control lever to the closed position to avoid any possible binding while raising the tank. Raise the tank and secure it to the head casting with the ten head bolts.

13. CHECK LOCKOUT LEVER AND CONTACT POSITION INDICATOR

Correct operation of these components can be observed by manually operating the recloser.

14. MANUAL OPERATION

Remove the closing tool port cover and gasket and insert a KA90R closing tool. Manual operation can now be achieved by closing with the KA90R tool and tripping the recloser with the lockout lever. See figure 4.

CAUTION: Never use the KA90R tool on an energized recloser.

If a recloser is to be tripped out of oil, use the closing tool to open the contacts. While one person turns the tool clockwise against the stop, another can move the trip lever, shown in figure 5, to the right. Now let the tool slowly rotate counterclockwise to open the contacts. Replace port cover and gasket when manual operation is completed.

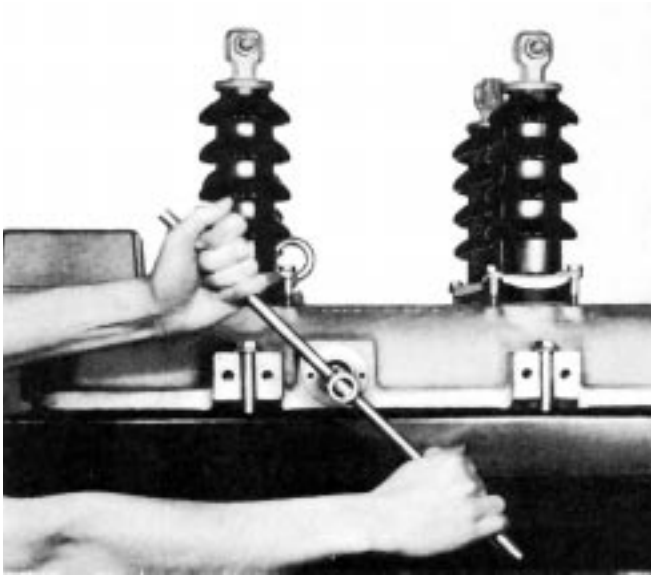

Figure 4
Rotating the KA90R tool clockwise to manually close the recloser.

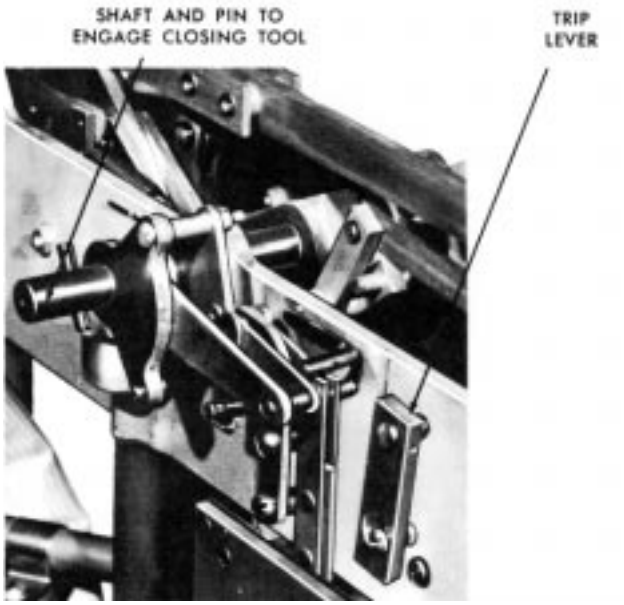

Figure 5
Move trip lever to the right to release recloser when opening with closing tool.

15. CONNECT CONTROL CABLE TO RECEPTACLE ON RECLOSER HEAD CASTING

Place recloser in service according to procedures outlined in the recloser installation manual, bulletin S280-40-2.

NOTE: Electronic control can be checked out with or without recloser in service. Periodic operational checks can be made according to the control service manual.

SHOP MAINTENANCE

When shop maintenance or repairs are to be performed, remove the ten bolts that secure the head casting to the tank. With suitable hoist, raise the recloser mechanism out of the oil and allow it to drain. The recloser can be left suspended by the hoist, inverted and placed on a workbench, or the mechanism frame ends can be supported by a special rack.

ARC-INTERRUPTER ASSEMBLY, TYPE RVE RECLOSER

(See Page 8 for WVE Instructions)

After the RVE recloser has operated through a complete duty cycle, the arc interrupter assembly should be completely dismantled and any worn parts replaced. Refer to Figure 6.

1. Remove the vibration-proof nut that secures the moving contact yoke to the contact-lift rod. Two square spacer washers will be released.

SHOP MAINTENANCE (CONT'D.)

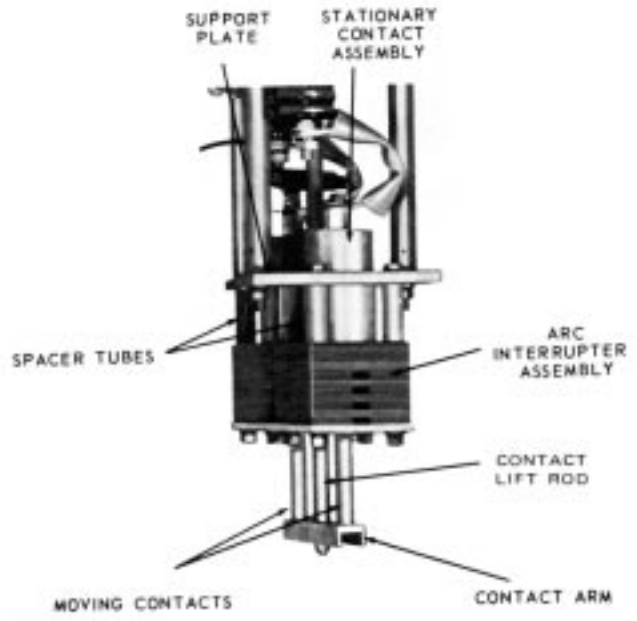

Figure 6
Arc interrupting assembly.

2. Drive out the roll pin located near the end of the contact-lift rod. Be sure to back the rod with a heavy, solid object when driving out the roll pin.

3. Slide the contact yoke from the lift rod. Save all the spacer washers.

4. Remove the terminal bolt from the top of each stationary contact assembly.

5. Remove hex nuts, flat washers, and lock washers from bottom of interrupter assembly.

6. Slide the arc interrupter assembly downward. Figure 7 shows the individual parts in the order of removal.

7. Examine the stationary contact segments to determine if arc erosion has spread to the load contact surfaces. If so, the contact segments only, or the entire stationary contact assembly, should be replaced.

8. Insert a large screwdriver through the stationary contacts to engage the fillister screw slot. With a box wrench, loosen and remove the contact nut while the screwdriver is held securely in a vise. Remove contact arms, contact cup, and retaining washer, leaving the retaining ring, which rests in a slot on the inside of the tube. Figure 8 shows a dismantled stationary contact assembly.

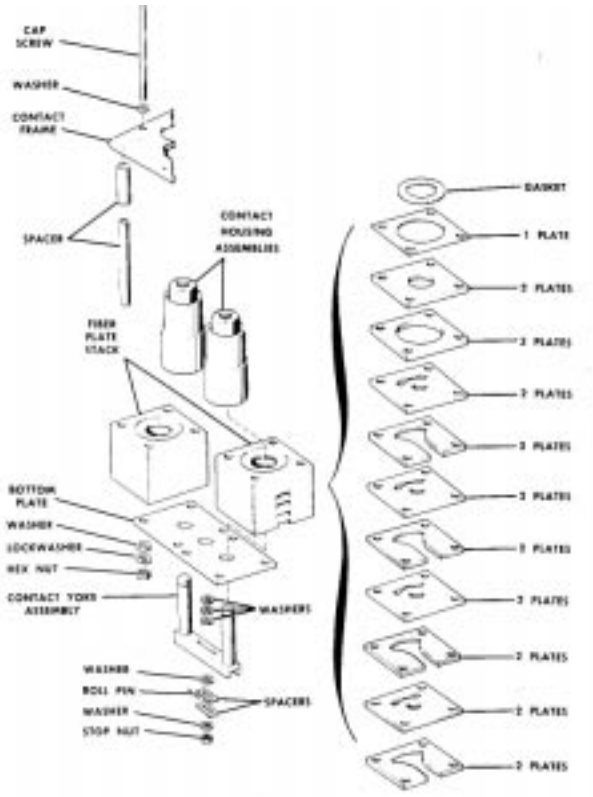

Figure 7
Components of Arc Interrupter Assembly
Type RVE Recloser

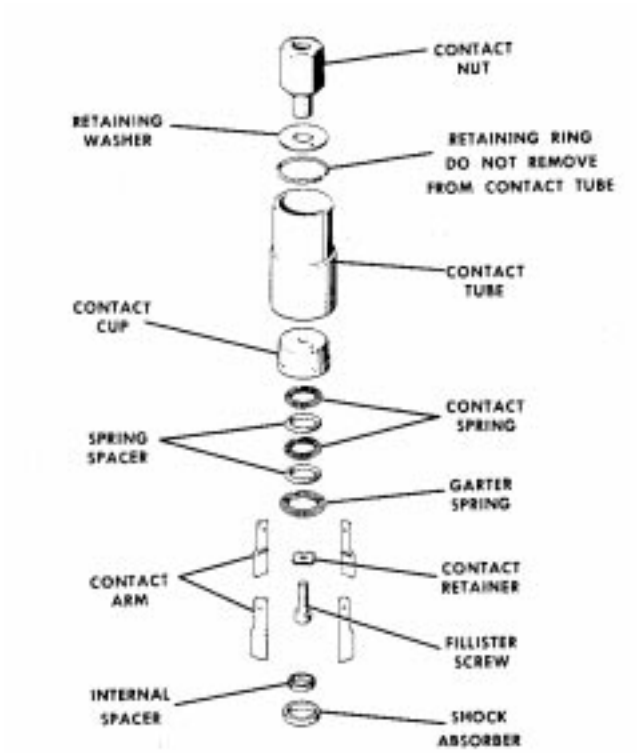

Figure 8
Stationary Contact Assembly Components
Type RVE Recloser

SHOP MAINTENANCE (CONT'D.)

9. Reassemble the stationary contacts in the following manner: Place the four contact arms around the contact retainer, fillister screw, and internal spacer. Each of the four teeth on the retainer should fit into a hole on a contact segment. Place the garter spring, contact springs, and spring spacers over the small end of the assembly in the following order — garter spring, spring spacer, contact spring, spring spacer, and contact spring. Slip the shock absorber ring over the opposite end. Insert this assembly into the contact cup by twisting in clockwise. Then push the cup and contacts into the large end of the tube. Insert the retaining washer and contact nut from the opposite end. Use the screwdriver to hold the fillister head cap screw while the contact nut is tightened.

10. Replace fiber plates in the arc interruption assembly, if necessary. Refer to periodic maintenance, page 5.

11. Examine the insulating support stringers for evidence of tracking or moisture absorption. Failure of these members is rare, but if any show tracking, replace as follows:

    a. Remove the hex nuts, lock washers, and flat washers that secure the phenolic contact support plate to the stringers.

    b. Loosen the stringers with pliers and remove.

12. Refer to figure 7 and reassemble the interrupter in the following order.

    a. Place the fiber plates in two stacks on top of the bottom plate, in the order shown in Figure 7. Make sure that the gasket is included. The exhaust ports open to the outside of the assembly.

    b. Drop the long spacer tubes into the corner holes of the two stacks. The lower end of each spacer tube should be flush with the lower surface of the bottom plate. Place the short spacer tubes over the portions of the long spacer tubes which protrude from the stacks.

    c. Position the stationary contact assemblies on top of the two stacks.

    d. Place the assembly in position on the contact frame and secure it with the eight mounting bolts. Reconnect the leads to the contact nuts.

    e. Install the moving contacts on the lift rod.

ARC-INTERRUPTER ASSEMBLY,
TYPE WVE RECLOSER
(see Page 6 for RVE Instructions)

After the WVErecloser has operated through a complete duty cycle, the arc interrupter assembly should be completely dismantled and any worn parts replaced. Refer to figure 6.

1. Using a 1/2-inch thin wall socket, remove the vibration-proof hex nut that secures the contact yoke to the lift rod. Gently tap contact arm to remove contacts from the lift rod.
2. Remove the terminal bolt from the top of each stationary contact assembly.

3. Remove hex nuts, flat washers, and lock washers from bottom of interrupter assembly.

4. Slide the arc interrupter assembly downward. Figure 9 shows the individual parts in the order of removal.

5. Examine the stationary contact segments to determine if arc erosion has spread to the load contact surfaces. If so, the contact segments only, or the entire stationary contact assembly, should be replaced.

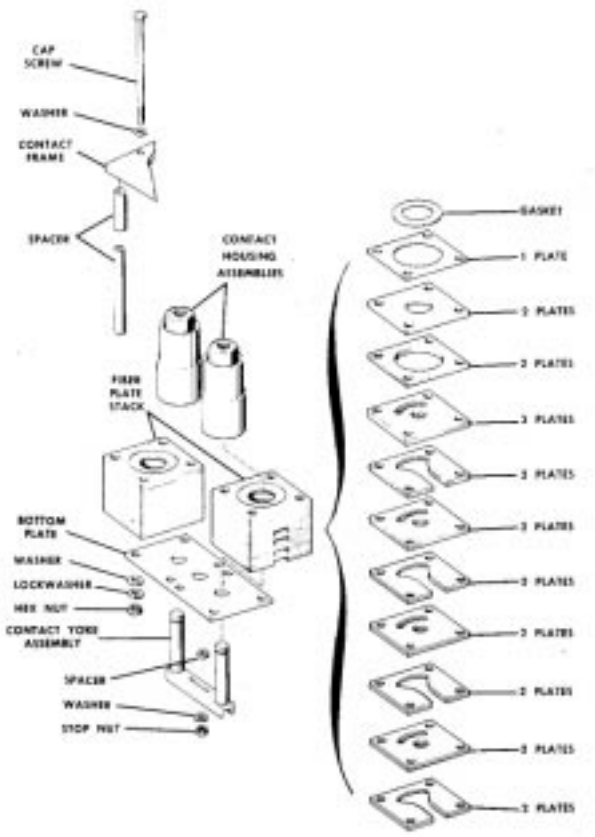

Figure 9
Components of arc interrupter assembly.
Type WVE Recloser

6. Insert a large screwdriver through the stationary contacts to engage the fillister screw slot. With a box wrench, loosen and remove the contact nut while the screwdriver is held securely in a vise. Remove contact arms, contact cup, and retaining washer, leaving the retaining ring which rests in a slot on the inside of the tube. Figure 10 shows a dismantled stationary contact assembly.

7. To reassemble the stationary contacts slip the contact retainer onto the fillister head cap screw and arrange the six contact segments around the screw and retainer. Each of the six teeth on the retainer should fit into a hole on a contact segment. Place the garter spring, contact springs, and spring spacers over the small end of the assembly in the following order: garter spring, spring spacer, contact spring, spring spacer, and contact spring. Insert this assembly into the contact cup by twisting in clockwise. Then push the cup and contacts into the large end of the tube. Insert the retaining washer and contact nut from the opposite end. Use the large screwdriver to hold the fillister head cap screw while the contact nut is tightened.

8. Replace the fiber plates in the arc interruption assembly if necessary. Refer to periodic maintenance, page 5 for the method of determining when these plates should be replaced.

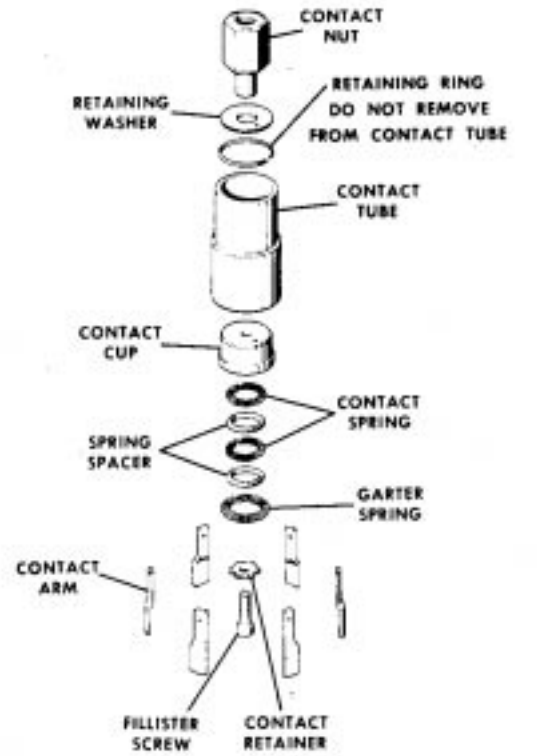

Figure 10
Stationary contact assembly components
Type WVE Recloser

9. Examine the insulating support stringers for evidence of tracking or moisture absorption. Failure of these members is rare, but if any show tracking, replace as follows:

   a. Remove the hex nuts, lock washers, and flat washers that secure the phenolic contact support plate to the stringers.

   b. Loosen the stringers with pliers and remove

   c. Install new members as required and reassemble.

10. Refer to figure 9 and reassemble the interrupter in the following order:

    a. Place the fiber plates in two stacks on top of the bottom plate, in the order shown in figure 9. Make sure that the gasket is included. The exhaust ports open to the outside of the assembly.

    b. Drop the long spacer tubes into the corner holes of the two stacks. The lower end of each spacer tube should be flush with the lower surface of the bottom plate. Place the short spacer tubes over the portions of the long spacer tubes which protrude from the stacks.

    c. Position the stationary contact assemblies on top of the two stacks.

    d. Place the assembly in position on the contact frame and secure it with the eight mounting bolts. Reconnect the leads to the contact nuts.

    e. Install the moving contacts on the lift rod.

CLOSING SOLENOID

Little maintenance is required for the closing solenoid. However, if the recloser is to be operated at another voltage, replace the solenoid coil as follows:

1. Disconnect the two coil leads from the closing solenoid contactor, figure 11.

2. Remove four capscrews on the bottom of the solenoid frame and lower the coil and base plate. Lift the coil from the base plate.

SHOP MAINTENANCE (CONT'D.)

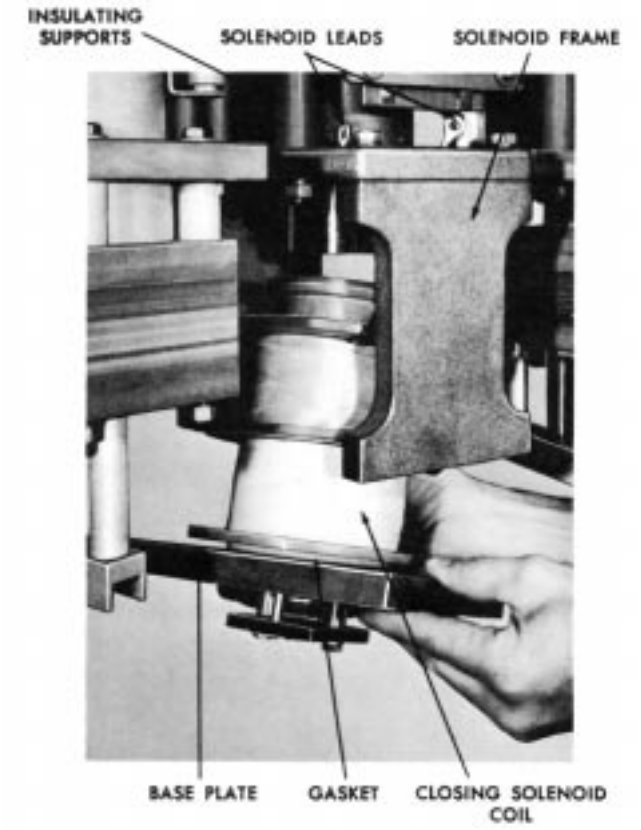

Figure 11
Removing closing solenoid coil.

3. Examine the insulating supports for evidence of tracking or moisture absorption. Replace any defective members as follows:

   Remove the hexnuts, lock washers, and flat washers that secure the solenoid frame to the supports. Then lower the solenoid frame slowly to avoid damaging the closing plunger. Loosen defective supports with pliers and remove. Install new members as required and reassemble.

4. Install the closing solenoid. Be sure to use a new gasket between the coil and solenoid base plate. Also see that solenoid leads clear insulating supports and the solenoid frame by at least 1/2-inch.

CLOSING SOLENOID CONTACTOR

If the double-break contacts of the closing-solenoid contactor require replacement, install an entire new closing-solenoid contactor as follows:

1. Disconnect closing solenoid and fuse leads from contactor.

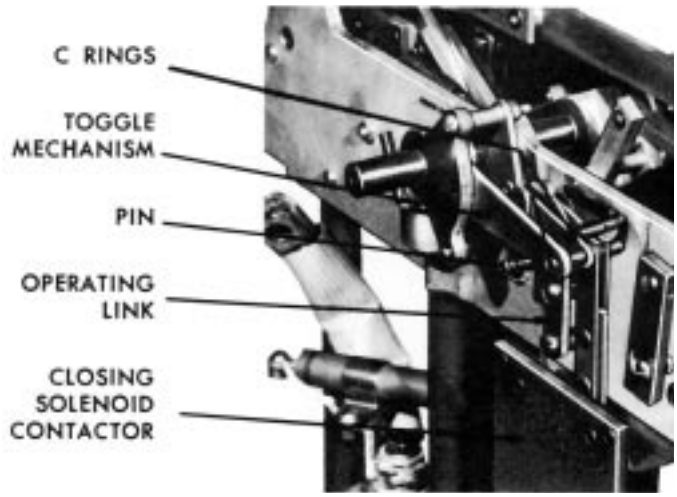

Figure 12
Releasing contact operating rod of closing solenoid contactor from toggle mechanism.

2. Remove three C rings to release pin that connects the operating link to the toggle mechanism, figure 12. Two C rings are between the operating link and toggle mechanism. The third is located on the outer end of the pin.

3. With a long nose pliers, release the springs between the operating link and toggle from the pin. Then push pin through toggle mechanism and operating link.

4. Remove the three hexhead cap screws that secure the contactor to the underside of the recloser frame. Contactor is now free to be removed.

5. Replace the contactor by reversing the above procedure. Use new C rings on toggle-mechanism pin. Be sure closing-solenoid and fuse leads clear insulating supports and grounded parts by at least 1/2-inch.

CAUTION: Fuse and ground leads must be connected to upper terminals of contactor.

CLOSING SOLENOID FUSE

To replace a blown closing solenoid fuse, simply disconnect the long lead at the closing-solenoid contactor, the short lead at the fuse end, and loosen the mounting strap. Slide out the fuse and install a new one.

A tag attached to each closing solenoid coil shows the color band coding and catalog number of the correct fuse to protect the coil. Table I also shows this information. Note that the voltage rating represents the phase-to-grounded neutral voltage. Be sure fuse lead clears any grounded parts and insulating supports by 1/2 inch.

TABLE 1

Closing Solenoid Phase-to-Phase Neutral Voltage, kv	Fuse Catalog Number*	Color Band	TCC Number (See figure13)
7.2 to 8.32 and 11.0	**KA259R-2**	Yellow	3
12.0 to 14.4	**KA259R-3**	Red	2

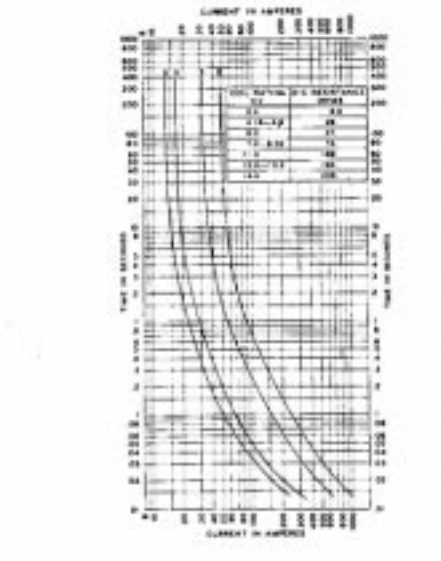

Figure 13
Fuse time-current characteristics for protection of closing solenoid.

BUSHINGS, TYPE RVE RECLOSERS

Maintenance of bushings is generally limited to an occasional cleaning. However, if a bushing should become cracked or broken, replace it as follows:

1. Remove hexnut, lock washer, and flat washers on the lower end of the bushing to release the four flexible straps.

2. Remove the three hexhead cap screws that secure the bushing clamps to the head casting. Lift the bushing assembly up through the head casting.

3. An aluminum clamping ring cushions the pressure between the bushing and bushing clamps. If it is in good condition, the ring can be reused. Twist the ring and slip it from the bushing.

4. The bushing assembly can be completely replaced, or new porcelain only may be installed. If new porcelain is used, unscrew the bushing terminal and pour out the oil from inside the bushing. Loosen the sealing plug and then draw the bushing lead rod out the lower end of the porcelain. Insert the rod all the way into the new porcelain and tighten the sealing plug. Slowly fill the bushing with transformer oil and then replace the bushing terminal, using a new *terminal* gasket.

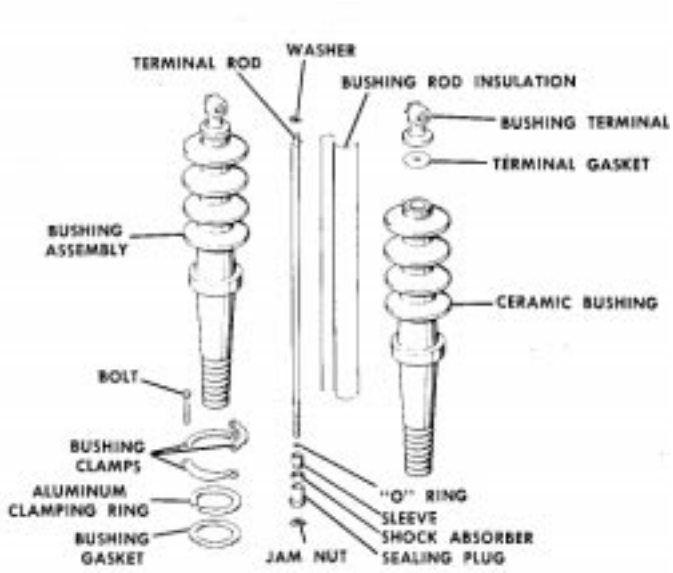

Figure 14
Bushing Replacement
Type RVE Recloser

5. Replace the bushing assembly, using a new gasket between the bushing and the head casting. When securing the bushing clamps, be sure to tighten the three bolts evenly a little at a time.

CAUTION: When reconnecting bushings position flexible leads at least 1/2 inch from any vertical insulating support, grounded part, or contact plunger rod.
On reclosers equipped with a ground-trip solenoid, also be sure one center phase lead clears the solenoid frame by 1/2 inch.

BUSHING - TYPE WVE RECLOSERS

Maintenance of bushings is generally limited to an occasional cleaning. If a bushing should become cracked or broken, replace the entire bushing assembly (Type WVE only) as follows:

1. Remove the hex nut, lock washer, and flat washers on the bushing to release flexible straps.

2. Remove the three hex-head cap-screws that secure the bushing assembly to the head casting and lift out the bushing assembly.

3. Replace the bushing assembly using a new gasket between the bushing and the head casting.

CAUTION: When reconnecting bushings, take care to position flexible leads at least 1/2 inch from any vertical insulating support stringer, grounded part, or the contact plunger rod in each phase. on reclosers equipped with a ground-trip solenoid, also be sure one center phase lead clears the solenoid frame by 1/2 inch.

SHOP MAINTENANCE - CONT'D

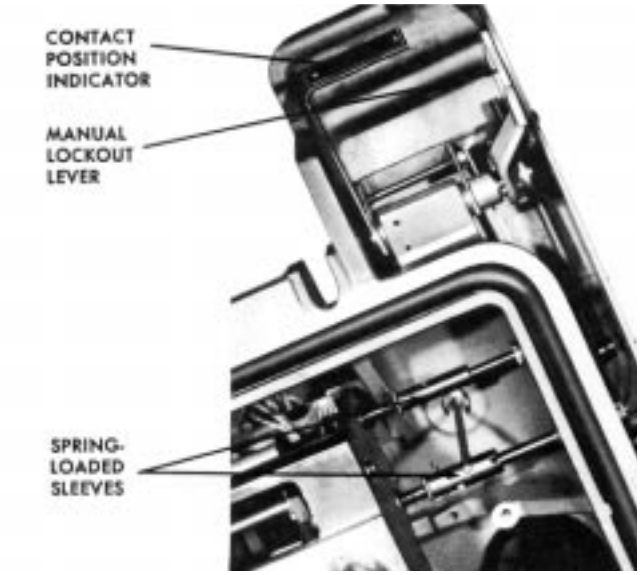

Figure 15
Spring-loaded sleeves of lockout lever and contact position indicator in engaged positions.

REMOVAL OF HEAD CASTING

Access to components located in or on the main frame such as the operating mechanism, mercury switches, trip solenoid, rotary solenoid, and internal wiring, is achieved by removing the head casting. Proceed as follows:

1. Disconnect all bushing leads at the lower end of the bushings.

2. Disengage the lockout lever and the contact position indicator by pushing the spring-loaded couplers inward. Refer to figure 15. Turn the couplers to lock them in the disengaged position.

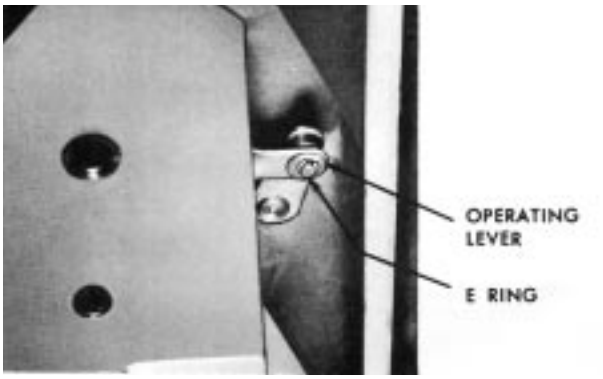

Figure 16
Auxiliary switch disconnection from operating lever before removal of head casting from operating mechanism.

3. If an auxiliary switch accessory is mounted on the recloser head casting, remove the E ring and washer, figure 16, to allow disconnection of the operating lever.

4. Remove the two screws that secure the 0.2-MFD capacitor to the load side of the recloser frame.

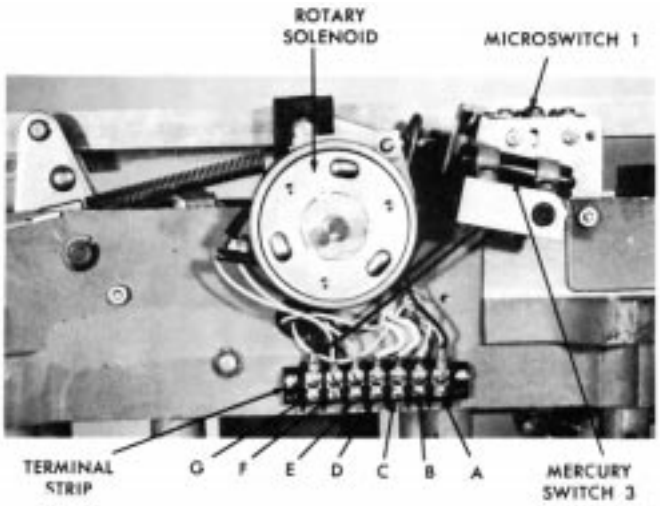

Figure 17
Terminal strip attached to recloser frame.

5. Disconnect the seven leads connected to the lower terminal strip of the terminal block attached to the recloser frame, figure 17. Be sure to label these seven leads corresponding to the terminals from which they are disconnected. Terminals are lettered A through G. *right to left.*

   Remove the screw that secures the nylon leadstrap to the frame above the terminal block.

6 Remove the six 1/2" x 4-1/2"hexsocket head bolts that secure the frame to the head casting. Be sure the recloser mechanism is supported from below before these bolts are removed. Six tubular spacers and lock washers will be released when the bolts are removed and the head is lifted from the recloser-mechanism frame. Figure 18 shows head casting and associated components removed from the mechanism frame.

7. To reassemble, carefully lower head casting in place with the six tubular spacers placed on the lugs. Start the six ton. bolts and tighten evenly to avoid any binding of the mechanism.

8. Engage the contact indicator and lockout lever. Reconnect the operating lever of the auxiliary switch if used.

9. Attach 0.2-MFD capacitor to the recloser frame. Reconnect bushing leads. Be sure bushing leads are positioned as described in the cautionary notes on Page 11.

10. Connect wiring from bushing CT's and cable receptacle to respective terminals on the terminal block. Attach nylon lead-strap to recloser frame.

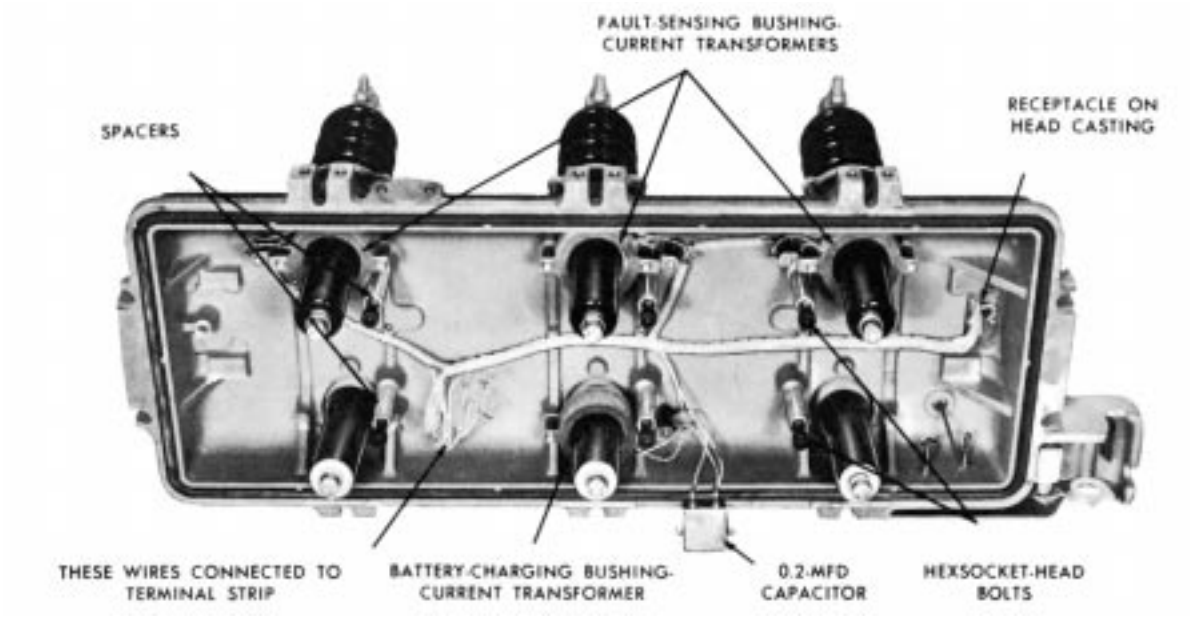

Figure 18
Head casting detached from operating mechanism. Hexsocket-head bolts have been attached to head casting for illustrative purposes

MECHANISM OPERATION

The head mechanism performs the actual opening and closing operations in response to signals from the electronic control. Contact opening is initiated by a trip coil. Contact closing is performed by the closing coil, mounted below the mechanism. The basic lever arrangement in the mechanism is shown here.

With the contacts closed, figure 19, the opening springs are fully extended. The trip coil push rod rests up against the toggle latch and when the trip coil is energized, the toggle opens, figure 20. The contact-and-toggle-support assembly and the contact-and-trip-arm assembly rotate on their shafts and begin to push the contacts open. As the opening springs rotate the contact-and-trip-arm assembly past this point, figure 21, the trip arm moves the reset trip lever, which releases the reset lever. The reset lever is rotated by a spring and snaps the toggle closed.

This motion of the reset lever also pulls the plunger out of the closing coil. At this point the contacts are completely open.

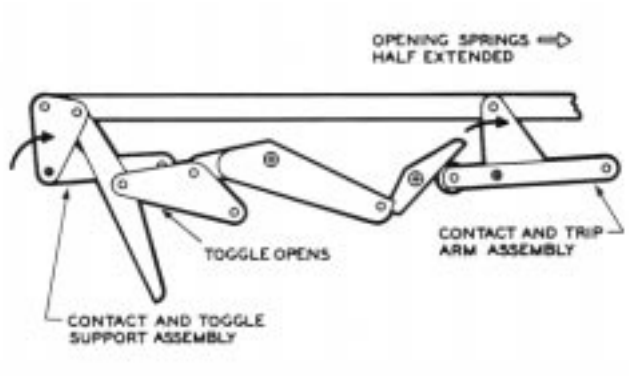

Figure 20
Contacts open halfway.

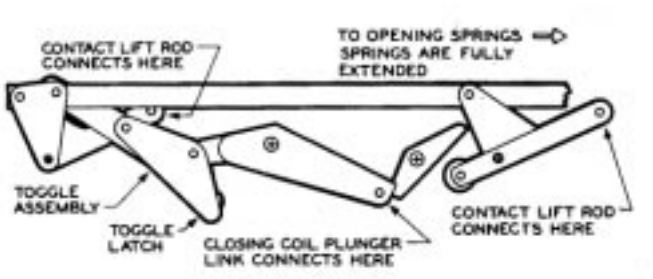

Figure 19
Contacts closed.

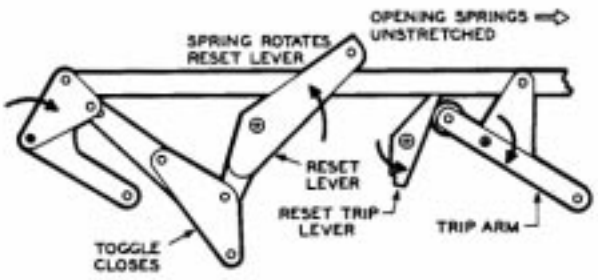

Figure 21
Contacts fully open.

ADJUSTMENTS - CONT'D

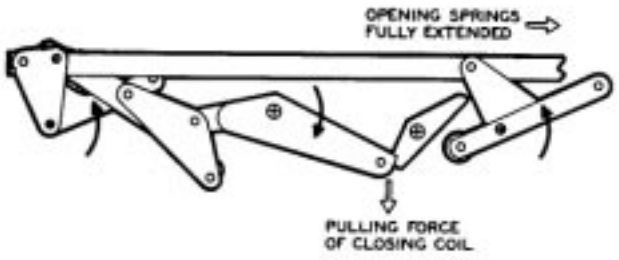

Figure 22
Contacts reclosed.

The closing coil is energized by a signal to the rotary solenoid on the side of the mechanism. The solenoid closes the closing solenoid contactor, which energizes the coil. The plunger is drawn into the coil and the reset lever is pulled back, figure 22, to its original position, at the same time closing the contacts. The mechanism is then ready for another cycle.

RATING CHANGES

The recloser's continuous current rating and minimum trip values can be changed in the field as described in the control installation manual. Closing solenoid coils are available for eight voltage ranges from 2.4 to 14.4 kv. Note that the voltage rating represents phase-to-grounded neutral voltage.

Two d-c coils rated at 125- and 250-volts dc also are available. When the closing solenoid coil is changed, as described ort page 9, the protective fuse may also require replacement. one fuse is shipped with each replacement coil. Fuse and coil data are given on pages 10 and 11.

ADJUSTMENTS

Refer to the control installation manual bulletin 281-27SA-1 for information about operations to lockout, reclosing time, phase-trip sequence, minimum-trip values, resetting time, ground-trip sequence, phase-trip timing and ground-trip timing.

CONTROL LEVER OVERTRAVEL ADJUSTMENT

Check for proper adjustment of the control lever by first removing the sleet hood cover to expose the control lever. From the OPEN position, slowly push the control lever toward the CLOSED position. As the lever is pushed up, latching of the recloser will be felt. At this point dimension a of figure 23 should be 1/4 inch.

If the control lever is not adjusted properly, open the C ring and remove it with diagonal cutters. Then slide the control lever from the shaft. Rotate the control lever clockwise to reduce dimension a or counterclockwise to increase dimension a. Reassemble by reversing the procedure when the correct clearance has been set.

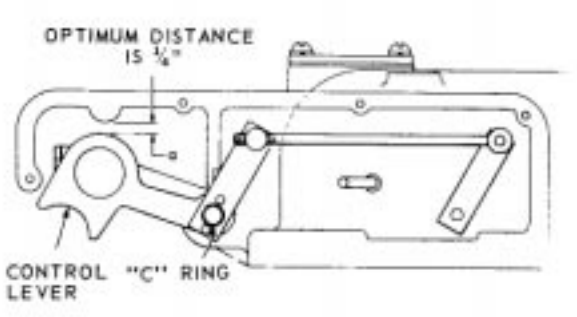

Figure 23
Overtravel adjustment of control lever.

OPERATIONAL CHECKS

Circuit components attached to the recloser cover, frame end operating mechanism require no maintenance and should provide trouble-free operation. However, if the recloser fails to operate properly, perform these steps:

1. Check out the control cable for continuity between pins,

2. Test the circuit components associated with the recloser mechanism as described below, and

3. Check the electronic control as described in the electronic control service manual, bulletin 281 - 27SB -1.

The recloser should be checked out in this order. An ohmmeter-voltmeter such as the Triplet Model M30, which provided reference values for the following tests, is the only equipment necessary for steps 1 and 2.

OPERATIONAL CHECKS - CONT'D

CONTROL CABLE

Remove the recloser from service as described on page 4 if not already disconnected. Then detach the control cable from the receptacles on the recloser cover and underside of the electronic control housing. With the ohmmeter, check for continuity between cable pins and pin sockets. Pins and pin sockets are identified on each cable end.

A zero reading indicates continuity; an infinite reading indicates an open circuit. If an open circuit is discovered, the cable can be reinstalled after the open-circuited lead is repaired or replaced. Continuity between unlike pins or sockets indicates a short circuit. Pins and sockets of the control cable designated N and P are not used.

CIRCUIT COMPONENTS

Refer to figures 17, 24, 25, 26, 27, and 30 for identification of microswitch 1, mercury switches 2 and 3, rotary solenoid, trip solenoid, bushing current transformers, terminal strip, and the configuration of pinsockets of the control-cable receptacle on the head casting. The components are checked out under the three following conditions:

1. Recloser *contacts* open and manual *control* lever *down*

   a. All measurements are made from the pin-sockets of the control-cable receptacle.

   b. Connect ohmmeter probes to sockets A and B. The ohmmeter should read approximately 9.5 ohms. If not, difficulty may be present in the trip solenoid.

      NOTE: Readings within ±15 percent of suggested readings are sufficient to indicate components are trouble free.

   c. Transfer ohmmeter probes to sockets E and F. Reading of 19 ohms indicates rotary solenoid should be trouble free.

   d. Insert ohmmeter common probe into socket K. Insert the positive probe into sockets G. H, then J. All three readings should be 7 ohms. If not, corresponding sensing current transformer may be faulty. Check bushing CT's for ratio and polarity as described in the test procedure on page 17.

   e. With ohmmeter common probe still inserted in socket K, insert positive probe into socket L. Ohmmeter should read 1000 ohms. If a reading of zero ohms is obtained, the 0.2-MFD capacitor may be short circuited. Readings deviating from 1000 ohms outside a 20 percent tolerance indicate damaged resistor or transformer winding.

   f. Transfer ohmmeter probes to sockets C and D. Infinite ohms should be read indicating microswitch 1 is open-circuited. If not, the mercury switch is faulty, but should be rechecked before replacing.

      NOTE: Mercury switch and microswitch positions for combinations of control-lever and recloser-contact positions are tabulated on page 17.

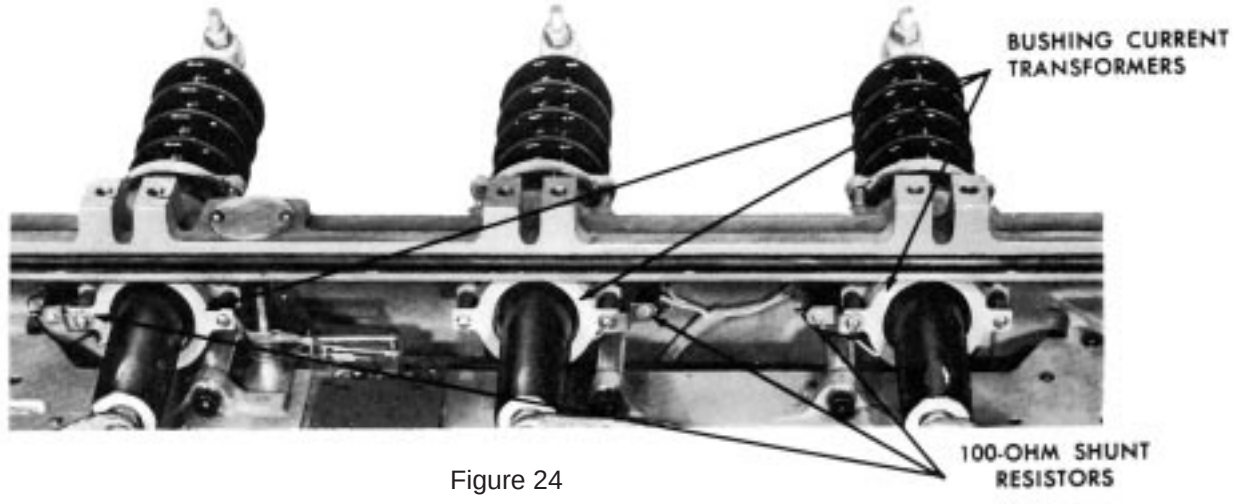

Figure 24

View of fault-sensing bushing current transformers located on source side of recloser. Battery-charging current transformer is located on center-phase loads ide bushing .

OPERATIONAL CHECKS - CONT'D

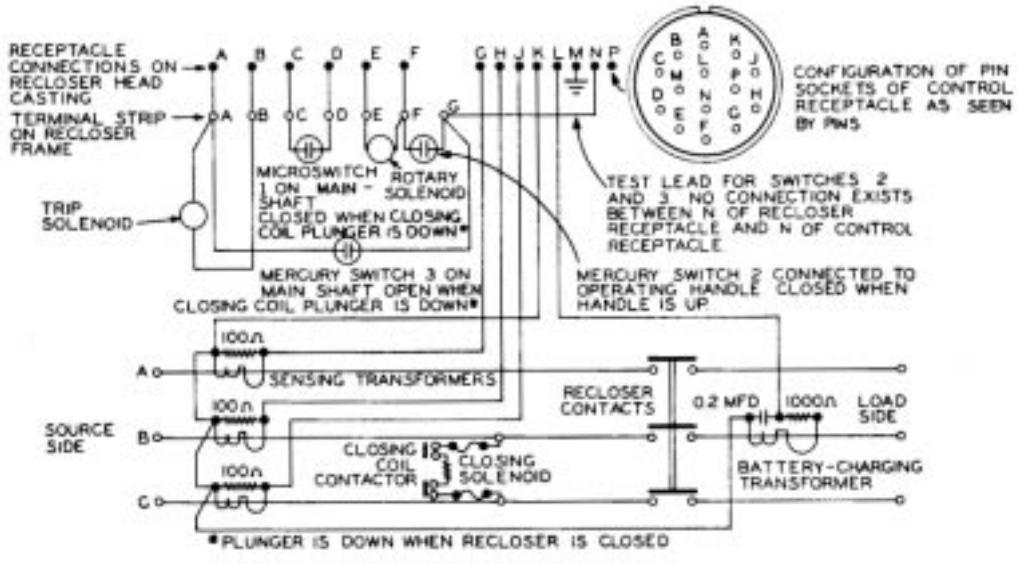

FIGURE 25

Internal wiring of electronic recloser. Terminals on recloser terminal strip are lettered right to left, A through G. Terminals on terminal strip in this diagram are lettered left to right, A through G. for explanatory purposes. Pin N of the control-cable receptacle is conneded to terminal G of the terminal strip on the recloser frame to facilitate testing of mercury switches 2 and 3.

g. Transfer ohmmeter probes to sockets F and A. The ohmmeter should read infinite ohms. If not, mercury switch 2 may be faulty. Individual checks on mercury switches 2 and 3 can be made by means of pin-sockets N, F, and A.

2. Recloser contacts open and manual *control lever up*

a. Repeat step f under condition 1. Microswitch 1 should still be open.

b. Transfer ohmmeter leads to sockets F and A. Ohmmeter should indicate closed circuit showing that mercury switch 3 has remained closed. Mercury switch 2 should be closed.

c. Remove ohmmeter probes from terminals F and A. Connect positive lead of the battery (or 25-volt station d-c source) to socket F. Momentarily connect the negative lead to socket E. Rotary solenoid should operate producing an easily distinguished sound. Repeat two or three times. Connect ohmmeter across source-side B and C phases; see figure 25 for identification of phases. The ohmmeter should show closing coil continuity (effective d-c resistance of coil when rotary solenoid is energized.) Disconnect d-c source.

NOTE: To check for d-c closing-coil continuity, read value across d-c terminals in junction box.

CAUTION: If the control battery is used as the 25-volt d-c test source, the battery should be connected only as long as is necessary for testing purposes. Lengthy connection across the rotary solenoid will create an excessive drain of energy from the battery, although it has no effect on the solenoid itself. If a station d-c source is used, it can remain connected to sockets E and F from step 2c through completion of testing.

3. Recloser contacts closed end manual *control* lever up

a. With 25-volt d-c source connected across sockets E and F, close the main recloser contacts with the KA90R closing tool, as described on page 6. Ohmmeter connected across B and C phases should show loss of continuity indicating that closing-solenoid contactor is open.

b. Transfer ohmmeter probes to terminals C and D. Zero ohms indicates that microswitch 1 is operative and closed. Remove KA9OR closing tool and ohmmeter leads from receptacle sockets.

c. Trip recloser by applying 25 volts dc across socket A (positive) and socket B (negative). If recloser contacts do not trip open, trip solenoid may be inoperative.

CAUTION: Recloser should be tripped in oil to avoid damage to the dashpot in the arc-interrupting mechanisms.

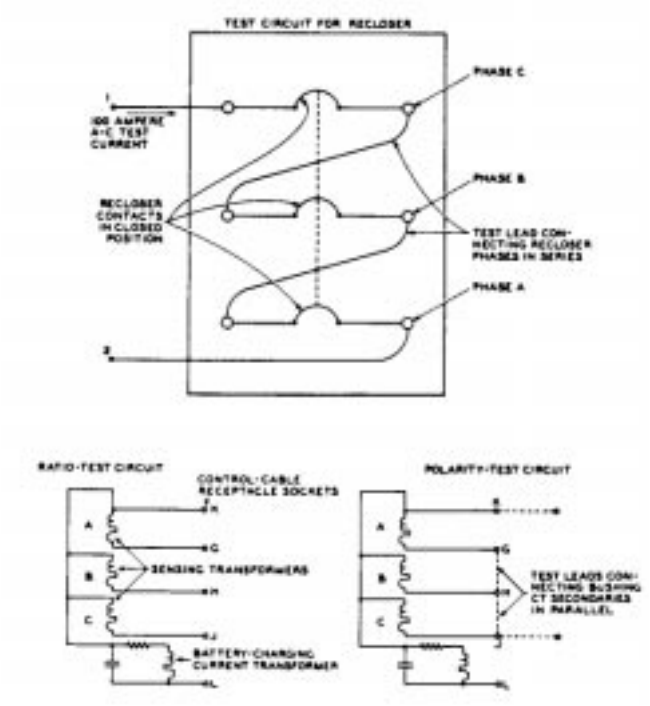

Figure 26
Test circuit for checking bushing current transformers. Ratio and polarity test-circuits shown are the effective circuits that contribute to the testing. Components not having an effect on the current flow ore not shown. Dotted lines in the polarity-test circuit are test leads.

TABLE 2

Recloser Contacts	Manual Control Lever	Micro-switch 1	Mercury Switch 2	Mercury Switch 3
OPEN	DOWN	OPEN	OPEN	CLOSED
OPEN	UP	OPEN	CLOSED	CLOSED
CLOSED	UP	CLOSED	CLOSED	OPEN

BUSHING CURRENT TRANSFORMER TESTS

The sensing transformers and battery-charging transformer can be tested using the circuits shown in figure 26. An a-c ammeter possessing a 0 to 500 milliampere range is required.

Assemble the test circuit as shown in the top drawing of figure 26. Connect the phases in series and close the recloser contacts with KA90R closing tool as described on page 6. Connect a 100-ampere a-c test current supply to points 1 and 2.

CAUTION: Never use the KA90R manual closing tool on an energized recloser.

Ratio Test for Sensing Current Transformers

1. Energize 100-ampere test source.

2. Check current through control-cable receptacle sockets K-G, K-H, and K-J as identified in figure 25. For each sensing bushing CT checked, the milliammeter should indicate 100 milliamperes, ± 10 percent. BE SURE TO ALLOW FOR TOLERANCES OF METERING EQUIPMENT. The resistance of certain types of meters is not negligible. It may be necessary to use the 0-500 milliampere scale, with its lower resistance, rather than the 0-100 milliampere scale.
3. A 100-ma reading verifies the 1000:1 ratio of the current transformer. If 100-ma is not achieved, bushing CT can be suspected as faulty; but polarity test should be performed. De-energize test source.

Polarity Test for Sensing Current Transformers

1. Connect sockets G. H. and J of the control-cable receptacle in series with jumper leads as indicated in figure 26. The jumper leads connect the secondaries of the current transformers in parallel so that total output current, measured at points K and J. should be 300 ma.

2. Energize a-c test current. Check for 300-ma reading at sockets K and J. Results can indicate either (a) all three bushing current transformers have the same polarity — 300-ma reading, or (b) one bushing current transformer has polarity opposite remaining two—100-ma reading. Should one transformer possess opposite polarity, be sure to refer to the circuit of figure 25 as a guide during further trouble shooting.

3. De-energize a-c test current and remove jumper wires from receptacle sockets.

Output Test for Battery-charging Current Transformer

1. Energize 100-ampere a-c test current.

2. Measure current at sockets K and L of receptacle. Value should fall between 40 and 60 milliamperes.

3. Readings within this range indicate sufficient current to maintain the control battery at the optimum voltage level.

OPERATIONAL CHECKS - CONT'D

REPLACEMENT INSTRUCTIONS FOR CIRCUIT COMPONENTS

All circuit components associated with the recloser frame, head casting and operating mechanism except the trip solenoid, rotary solenoid, microswitch 1 and mercury switch 2 can be replaced without detaching the recloser mechanism from the head casting. Instructions for replacing bushing CT's, mercury switch 3, and the 0.2-MFD capacitor are given first.

A 100-watt soldering iron will meet all requirements for repair work. When resoldering lead connections, use only resin core solder. M-E will assume no responsibility for components having leads connected by means of acid core solder.

0.2-MFD Capacitor

Label lead connections to the capacitor and proceed as follows:

1. Heat solder joints to disconnect leads.

2. Remove two screws that secure capacitor to recloser frame.

3. Replace by reversing above procedure. Be sure to reconnect leads to proper capacitor terminals.

Battery-Charging Current Transformer

Label lead connections to the current transformer and shunting resistor. Then proceed as follows:

1. With diagonal cutters, clip the leads close to the current transformer.

2. Disconnect the flexible bushing lead.

3. Remove the two screws that secure the current transformer to the head casting. Bushing CT is now free to be removed.

4. Replace current transformer by reversing the above procedure. Be sure to use spacers between the transformer mounting supports. Replacement transformers are equipped with six-inch leads which can be trimmed as required. When splicing connections, be sure the proper leads are connected before soldering. Be sure to wrap all splices with electrical tape and observe soldering precautions recommended above.

Sensing Bushing-Current Transformers

Replacement of phase A, phase B, and phase C current transformers is identical. These transformers are installed as described above under battery-charging transformer instructions.

Mercury Switch 3

Refer to figure 17. Disconnect leads from terminals A and G and proceed as follows:

1. Loosen two screws that secure nylon mounting straps to lever pinned to main reclosing shaft.

2. Slip mercury switch from mounting straps when screws are loosened sufficiently.

3. Be sure to replace mercury switch so that lead wires are furthest from the rotary solenoid. If the end without lead wires is not nearest the rotary solenoid, improper operation of the recloser mechanism will result.

Remove Head Casting for Remaining Components

To replace the following components — trip solenoid, microswitch 1, mercury switch 2 and rotary solenoid - the recloser mechanism must be removed from the head casting, as described on page 12.

Mercury Switch 2

Refer to figure 27 and install new switch as follows:

1. Disconnect the leads of the mercury switch from the terminal strip terminals F and G.

2. Remove the four nylon mounting straps that secure the sleeving to the recloser frame.

3. Remove the faulty switch from its mounting straps. With an offset screwdriver, loosen the screws that secure the nylon straps to manual-lockout shaft lever to allow removal of switch 2.

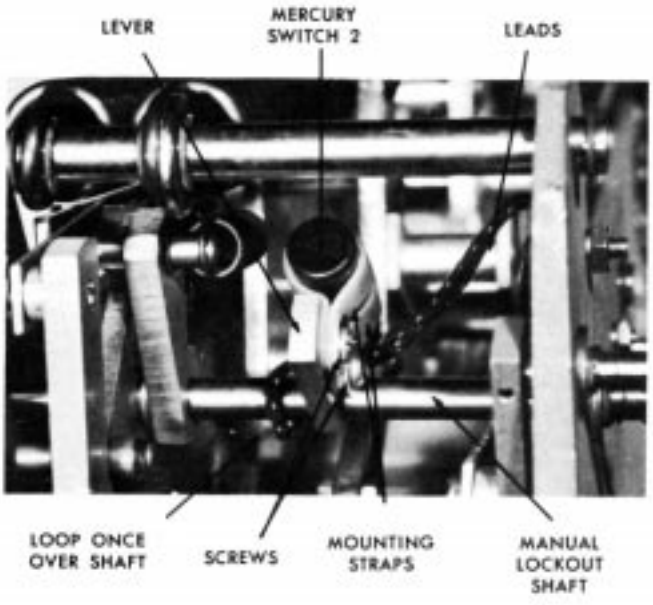

Figure 27
Location of mercury switch 2.

4. Pull the leads through the protective sleeving. Thread the leads of the new mercury switch through the sleeving. Thread both leads at the same time. Leads can be secured to a long wire which can draw the mercury switch leads through the sleeving.

   NOTE: Switch leads need only be connected between the proper terminals for correct operation. Reversing leads between switch terminals has no effect on recloser operation.

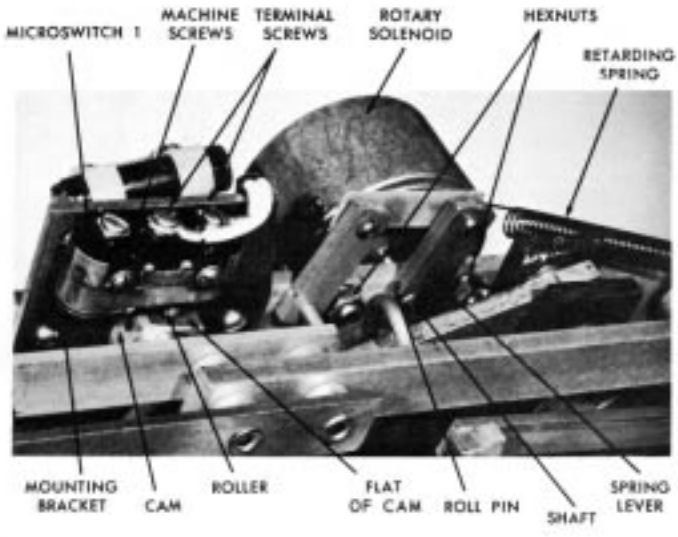

Figure 28
Properly installed microswitch 1.

5. Pass sleeving through mounting straps and tighten to secure sleeving. Connect switch leads to proper terminals. Position switch as shown in figure 27 and secure mounting straps to lever. If switch is positioned opposite to that illustrated in figure 27, the recloser will operate improperly.

Microswitch 1

Refer to figure 28 and proceed as follows:

1. Disconnect the two white leads from the top of the microswitch.

2. Remove two round-head machine screws to release microswitch from mounting bracket. A hexnut an washer will be released from the threaded end of the screw.

3. Attach new microswitch to mounting bracket. Adjust microswitch so that roller lever stop just touches base of switch when roller rides on cam. When roller is off cam, it should just clear flat of cam as shown in figure 28. Tighten machine screws.

4. Reconnect leads to two terminals nearest rotary solenoid as shown.

Rotary Solenoid

Refer to figures 17, 28, and 29 and proceed as follows to replace the rotary solenoid:

1. Drive out the roll pin that secures the spring lever to the rotary-solenoid shaft. Detach retarding spring from cotter pin.

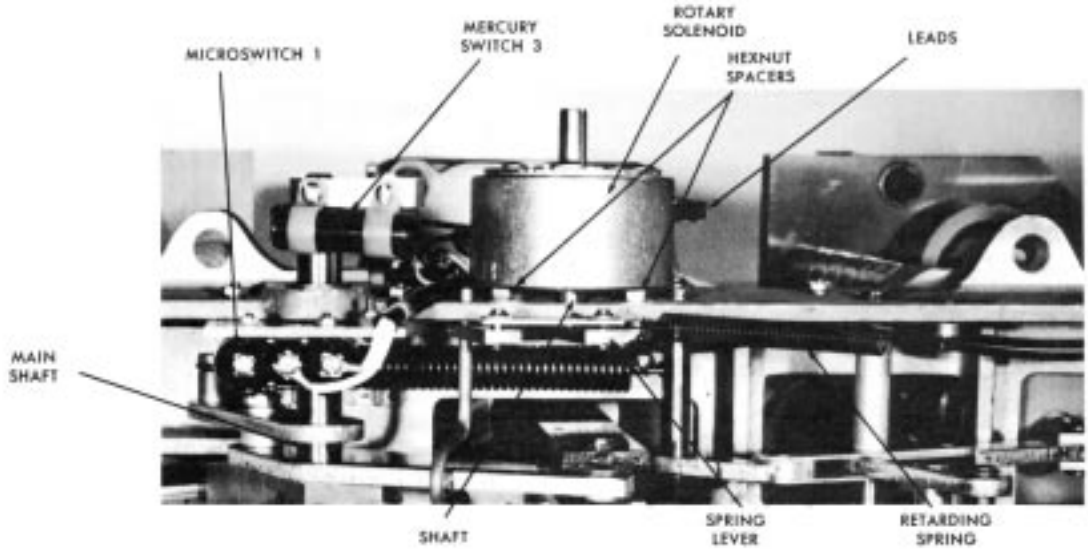

Figure 29
Top view of rotary solenoid and associated components.

OPERATIONAL CHECKS- CONT'D

2. Remove hexnuts and lock washers that secure the rotary solenoid to the recloser frame. Disconnect solenoid leads from the terminal block and remove rotary solenoid.

3. Remove hexnut spacers and washers from rotary solenoid mounting studs and attach to new solenoid. Install new rotary solenoid by reversing the foregoing procedure. Be sure solenoid leads are connected to correct terminals. Refer to figures 17 and 25.

Trip Solenoid

The trip solenoid, figure 30, is replaced as follows:

1. Disconnect leads from terminals A and B of the terminal block.

2. Loosen the hexnut that secures the nylon mounting strap to allow lead sleeving to slip through freely.

3. Remove two socket-head set screws that secure the trip solenoid to the mounting bracket. Detach trip solenoid from bracket. Two lock washers will be released.

4. Install new solenoid by reversing above procedure. Pass leads through nylon mounting strap and grommet in mechanism frame. Connect leads to terminals A and B of the terminal strip in any order. The trip solenoid is not polarity sensitive.

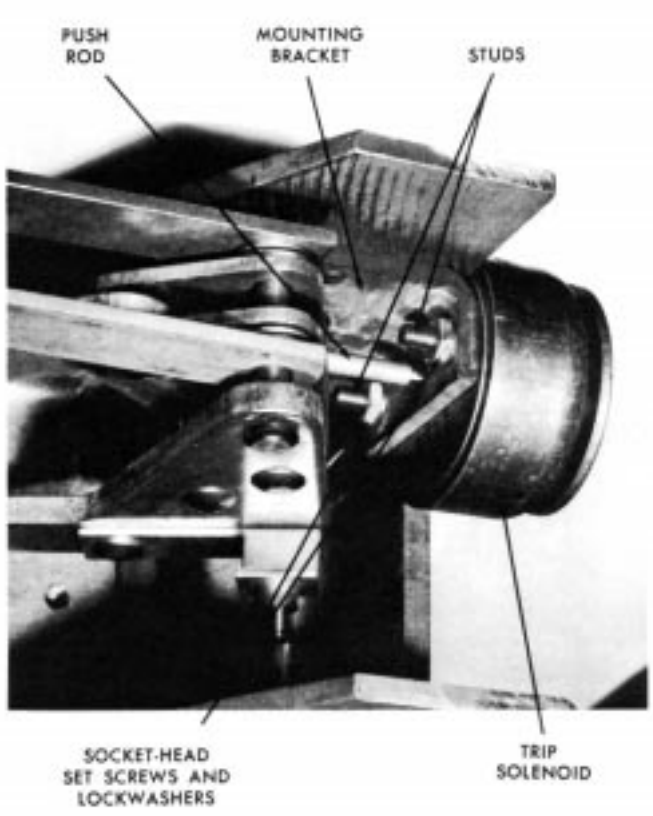

Figure 30
Properly installed trip solenoid

PARTS ORDERING

When ordering replacement parts always include the recloser type and serial number in the ordering information. With Cooper Power System's continuous improvement policy there will be some cases where parts ordered may not be exactly the same as parts furnished. All parts ordered, however, including those of an advanced design, have the same warranty as any whole item of switchgear; i.e., against defects in material or workmanship within a period of One year from date of shipment.

PARTS LIST - TYPE RVE AND WVE RECLOSERS

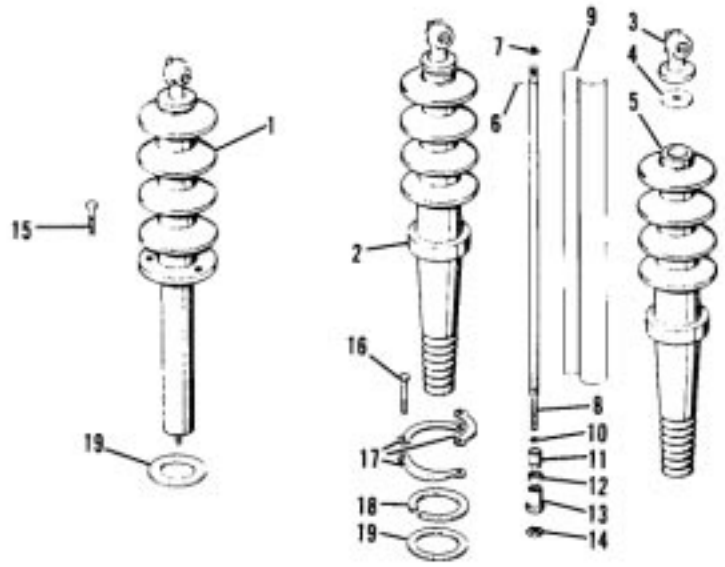

Item No.	Description	Catalog Number	Quantity Per Recloser
1*	Bushing assembly, standard Type WVE Recloser	**KA27RV2**	6
	Bushing assembly, standard C.T., Type WVE Recloser	**KA27RV6**	6
	Bushing assembly, 26-1/2” creepage, Type WVE Recloser	**KA27RV4**	6
	Bushing assembly, 26-1/2” creepage, C.T., Type WVE Recloser	**KA27RV8**	6
2	Bushing assembly, standard, Type RVE Recloser	**KA28RV**	6
	Bushing assembly, standard C.T., Type RVE Recloser	**KA29RV**	6
	Bushing assembly, 26-1/2” creepage, Type RVE Recloser	**KA17RV**	6
	Bushing assembly, 26-1/2” creepage, C.T., Type RVE Recloser	**KA22RV**	6
3	Bushing terminal - Type RVE Recloser	**KA329R**	6
4	Gasket, upper bushing - Type RVE Recloser	**KP120L**	6
5	Ceramic, bushing, standard Type RVE Recloser	**KP541RV**	6
	Ceramic, bushing, standard C.T., Type RVE Recloser	**KP542RV**	6
	Ceramic, bushing, 26-1/2” creepage, Type RVE Recloser	**KP534RV**	6
	Ceramic, bushing, 26-1/2” creepage, C.T., Type RVE Recloser	**KP539RV**	6
6	Roll pin, 1/8"' x 7/8" lg., Type RVE Recloser	**KP517**	6

*WVE bushing assemblies cannot be dismantled and must be replaced as complete assemblies.

Item No.	Description	Catalog Number	Quantity Per Recloser
7	Washer, Type RVE Recloser	**KP1071R**	6
8	Terminal rod, standard, Type RVE Recloser	**KP511A1**	6
	Terminal rod, standard C.T. Type RVE Recloser	**KP511A5**	6
	Terminal rod, 26-1/2"creepage, Type RVE Recloser	**KP511A2**	6
	Terminal rod, 26-1/2” creepage, C.T., Type RVE Recloser	**KP511A4**	6
9	Bushing rod insulation, Type RVE Recloser Secure with gummed tape 0.005” X 3/4” X 9”	**KP509RV**	6
10	“O” Ring, Type RVE Recloser	**KP2000A18**	6
11	Sleeve, Type RVE Recloser	**KP537RV**	6
12	Shock absorber, Type RVE Recloser	**KP1257R**	6
13	Sealing plug, Type RVE Recloser	**KP507RV**	6
14	Jam nut, brass, hex 1/2"-20NF2, Type RVE Recloser	**KP291**	6
15	Mach. bolt, 3/8”-16UNC2 x 1", sstl. hex hd.	**KP738**	18
16	Mach. bolt 3/8”-16UNC2 x 2" sstl. hex hd.	**KP763**	18
17	Bushing clamp	**KP1109R**	18
18	Bushing clamping ring aluminum	**KP1111R**	6
19	Lower bushing gasket	**KP1112R**	6

PARTS LIST - TYPE RVE AND WVE RECLOSER

(Tank and Cover Assemblies)

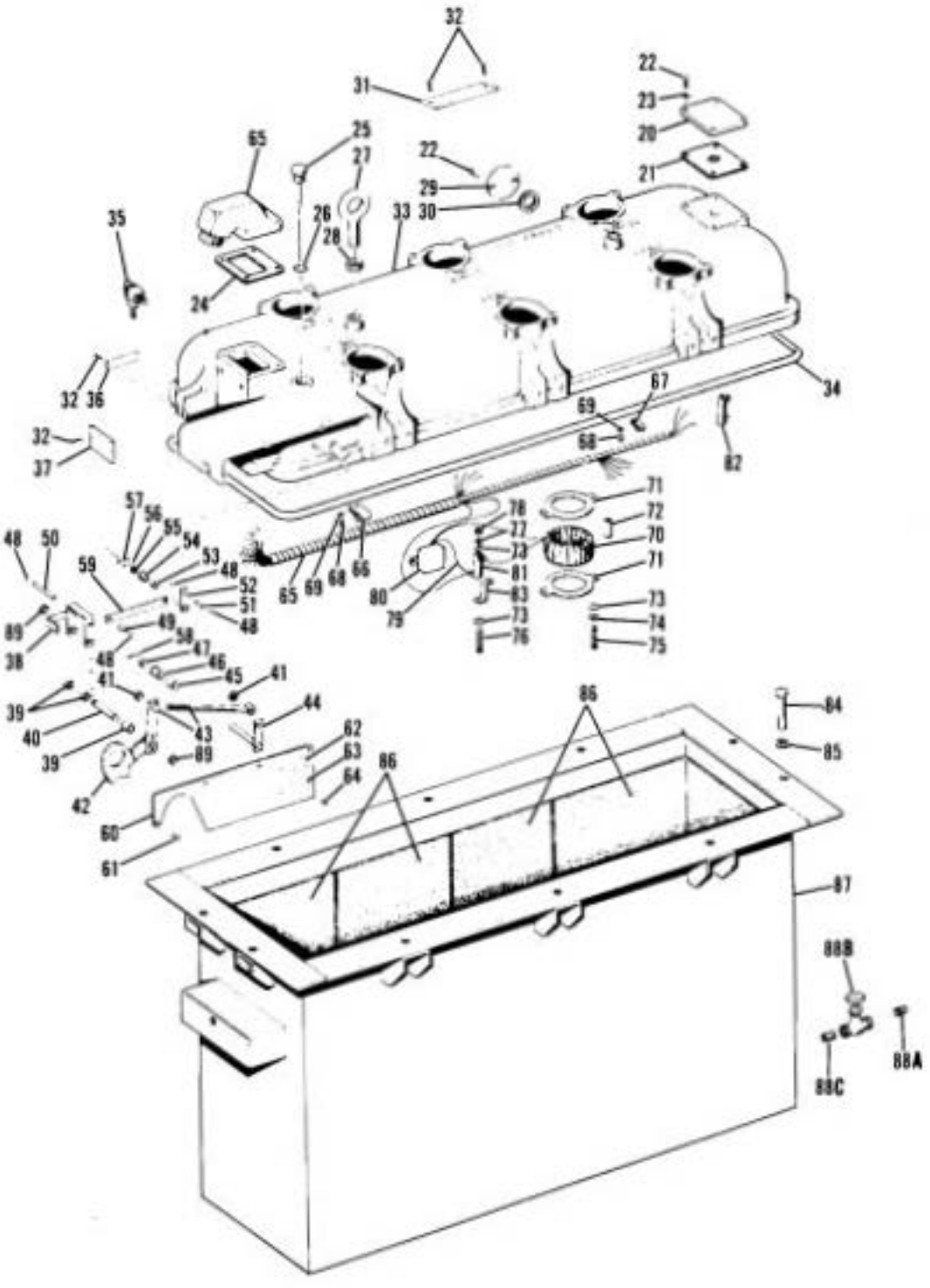

PARTS LIST - TYPE RVE AND WVE RECLOSERS

Item No.	Description	Catalog Number	Quantity Per Recloser
20	Cover plate	**KP609R**	1
21	Mounting gasket far auxiliary switch	**KP610R**	1
22	Mach. screw, 1/4” -20UNC2 x 5/8”, sstl. rd. hd.	**KP613**	10
23	Lock washer, 1/4"-20UNC2	**KP563**	8
24	Terminal box gasket	**KP611R**	1
25	Oil level dipstick	**KA363R**	1
26	O-ring gasket	**KP2000A9**	1
27	Lifting eyebolt	**KP1104R**	2
28	Palnut 5/8” -11UNC2, galv.	**KP2064A7**	2
29	Closing-tool port cover	**KP246R**	1
30	Port-cover plate gasket	**KP247R**	1
31	Plate, closing call	**KP1225R**	1
32	Self tapping screw, #2 x 3/16”, sstl.	**KP69**	8
33	Head casting (includes control shaft bushings, items 46 and 54)	**KA1603R1**	1
34	Head gasket	**KP120R**	1
35	Ground connector	**KA392R**	1
36	Plate, serial number	**KP110GS**	1
37	Plate, ground instruction	**KP611D**	1
38	Indicator and support assembly	**KA19RE**	1
39	Spacer	**KP3013A11**	3
40	Groove pin	**KP3126A4**	1
41	Retaining ring, WA514	**KP75**	1
42	Lockout handle assembly	**KA621R**	1
43	Link rod and pin assembly	**KA314R**	1
44	Handle lever assembly	**KA320R**	1
45	Spacer	**KP3010A6**	1
46	Handle shaft bearing (included with item 33)	**KP259R**	1
47	Retaining Ring, WA516	**KP76**	1
48	Retaining Ring, WA510	**KP72**	4
49	Spacer	**KP3006A9**	1
50	Groove pin	**KP3123A12**	1
51	Groove pin	**KP3123A3**	1
52	Shaft and lever assembly	**KA319R**	1
53	Spacer	**KP3007A8**	1
54	Shaft bearing (included with item 33)	**KP1055R**	1
55	Washer, 9/16" x 0.260" x 0.040", brass	**KP399**	1
56	Cottter pin, 3/31” X 1/2”, brass	**KP302**	1
57	Roll pin, 1/32” X 1/2”	**KP504**	1
58	Roll pin, 1/8” X 3/4”	**KP502**	1
59	Link	**KP137RE**	1
60	Sleet hood cover plate	**KP283R**	1
61	Self-tapping screw No. 12 x 1/2”, sstl.	**KP50**	5
62	Serial number nameplate, RVE Serial number nameplate, WVE	**KP1RVE** **KP101WVE**	1 1
63	Voltage rating nameplate, a-c coils, add correct number: 3 - 7.2 to 8.32 kv; 4 - 12.0 to 13.8 kv; 5 - 14.4 kv; 7 - 11.0 kv (Item 63 is also included with Item 102) Voltage rating nameplate, d-c coils, add de coil rating to serial number (Item 63 is also included with Item 102)	**KP567R_____** **KP1368R_____**	1 1
64	Self-tapping screw, No. 4 x 3/16”, sstl.	**KP21**	8
65	Receptacle wiring duct assembly	**KA33RE1**	1
66	Cable clamp	**KP2006A2**	4
67	Cable clamp	**KP2006A1**	2
68	Machine screw, #8-32UNC x 5/16”, lg. rd. hd. stl. cad. pl.	**KP678**	6
69	Lockwasher, #10 med. sstl.	**KP994**	6
70	Current transformers	**KP144RE**	4
71	Support, current transformers	**KP145RE**	8
72	Spacer	**KP3009A38**	8
73	Washer,#14S, plain, brass	**KP339**	16
74	Lockwasher, 18-8, 1/4" x 0.109" x 0.062"', sstl.	**KP563**	8
75	Cap screw, 14”.20NC2 x 2-1/4”, lg. hex hd. stl. cad. pl.	**KP798**	8
76	Machine screw, #10-24NC2 x 2-1/2” lg. rd. hd. stl. cad. pl.	**KP668**	4
77	Lackwasher, #10 med.	**KP564**	4
78	Mach. screw nut, #10-24NC2 hex cad.	**KP272**	4
79	Lead wire	**KP5339A1050**	2
80	Capacitor, #23355, 0.2 MFD Potter Co. 2500 VDCW		1
81	Resistor, 1K, 25W	**KP4022A36**	1
82	Resistor, 100 ohm, 25W	**KP4022A31**	3
83	Terminal bracket	**KP96GS**	4
84	Cap screw, 1/2"-13NC2 x 3-1/4", electro zn and iridite pl. hex hd. stl.	**KP752**	10
85	Washer, wrought galv.	**KP2028A23**	10
86	Tank liner kit	**KA867R**	1
87	Tank assembly	**KA88W**	1
88A	Pipe plug, 1/2", solid sq. hd. brass	**KP2007A3**	1
88B	Gate valve, 100 lb.-1/2", brass, optional	**KA809R**	1
88C	Close nipple (included with item 88B)	**KP2039A1**	1
89	Retaining ring,WA518, stl.	**KP79**	4

PARTS LIST -TYPE RVE AND WVE RECLOSERS

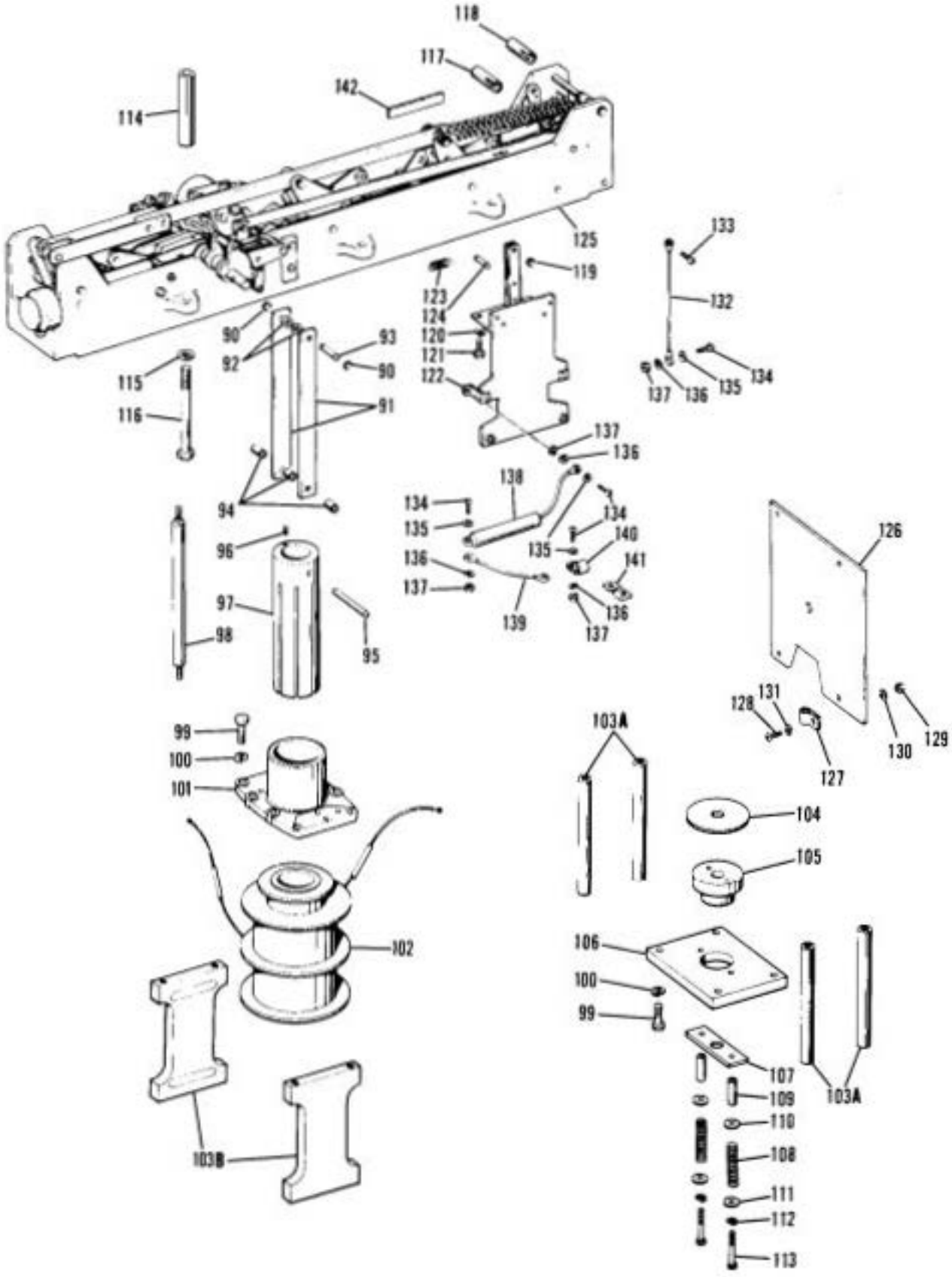

PARTS LIST -TYPE RVE AND WVE RECLOSERS

Item No.	Description	Catalog Number	Quantity Per Recloser
90	Retaining ring, WA518	**KP79**	2
91	Insulating link for closing plunger	**KP103R**	2
92	SAE washer 13/16", x 13/32" x 0.062"', zinc pl.	**KP1102**	2
93	Plunger link pin	**KP3126A2**	1
94	Spacer for plunger link	**KP3010A1**	3
95	Plunger link pin	**KP113R**	1
96	Set screw, No. 10-32 x 1/4" pin lock	**KP394**	1
97	Closing plunger	**KP104R**	1
98	Insulating spacer	**KA62R**	13
99	Cap screw, 3/8"-16UNC2 x 1-1/2", stl. hex hd.	**KP419**	8
100	Lockwasher, 3/8" med. steel	**KP556**	4
101	Upper solenoid frame	**KP100R2**	1
102	Closing coil and fuse kit - 60 cycle, add correct number: 3 - 7.2 to 8.32 kv; 4 - 12.0 to 13.8 kv; 5 - 14.4 kv, 7 - 125 v dc; 8 - 250 v dc; 9 - 11.0 kv.	**KA834R** _____	1
	Closing coil and fuse kit - 50 cycle, add correct number: 3 - 7.2 to 8.32 kv; 4 - 12.0 to 13.8 kv; 5 - 14.4 kv; 9 - 11.0 kv	**KA861R** _____	1
	Closing coil and fuse kit - 40 cycle, add correct number: 4 - 12.0 to 13.8 kv; 5 - 14.4 kv.	**KA860R** _____	1
103A	Rod, solenoid frame	**KP1669R**	4
103B	Solenoid frame shoe (Alternate for 103A)	**KP102R**	2
104	Fiber stop (also included with item 102)	**KP106R**	1
105	Closing plunger stop	**KP1667R**	1
106	Bridge plate	**KP1668R**	1
107	Plate	**KP1587R1**	1
108	Spring valve lift	**KP563R**	2
109	Spacer	**KP3009A6**	2
110	Washer,1/2" AN light,stl.	**KP1103**	1
111	Washer, #14L, brass	**KP818**	2
112	Lockwasher, 1/4", med.	**KP337**	2
113	Cap screw 1/4"-20UNC2 x 2-1/4" stl. hex hd.	**KP751**	2
114	Head-to-frame spacer	**KP227R1**	6
115	Lockwasher, 1/2" med. stl. zn pl.	**KP1107**	6
116	Socket cap screw, 1/2"-13UNC2 x 4-1/2, stl. hex (black oxide finish or equivalent)	**KP2036A3**	6
117	Quick-release control lever coupler	**KP1177R**	1
118	Quick-release counter shaft coupler	**KP1056R**	1
119	Retaining ring, WA514, stl.	**KP75**	7
120	Lockwasher 1/4" X 0.109" x 0.062", stl.	**KP337**	3
121	Cap screw, 1/4"-2OUNC2 x 3/4", stl. hex hd.	**KP735**	3
122	Closing solenoid contactor kit	**KA852R**	1
123	Contact toggle spring	**KP141R**	2
124	Contactor link pin	**KP1306R**	1
125	Mechanism frame assembly (see parts list page 28)	**KA68RE**	1
126	Shield	**KP531RV**	1
127	Conduit strap, 3/4", Graybar #1277		
128	Screw, # 10-24UNC2A x 5/8", lg., rd. hd., stl.	**KP1041**	4
129	Stop nut, elastic	**KP2020A13**	4
130	Washer, #10 SAE,stl.	**KP1115**	4
131	Washer	**KP753R**	4
132	Wire Assembly	**KA28W2**	1
133	Screw, self-tapping, #10 x 3/8", sstl.	**KP52**	1
134	Machine screw 1/4"-20UNC2 x 1/2" brass, rd. hd.	**KP473**	4
135	Washer, #14L, plain, brass	**KP818**	4
136	Lockwasher, 1/4" med., phos. buzz	**KP347**	4
137	Machine screw nut 1/4"-20UNC2, brass hex	**KP274**	4
138	Closing coil fuse assembly Add number to indicate voltage rating: 3 - 12.0 to 14.4 kv (color band one red) 4 - 2.4 kv (color band two red)	**KA259R** _____	1
139	Fuse wire jumper assembly	**KA28W1**	1
140	Fuse bracket (included with item #138)	**KP714R**	1
141	Fuse terminal bracket	**KP257L**	1
142	Non-reclosing shaft link	**KA25R**	1

PARTS LIST FOR INTERRUPTING MECHANISM
TYPE RVE RECLOSER ONLY
SEE PAGE 27 FOR WVE PARTS LIST

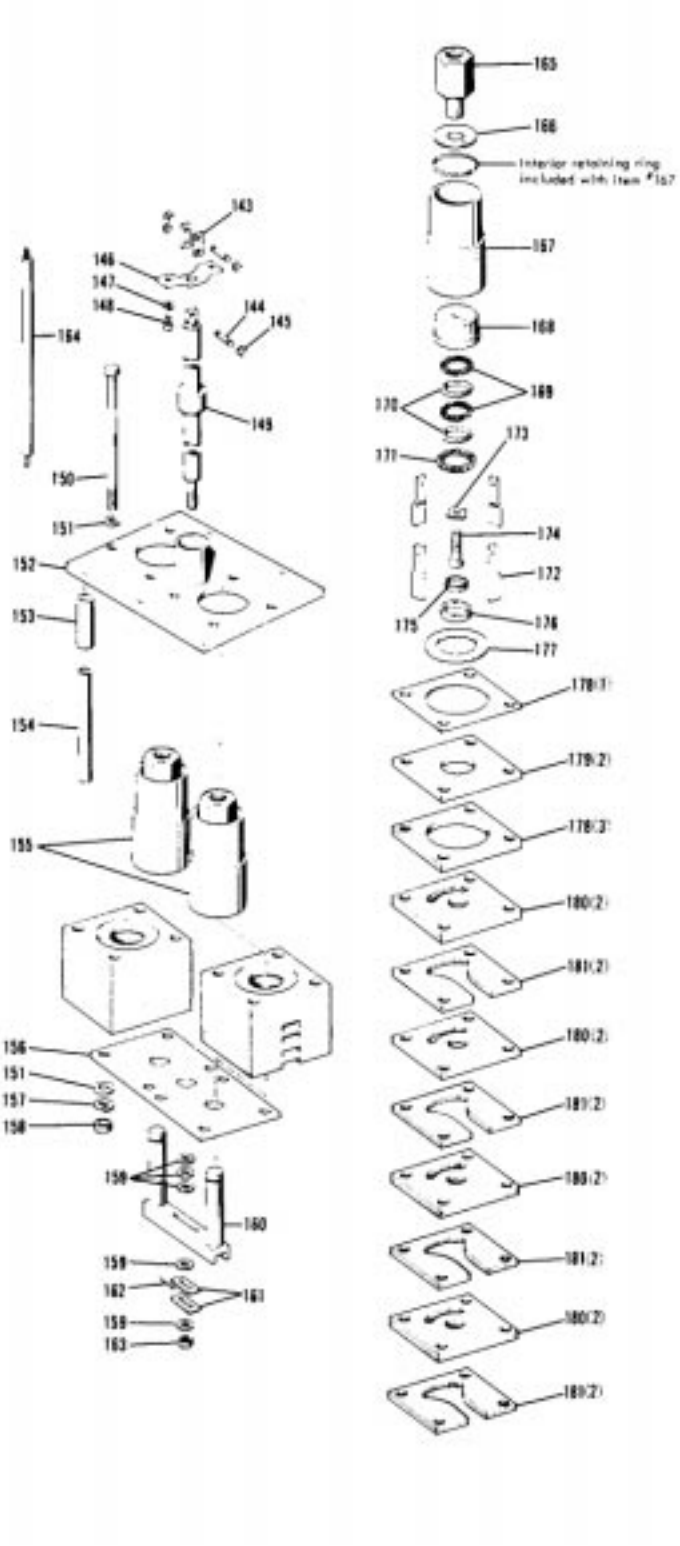

Item No.	Description	Catalog Number	Quantity Per Recloser
143	Lift rod link	**KP167R**	6
144	Groove pin	**KP3125A2**	6
145	Retaining ring, WA516	**KP76**	12
146	Guide, contact rod	**KP518RV1**	3
147	Lock washer, 1/4” med.	**KPl040**	6
148	Screw, rd. hd., stl., 1/4"-20UNC2A x 1/2”	**KP837**	6
149	Contact rod assembly, phases A and B	**KA6RV1**	2
	Contact rod assembly, phase C	**KA6RV2**	1
150	Cap screw, stl., 3/8"-16UNC2A x 6-1/2”	**KP1Q72**	24
151	Washer, 13/32” x 13/16" x 0.062",	**KP8O7**	48
152	Contact frame assembly, phases A and B	**KA3RV1**	2
	Contact frame assembly phase C	**KA3RV2**	1
153	Spacer	**KP3013A40**	24
154	Spacer	**KP3008A9**	24
155	Contact housing assembly	**KA11RV**	6
156	Bottom plate	**KP524RV**	3
157	Lockwasher, 3/8”, med.	**KP1108**	24
158	Hex nut, stl., 3/8”-16UNC2B	**KP276**	24
159	Washer, 5/16” SAE flat, stl.	**KP350**	15
160	Contact yoke assembly	**KA16VLR**	3
161	Spacer	**KP1505R**	6
162	Rail pin, 1/8” X 13/16”	**KP506**	3
163	Stop nut, elastic	**KP2020A2**	3
164	Insulating spacer	**KA62R**	13
165	Contact nut	**KP513RV**	6
166	Washer, retaining	**KP515RV1**	6
167	Fiber tube (includes retaining ring)	**KP512RV**	6
168	Contact cup	**KP514RV**	6
169	Contact spring	**KP1519R**	12
170	Spring spacer	**KP1513R**	12
171	Garter spring	**KP1520R**	6
172	Contact arm assembly	**KA539R**	24
173	Contact retainer	**KP1514R**	6
174	Cap screw, fillister hd.	**KP1694R**	6
175	Ring	**KP3014A4**	6
176	Shock absorber	**KP1257R**	6
177	Gasket	**KP136W**	6
178	Plate	**KP1293M**	24
179	Plate	**KP213W**	12
180	Plate	**KP521RV**	48
181	Plate	**KP523RV**	48

PARTS LIST FOR INTERRUPTING MECHANISM TYPE WVE RECLOSER ONLY

SEE PAGE 26 FOR RVE PARTS LIST

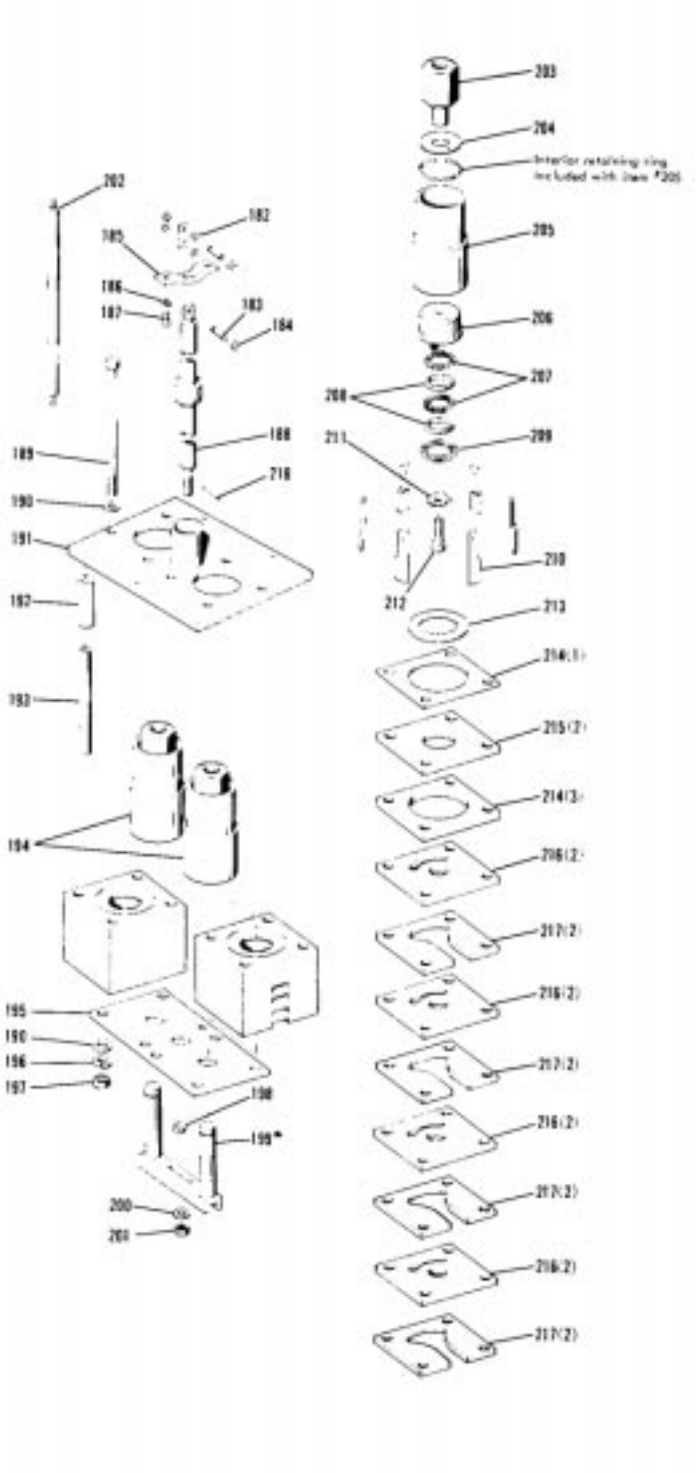

Item No.	Description	Catalog Number	Quantity Per Recloser
182	Lift rod link	**KP167R**	6
183	Groove pin	**KP3125A2**	6
184	Retaining ring, WAS16	**KP76**	12
185	Guide, contact rod	**KP518RV1**	3
186	Lockwasher, 1/4" med.	**KP1040**	6
187	Screw, rd-hd, stl., 1/4" 20UNC 2A x 1/2"	**KP837**	6
188	Contact rod assembly, phases	**KA95W2**	2
	Contact rod assembly, phase C	**KA94W2**	1
189	Cap screw, stl., 3/8"- 16UNC2A x 6”	**KP1068**	24
190	Washer, 3/8”, SAE, stl.	**KP1112**	48
191	Contact frame assembly phases A and B	**KA127W**	2
	Contact frame assembly,	**KA128W**	1
192	Spacer	**KP3013A40**	24
193	Spacer	**KP3008A23**	24
194	Contact housing assembly	**KA125W**	6
195	Bottom plate	**KP214W**	3
196	Lockwasher, 3/8”, med.	**KP1108**	24
197	Hex nut, stl, 3/8”-16UNC2B	**KP276**	24
198	Spacer	**KP3011A4**	6
199	Contact yoke assembly	**KA6WV**	3
200	Washer 5/16", SAE, stl.	**KP350**	3
201	Stop nut, elastic	**KP2020A2**	3
202	Insulating spacer	**KA62R**	13
203	Contact nut	**KP207W**	6
204	Washer, retaining	**KP515RV2**	6
205	Fiber tube (includes retaining ring)	**KP512RV**	6
206	Contact cup	**KP206W**	6
207	Contact spring	**KP117W**	12
208	Spring spacer	**KP210W**	12
209	Garter spring	**KP209W**	6
210	Contact arm assembly	**KA124W**	36
211	Contact retainer	**KP211W**	6
212	Cap screw, fil-hd. 3/8"-24UNF 2 x 1-1/4”	**KP1069**	6
213	Gasket	**KP136W**	6
214	Plate	**KP1293M**	24
215	Plate	**KP213W**	12
216	Plate	**KP1294M**	48
217	Plate	**KP523R4**	36
218	Roll pin, 1/8" x 13/16"	**KP506**	3

PARTS LIST - HEAD MECHANISM - TYPES RVE AND WVE RECLOSERS

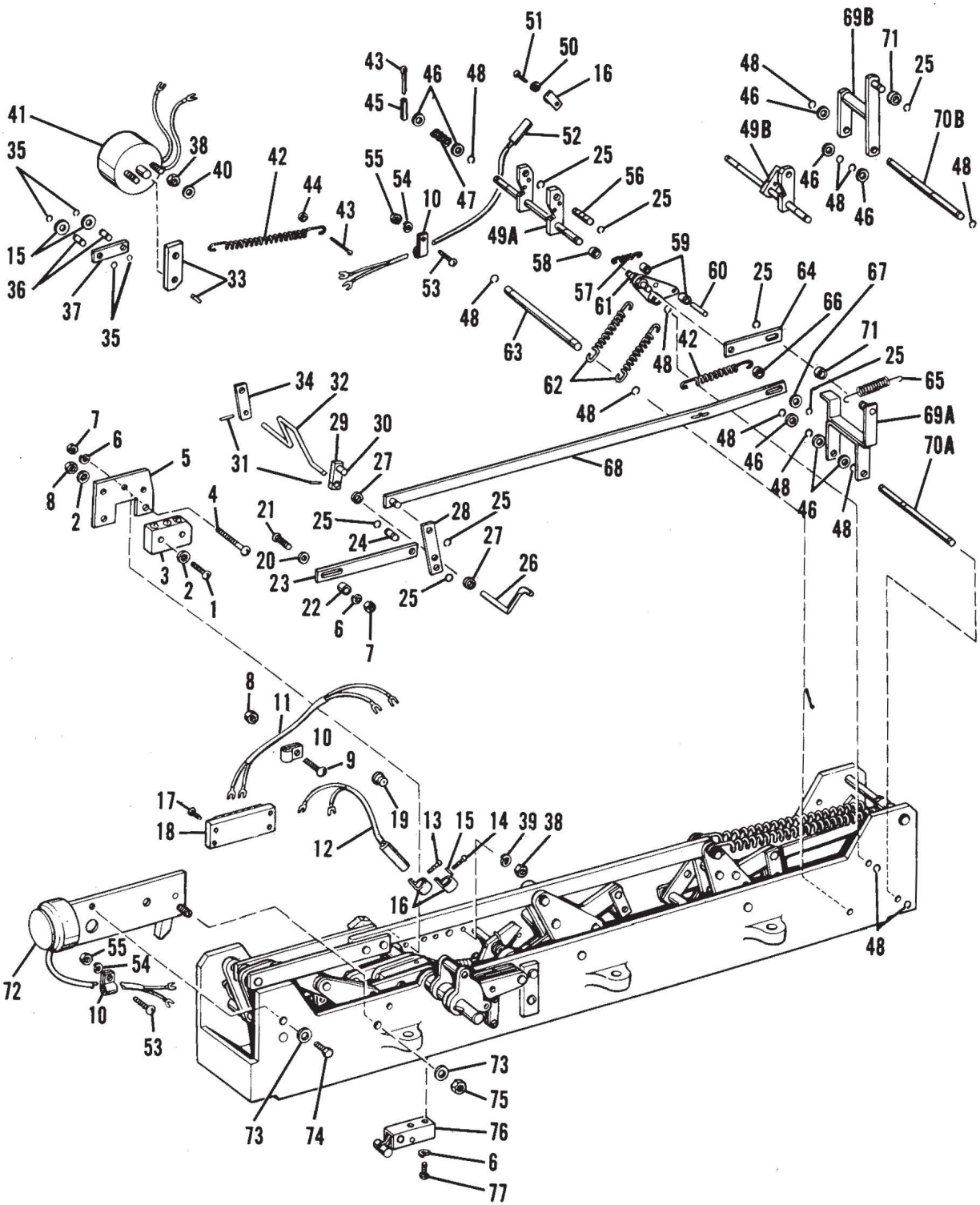

PARTS LIST - HEAD MECHANISM - TYPES RVE AND WVE RECLOSERS

Item No.	Description	Catalog Number	Quantity Per Recloser
1	Machine screw, #6-32NC2 x1" lg rd hd brass	**KP681**	2
2	Lockwasher, #6, internal tooth, bronze	**KP826**	5
3	Switch, hermetically sealed type 1HS3 with roller lever actuator (Minneapolis Honeywell)		1
4	Machine screw, #10-24NC2 x 3/4", lg rd hd, stl, cad	**KP497**	2
5	Bracket	**KP186RE**	1
6	Lockwasher, #10 med, stl, cad	**KP353**	6
7	Hex nut, #10-24NC2, stl, cad	**KP272**	4
8	Hex nut, #6-32NC2, brass, cad	**KP852**	3
9	Machine screw, #6-32NC2 x 1/2" lg rd hd, brass, cad	**KP641**	1
10	Cable clip	**KP2006A8**	8
11	Lead wire assembly	**KA62RE**	1
12	Mercury switch	**KP134RE**	1
13	Machine screw, #8-32NC2 x 1/4", lg rd hd, stl, cad	**KP500**	1
14	Machine screw, #8-32NC2 x 5/8" lg rd hd, stl, cad	**KP669**	1
15	Washer, #10L, plain brass	**KP560**	4
16	Nyloclip, HP-8N, Burndy	**KP2006A4**	4
17	Machine screw, #6-32NC2 x 5/8", lg fil hd, stl, cad	**KP1043**	2
18	7-terminal board	**KP882**	1
19	Grommet, rubber	**KP2017A4**	1
20	Washer, #10S, plain, brass, cad	**KP840**	1
21	Machine screw, #10-24NC2 x 16, lg rd hd, stl, cad	**KP670**	2
22	Spacer	**KP133RE**	1
23	Link	**KP128RE**	1
24	Groove pin	**KP3124A3**	1
25	Retaining ring, WA514	**KP75**	10
26	Arm	**KP1295R**	1
27	Spacer	**KP3009A9**	2
28	Lever	**KP130RE**	1
29	Lever, order with item #30	**KP118RE**	1
30	Pin, order with item #29	**KP119RE**	1
31	Roll pin, 3/32" X 1/2"	**KP504**	3
32	Transfer shaft	**KP152RE**	1
33	Roll pin and lever (included in item 41)		
34	Lever	**KP117RE**	1
35	Retaining ring, #WA510	**KP72**	4
36	Groove pin	**KP3123A4**	2
37	Link	**KP126RE**	1
38	Hex nut, 1/4"-28NF2, stl, cad	**KP290**	4
39	Lockwasher, 1/4", med	**KP337**	4
40	Washer, #14S, plain, brass, cod	**KP811**	3
41	Rotary solenoid assembly	**KA12RE**	1
42	Spring, counterbalance	**KP98L**	2
43	Cotter pin, 3/32" X 1", lg,brass	**KP433**	2
44	Spacer	**KP3007A30**	1
45	Roll pin, 1/8"X 3/4"	**KP502**	1
46	Washer, flat, 5/16", SAE, stl,cad	**KP350**	13
47	Spring	**KP1176R**	1
48	Retaining ring, WA516	**KP77**	19
49A	Handle shaft assembly (used with items 69A and 7OA)	**KA15RE**	1
49B	Handle shaft assembly (used with items 69B and 7OB)	**KA15RE**	1
	50 Self-tapping screw, #6-32NC2 x 1/2", lg, Type F	**KP30**	2
51	Washer, #6L, plain, brass		2
52	Mercury switch subassembly	**KA63RE**	1
53	Machine screw, #8-32NC2 x 5/8.', lg, rd hd, brass, cad	**KP669**	6
54	Lockwasher, #8 med, phos. bronze, cad	**KP813**	6
55	Hex nut, #8-32NC2,steel, cad	**KP573**	6
56	Pin, reset lever	**KP280R**	1
57	Spring	**KP16GS**	1
58	Spacer	**KP330R**	1
59	Spacer	**KP3006A6**	2
60	Pin, spring anchor	**KP282R**	1
61	Trip lever assembly	**KA17RE**	1
62	Spring, bell crank	**KP12GS**	2
63	Shaft, spring anchor	**KP1488R**	1
64	Link	**KP1147R**	1
65	Spring	**KP731R**	1
66	Spacer	**KP3007A1**	1
67	Washer, #14S, plain,brass, cad	**KP811**	1
68	Auxiliary switch bar assembly	**KA253R**	1
69A	Trip latch lever (used with items 49A and 70A)	**KA647R**	1
69B	Trip latch lever (alternate used with items 49B and 70B)	**KA13RE**	1
70A	Shaft (used with items 49A and 69A)	**KP1678R**	1
70B	Shaft (alternate-used with items 49B and 69B)	**KP125RE**	1
71	Spacer	**KP3007A8**	1
72	Solenoid trip assembly (The solenoid may be ordered separately as part no. KP182RE)	**KA55RE**	1
73	Flat washer, 1/4,, SAE, stl cad	**KP827**	2
74	Cap screw, 1/4"-20NC2 x 1/2" lg hex hd stl cad	**KP701**	1
75	Hex nut, 1/4"-20NC2, stl, cad	**KP279**	1
76	Cam roller assembly	**KA67R**	1
77	Machine screw, #10-24NC2 x 7/16",lg, rd hd,stl cad	**KP489**	2

PARTS LIST - HEAD MECHANISM - TYPES RVE AND WVE RECLOSERS

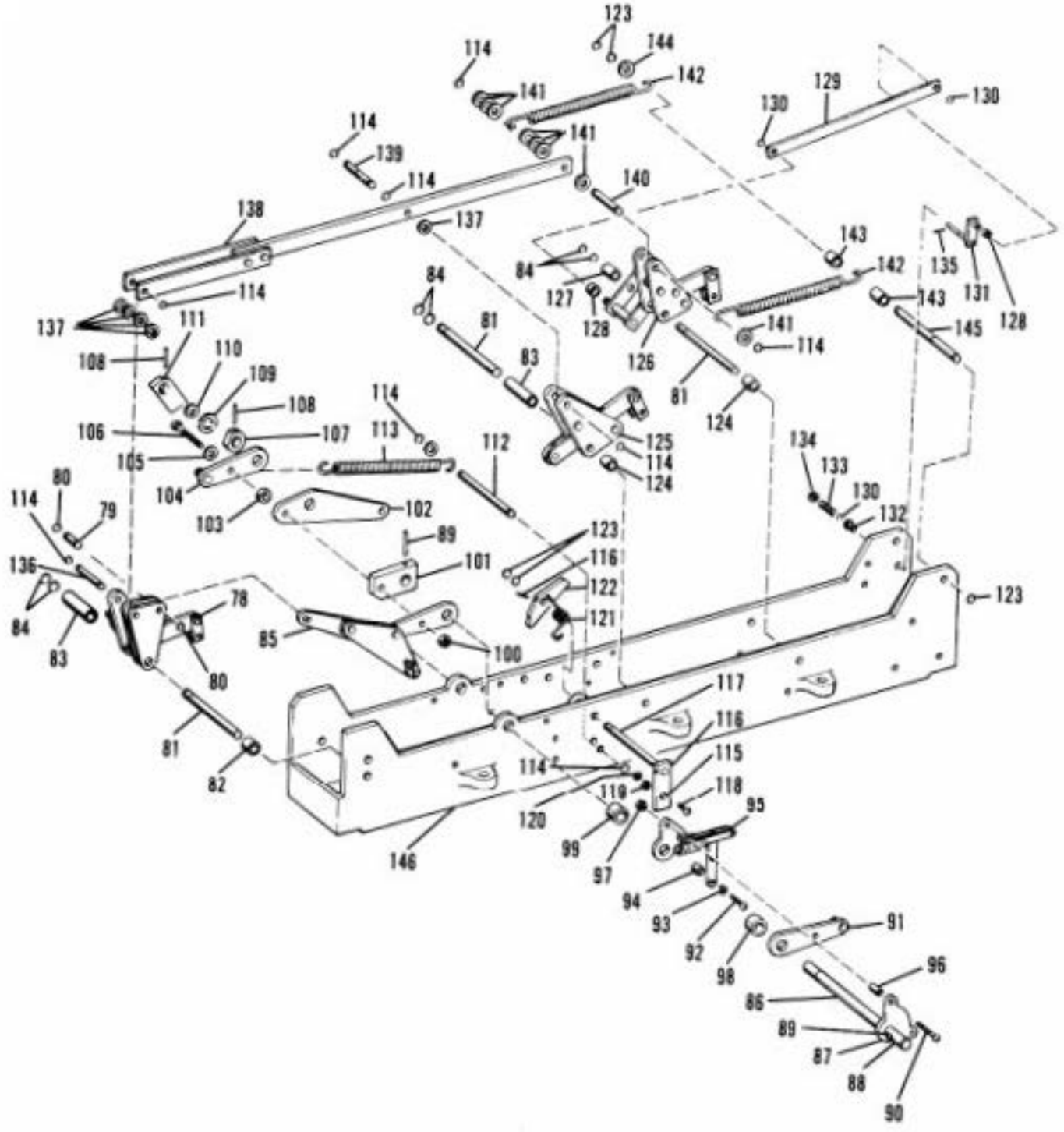

PARTS LIST - HEAD MECHANISM - TYPES RVE AND WVE RECLOSERS

Item No.	Description	Catalog Number	Quantity Per Recloser
78	Contact and toggle support assembly	**KA361R**	1
79	Toggle pin	**KP273R**	1
80	Retaining ring #5133-37, Type E	**KP86**	2
81	Shaft	**KP1198R**	3
82	Spacer	**KP3009A18**	1
83	Spacer	**KP3009A22**	2
84	Retaining ring, WA520	**KP100**	6
85	Toggle assembly	**KP450R**	1
86	Reclosing shaft (order only with items 87, 88 and 89)	**KP295R**	1
87	Roll pin, 1/8” X 1-1/4”, lg. (order only with items 86, 88, and 89)		
88	Toggle driver (order only with items 86, 87, and 89)	**KP1329R**	1
89	Roll pin, 3/32” X 1-1/4", lg. (order only with items 86, 87, and 88)	**KP512**	2
90	Machine screw, #10-32NF2 x 1-1/4", lg. rd. hd., stl., cad.	**KP630**	1
91	Switch driver	**KP148R**	1
92	Machine screw, 1/4"-20NC2 x 1-1/4", lg. rd. hd., stl., cad.	**KP479**	2
93	Lockwasher, 1/4" med.	**KP337**	4
94	Spacer	**KP3007A15**	2
95	Switch toggle assembly	**KA428R**	1
96	Spacer	**KP3006A4**	1
97	Stop nut, elastic, #10-32NF2	**KP2020A1**	1
98	Spacer	**KP3015A2**	1
99	Spacer	**KP3015A3**	1
100	Stop nut, #10-24NF-3 elastic	**KP2020A2**	1
101	Reset lever	**KP166R**	1
102	Reset lever	**KP164R**	1
103	Spacer	**KP3011A4**	1
104	Reset arm and pin assembly	**KA17R**	1
105	Washer 1/4", x 0.375" x 0.031" thk, brass, cad. (optional)		
106	Bolt	**KP346R**	1
107	Cam	**KP187RE**	1
108	Rail pin, 1/8" x 1”, lg.	**KP518**	1
109	Washer	**KP2028A4**	1
110	Retaining ring, #5133-62, Type E	**KP87**	1
111	Mounting bracket	**KP163RE**	1
112	Shaft, spring anchor	**KP292R**	1
113	Spring, reclosing	**KP191R**	1
114	Retaining Ring, WA516	**KP77**	36
115	Lever reset trip (order only with items 116 and 117)	**KP194R**	1
116	Roll pin, 3/32” X 3/4”, lg. (order only with items 115 and 117)	**KP523**	2
117	Shaft (order only with items 115 and 116)	**KP153RE**	1
118	Machine screw, #10-24NC2 x 1”, lg. rd. hd., stl., cad.	**KP670**	1
119	Hex nut, #10-24NC2, stl., cad.	**KP272**	1
120	Lockwasher, #10 med., st., cad.	**KP353**	1
121	Spring, reset lever	**KP172R**	1
122	Lever, reset trip	**KP171R**	1
123	Retaining ring, WA518, Type C	**KP79**	5
124	Spacer	**KP3009A17**	2
125	Contact and trip arm assembly	**KA360R**	1
126	Contact and counter arm assembly	**KA359R**	1
127	Spacer	**KP3009A16**	1
128	Spacer	**KP3007A8**	3
129	Counter link	**KP183R**	1
130	Retaining ring,WA514,Type C	**KP75**	10
131	Contact lever and shaft assembly	**KA318R**	1
132	Bearing, shaft	**KP1055R**	1
133	Spring	**KP1180R**	1
134	Washer#14S, plain, brass, cad.	**KP811**	4
135	Roll pin, 3/32" x 1/2"	**KP504**	1
136	Groove pin	**KP3125A5**	1
137	Washer, flat, 5/16", SAE, brz. irr.	**KP1120**	13
138	Contact bar assembly	**KA13R**	1
139	Contact bar pin	**KP290R**	1
140	Pin	**KP3125A9**	1
141	Washer, flat, 5/16" AN stl., zn. pl.	**KP833**	8
142	Contact opening spring	**KP173R**	2
143	Spacer	**KP3011A34**	2
144	Washer, flat, 3/8" SAE, Stl., cad.	**KP547**	1
145	Spring anchor shaft	**KP284R**	1
146	Frame, operating mechanism	**KP189RE**	1

Cooper Power Systems

Quality from
Cooper Industries

©1988 Cooper Industries

P.O. Box 2850, Pittsburgh, PA 15230

KTM
4/88

Reclosers

COOPER Power Systems

Service Information

Form 3A Type ME Electronic Control Installation, Operation, and Testing Instructions

S280-75-1

Applicable to Form 3A Controls above Serial Number 50070

911068KMA-F

Figure 1.
Kyle® Form 3A Type ME Electronic Recloser Control.

Contents

Safety Information 2
Product Information 3
Introduction 3
Acceptance and Initial Inspection 3
Handling and Storage 3
Control Battery Storage and Charging 3
Description of Control 4
Description of Control Operation 5
Control Battery 7
Temperature-Regulated Battery Charger 9
Programming and Operating the Control 10
To Remove the Control from Service 10
To Return the Control to Service 10
Number of Operations Selectors 10
Reclosing Interval Timing Delay Selectors 11
Minimum-Trip Resistor Cartridges 11
Ground- and Phase Trip Timing Plugs 12
Reset Delay Selector 12
Reset Timed from First Trip Operation 13
Operating Switches and Indicators 13
Installation Procedure 15
Mounting the Control 15
Grounding the Control 16
Control Cable 17
Shielding and Surge Protection of Remote Cables 17
Customer Connections Terminal Strip 17
Control/Recloser Interchangeability 18
Accessories 20
Verification Procedure Prior to Placing Control and Recloser into Service 20
Testing Procedures 21
Testing with Type MET Tester 21
Testing an Installed Control 21
Closing the Recloser 22
Soldering-Gun Test 24
Testing with Simulated Current 25
Testing with Low-Voltage Current 28
Maintenance Information 31

SAFETY FOR LIFE

Cooper Power Systems products meet or exceed all applicable industry standards relating to product safety. We actively promote safe practices in the use and maintenance of our products through our service literature, instructional training programs, and the continuous efforts of all Cooper Power Systems employees involved in product design, manufacture, marketing, and service.

We strongly urge that you always follow all locally approved safety procedures and safety instructions when working around high voltage lines and equipment and support our "Safety For Life" mission.

SAFETY INFORMATION

The instructions in this manual are not intended as a substitute for proper training or adequate experience in the safe operation of the equipment described. Only competent technicians who are familiar with this equipment should install, operate, and service it.

A competent technician has these qualifications:

- *Is thoroughly familiar with these instructions.*
- *Is trained in industry-accepted high- and low-voltage safe operating practices and procedures.*
- *Is trained and authorized to energize, de-energize, clear, and ground power distribution equipment.*
- *Is trained in the care and use of protective equipment such as flash clothing, safety glasses, face shield, hard hat, rubber gloves, hotstick, etc.*

Following is important safety information. For safe installation and operation of this equipment, be sure to read and understand all cautions and warnings.

Hazard Statement Definitions

This manual may contain four types of hazard statements:

DANGER: Indicates an imminently hazardous situation which, if not avoided, will result in death or serious injury.

WARNING: Indicates a potentially hazardous situation which, if not avoided, could result in death or serious injury.

CAUTION: Indicates a potentially hazardous situation which, if not avoided, may result in minor or moderate injury.

CAUTION: Indicates a potentially hazardous situation which, if not avoided, may result in equipment damage only.

Safety Instructions

Following are general caution and warning statements that apply to this equipment. Additional statements, related to specific tasks and procedures, are located throughout the manual.

DANGER: Hazardous voltage. Contact with hazardous voltage will cause **death** or severe personal injury. Follow all locally approved safety procedures when working around high and low voltage lines and equipment. G103.3

WARNING: Before installing, operating, maintaining, or testing this equipment, carefully read and understand the contents of this manual. Improper operation, handling or maintenance can result in death, severe personal injury, and equipment damage. G101.0

WARNING: This equipment is not intended to protect human life. Follow all locally approved procedures and safety practices when installing or operating this equipment. Failure to comply can result in death, severe personal injury and equipment damage. G102.1

WARNING: Power distribution equipment must be properly selected for the intended application. It must be installed and serviced by competent personnel who have been trained and understand proper safety procedures. These instructions are written for such personnel and are not a substitute for adequate training and experience in safety procedures. Failure to properly select, install, or maintain power distribution equipment can result in death, severe personal injury, and equipment damage. G122.2

PRODUCT INFORMATION

Introduction

Service Information S280-75-1 provides installation instructions, operation information, and testing procedures for the Kyle® Form 3A Type ME electronic recloser control.

This control is used in conjunction with a Kyle electronically controlled recloser. If used with a Type VWE, VWVE27, VWVE38, WE, or WVE recloser, refer to *Service Information S280-40-2*. If used with a VSA12, VSA16, or VSA20 recloser, refer to *Service Information S280-45-1*. If used with a VSO12, VSO16, or VSO20 recloser, refer to *Service Information S280-57-1*.

The information contained in this manual is organized into the following major categories: Safety Information, Product Information, Programming and Operating the Control, Installation Procedure, Testing, and Maintenance Information. Refer to the table of contents for page numbers.

Read and understand the contents of this manual and follow all locally approved procedures and safety practices before installing or operating this equipment.

Additional Information

These instructions do not claim to cover all details or variations in the equipment, procedures, or process described nor to provide directions for meeting every possible contingency during installation, operation, or maintenance. When additional information is desired to satisfy a problem not covered sufficiently for the user's purpose, please contact your Cooper Power Systems sales engineer.

Acceptance and Initial Inspection

Each control (Figure 1) is completely assembled, tested, and inspected at the factory. It is carefully calibrated, adjusted, and in good condition when accepted by the carrier for shipment.

Upon receipt, inspect the control thoroughly for damage and loss of parts incurred during shipment. If damage or loss is discovered, file a claim with the carrier immediately.

Handling and Storage

Take care during handling and storage to minimize the possibility of damage. If the control is to be stored for any length of time before installation, provide a clean, dry storage area. If storage is in a humid atmosphere, make provisions to keep the cabinet heater energized.

Note: To energize the cabinet heater, apply to 120 Vac to Terminals 5 and 6 of the input terminal strip mounted vertically on the back panel of the control cabinet. Refer to Figure 4.

Control Battery Storage and Charging

The nickel-cadmium control battery is fully charged prior to shipment and is ready for use. The battery should only be stored in a fully charged state. Permanent irreversible damage will result if a battery is stored in a deeply discharged state. The battery should be kept on a maintenance charge of 15 mA until the control is put into service. After three months of storage, check the open circuit voltage. The battery will require recharging if it is at or below 24 volts at 25°C (77°F). Never store batteries at temperatures exceeding 47°C (117°F), as permanent damage can result in one month. Storage at or below room temperature is recommended to prolong storage time and maintain capacity over time.

IMPORTANT: The battery must be disconnected prior to shipping or storing the control.

IMPORTANT: Connect the control battery when AC power is connected to the control's AC supply Input Terminal Block.

To maintain the battery charge, energize the control's built-in charger with AC power applied to the input terminal block. If it is not possible to charge the battery with the control's built-in charger, a portable dual rate bench type charger, catalog no. KA1142ME3, is available. The charger provides a selectable output of either 15 mA for maintaining a charged battery or 50 mA for charging a discharged or partially discharged battery. Unless it the battery is known to be fully charged, it should be charged at 50 mA for 48 hours (CHARGE switch position) and then maintained at 15 mA (MAINTAIN switch position) until the battery is installed in the control and put into service.

Battery Connections

When the battery is shipped from the factory, the battery source is disconnected and its output plug is taped to the cabinet. Connect the battery plug into the mating connector to complete the battery circuit.

Minimum-Trip Resistors
Establish the minimum-trip current levels for ground and each phase; cartridges are marked in primary amps and clamped in place.

Ground-Trip Selector
Programs the number of fast ground-trip operations as defined by the timing plug in Socket 1; the remaining (slower) operations to lockout are defined by the plug in ground-trip Socket 2.

Lockout Selector
Programs the total number of operations to lockout.

Phase-Trip Selector
Programs the number of fast phase-trip operations as defined by the timing plug in Socket 1; the remaining (slower) operations to lockout are defined by the plug in Phase-trip Socket 2.

Reclosing Interval Plugs
Determines the delay interval for each closing operation. The delay value is determined by the position of the plug in the socket adapter. An instantaneous plug is available for the first reclose interval only.

Operation Counter
Records the cumulative trip operations of the control.

Ground-Trip Timing Plugs
Provide a variety of current-integrated timing curves on individual plugs for coordinating the ground-trip operation with backup and downline protective devices.

Sequence Relay
Steps the control through its operating sequence.

Phase-Trip Timing Plugs
Provide a variety of current-integrated timing curves on individual plugs for coordinating the phase-trip operation with backup and downline protective devices.

Ground-Trip Operation Switch
Blocks all ground tripping in the BLOCK position: Prevents unintentional tripping during single-phase switching operations.

Reset-Delay Plug
Determines the delay interval before the control resets after a successful reclosure during an operation sequence. The delay value is determined by position of the plug in the socket adapter.

Manual Control Switch
In the TRIP position, it locks out the control, advances the sequence relay to lockout, and disconnects the battery from the control circuits. In the CLOSE position, it moves the sequence relay to the home position, reconnects the battery, and closes recloser. If held in the CLOSE position, it will override cold-load inrush; however, the control will lock out for permanent faults.

Battery Test Terminals
Enable checking battery voltage, charging rate, and quiescent battery current drain.

Lockout-Indicating Signal Lamp
Provides visual indication of control lockout.

Control Fuse
Protects the closing solenoid coil (on reclosers that employ solenoid closing) if closing voltage is too low. Connected in series with the closing contactor in the recloser on motor-operated units; connected in series with the contactor rotary solenoid on reclosers that employ solenoid closing.

Non-Reclosing Switch
Sets the control for one-trip to lockout without disturbing the lockout setting of the operations selector.

Lamp Test Lockout Switch
Enables testing the signal lamp and checking for control lockout.

911068KMA-E

Figure 2.
Front Panel of Form 3A Control.

Description of Control

The Kyle Type ME Form 3A electronic recloser control is comprised of a number of programmable, solid-state electronic circuits that perform the command functions involved in automatic recloser operation.

Control Panel

A swing-out front panel contains the programming and operating elements of the control (Figure 2). The upper, black portion of the front panel contains the plug-in components and setting knobs for programming automatic recloser operation. The switches and indicators used for manual operation and service are grouped on the bottom, light portion of the panel.

Tie Board

The front panel is backed by a printed-circuit tie board which supports and interfaces the plug-in circuit boards with other related circuit components (Figure 3). Program-altering, remote-control, indicating, and general convenience accessories can be added to further expand and enhance the application capabilities of the control.

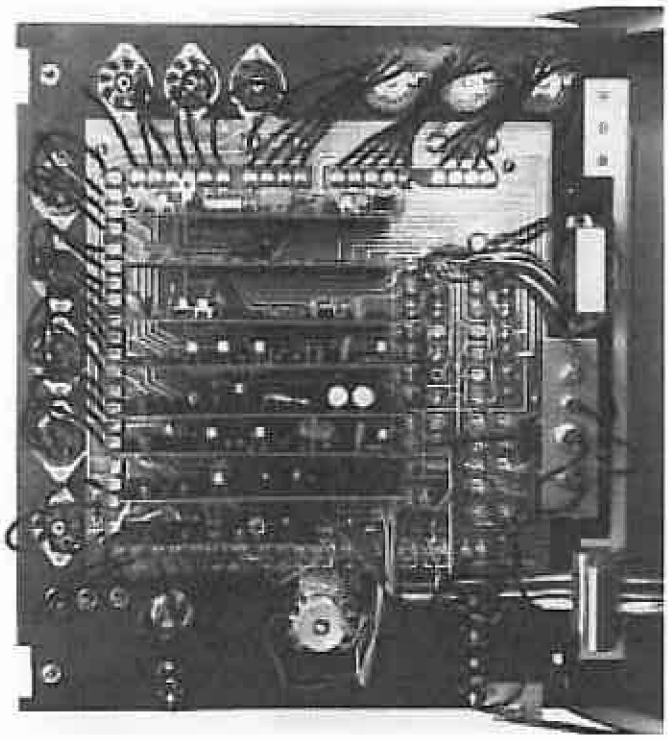

911069KMA-F

Figure 3.
Tie Board on Back of Front Panel Mounts the Individual Printed Circuit Boards.

Phase- and Ground-Trip Protective Feature

The phase- and ground-trip protective feature extends the maximum fault-current capability of the ME control to the maximum interrupting rating of the recloser.

The phase- and ground-trip protection feature consists of four Zener diodes bracket-mounted to the back panel alongside the tie board (shown in Figure 3).

Back Panel

The control battery, cabinet heater, surge module for auxiliary power supply, customer connections terminal strip, and accessory boards are located inside the control cabinet and on the back panel of the control as shown in Figure 4.

Description of Control Operation

Line current flowing through the recloser is sensed by three internally mounted bushing-current transformers in the recloser, one on each phase. When the phase current or the zero-sequence (ground) current exceeds its programmed minimum-trip value, the electronic control initiates the programmed sequence of recloser tripping and reclosing operations. If the fault is temporary, the control ceases to command recloser operations after the successful reclosing, and the control resets to the start of its operating sequence after a preset time delay. If the fault is permanent, the control performs its complete programmed sequence of recloser commands and locks out with the recloser open. Once locked-out, the control must be manually reset to the start of its operating sequence, which simultaneously closes the recloser.

Factory-calibrated timing plugs establish the time–current characteristics for both phase and ground tripping. A set of two individual timing curves provides dual timing for both phase and ground.

A functional block diagram of the control operation is shown in Figure 5. Line current conditions are monitored continuously by three bushing-type current transformers in the recloser, one on each phase. Output of these transformers is fed to the trip network in the control, which includes the minimum-trip resistors, isolation transformers, and rectifier circuits.

When current above the selected minimum-trip level is detected in one or more phases, the following chain of events will occur for an operating sequence of two fast and two delayed operations:

The overcurrent signal is integrated with time on the characteristic curve of the timing plug in Socket 1 to produce the signal which energizes the trip circuit. Energizing the trip circuit connects the battery to the trip solenoid to trip open the recloser. Simultaneously, the sequence relay advances to energize the first reclosing interval-delay plug. Upon expiration of this reclosing interval delay, a closing signal from the control closes the recloser, and the sequence relay sets up the circuitry for the second fast trip operation.

If current remains above the minimum-trip level, the tripping—reclosing sequence of fast and delayed operations is repeated, as programmed, to lockout.

If the overcurrent is cleared before the operating sequence reaches lockout, the reset-delay circuit starts timing when the recloser closes into the un-faulted line. When the reset-delay plug times out, the sequence relay is reset to the start or home position and the control is ready for another two-fast, two-delayed trips operating sequence. However, should the fault recur before the reset plug times out, the control will continue its operating sequence where it left, and the reset delay timing will be erased.

Ground-fault sensing and tripping operations occur exactly the same as phase sensing and tripping, except that zero-sequence (ground) current is sensed instead of phase current. The ground-fault circuitry includes its own minimum-trip resistor, fast and delayed trip timing plugs, and number of fast operations setting. Reclose and reset intervals and operations to lockout are common for both phase-trip and ground-trip modes of operation.

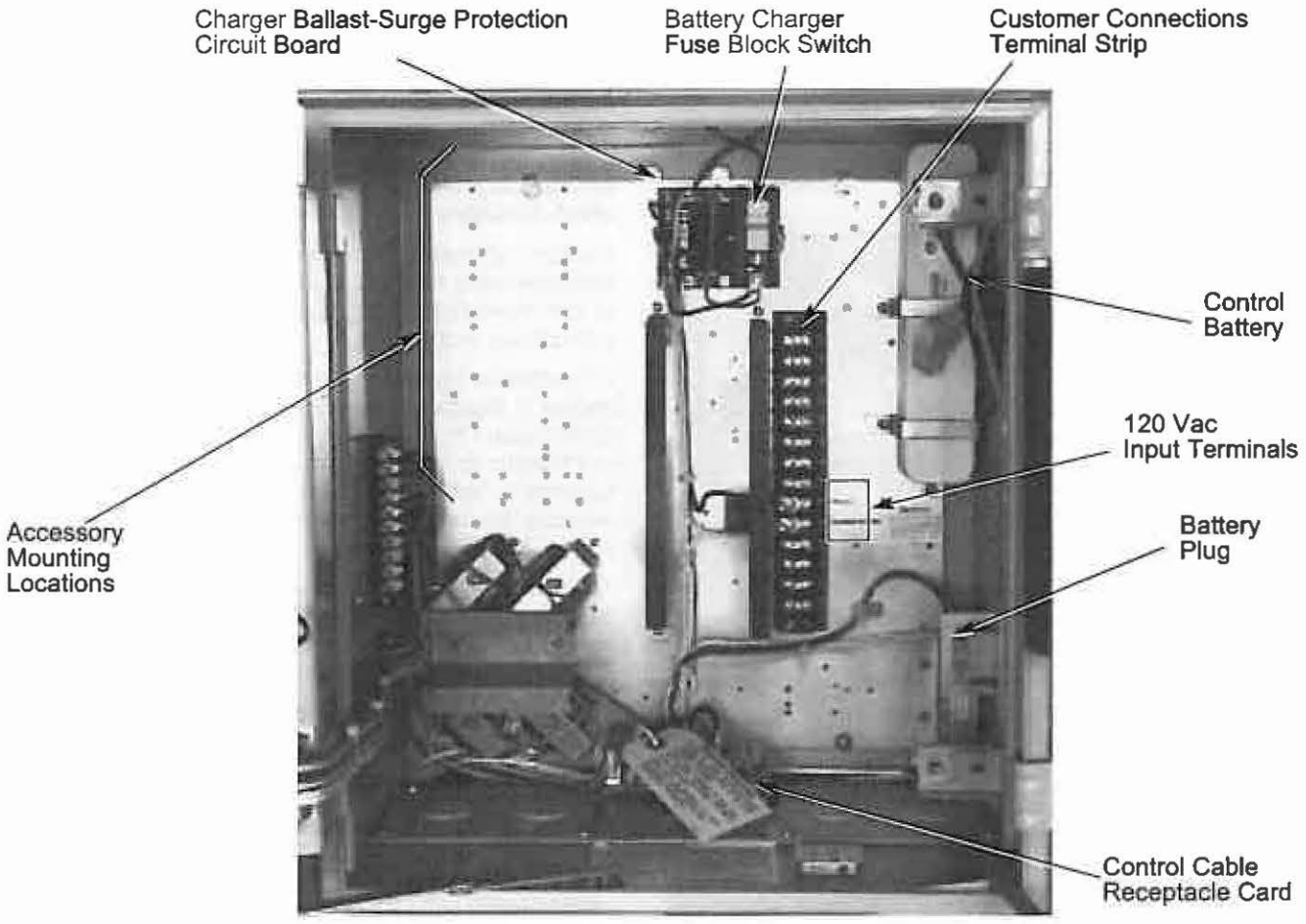

Figure 4.
Inside Back Panel of Form 3A Control.

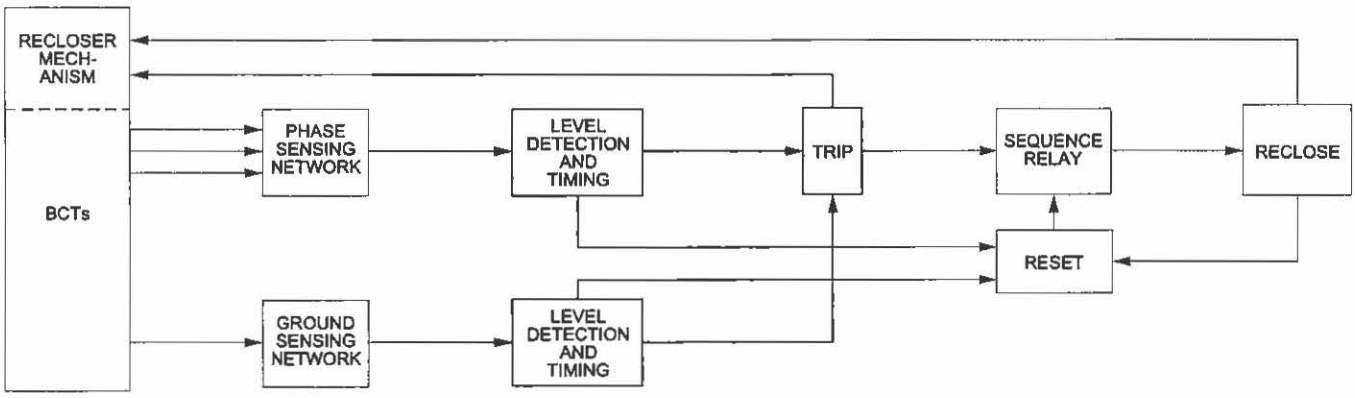

Figure 5.
Functional Block Diagram of Form 3A Control.

Control Battery

Power to operate the tripping and reclosing solenoids in the recloser is provided by a 24 volt, nickel-cadmium battery located in the back, upper right corner of the control cabinet. A temperature-regulated 120 Vac potential battery charger, built into the control circuitry, provides a temperature compensated charging current to the battery. **All Form 3A controls require a 120 Vac input to the control to energize the battery charger.**

If 120 Vac cannot be provided to the control, the recloser must be equipped with a factory-installed battery charger accessory.

A. In solenoid-operated reclosers (RVE, RXE, VWE, VWVE27, VWVE38, WE, and VWE) a BCT accessory must be added to the recloser to obtain charging power from the line.

Note: Line current flow through the recloser must be a minimum of 40 amps for at least 12 hours per day to provide sufficient charging power.

B. In motor-operated reclosers (CXE, VSA12, VSA16, VSA20, VSO12,VSO16, and VSML), a potential-type battery charger accessory must be added to obtain charging power from the 240 Vac auxiliary power source of the recloser.

Battery Check Procedures

Follow the check battery procedures to check the battery voltage, quiescent drain, and charging rate. The values in the test procedure is based on testing at 25° C (77° F).

Note: The control does not need to be connected to a recloser for the battery check tests.

CAUTION: Recloser misoperation. The control must be removed from service before disconnecting the control battery. Disconnecting the control battery from an in-service control may cause recloser misoperation (unintentional operation). Failure to comply can result in equipment damage and personal injury. T213.4

CAUTION: Equipment damage. Shorting battery positive to battery negative at the battery test terminals on the control panel will cause damage to the control. The control will be inoperative and possible misoperation (unintentional operation of the recloser) can result. T214.1

IMPORTANT: Battery voltage and charge current measurements can be made while the control is in service, from the test terminals provided on the face of the control panel. The control must be taken out of service for all other battery maintenance, battery replacement, or battery drain tests.

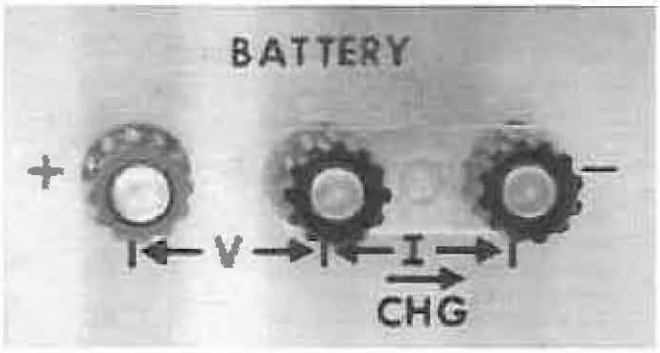

Figure 6.
Battery Test Terminals.
86847KMA-D

Check Battery Voltage Procedure

1. Remove the control from service. Refer to the **To Remove Control from Service** section in this manual.
2. Disable the control battery charger by opening the fused switch or removing the AC power from the control. Wait 3 to 5 minutes to allow the battery voltage to stabilize prior to testing the open circuit battery voltage.
3. Three battery test terminals in the lower right corner of the front panel are used to check the battery voltage, quiescent drain, and charging rate (Figure 6). The left hand pair of terminals (V) are connected directly across the battery to check battery voltage. The red terminal (far left) is battery positive (+).
4. The battery in the control will experience a steady drain of approximately 1.5–2.5 mA (may be as high as 4.5 mA with certain accessories).
5. Measure the battery voltage from the battery test terminals on the control front panel. If battery voltage is below 24 volts, the battery is either low on charge or failing. The battery should be removed for recharging and retested before returning to service.
6. If battery voltage is above 24 volts, perform the following load test. While measuring battery voltage, connect a 10Ω, 10 watt resistor across the battery test terminals for approximately 2–3 seconds. For ambient temperatures above -6°C (20°F), battery voltage should drop by no more than 3 volts from the open circuit voltage.

   Note: Either a KA638ME voltmeter accessory or a KMET Tester can be used for the load test. Both devices have a built in 10Ω load resistor.

7. If the temperature is below -6°C (20°F), the battery voltage/temperature should follow the lower curve in *Service Information S280-75-2 Figure 53*. If the voltage falls below the lower curve, the battery should be removed for bench testing.

Table 1
Quiescent Battery Drain Above Normal

DESCRIPTION	DRAIN (mA)
3-second reset plug	2.3
10-second reset plug	0.8
Sequence coordination accessory (when control is in home position)	0.8
Remote minimum-trip doubler (supervisory contacts closed)	6
Targets	1.9

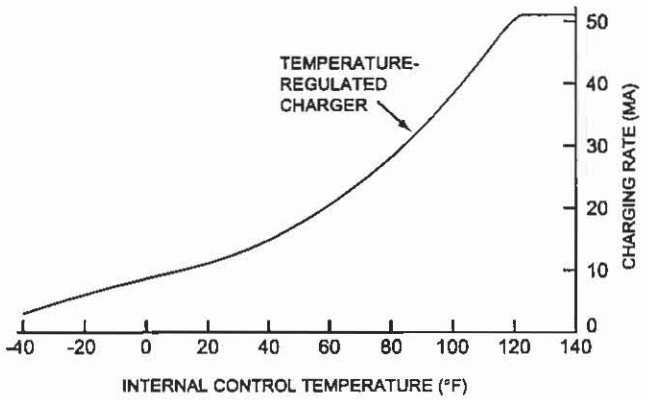

Figure 7.
Comparison of Charging Rates.

Check Battery Quiescent Drain and Charging Rate Procedure

The righthand pair of terminals (-I-) are connected in series with the negative battery lead to check quiescent drain and charging rate. Proceed as follows:

1. Remove the control from service. Refer to the **To Remove the Control from Service** procedure in the **Programming and Operating the Control** section of this manual.
2. Set the control to the home (reset) position by moving manual operator to CLOSE.
3. Plug a dc milliammeter into the current test terminals. Loosen both terminals slightly and disconnect the shorting link from between terminals.
4. With the battery charger **de-energized**, current will flow opposite to the direction shown by CHG. Under normal conditions, quiescent drain will be 1-1/2 to 2 mA. However, the shorter time reset plugs and certain accessories can, as shown in Table 1, increase the quiescent drain above nominal value.

   Note: To verify the charge/discharge polarity of the test meter, momentarily actuate the LAMP TEST/LOCK-OUT TEST toggle switch to LAMP TEST. The discharge current is measured.
5. With the battery charger energized, current will flow in the direction shown by CHG. The charging circuit used in the control is temperature regulated. The charging rate will vary depending on the internal control temperature, see Figure 7.
6. Replace and tighten the shorting link between the current terminals before removing the ammeter.

   Note: Bypass diodes in the battery circuit prevent the control from being disabled if the link is inadvertently left open.

IMPORTANT

Beginning with control serial number 53381, the key slot position of the battery charging board socket has been changed. The key slot on the temperature-regulated charging board (MEA1172, 120/240 Vac) has been moved to match the socket arrangement. The new charging board can be identified by the revision 6 or above marking adjacent to the part number. A blue label affixed to the accessory list location guide label, inside the control door, identifies the new temperature-regulated battery charging board.

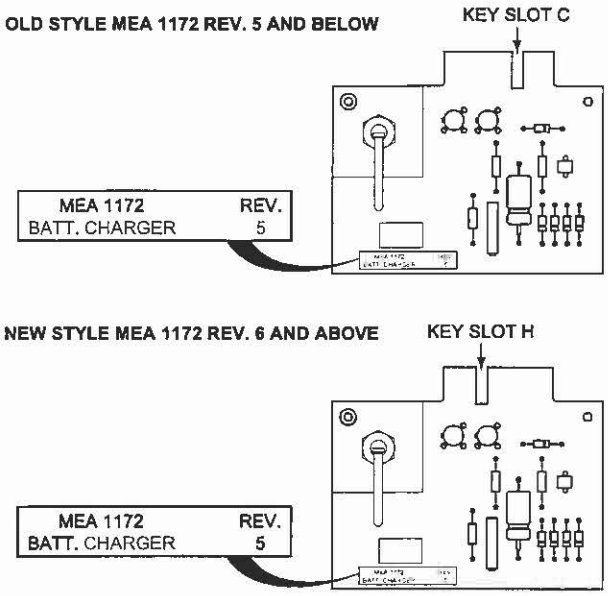

Note: Controls equipped with CT or potential charger in the recloser are unaffected by this change. They will continue to use the MEA 388-1 charging board, with the key in the original position.

Temperature-Regulated Battery Charger

All Form 3A Type ME controls, serial number 50070 and above, are equipped with a temperature-regulated battery charger as standard equipment.

Description

The temperature-regulated battery charger provides protection against battery drain and premature battery failure at high ambient temperatures. As the temperature increases, the self discharge rate of the control battery increases. The temperature-regulated battery charger compensates for this self-discharge by providing higher charging rates at higher temperatures.

Operation

The temperature-regulated battery charger consists of a charger ballast-surge protection card and a plug-in battery charger circuit board. It provides an increased charging rate proportional to the temperature inside the control cabinet (see Figure 7).

PROGRAMMING AND OPERATING THE CONTROL

The Form 3A control is preset at the factory for an automatic sequence of operations as specified on the order and should not be disturbed by unauthorized personnel. Changes in the control operating parameters should be made only by a qualified technician or engineer. The control must be removed from service prior to making any changes to programmed settings.

CAUTION: Equipment misoperation. Do not connect this control to an energized recloser until all control settings have been properly programmed and verified. Refer to the programming information for this control. Failure to comply can result in control and recloser misoperation, equipment damage, and personal injury. G110.3

CAUTION: Equipment damage. Never operate the control without a full set of proper circuit boards and time-current curve plugs in the no. 2 trip-timing sockets for both phase and ground. Failure to comply will result in misoperation of the control and recloser. T215.1

The plug-in components and selector switches for programming the control are located on the black, upper portion of the control panel.

To Remove the Control from Service

Prior to changing plug-in components, performing control maintainence, making programming changes, or replacing the battery on an in-service control, the following steps must be taken to prevent possible recloser misoperation.

1. Switch Ground Trip Block switch to BLOCK.
2. Disconnect control cable from control.
3. De-energize potential battery charger, by opening the battery charger fuse block switch (shown in Figure 4).
4. Operate the Manual Control switch to OPEN.
5. Unplug the control battery.

To Return the Control to Service

After required work is completed, return the control to service with the following steps:

1. Check that all plug-ins are properly installed and control settings are correct.
2. Connect control battery.
3. Close the battery charger fuse block switch to energize the potential battery charger.
4. Move Manual Control switch to CLOSE, to ensure that control is reset to the home position.
5. Reconnect the control cable to the control.
6. Switch Ground Trip Block switch to NORMAL.

IMPORTANT: Battery voltage and charge current measurements can be made while the control is in service from the test terminals provided on the face of the control panel. The control must be taken out of service for all other battery maintenance, battery replacement, or battery drain tests.

Number of Operations Selectors

The three selector knobs in the upper left corner of the panel (Figure 8) establish the operating sequence of the control. From one to four total operations to lockout can be selected on the center LOCKOUT knob. GROUND TRIP SOCKET [1] selector knob to the left establishes the number of ground trip operations (0 to 4) according to the time–current characteristic curve of the timing plug in GROUND TRIP SOCKET [1]. The balance of the ground-trip operations to lockout are then performed according to the characteristic curve of the timing plug in GROUND TRIP TIMING SOCKET (2).

PHASE TRIP SOCKET ◇1◇ selector knob to the right performs the same function for phase-trip sequence selection.

B1106BKMA-A

Figure 8.
Ground-Trip, Lockout, and Phase-Trip Operation Selectors.

Reclosing Interval Timing Delay Selectors

Depending upon the number of operations to lockout, one, two, or three reclosing intervals (each individually timed) can be programmed. The reclosing intervals are established by the solid-state timing plugs in the upper right corner of the panel (Figure 9). Times of 1, 2, 5, 7, 10, 15, 30, and 45 seconds are available on a multiple-setting plug (Figure 9). The small white arrow at the top of the plug indicates the value selected. Selection is determined by the position of the plug in the socket adapter (Figure 10). INST (instantaneous) and 60 second, single-value plugs are also available. Single value plugs do not use the socket adapter.

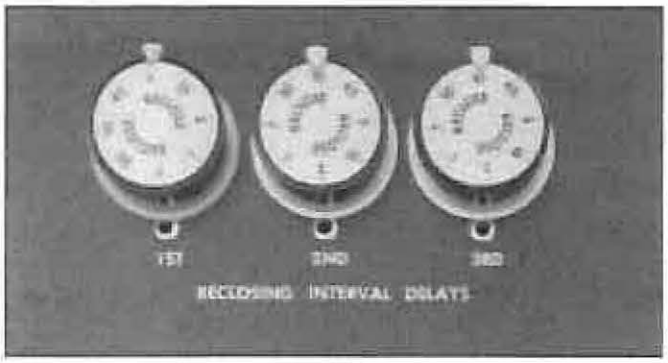

88837KMA-B

Figure 9.
Reclosing Interval Plugs with Multiple Delay Settings.

The INST reclosing interval plug may be used only in the first reclosing interval socket. The instantaneous reclosing interval time will vary depending upon the recloser on which the control is used; the approximate values are:

CXE recloser ..... .67 sec.

ME recloser ..... .63 sec.

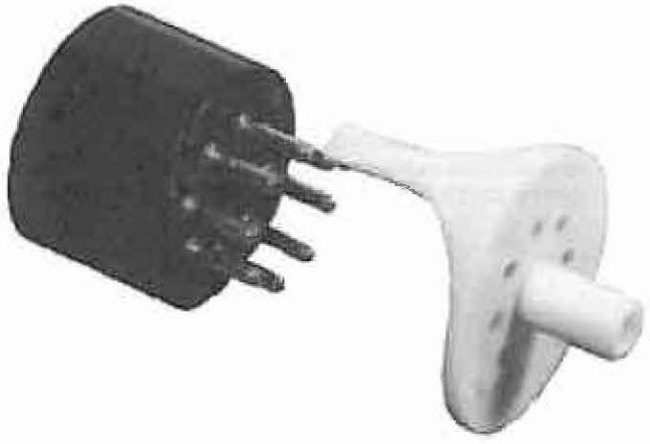

82268KMA-F

Figure 10.
Time is Determined by Position of Plug in Socket Adapter.

RVE, RXE, VWE, VWVE27, VWVE38, WE, WVE reclosers ..... .67 sec.

VSA12, VSA16, VSA20, reclosers ..... .50 sec.

The INST reclosing interval plug must not be used with the Type VSO recloser. No reclosing interval shorter than 1/2 second should be programmed into the Type ME control when it is used with the Type VSO recloser. A 1/2 second reclose plug is available (ordered by KA1177ME-1). If an instantaneous (INST) plug is used for the first reclosing interval, it will result in a 12 cycle reclosing time, which may be too short to permit arc deionization at the fault location.

Minimum-Trip Resistor Cartridges

The recloser minimum-trip current ratings are established with the plug-in resistor cartridges in the center of the control panel. The cartridges, labeled with their minimum-trip-current values, are identified for GROUND TRIP (one required), or PHASE TRIP (three required). All three phase-trip cartridges should have the same current rating.

All Kyle electronic reclosers, except VSA20, VS020, and discontinued Types ME and VSMT, use a yellow label minimum-trip resistor cartridge. Blue label cartridges are used with 2000:1 sensing CTs in the higher current rated VSA20 and VS020 reclosers and are not interchangeable with yellow label resistors.

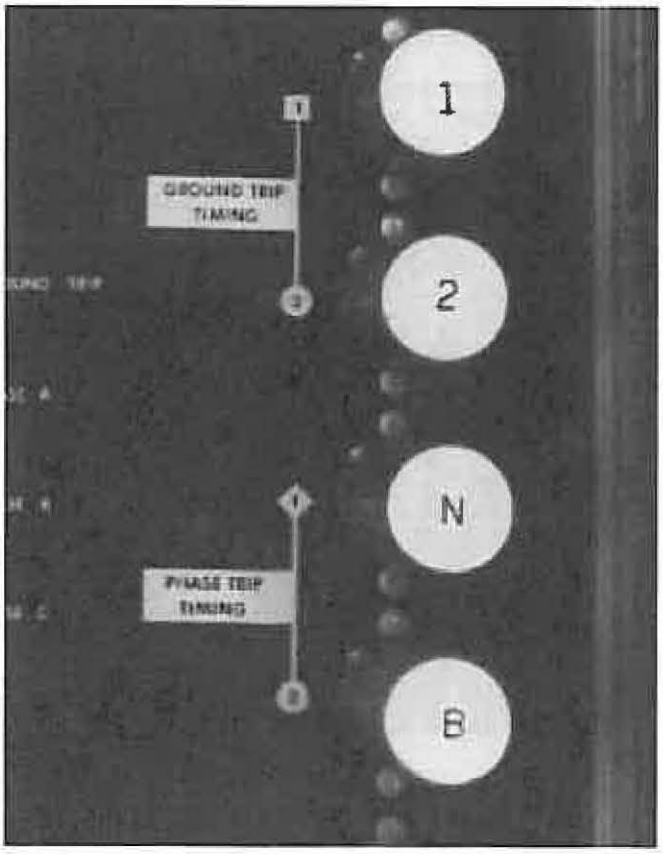

911068KMA-D

Figure 11.
Ground-and Phase-Trip Time-Current Curve Plugs.

Yellow label minimum-trip resistor cartridges are available in the following minimum-trip-current ratings:

Ground: 25, 35, 50, 70, 100, 120, 140, 170, 200, 240, 280, 340, 400, 480, and 560 amps;

Phase: 100, 120, 140, 170, 200, 240, 280, 300, 340, 400, 480, 560, 600, 800, 960, and 1120 amps.

Blue label cartridges are available in the following minimum-trip-current ratings:

Ground: 100, 140, 200, 240, 280, 340, 400, 480, 680, 800, 960, and 1120 amps;

Phase: 200, 240, 280, 340, 400, 480, 560, 600, 680, 800, 960, 1120, 1200, 1360, 1600, 1920,and 2240 amps.

Ground- and Phase-Trip Timing Plugs

Time-current curves for both phase and ground tripping are established by the four plugs along the right edge of the control panel (Figure 11). Individual plugs for 20 phase-trip timing curves and 16 ground-trip timing curves are available. (See *Reference Data TCC Index R280-91* for time-current curves).

CAUTION: Recloser misoperation. Ground- and Phase-trip timing plugs are not interchangeable. They must only be installed in the corresponding sockets. Failure to comply will cause misoperation of the control. T217.1

When dual-timing operation is programmed, the timing characteristic curve in Socket 1 always precedes the curve in Socket 2. When single-timing operation is programmed, the timing plug is installed in Socket 2 and the number of fast operations selector knob is set on zero.

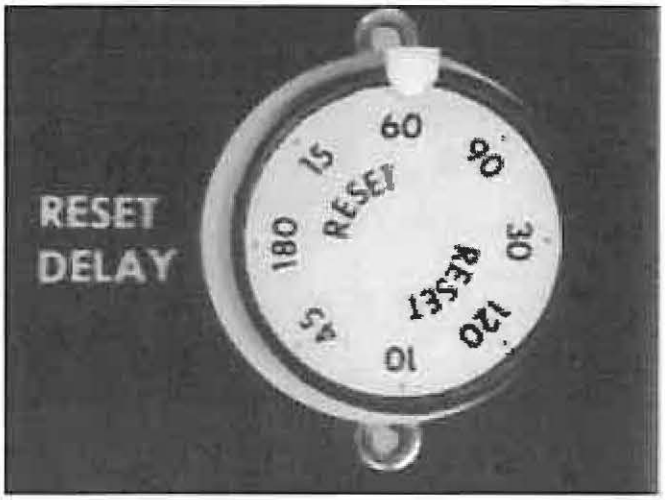

86647KMA-B

Figure 12.
Reset Delay Selector.

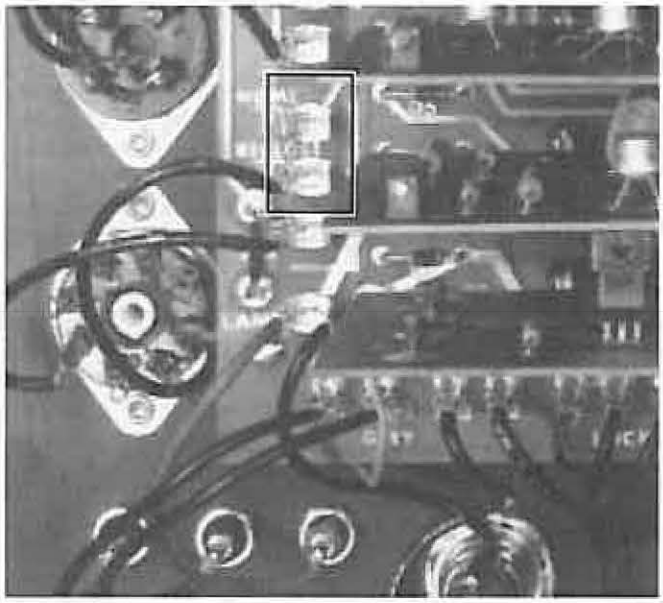

91106SKMA-B

Figure 13.
Control Operation can be changed from "reset-timed-from-successful-reclose" (standard) to "reset-timed-from-first-trip-operation."

CAUTION: Recloser misoperation. Socket 2 must always be provided with a timing plug; otherwise phase tripping is blocked and ground tripping may be instantaneous. T218.1

Reset Delay Selector

For temporary faults that are cleared before lockout occurs, reset timing starts after a successful reclosure (current is below minimum trip). The reset time is established by a timing plug similar to, but not interchangeable with, the reclosing interval plug. The reset delay plug (Figure 12) is located on the lower right hand portion of the control panel. Times of 10, 15, 30, 45, 60, 90, 120, and 180 seconds are available on a multiple setting plug and are determined by the position of the plug in the socket adapter (Figure 10). A 20 second, single-value plug is also available.

Note: The selected reset delay time must be longer than the longest reclosing interval of any load- or source-side protective device with which the recloser is to coordinate.

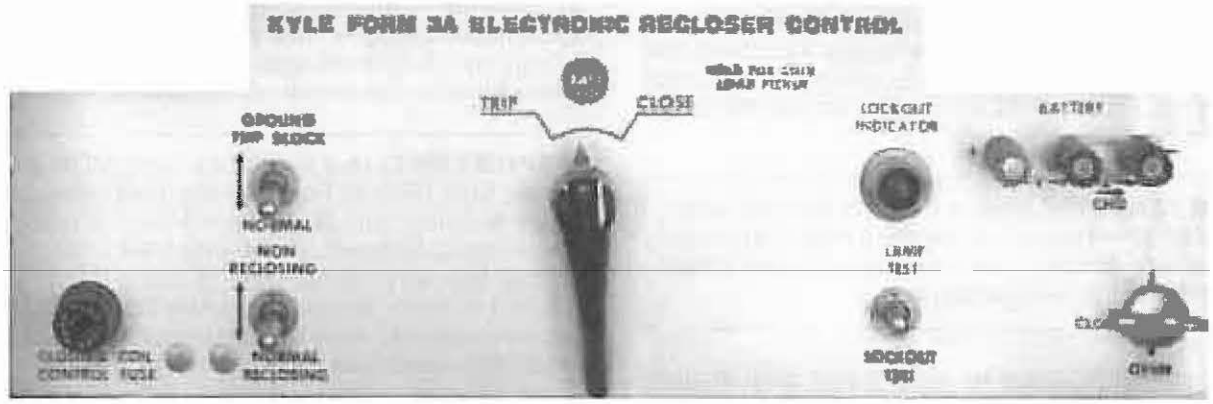

Figure 14.
Lower Portion of Front Panel of Control.

9110068KMA-CD

Reset Timed from First Trip Operation

The Form 3A control can be converted to reset-timed-from-first-trip operation, if so desired, by removing a jumper on the tie board and moving a lead from the push-on tab labeled RECLOSE to an adjacent tab labeled HOME (Figure 13). However, under this reset mode, the time selected must exceed the longest possible tripping and reclosing sequence that can be experienced. Minimum-fault currents (which provide the longest tripping times) must be considered.

Operating Switches and Indicators

The switches and indicators for manual operation and service are grouped on the lower, light colored portion of the control panel (Figure 14).

Manual Control Switch

Located in the center of the lower panel, the manual control switch enables manual closing and tripping of the recloser. Moving the switch to TRIP opens the recloser, locks out the control, and disconnects the battery from the control circuits. Moving the switch to CLOSE reconnects the battery, resets the control to home, and closes the recloser.

A cold-load pickup feature is built into this switch. Holding the switch in CLOSE will disconnect the no. 1 timing plug for both phase and ground trip and set the control to operate on the slower no. 2 plugs. While the switch is held in this position, the control is still free to trip and lock out if closed into a fault. However, all operations to lockout will occur on the no. 2 trip-timing plugs.

Ground-Trip Operation Switch

The ground-trip operation of the control is disabled when this switch is set to BLOCK. Blocking ground-trip operations is useful during known periods of three-phase load unbalance and while performing single-phase testing or switching.

Non-Reclosing/Normal Reclosing Switch

WARNING: This equipment is not intended to protect human life. Follow all locally approved procedures and safety practices when installing or operating this equipment. Failure to comply can result in death, severe personal injury and equipment damage.

G102.1

To meet specific local safety requirements during startup or service restoration, the control can be set to block reclosing after an automatic trip (one-shot-to-lockout operation) by setting the operating mode switch to NON-RECLOSING. Returning this switch to NORMAL RECLOSING after a successful reclose will ready the control for its full programmed operating sequence.

Lockout Indicator

Verification of control lockout consists of an indicator lamp and a momentary double-throw toggle switch. In the LOCKOUT TEST position, the lamp will light if the control is locked out; the LAMP TEST position verifies the condition of the lamp.

IMPORTANT: The lockout indicator will only accurately reflect the state of the control. It does not monitor the recloser mechanism and may not accurately reflect the position of the recloser contacts.

Proper verification of the recloser status must include examination of both the control lockout indicator and a visual check of the position of the mechanical contact position indicator on the recloser.

Battery Terminals

These terminals provide a means for checking the condition of the battery. Refer to the **Battery Check Procedures** in the **Control Battery** section in this manual.

Closing Coil Control Fuse

On solenoid-operated reclosers, the fuse will open the closing circuit to protect the potential closing coil in the recloser if closing cannot be accomplished due to low closing voltage. On motor-operated reclosers, the fuse is connected in series with the closing circuit contactor in the recloser.

A Buss Type MDQ-3/8 amp, 250 volt fuse, manufactured by Bussman Manufacturing is used and a box of five spare fuses is supplied with each control. Fuses of similar ratings by other manufacturers have slightly different characteristics and should not be used for replacement.

IMPORTANT: Use only Buss Type MDQ-3/8 amp fuses. Until 1988, all Form 3A and most earlier controls were supplied with Buss Type MDL-3/8 amp fuses. Buss has redesigned and changed the characteristics of that fuse and it is no longer suitable for use on any Form 3 or Form 3A control. Failure to use proper closing coil control fuse will result in unnecessary fuse operation and prevent the recloser from closing.

Note: In 1988, Buss redesigned the MDL-2.5 amp fuse that is used on controls shipped with reclosers having "quick-close" mechanisms such as Type VSO reclosers. The characteristics of the new single element MDL-2.5 fuse do not affect the application in the control. Buss will also continue to manufacture the original dual element version of the fuse under the new designation of MDQ-2.5. The MDQ-2.5 amp fuse will be supplied with controls for this application. Both the MDL-2.5 amp fuse and the MDQ-2.5 amp fuse are acceptable for this application.

INSTALLATION PROCEDURE

This control is used in conjunction with a Kyle electronically controlled recloser. Installation instructions for the recloser are packed with the recloser. Refer to the appropriate recloser installation manual when installing the control and recloser.

Mounting the Control

The Form 3A Type ME electronic recloser control can be mounted at any convenient, accessible location near, or remote from, the recloser.

1. For pole-mounted installations, this is normally near the base of the pole.
2. For substation installations, brackets are available as a mounting frame accessory for mounting the control to the substation frame.

Limits on control cable length determine the maximum distance between the control and recloser: up to 125 feet for solenoid-operated reclosers RVE, RXE, VWVE27, VWVE38, WE, WVE; up to 35 feet for motor-operated reclosers CXE, VSA12, VSA16, VSA20, and VSML.

Outline, mounting, and knockout dimensions are shown in Figure 15 for the standard control cabinet and Figure 16 for the double-size control cabinet.

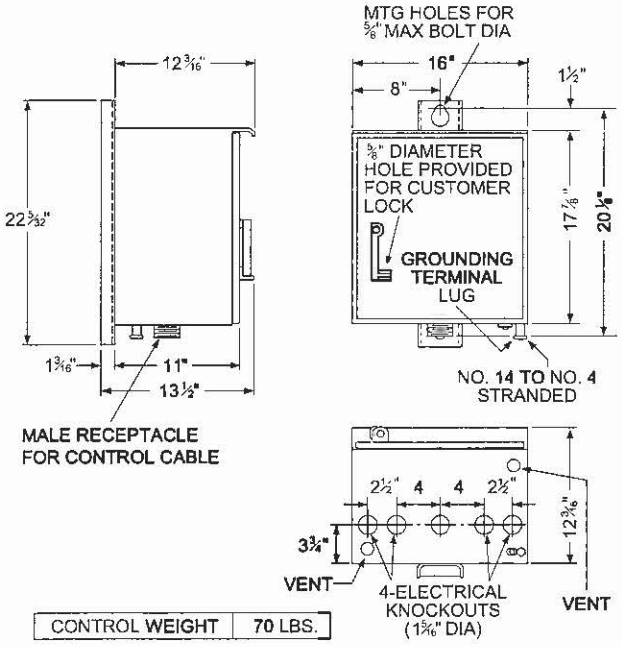

Figure 15.
Standard Cabinet Mounting Dimensions.

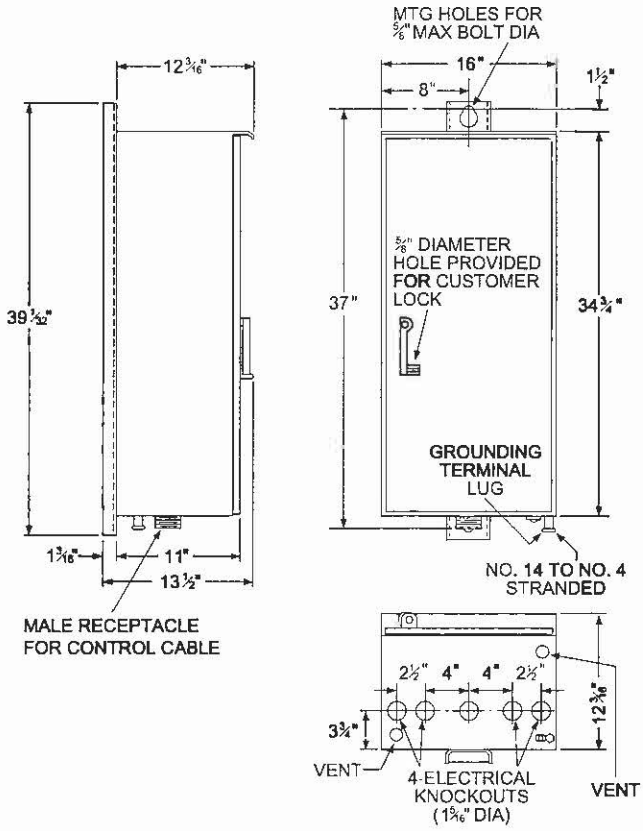

Figure 16.
Double-size Cabinet Mounting Dimensions.

Grounding the Control

The control cabinet must be grounded. A grounding connector on the underside of the cabinet will accommodate no. 14 solid through no. 4 stranded conductors. (Figures 15 and 16). Be sure to follow all locally approved grounding procedures when installing the control. Suggested methods for grounding the control are shown in Figures 17 and 18.

The installation must meet the following requirements:

1. The recloser and transformer are protected with lightning arresters.
2. The transformer tank is grounded.
3. The recloser head is grounded.
4. Secondary cables must be shielded or Triplex cables.

Note: If the control is mounted on a recloser frame which itself is grounded, a separate lead from the cabinet to earth ground is not required but may be added.

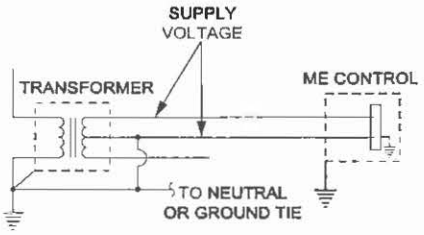

ELECTRICAL CONNECTIONS

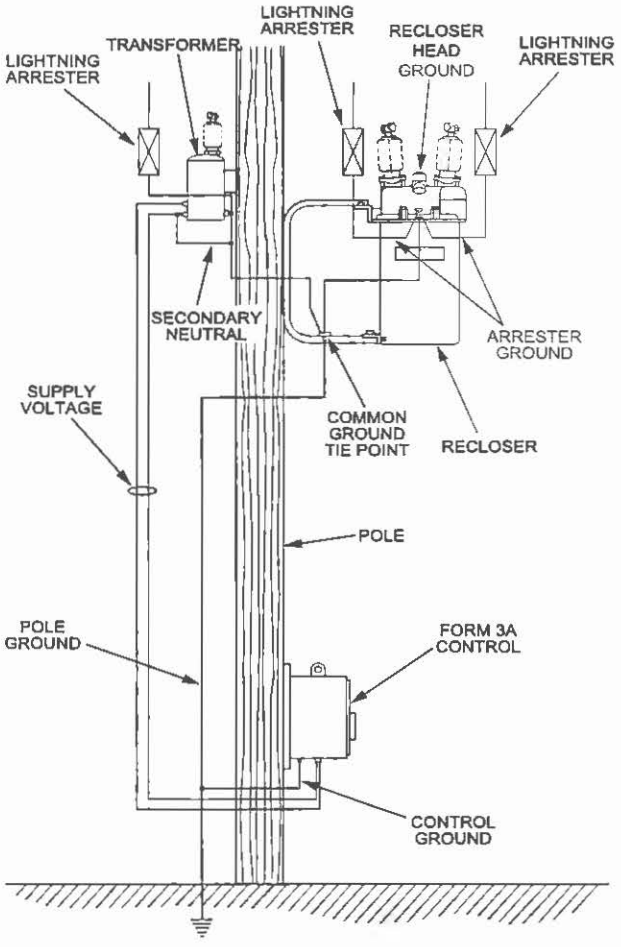

Figure 17.
Recommended Grounding Method for Form 3A Control with Local Supply Voltage Transformer.

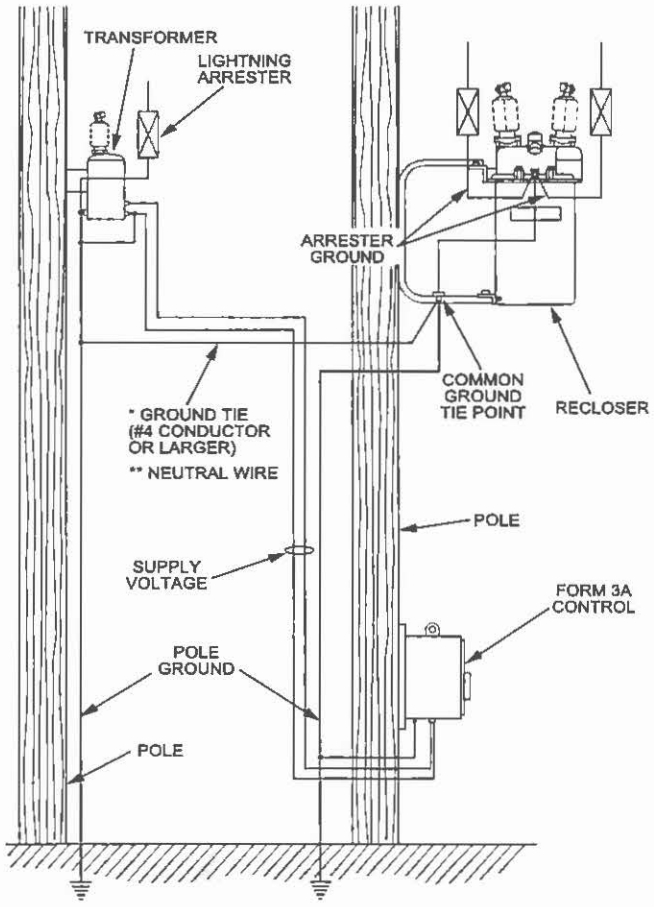

*3 WIRE UNIGROUNDED SYSTEM

** 4 WIRE SYSTEM

Figure 18.
Recommended Grounding Method for Form 3A Control with Remote Supply Voltage Transformer.

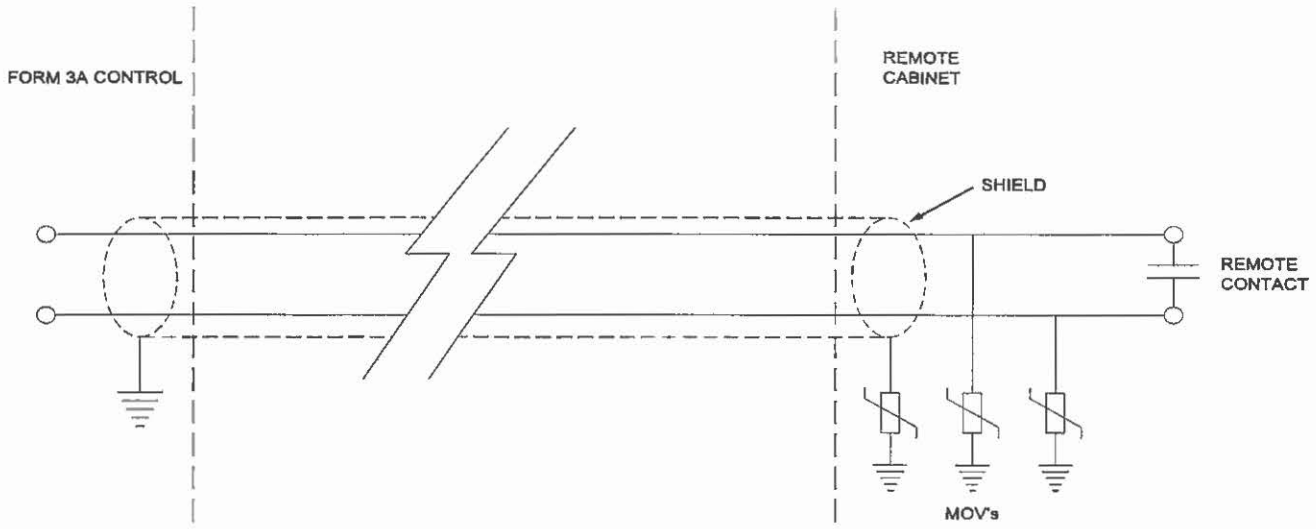

Figure 19.
Shielding and Surge Protection of Remote Cables.

Control Cable

A 7 ft. cable is furnished as standard with the control-recloser package. This length is sufficient for most substation mounting frame installations. For other installations, cable lengths as specified on the order are provided.

The cable is fabricated with connectors which mate with the female receptacle of the recloser on one end and the male receptacle of the control on the other.

Note: The control cable must be supported along its length to prevent repeated movement due to wind or other outside forces which can damage the cable.

Shielding and Surge Protection of Remote Cables

All remote operation and control monitor leads should be protected within shielded cables. This is particularly important if the remote cables are routed near other cables or devices that emit strong magnetic fields. The cable shield must be grounded at the Form 3A control only, see Figure 19.

Note: In order to protect a remote device(s) from high-voltage surges, all remote operation and monitor leads must be protected with metal oxide varistors (MOV's), see Figure 19. Use Harris V320LA40B varistors, (320 Vac, 160 J), or equivalent.

Customer Connections Terminal Strip

WARNING: Hazardous Voltage. The ac supply common lead must be connected to the terminal labeled COMMON AC GND. If supply connections are reversed, the control cabinet will be at ac supply potential. Improper connection of the control supply could result in contact with high voltage, which will cause death or severe personal injury. T219.2

All Form 3A controls require 120 Vac auxiliary power to operate the battery charger and energize the control cabinet heater; both are standard features of the control.

Auxiliary power connections and connections for remote operation of certain accessories are made on a 14 point terminal strip mounted vertically on the back panel of the control. Figure 20 shows two partial detail views of the terminal strip to indicate the customary connection terminals for the various accessories. However, deviations may occur to accomodate certain combinations of accessories. All terminals for required connections are clearly marked.

The minus side of the 24 Vdc control circuit is grounded to the cabinet at the input cable receptacle card in the bottom of the cabinet by a white jumper lead connected between tabs GND and BATT-. When an external dc power source accessory is used instead of the battery, remove the jumper to make sure there is no interaction between station ground and earth ground.

Note: A 27 ohm resistor on the receptacle card, in series with the grounding jumper lead, will limit the short-circuit current to nondestructive levels in case of momentary accidental grounding of the plus side of the circuit. A sustained short will cause the resistor to overheat and eventually burn out. This condition, however, will not affect control operation.

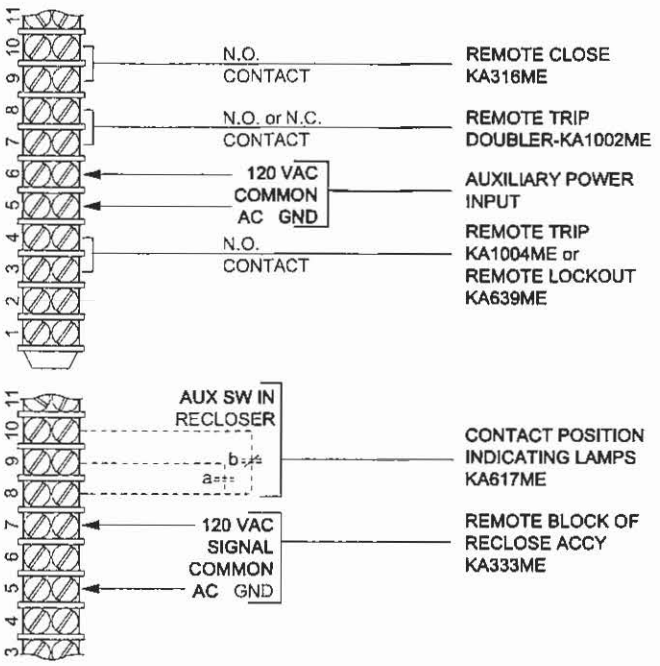

Figure 20.
Typical Accessory Locations on Customer Connections Terminal Strip.

Control / Recloser Interchangeability

Since a temperature-regulated, 120 Vac, potential-type battery charger is a standard feature of the Form 3A electronic control, the battery charger is not included as a standard feature of the companion electronically controlled reclosers. It is, however, available as a factory installed accessory for these reclosers. Care must be exercised when interchanging "new-style" controls (Form 3A) and "old style" controls (Form 3) with "new style" reclosers (without battery recharger) and "old style" reclosers (with battery charger as standard) to make sure that each combination has an operational battery charger.

The Form 3A control, or the Form 3 control equipped with a battery charger accessory, is compatible with all old- and new-style reclosers provided 120 Vac power is available at the control.

If 120 Vac is not available at the control, the Form 3A control can be made compatible with any old-style recloser by changing the connections on the input receptacle card as shown in Figure 21 to connect the battery charger in the recloser to the control.

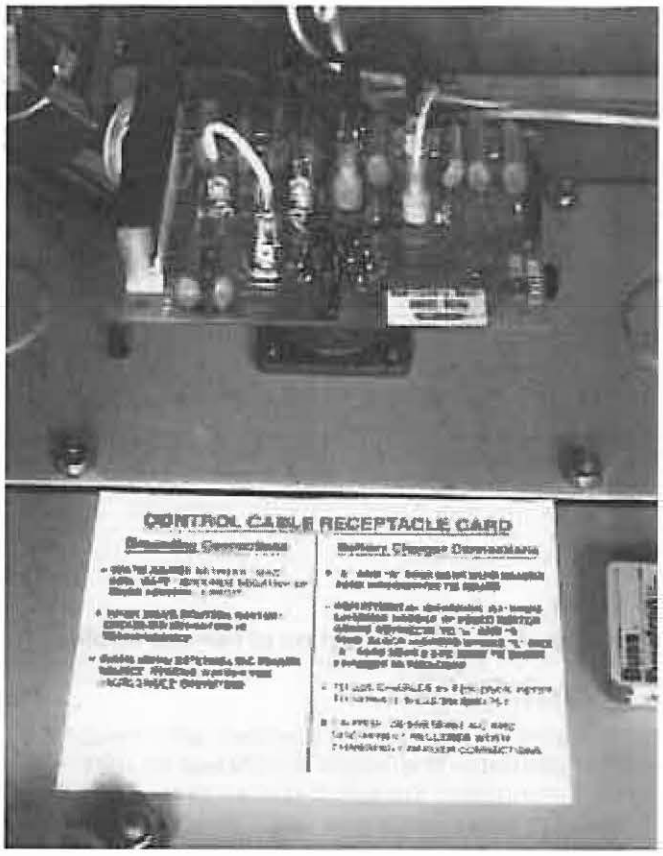

911071KMA-F

Figure 21.
To use Charger in Recloser, Jumpers on Control Cable Receptacle Card must be changed.

If 120 Vac is not available at the control, the new-style recloser must be equipped with its battery charger accessory to be compatible with the Form 3A control. The combination of a Form 3 control, without the battery charger accessory, and a new-style recloser does not have an operational battery charger. To make this combination compatible, either the control or the recloser must be equipped with its battery charger accessory (depending on whether 120 Vac is or is not available at the control).

Tables 2 and 3 summarize the various recloser/control combinations.

Table 2
120 Vac Available At Control

Control	Recloser	Compatible?	Remarks
Form 3A (Above Serial No. 26000)	New Style (No Battery Charger)	Yes	
	Old Style (Battery Charger Std)	Yes	
Form 3 With Battery Charger Accessory (Below Serial No. 26000)	New Style (No Battery Charger)	Yes	
	Old Style (Battery Charger Std)	Yes	
Form 3 Without Battery Charger Accessory (Below Serial No. 26000)	New Style (No Battery Charger)	No	Add battery charger accessory to control.
	Old Style (Battery Charger Std)	Yes	

Table 3
120 Vac Not Available At Control

Control	Recloser	Compatible?	Remarks
All Form 3A	New Style (No Battery Charger)	No	Use recloser equipped with battery charger accessory; reconnect input receptacle card in control for recloser charging.
	Old Style (Battery Charger Std)	No	Reconnect input receptacle card in control for recloser charging.
Form 3 With Battery Charger Accessory (Below Serial No. 26000)	New Style (No Battery Charger)	No	Use recloser equipped with battery charger accessory; disconnect battery charger accessory in control; reconnect control for recloser charging.
	Old Style (Battery Charger Std)	No	Disconnect battery charger accessory in control; reconnect control for recloser charging.
Form 3 Without Battery Charger Accessory (Below Serial No. 26000)	New Style (No Battery Charger)	No	Use recloser equipped with battery charger accessory.
	Old Style (Battery Charger Std)	Yes	

For identification, Table 4 lists the serial number breaks between old-style and new-style reclosers. Below this serial number, the recloser is equipped with a battery charger as standard; above this serial number, there is no battery charger in the recloser.

Table 4
Serial Number Break for New Style Reclosers Without Battery Chargers

Recloser	Serial No.	Recloser	Serial No.
CXE	1100	VSAT	300
ME	650	VSML	325
MLE	470	VSMT	150
MVE	375	VSR	350
RVE	2500	VWE	2100
RXE	900	VWVE	1500
VSA	2925	WE	6800
VSO	100	WVE	1200

New-style reclosers without battery chargers are identified with the following instruction label prominently displayed on the sleet hood or the front of the operator cabinet:

NO BATTERY CHARGER IN THIS RECLOSER. USE WITH FORM 3A OR CONTROL CONTAINING POTENTIAL BATTERY CHARGER.

If a new-style recloser is equipped with a battery charger, the following label is used:

THIS RECLOSER EQUIPPED WITH BATTERY CHARGER

Accessories

A number of accessories are available to further extend the operating flexibility of the Form 3A electronic control and broaden its application capabilities. The Accessory List Location Guide label attached to the inside of the cabinet door (Figure 22) lists the accessories included in the control, shows their approximate physical location, and identifies each accessory with a number corresponding to the index number on the label.

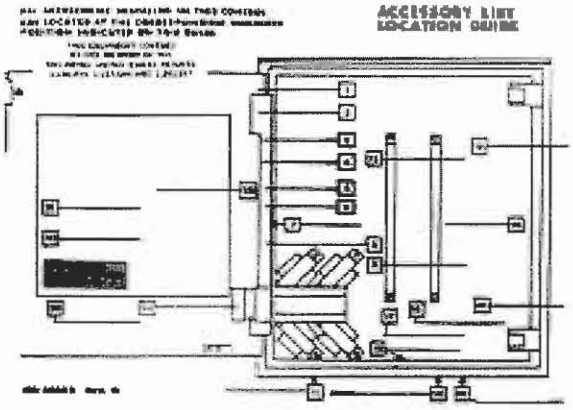

911072KMA-F

Figure 22.
Accessory Location Guide Label Mounted inside Cabinet Door Identifies and Locates all Control Accessories.

Separate *Service Information* bulletins provide the installation, operating, testing, troubleshooting instructions for the accessories furnished with each control.

Table 5 lists Form 3A control accessories, catalog numbers and *Service Information* bulletin numbers.

IMPORTANT: Although it may be desirable under certain conditions to operate control accessories in parallel from a single remote contact, this is generally not possible. Cooper Power Systems does not advise interconnection between controls because of possible control interaction.

CAUTION: Equipment damage. Each remote operation accessory installed in the control requires two wires for operation. For example, if both remote close and remote lockout are installed, they require four wires. Using three wires will cause misoperation and/or control damage. T220.0

Verification Procedure Prior to Placing Control and Recloser into Service

Prior to placing the control and its recloser into service, make sure that all the following installation procedures have been properly completed and verified.

1. Control properly mounted for the installation.
2. Recloser installed according to all locally approved utility practices.
3. Control and recloser properly grounded in accordance with guidelines in this manual.
4. 120 Vac connected to control.
5. Control battery connected and tested for proper operation.
6. All control plug-in components properly installed and programming verified by appropriate personnel.
7. Customer connections for remote and supervisory operation checked and completed in accordance with shielding and surge protection instructions in this manual.
8. Control cable properly connected and supported.

Table 5
Form 3A Type ME Electronic Control Accessory Manuals

Accessory Catalog No.	Accessory Description	Service Information Number
KA333ME	Reclose-Blocking	S280-75-36
KA418ME7	Sequence Coordination	S280-75-37
KA531ME	Fuse Elimination	S280-75-44
KA542ME	Thermostatically Controlled Heater	S280-75-39
KA1002ME	Minimum-Trip Doubler	S280-75-21
KA1036ME	Instantaneous Lockout	S280-75-33
KA1037ME	Instantaneous Trip	S280-75-25
KA1119ME	Capacitor Backup Trip	S280-75-48
KA1137ME	Target Annunciator	S280-75-41
KA1163ME	Minimum Response Time	S280-75-42
KA2003ME	Remote Close with Cold Load Pickup	S280-75-49
KA2035ME2	Remote Non-Reclose and Ground Trip Block Maintained Contact	S280-75-52
KA2039ME	Recloser Status	S280-75-51
KA2047ME	Remote Battery Test and Voltage Monitor	S280-75-57
KA2070ME	Remote Close with Cold-Load Pickup, Remote Lockout, and Recloser Status	S280-75-55
KA2071ME	Remote Non-Reclose and Ground Trip Block Momentary Contact	S280-75-53
KA2072ME	Remote Battery Test and Voltage Monitor Analog Output	S280-75-56
KA2075ME	Closing Coil Control Fuse	S280-75-62
KA2272ME	Analog Current Metering	S280-75-63

TESTING PROCEDURES

Testing with Type MET Tester

The Kyle Type MET Electronic Recloser Control Tester (Figure 23) has been designed specifically for testing Form 3A controls. The MET Tester is completely self-contained, includes all necessary metering and interconnecting cables, and is capable of performing all required checks and tests from a simple verification of operation to a complete verification of operation of all operating parameters. Operating instructions for the Type MET Tester are contained in *Service Information S280-76-1.*

86841KMA-F

Figure 23.
Kyle Type MET Electronic Recloser Control Tester.

If an MET Tester is not available, the following test procedures, ranging in complexity from a simple check of coordinated control-recloser operation to a verification of the various control settings, may be performed:

- For a simple check of coordinated control-recloser operation, the output of a soldering gun (with the tip removed) connected across a minimum-trip resistor will provide a signal of sufficient strength to simulate a fault current and operate the control. Refer to the **Soldering-Gun Test** section in this manual.
- To verify minimum trip, timing, and operating sequence, an equivalent test current which simulates the output of the sensing CTs can be introduced directly into the control. Refer to the **Testing with Simulated Current** section of this manual.
- To verify the control settings and check the sensing CTs, a variable, low-voltage test current simulating fault conditions can be passed through one phase of the recloser. Refer to the **Testing with Low-Voltage Current** section of this manual.

Testing an Installed Control

A recloser control can be taken out of service for testing and placed back in service without deenergizing its recloser and interrupting the system. However, during the time the control is out of service, system fault protection is lost.

CAUTION: Recloser misoperation. The control must be removed from service prior to performing any maintenance, testing or programming changes. Failure to comply can result in misoperation (unintentional operation) of the recloser. T216.2

To Remove Control from Service

Prior to testing, changing plug-in components, performing control maintenance, making program changes, or battery replacement on an in-service control, the following steps must be taken to prevent possible recloser misoperation.

1. Switch Ground Trip Block switch to BLOCK.
2. Disconnect control cable from control.
3. De-energize potential battery charger, by opening the battery charger fuse block switch (shown in Figure 4.)
4. Operate the Manual Control switch to OPEN.
5. Unplug the control battery.

To Return the Control to Service

After required work is completed, return the control to service with the following steps:

1. Check that all plug-ins are properly installed and control settings are correct.
2. Connect control battery.
3. Close the battery charger fuse block switch to energize the potential battery charger.
4. Move Manual Control switch to CLOSE, to ensure that control is reset to the home position.
5. Reconnect control cable to control.
6. Switch Ground Trip Block switch to NORMAL.

Closing the Recloser

Electrical Closing - RVE, RXE, VWE, VWVE27, VWVE38, WE, and WVE Reclosers

For automatic operation, line voltage is required to operate the closing solenoid of RVE, RXE, VWE, VWVE27, VWVE38, WE, and WVE reclosers (except for reclosers equipped with the low voltage closing accessory).

WARNING: Hazardous voltage. **Interconnect** source leads X and Y and ground solidly to the recloser tank. Do not connect lead Z to any other phase or mechanical ground. Dangerous voltages to ground exist on the phase connected to lead Z. Solidly ground all equipment. Failure to comply can result in severe personal injury and/or equipment damage. T224.1

For on-line testing, bypass the recloser, open the load-side disconnects, but keep the source-side disconnects closed. This will remove the recloser from service, but will keep line voltage supplied to the closing solenoid. See Figure 24.

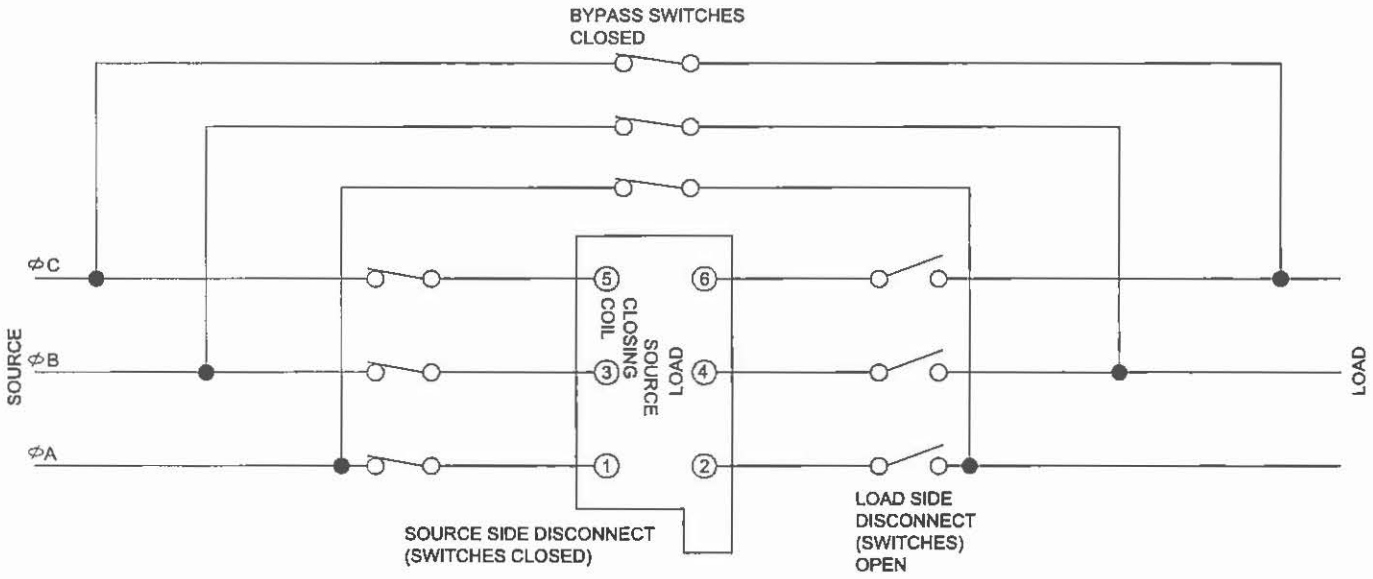

Figure 24.
Closing-Source Side Switches of a Bypassed, On-line Recloser will Provide Closing Solenoid Power for Automatic Operation During Testing.

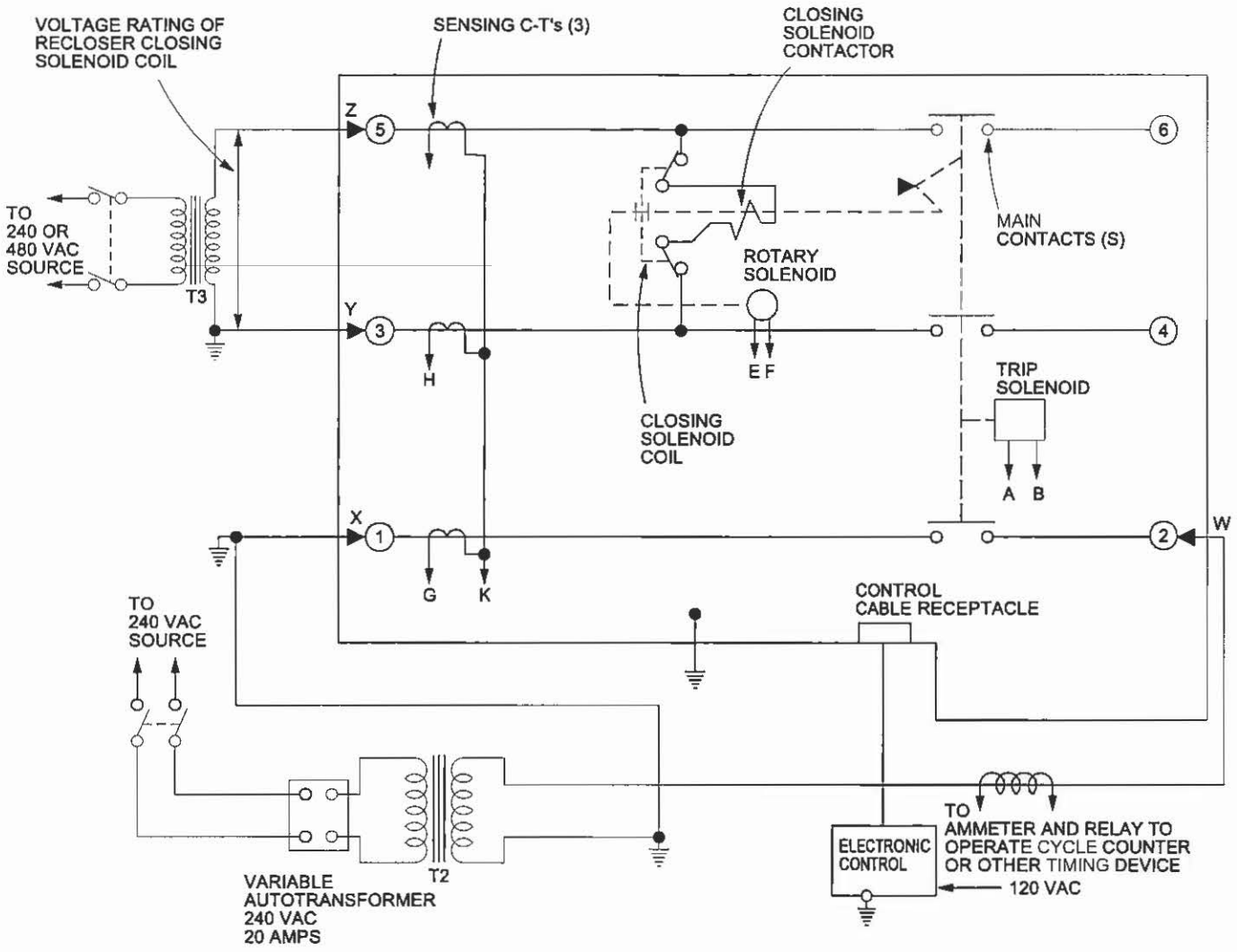

Figure 25.
Suggested Test Circuit for Solenoid Closing Reclosers.

WARNING: Hazardous voltage. The switchgear and high-voltage transformer must be in a test cage or similar protective device to prevent accidental contact with the high-voltage parts. Solidly ground all equipment. Failure to comply can result in death, severe personal injury, and equipment damage. T221.3

For shop testing, the closing solenoid voltage can be supplied by back-feeding a transformer with a low-side rating equal to the voltage rating of an available power source and a high-side rating equal to the voltage rating of the recloser. This procedure is not to be used on reclosers equipped with the low-voltage closing accessory, see Figure 25. Make sure the solenoid coil operating voltage is maintained at the recloser bushings during the two-to-three cycle interval the closing coil is energized. In general, a 75 kVA transformer of the proper voltage rating with an impedance drop of about 3% will be satisfactory. The source impedance must also be reasonably low. The closing coil requirement is approximately 200 kVA during the two-to-three cycle closing operation.

Electrical Closing - CXE, VSA, VSO, and VSML Reclosers

CXE, ME, VSA, VSO, and VSML reclosers utilize a motor-operated closing mechanism which is energized from a 230 Vac power source; no high-voltage is required.

Manual Closing - Solenoid-Operated Reclosers

If high-voltage for operating the closing solenoid of RVE, RXE, VWE, VWVE27, VWVE38, WE, and WVE reclosers is not available, manual closing can be substituted for electrical closing; however, not all control settings can be checked since manual closing is not synchronized with the closing coil control circuit in the control.

IMPORTANT: If manual closing is not performed within the reclosing interval of the control, the closing coil control fuse will blow. To prevent this from occuring, remove the fuse during manual closing procedures.

To manually close the recloser:

WARNING: Explosion Hazard. Excessive Contact Arcing. Do not use the manual closing tool to close an oil-insulated energized recloser. Closing an energized oil-insulated recloser with a manual closing tool can cause excessive contact arcing, rapid build-up of gas within the equipment, and possible explosion that can cause death, severe personal injury, and equipment damage. T203.2

1. Remove the closing tool port cover and gasket from the side of the recloser head casting.

CAUTION: Equipment damage. Do not turn the manual closing tool more than one-quarter turn clockwise. Forcing the tool beyond the mechanism stop may shear the pin on the closing shaft of the recloser. T222.0

2. Insert the KA90R T-handled tool (available as an accessory) into the port, engaging the pin on the closing shaft. (Figure 26).
3. Close the recloser by placing the yellow operating handle (under the sleet hood) into the up or CLOSED position and turning the closing tool one-quarter turn clockwise.
4. After each trip operation, about ½ second will elapse while the closing solenoid plunger is moving upward to reset the main toggle latch.
5. After the main toggle latch resets, the recloser can be closed again by operating the manual closing tool.
6. Replace the gasket and port cover on the recloser head after testing has been completed.
7. Reinstall the control closing coil fuse.

Soldering-Gun Test

The output of a soldering gun (Weller Model 550 or equivalent) will produce a signal of sufficient strength to simulate a fault and check recloser-control operation. To solder-gun test a control:

1. Set the Non-Reclose/Normal Reclose switch on the control to NORMAL reclosing and the Ground Trip Block switch to NORMAL.
2. Move the manual control switch on the control panel to TRIP, to open the recloser contacts.
3. Remove the tip from the posts of the soldering gun by loosening the hexagonal locking nuts.
4. Connect a short clip lead to each post and connect the soldering gun across the Phase A minimum trip resistor as shown in Figure 27.
5. Move the manual control switch on the control panel to CLOSE. The recloser should close.
6. Energize the soldering gun by depressing and holding the trigger until the recloser trips.
7. **Immediately** release the trigger to prevent instantaneous trips on succeeding reclosings.
8. When the recloser recloses, again energize the soldering gun and repeat Steps 5 and 6 until the control locks out. Count the number of fast and delayed trip operations and compare the count with the control settings. Verify lockout with the switch on the operator panel.
9. Repeat on Phases B and C and Ground if desired.

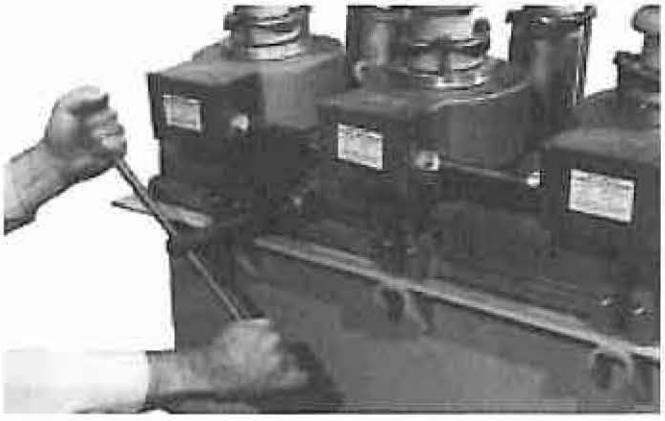

82284KMA-F

Figure 26.
Using a KA90R Manual Closing Tool to Operate the Recloser.

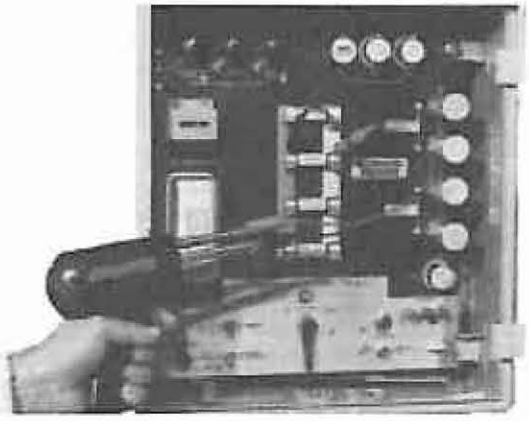

82290KMA-F

Figure 27.
The Output of a Soldering Gun can be used for a Quick-Check of Control-Recloser Operation.

Testing with Simulated Current

The Form 3A electronic recloser control continuously monitors line current conditions with three wye-connected 1000:1 ratio current transformers mounted internally on the source-side bushings of the recloser. These CTs are connected directly to three wye-connected phase minimum-trip resistors on the control panel. A fourth resistor (ground trip) is connected in the CT neutral to monitor zero-sequence current flow.

The current through any one of the minimum-trip resistors is 1/1000 of the line current. Therefore, if 1/1000 of the line current is applied directly to the resistor, the control will operate as if line current was flowing through the CT primary and one milliamp of test current will be equivalent to one amp of line current.

Note: The above applies to all but the VSA20, VSO20 and the discontinued Type ME and VSMT reclosers. These higher continuous-current-rated reclosers use 2000:1 ratio sensing CTs and special blue label minimum-trip resistors. For Type VSA20 AND VSO20 reclosers, *one milliamp* of test current is equivalent to *two amps* of line current. When testing controls equipped with blue label trip resistors, double the milliamp reading to obtain the equivalent line current.

Test Equipment

A test circuit to produce a variable output in equivalent amps is shown in Figure 28. This circuit will provide a fairly complete test of the control and recloser. All parts are standard and can be purchased through any electronics supply outlet.

Note: High voltage is required to operate the closing solenoid of Type RVE, RXE, VWE, VWVE27, VWVE38, WE, and WVE reclosers, unless they are equipped with the low voltage closing accessory. A 240 Vac power source is required to operate the motor of CXE, VSA, VSO, and VSML Reclosers. Various closing schemes are described in the **Closing the Recloser** section.

WARNING: Hazardous voltage. Solidly ground all equipment. Failure to comply can result in death, severe personal injury, and equipment damage. T223.2

Test Procedure

Coordinated Operation of Control and Recloser

1. Make certain that closing power is available at the recloser.
   - **A.** On solenoid-operated reclosers, move the yellow manual operating handle (located under the sleet hood) to the up position.
   - **B.** On motor-operated reclosers, move the TRIP-RESET lever or rod (located in the recloser operator cabinet) to RESET.
2. Set the operating mode switch on the control to NORMAL reclosing and the ground trip switch to NORMAL.
3. Move the manual control switch on the control panel to CLOSE. The recloser should close.
4. Move the manual control switch on the control panel to TRIP. The recloser should open.

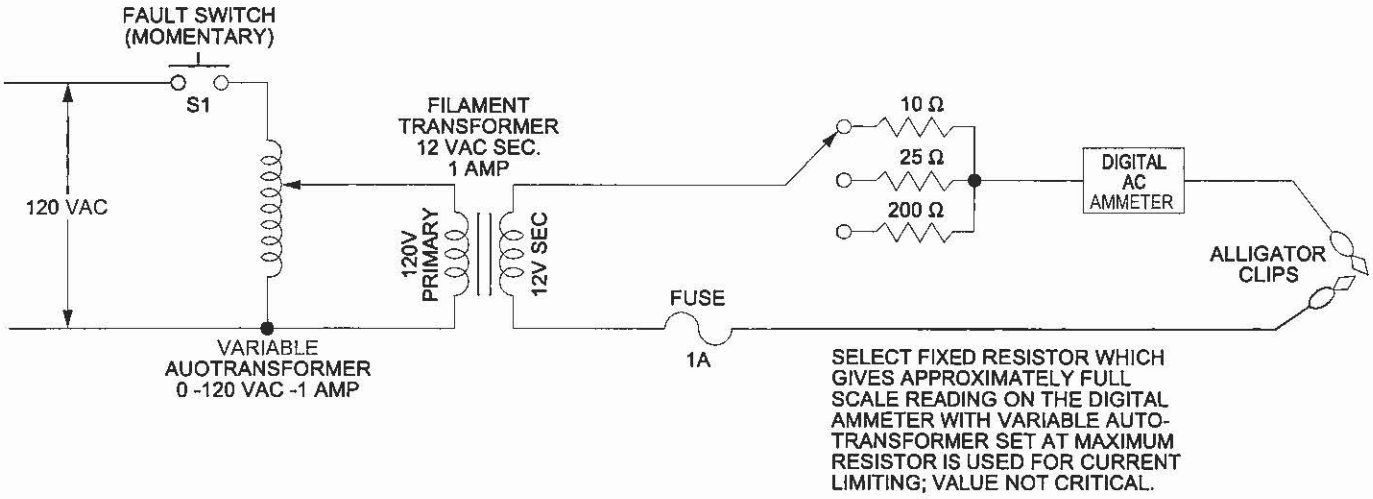

Figure 28.
Simulated Current Test Circuit.

Minimum-Trip Current

The minimum-trip current test should be performed on a fast time–current curve operation. The test will produce misleading results if the control is operating on a delayed TCC curve.

Note: If the control is equipped with the KA418ME7 sequence coordination accessory, refer to *Service Information S280-75-37* for additional information.

To test minimum-trip current:

1. Move the manual control switch to CLOSE to close the recloser.
2. Connect the output of the test circuit across the Phase A minimum trip resistor.
3. While holding fault switch S1 on the tester closed, slowly raise the test current from zero and note the meter reading when the recloser trips. This reading in milliamps should correspond to the trip resistor value in amps. For example, a 280 amp resistor should trip at 280 mA.
4. Release S1 before the recloser automatically recloses to prevent instantaneous trips on succeeding reclosings.
5. Repeat steps 1 through 4 for the Phase B, Phase C, and Ground trip resistors.

Trip Time

The trip times of the fast timing plugs (Sockets [1] and ◇1), are ordinarily too fast to check with a stopwatch with any accuracy. However, the delayed timing plugs (Sockets (2)) can be checked. To check the delayed timing plugs:

1. Move the manual control switch to TRIP to open the recloser.
2. Remove the RESET DELAY plug from the control panel.
3. Connect the output of the test circuit across the Phase A minimum trip resistor.
4. While holding Fault switch S1 closed, adjust the output to produce an equivalent test current of at least 150% of minimum trip. For example, a 420 mA test current for a 280 amp resistor.
5. Release S1 and move the manual control switch to CLOSE to close the recloser.
6. Close S1; the recloser should trip in a very short time.
7. Release S1 immediately and allow the recloser to close automatically.
8. Repeat Steps 6 and 7 for all fast operations to advance control operation to the delayed time-current curve.

   Note: The number of fast operations is determined by the setting of GROUND TRIP SOCKET [1] and PHASE TRIP SOCKET ◇1 switches in the upper left corner of the panel.

9. Close S1 and, at the same time, start a stopwatch.
10. When the recloser trips, stop the watch and release S1. Compare the time to the time at 150% of minimum trip on the published time–current curve for the timing plug being checked. For example, a B plug will clear in about 2.8 seconds at 150% minimum trip.
11. Repeat Steps 9 and 10 to lockout.
12. Repeat Steps 3 through 11 for the GROUND TRIP TIMING Plug (2).

Reclosing Time

To check reclosing time (the open interval of the recloser between trips):

1. Move the switch to CLOSE to close the recloser.
2. With the tester output connected across any one of the minimum-trip resistors and adjusted to produce an eqivalent test current of at least 150% of the minimum trip rating, close Fault Switch S1.
3. When the recloser trips, release S1 and start timing the interval the recloser is open, stopping when the recloser recloses. The time should correspond to the first RECLOSING INTERVAL DELAY plug setting.
4. Repeat Steps 2 and 3 to check the timing of the second and third RECLOSING INTERVAL DELAY plugs.
5. Replace the RESET PLUG on the control panel.

Reset Time – Timed from Successful Reclosure

Reset timed from a successful reclosure is standard on the Type ME Form 3A control. To check the reset time:

1. Move the manual control switch to CLOSE to close the recloser.
2. With the tester output connnected across any one of the minimum-trip resistors and adjusted to produce an equvalent test current of at least 150% of the minimun-trip rating, close Fault Switch S1.
3. When the recloser trips, release S1 and wait for the recloser to reclose automatically.
4. Start timing when the recloser closes and stop when the control resets automatically as indicated by an audible clicking as the sequence relay returns to home position.
5. The elapsed time should correspond to the setting of the RESET DELAY plug.

Reset Time-Timed From First Trip Operation

The Form 3A control can be converted to reset-timed-from-first-trip operation as described in the **Reset Delay Selector** section.

To check the timing of this reset mode:

1. Move the manual control switch to CLOSE to close the recloser.
2. With the tester output connected across any one of the minimum-trip resistors and adjusted to produce an equivalent test current of at least 150% of the minimum-trip rating of the resistor, close Fault Switch S1.
3. When the recloser trips, release S1 and start timing.
4. Continue timing after the recloser automatically recloses until the control resets automatically as indicated by an audible clicking as the sequence relay returns to its home position.
5. The elapsed time should correspond to the setting of the RESET DELAY plug.

Operation of the Non-Reclosing Switch

The non-reclosing switch provides one-trip-to-lockout capability without disturbing the normal operating sequence of the control. To check its operation:

1. Move the non-reclosing switch to NON-RECLOSING.
2. Move the manual control switch to CLOSE to close the recloser.
3. With the tester output connected across any one of the minimum-trip resistors and adjusted to produce an equivalent test current of at least 150% of the minimum-trip rating of the resistor, close Fault Switch S1.
4. The recloser should trip once and not reclose. The control should indicate lockout position when the LOCKOUT TEST switch is operated.

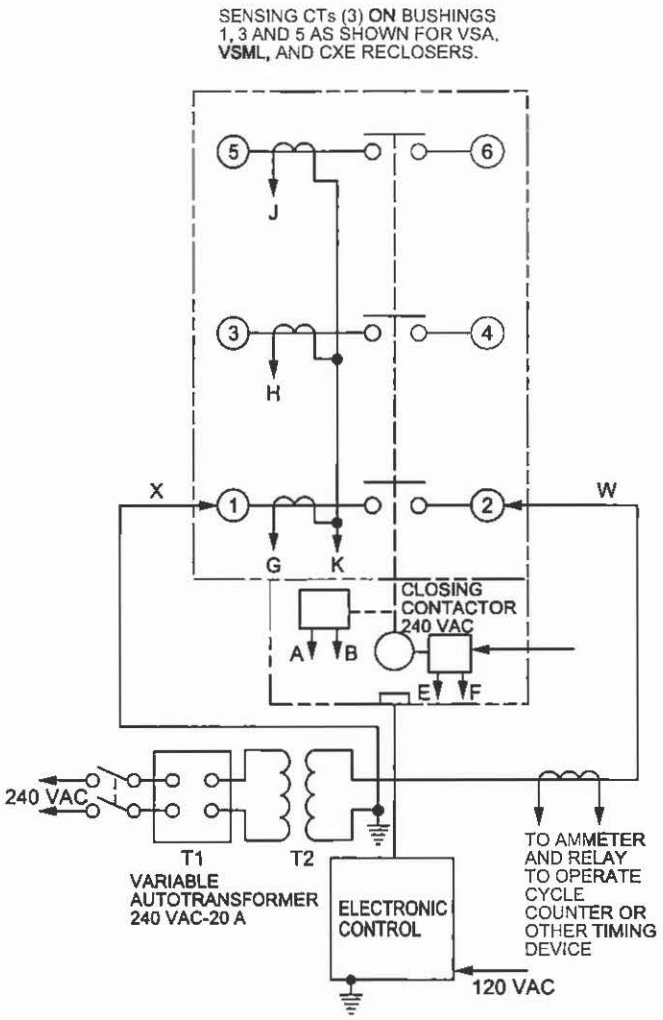

Figure 29.
Suggested Test Circuit for Motor Operated Reclosers.

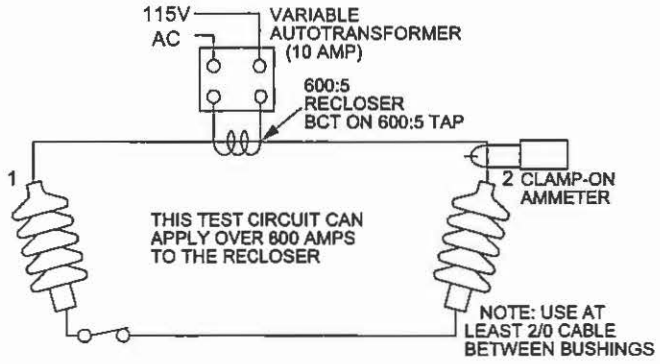

Figure 30.
Alternate Method of Producing Variable Line Current (Substitute for T2 and W-X Circuit in Figures 25 and 29).

Testing with Low-Voltage Current

The Form 3A recloser control-with its recloser-can be tested with a variable low-voltage current passing through one phase to simulate fault conditions.

Test Equipment RVE, RXE, VWE, VWVE27, VWVE38, WE, AND WVE Reclosers

WARNING: Hazardous voltage. The switchgear and high voltage transformer must be in a test cage or similar protective device to prevent accidental contact with the high voltage parts. Solidly ground all equipment. Failure to comply can result in death, severe personal injury, and equipment damage. T221.3

A test circuit for these solenoid-closed reclosers is shown in Figure 25. The following equipment is required for the recommended test setup:

Note: Solenoid-closed reclosers equipped with a 120- or 240-Vac low-voltage closing coil accessory can be tested as shown in Figure 29.

- Variable Autotransformer T1, 230 volts, 20 amps.
- Low-Voltage transformer T2 to simulate fault conditions.

  Ratio and size will depend upon the maximum current to be used. The recloser presents a low impedance to the transformer, so secondary voltage must be only high enough to force the required current through the secondary of the transformer and the recloser.

  Note: An alternative method of providing the necessary current through the transformer is shown in Figure 30.

- High-Voltage T3 to operate the closing solenoid. Refer to the **Closing the Recloser** section for high voltage transformer requirements.
- Ammeter with a rating based on the level of test current.
- Current-actuated timer or stopwatch.

Test Procedure

Test Current Applied to Phase A

WARNING: Hazardous voltage. Interconnect Source Leads X and Y and ground solidly to the recloser tank. Do not connect Lead Z to any other phase or mechanical ground. Dangerous voltages to ground exist on the phase connected to Lead Z. Solidly ground all equipment. Failure to comply can result in severe personal injury and/or equipment damage. T224.1

1. Assemble and connect the equipment as shown in Figure 25, which shows the test current being applied to Phase A, the phase nearest the sleet hood.
2. Verify that closing power is available at the recloser.
3. Move the yellow manual operating handle, located under the sleet hood, to the UP position.
4. Set the Non-Reclosing/Normal Reclosing switch on the control panel to NORMAL RECLOSING and the Ground Trip switch to BLOCK.
5. Move the manual control switch to CLOSE. The recloser should close, indicating correct operation of the control and recloser.
6. Move the manual control switch to TRIP. The recloser should open, verifying the electrical operation of the trip solenoid and the mechanical operation of the trip mechanism.

Test Procedure

Test Current Applied to Phase B and C

WARNING: Hazardous voltage. Dangerous voltages to ground exist on the phase connected to lead Z. De-energize high-voltage. Remove test leads Y and Z and solidly ground recloser tank prior to **applying** test current to phase B and **C.** Do not apply **high-voltage** to recloser while applying test current to phase B and **C;** transfer of high-voltage to low-voltage test circuitry will result. Failure to comply can result in death, severe personal injury, and/or equipment damage. T305

1. De-energize the high-voltage closing source and close the recloser manually before testing phase B and C. Refer to the **Manual Closing** procedure in the **Closing the Recloser** section of this manual.
2. Verify that closing power is available at the recloser.
3. Move the yellow manual operating handle, located under the sleet hood, to the UP position.
4. Set the Non-Reclosing/Normal Reclosing switch on the control panel to NORMAL RECLOSING and the Ground Trip switch to BLOCK.
5. Move the manual control switch to CLOSE. The recloser should close, indicating correct operation of the control and recloser.
6. Move the manual control switch to TRIP. The recloser should open, verifying the electrical operation of the trip solenoid and the mechanical operation of the trip mechanism.

Test Equipment CXE, VSA, VSO, and VSML Reclosers

A test circuit for these motor-operated reclosers is shown in Figure 29. Since these reclosers require only a 240 Vac source for closing, High-Voltage Transformer T3 and its associated protective cage is eliminated, but all other equipment is the same as the test equipment shown in Figure 25.

Test Procedure

Coordinated Operation of Control and Recloser

1. Assemble and connect the equipment as shown in Figure 29.
2. Verify that closing power is available at the recloser.
3. Move the TRIP-RESET lever or rod, located in the recloser operator cabinet, to RESET.

4. Set the Non-Reclosing/Normal Reclosing switch on the control panel to NORMAL RECLOSING and the Ground Trip switch to BLOCK.
5. Move the manual control switch to CLOSE. The recloser should close, indicating correct operation of the control and recloser.
6. Move the manual control switch to TRIP. The recloser should open, verifying the electrical operation of the trip solenoid and the mechanical operation of the trip mechanism.

Minimum-Trip Current

The minimum-trip test should be performed on a fast time–current curve. The test will produce misleading results if the control is operating on a delayed time–current curve.

Note: If the control is equipped with the KA418ME7 sequence coordination accessory, refer to *Service Information S280-75-37* for additional information.

To test the minimum-trip current:

1. Move the manual control switch to CLOSE to close the recloser.
2. With the test circuit connected to Phase A, energize T1, slowly raise the test current from zero, and note the meter reading when the recloser trips. This reading should correspond to the minimum current rating of the Phase A trip resistor.
3. After the recloser trips, turn T1 back to zero and move the manual control switch to TRIP to lockout the recloser.
4. Repeat Steps 1 through 3 for Phase B and Phase C trip resistors.
5. To check the minimum ground-trip resistor, place the ground-trip switch to NORMAL and repeat Steps 1 through 3.

IMPORTANT: Before checking the Phase B and Phase C trip resistors on solenoid-operating reclosers, de-energize the high-voltage closing source and close the recloser manually. Refer to the **Manual Closing** of the **Closing the Reclosers** section of this manual.

Note: The single-phase fault test current will appear as a phase-to-ground fault to the control. Therefore, when checking ground settings, jumper the minimum-trip resistor of the energized phase to block phase-trip operations.

Trip Time

If an electrically operated timer is used, both the fast and delayed time–current curves can be checked; however, the trip times of the fast timing plugs (sockets [1] and <1>) are ordinarily too fast to check with a stop watch with any reasonable accuracy. To check the trip times:

1. Move the manual control switch to CLOSE to close the recloser.
2. With the ground-trip switch set on BLOCK, connect a short clip lead across the minimum-trip resistor of the phase being tested to prevent tripping of the recloser while the test current is being adjusted.
3. Energize T1 and adjust the current for 150% of minimum-trip rating.
4. Without disturbing the setting of T1, deenergize T1.
5. Remove the jumper from across the minimum-trip resistor.
6. Keeping T1 at the desired setting, energize T1 and record the tripping times as the recloser operates to lockout. These times should correspond to the times at 150% of minimum-trip on the published time–current curves for the timing plugs being checked. Delayed times can be measured with a stopwatch.
7. To check the ground-trip timing plugs, place the ground-trip switch to NORMAL and repeat Steps 1 through 6.

   Note: The single-phase fault test current will appear as a phase-to-ground fault to the control. Therefore, when checking ground settings, jumper to the minimum-trip resistor of the energized phase to block phase-trip operations.
8. Return the ground-trip switch to BLOCK after the test has been completed.

Reclosing Time

To check reclosing time, which is the open interval of the recloser between trips:

1. Move the manual control switch to CLOSE to close the recloser.
2. Energize T1 and adjust T1 to produce a current in excess of the phase minimum-trip value.
3. When the recloser trips, time the interval until the recloser recloses.
4. Time the second and third open interval in the same manner.
5. The times should correspond to the first, second, and third RECLOSING INTERVAL DELAY plug settings, respectively.

Reset Time Timed from Successful Reclosure

Reset timed from successful reclosure is standard on the Type ME Form 3A control. To check the reset time:

1. Move the manual control switch to CLOSE to close the recloser.
2. With T1 adjusted to produce a current in excess of the minimum-trip value, energize T1.
3. When the recloser trips, deenergize T1 and wait for the recloser to reclose automatically.
4. Start timing when the recloser recloses and stop timing when the control resets automatically as indicated by an audible clicking as the sequence relay returns to the home position.
5. The elapsed time should correspond to the setting of the RESET DELAY PLUG.

Operation of the Non-Reclosing Switch

The non-reclosing switch provides one-trip-to-lockout capability without disturbing the normal operating sequence setting of the control. To check its operation:

1. Set the non-reclosing switch to NON-RECLOSING.
2. Move the manual control switch to CLOSE to close the recloser.
3. With T1 adjusted to produce a current in excess of the minimum-trip value, energize T1.
4. The recloser should trip once, and the control should indicate lockout position when the LOCKOUT TEST switch is operated.

Testing RVE, RXE, VWE, VWVE27, VWVE38, WE, and WVE Reclosers with Manual Closing

Testing procedures for minimum-trip current, time–current curve time, reset time timed for successful reclose, reset time timed from first operation, and operation of the non-reclosing switch are the same as testing per the **Testing with Simulated Current** procedure section except for Type RVE, RXE, VWE, VWVE27, VWVE38, WE, and WVE reclosers. These reclosers will not close automatically. They must be manually closed after each trip operation.

For the **Manual Closing Procedure**, refer to the **Closing the Recloser** section of this manual.

When testing reclosers with manual closing, the following additional precautions must also be observed:

1. Since manual closing is not synchronized with the closing coil control circuit in the control, the control fuse will blow if manual closing is not performed within the reclosing interval. To prevent damage, remove the fuse during testing.
2. If the control is operating in the reset-after-first-trip mode, the reset-delay plug may be removed from the control for all testing except reset time timed from successful reclose and reset time timed from first operation. If the reset-delay plug is not removed, the control may reset before a test sequence is completed because of the possible delays between trip operations when manual reclosing is used.
3. The variable autotransformer must be kept energized at the proper setting while the recloser is closed manually. Setting it properly before manual reclosing is initiated assures accurate timing values.

MAINTENANCE INFORMATION

Maintenance Manuals

CAUTION: This equipment requires routine inspection and maintenance to ensure proper operation. If it is not maintained, it can fail to operate properly. Improper operation can cause equipment damage and possible personal injury. G105.1

Maintenance instructions for the Form 3A, Type ME control are included in *Service Information S280-75-2* and *S280-75-46*.

Replacement Parts

Replacement parts for Kyle controls are available through the factory Service Department. To order replacement parts, refer to the applicable maintenance manual and current Replacement Parts price list for catalog numbers and pricing. Contact your Cooper Power Systems Division sales representative for additional information and ordering procedures.

Repair Shops

Factory authorized repair shops are located throughout the continental United States to provide maintenance, repair, and testing services for Kyle controls and reclosers. For further information, contact your Cooper Power Systems Division sales representative.

Factory Maintenance Classes

The factory service department offers maintenance training courses for Kyle recloser controls. These classes, taught by experienced service technicians, are held at the factory's in-house training facility. For additional information, contact your Cooper Power Systems sales representative.

Video Cassette Training Program

A 29-minute video tape program; *KSPV3 Kyle Type ME control, Form 3A, Description and Operation* is available as a supplemental training aid for operating and service personnel.

This video program, developed for use in the factory training school, is designed to be used in conjunction with existing service literature. For additional information, contact your Cooper Power Systems sales representative.

COOPER Power Systems

©2002 Cooper Power Systems, Inc.
Kyle® is a registered trademark of Cooper Industries, Inc.

P.O. Box 1640
Waukesha, WI 53187
www.cooperpower.com

COOPER
Cooper Power Systems

Reclosers

Type ME Electronic Recloser Control, Form 3 and 3A Maintenance Instructions - Basic

S280-75-2
Service Information

Figure 1.
Kyle® Type ME electronic recloser control

88936KMA

CONTENTS

Safety Information 2
Introduction 3
Description 3
Operation 5
Periodic Field Inspection and Maintenance 6
Servicing 8
Circuit Logic 8
Plug-In Circuit Boards Function 10
Battery Charging Board 10
Phase Trip No. 1 Board 11
Phase Trip No. 2 Board 11
Ground Trip No. 1 and No. 2 Boards 11
Output Board 12
Diode Board 12
Recloser-Reset Board 12
Closing Coil Control Fuse 12
Interchangeability of Boards Between Form 2, Form 3 and Form 3A Electronic Controls 12
Troubleshooting and Testing 13
Detailed Circuit Checks 14
Input Circuits 17
Internal dc Load Current Signal 18
Internal Minimum Trip Signal 19
Time-Current Characteristic Curves (TCC) 20
Control-Recloser operation 22
Major Control Damage 29
Battery Charging 31
Mechanical and Electrical Hardware 35
Battery Maintenance 35
Battery Specifications 35
Maintaining Battery Charge 35
Field Testing a Battery 35
Shop Testing a Battery 36
Appendix I 37
Test Sheet 37
Appendix II 38
List of Electronic Recloser Maintenance Manuals 38
Appendix III 38
List of Electronic Control Accessory Manuals 38
Appendix IV 38
Service Parts List 38
Appendix V 41
Form 2 Connection Diagram 41
Form 3 Connection Diagram 42
Form 3A Connection Diagram 43

These instructions do not claim to cover all details or variations in the equipment, procedure, or process described, nor to provide direction for meeting every possible contingency during installation, operation, or maintenance. When additional information is desired to satisfy a problem not covered sufficiently for the user's purpose, please contact your Cooper Power Systems sales engineer.

SAFETY INFORMATION

Following is important safety information. For safe installation and operation of this equipment, be sure to read and understand all cautions and warnings.

Hazard Statement

This manual contains two types of hazard statements:

WARNING: Refers to hazards or unsafe practices which could result in severe personal injury, or death, and equipment damage.

CAUTION: Refers to hazards or unsafe practices which could result in damage to equipment or in personal injury.

SAFETY INSTRUCTIONS

Following are general caution and warning statements that apply to this equipment. Additional statements, related to specific tasks and procedures, are located throughout the manual.

CAUTION: Before maintaining or testing this equipment, carefully read and understand the contents of this manual.

CAUTION: Shorting battery positive to battery negative at the battery test terminals will cause permanent damage to the control. The control will be inoperative and possible misoperation (unintentional operation) of the recloser may result.

CAUTION: Do not short battery positive to the control cabinet (or other ground). If shorted on a Form 3 control the control will be permanently damaged, the control will be left inoperative and possible misoperation (unintentional operation) of the recloser may result. If shorted on a Form 3A control a resistor on the input board will be destroyed; however, the control will remain operative.

CAUTION: The control must be removed from service before disconnecting the control battery for shop testing or replacement. Removing the control battery from an in-service control, may cause misoperation (unintentional operation) of the recloser.

CAUTION: In order to prevent possible, misoperation (unintentional operation) of the recloser, the control must be removed from service prior to performing any maintenance, testing or programming changes.

CAUTION: Be sure that test equipment leads have insulated clips to prevent short circuiting adjacent ME control terminals during testing. Shorting terminals may cause permanent damage to curcuit components. the control may be inoperative and possible misoperation (unintentional operation) of the recloser may result.

WARNING: High voltage. The COMMON AC GND terminal is connected to the control cabinet. If the incoming 120-Vac supply is inadvertently connected to the common terminal the control cabinet will be at 120-Vac potential. Contact with high voltage will cause severe personal injury or death.

WARNING: Be sure to follow all locally approved procedures and safety practices when removing or installing the control. Improper handling may result in severe personal injury and equipment damage.

WARNING: High voltage. Contact with high voltage will cause serious personal injury or death. Follow all locally approved safety procedures when working around high voltage lines and equipment.

ADDITIONAL INFORMATION

These instructions do not clain to cover all details or variations in the equipment, procedure, or process described, nor to provide directions for meeting every possible contingency during installation, operation, or maintenance. When additional information is desired to satisfy a problem not covered sufficiently for the user's purpose, please contact your sales engineer.

INTRODUCTION

Service Information S28O-75-2 covers basic maintenance instructions for the Type ME electronic control. The manual includes a general description of the control, its operating principles and instructions for periodic inspection and testing. Service parts lists along with ordering information are included in Appendix IV.

An introduction to the Form 3A, Type ME, electronic control is available on video cassette (KSPV3); in this program the function of all standard operating and programming features is explained.

The factory service department offers maintenance training courses for Type ME controls. These classes, taught by experienced service technicians, are held at the factory's in-house training facility. For additional information, contact your sales engineer.

DESCRIPTION

The Kyle Type ME electronic recloser control (Figure 1) is comprised of a number of programmable, solid-state electronic circuits that perform the command functions involved in automatic recloser operation. It is used to operate all Kyle electronically controlled reclosers.

A swing-out front panel contains the programming and operating elements of the control (Figure 2). The upper, black portion

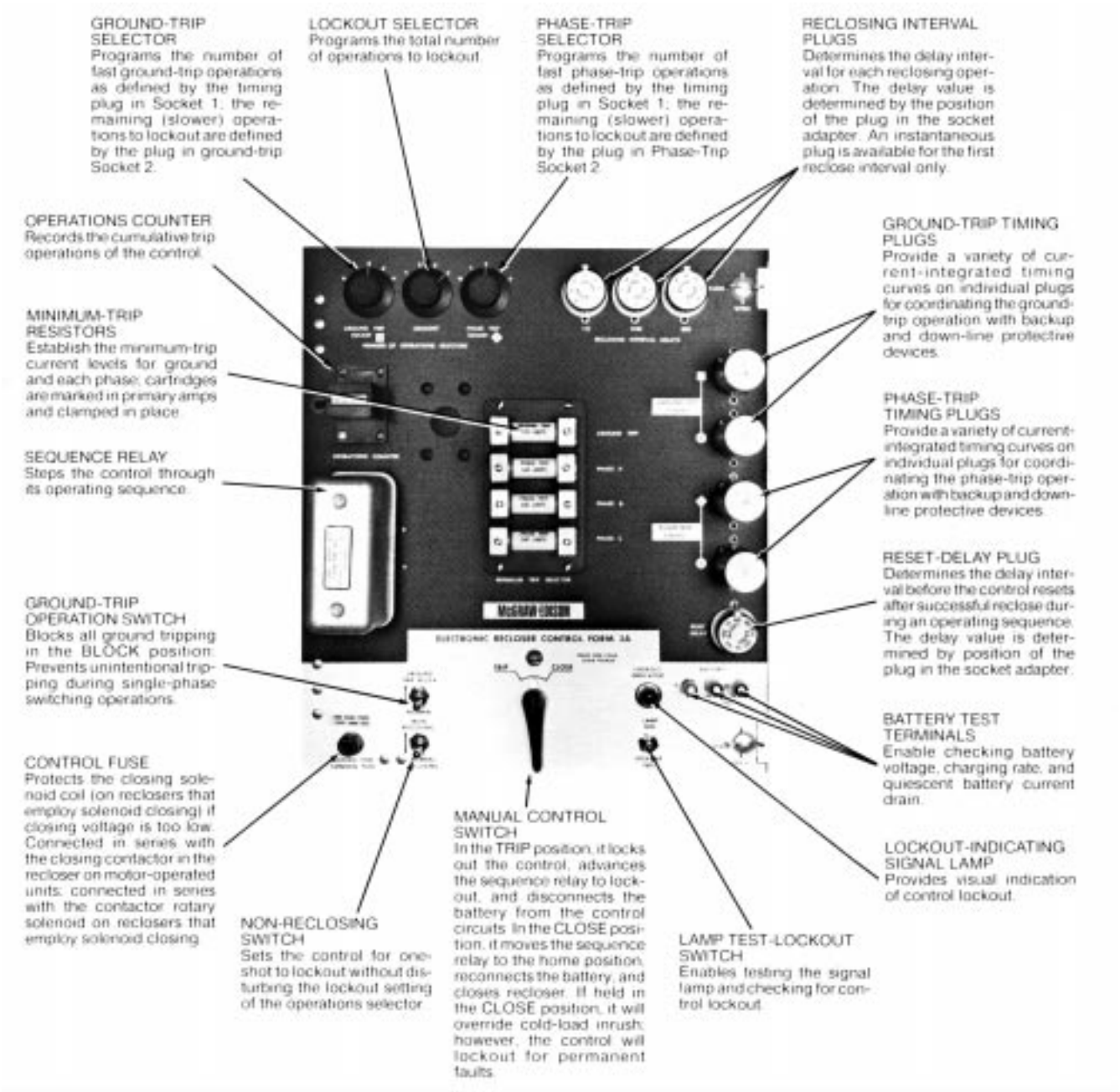

Figure 2.
Electronic control panel.

88937KMA

of the front panel contains the plug-in components and setting knobs for programming automatic recloser operation. The switches and indicators used for manual operation and service are grouped on the bottom, light portion of the panel.

The front panel is backed by a printed-circuit tie board which supports and interfaces the plug-in circuit boards with other related circuit components (Figure 3). Program-altering, remote control, indicating, and general convenience accessories can be added to further expand and enhance the application capabilities of the control.

Line current flowing through the recloser is sensed by three internally mounted bushing-current transformers, one on each phase. When the phase current, or the zero-sequence (ground) current, exceeds its programmed minimum-trip value, the electronic control initiates the programmed sequence of recloser tripping and reclosing operations. If the fault is temporary, the control ceases to command recloser operations after successful reclose, and the control resets to the start of its operating sequence after a preset time delay. If the fault is permanent, the control performs its complete programmed sequence of recloser commands and locks out with the recloser open. Once locked out, the control must be manually reset to the start of its operating sequence which simultaneously closes the recloser.

Factory-calibrated timing plugs establish the time-current characteristics for both phase and ground tripping. Two sets of individual timing curves provide dual timing for both phase and ground.

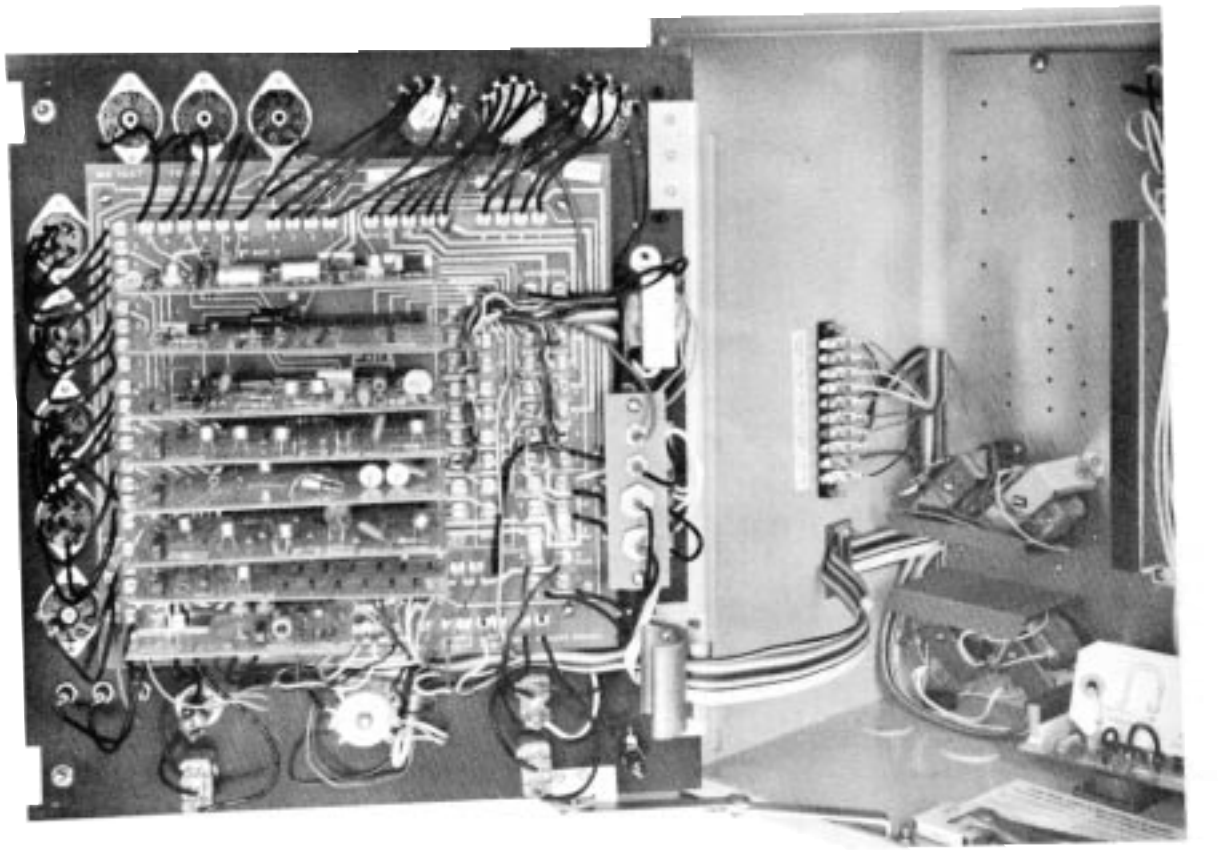

88938KMA

Figure 3.
Tie board on back of front panel mounts the individual printed circuit boards.

OPERATION

Since the understanding of the terminology and the operating sequences of an electronically controlled recloser is important to the rest of this maintenance manual, examples of typical operating sequences of an electronically controlled recloser under permanent fault (Figure 4) and temporary fault (Figure 5) conditions are given. The definition of the terms and callouts used in Figures 4 and 5 are:

- **Minimum Trip**—Minimum trip is usually set at greater than 2 times (200%) the maximum expected load current to help prevent nuisance tripping on inrush currents, while still being sensitive to low level faults.
- **Over-Current**—Any current that exceeds the minimum-trip level of the control.
- **Permanent Fault**—Any over-current condition that persists through the operating sequence of the control.
- **Temporary Fault**—Any over-current condition that *does not* persist through the operating sequence of the control.
- **Home Position**—Position of sequence relay immediately after a reset operation of the control. Reset operation can be either manual, by moving the Manual Control Switch to “CLOSE”, or automatic, after a temporary fault.
- **Lockout**—Sequence-relay position when over-current is not cleared before the operating sequences of the control are exceeded; control and recloser are tripped and held open until manually reset with the Manual Control Switch, or remotely with one of the remote close accessories.
- **TCC**—Time-Current-Characteristic-Curve.
- **Reclose Interval**—Time-delay interval for each reclosing operation within the operating sequence of the control.
- **Fault Level Current**—Any current that exceeds the minimum-trip level of the control.
- **Normal Load**—Any current below the minimum-trip level of the control.

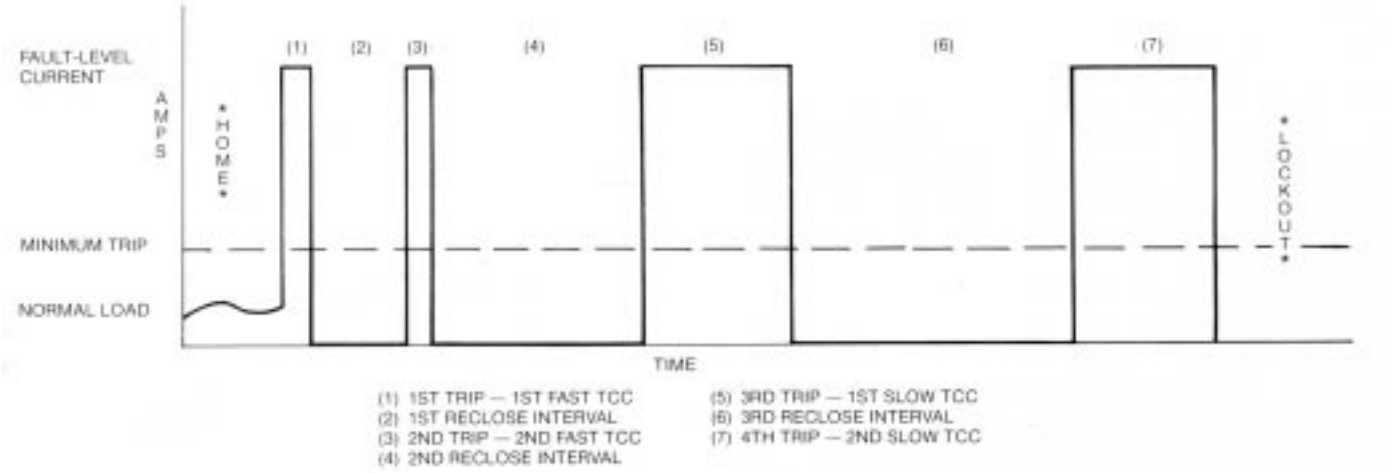

Figure 4.
Typical operating sequence of an electronically controlled recloser under permanent fault conditions.

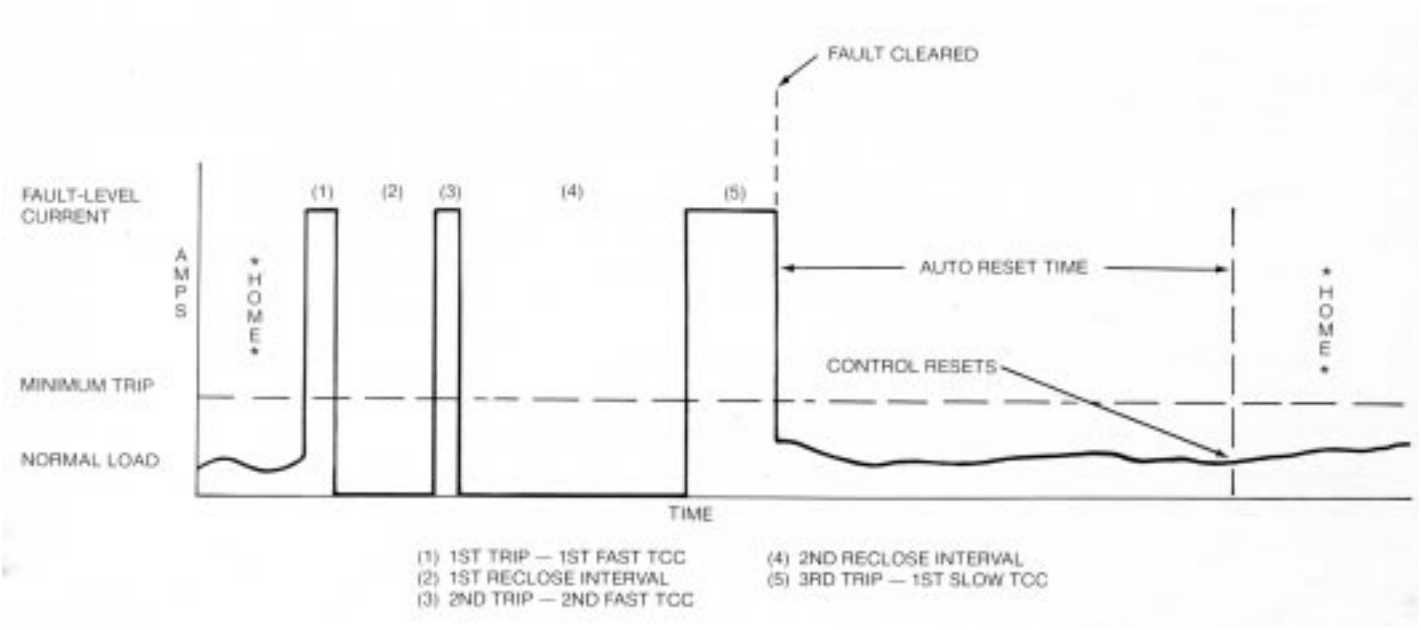

Figure 5.
Typical operating sequence of an electronically controlled recloser under temporary fault conditions.

A functional block diagram of the control operation is shown in Figure 6. Line current conditions are continuously monitored by the three bushing-type current transformers in the recloser. output from these transformers is fed to the trip network in the control, which includes: the minimum-trip resistors, isolation transformers, and rectifier circuits.

If current remains above the minimum-trip level, the tripping —reclosing sequence of fast and delayed operations is repeated as programmed to lockout.

When current above the selected minimum-trip level is detected in one or more phases, the following chain of events will occur for an operating sequence of two-fast and two-delayed operations:

The overcurrent signal is integrated with time on the characteristic curve of the timing plug in Socket 1 to produce the signal which energizes the trip circuit. Energizing the trip circuit connects the battery to the trip solenoid, tripping the recloser. Simultaneously, the sequence relay advances to energize the first reclosing interval-delay plug. Upon expiration of this reclosing interval delay, a closing signal, from the control, closes the recloser, and the sequence relay sets up the circuitry for the second fast trip operation.

If the overcurrent is cleared before the operating sequence reaches lockout, the reset-delay circuit starts timing when the recloser closes into the unfaulted line. When the reset-delay plug times out, the sequence relay is reset to the start or “HOME” position and the control is ready for another two-fast, two-delayed trip-operating sequence. However, should the fault restart before the reset plug times out, the control will continue its operating sequence, where it left off last, and the reset-delay timing will be erased.

Ground-fault sensing and tripping operations occur exactly the same as phase-fault sensing and tripping, except that zero-sequence (ground) current is sensed instead of phase current. The ground-fault circuitry includes its own minimum-trip resistor, fast and delayed trip-timing plugs, and number of fast operations setting. Reclose and reset intervals and operations to lockout are common for both phase-trip and ground-trip modes of operation.

PERIODIC FIELD INSPECTION AND MAINTENANCE

Periodic inspection of the ME control should include these procedures: -

CAUTION: In order to prevent possible, misoperation (unintentional operation) of the recloser, the control must be removed from service prior to performing any maintenance, testing or programming changes.

1. Remove control from service (if connected to an in service recloser):
   A. Switch Ground Trip Block switch to “BLOCK”.
   B. Disconnect control cable from control.

WARNING: High voltage. Contact with high voltage will cause serious personal injury or death. Follow all locally approved safety procedures when working around high voltage lines and equipment.

2. Check the outer surface of the control cabinet for paint scratches. Touch up any paint scratches to maintain the cabinet condition.
3. If the second entrance hole in the bottom of the cabinet is not used, be sure that the hole plug is secure in the bottom of the housing to maintain its weatherproof design.
4. Inspect the gasketing. Check the control interior for any moisture or foreign matter. Repair or correct if necessary.
5. Check that the timing plugs, reset and reclosing interval delays, and minimum-trip resistors are firmly in their sockets (Figure 2).
6. Swing open the front panel. Check to see that all leads to tie-board terminals are secure (Figure 7).

CAUTION: Shorting battery positive to battery negative at the battery test terminals will cause permanent damage to the control. The control will be inoperative and possible misoperation (unintentional operation) of the recloser may result.

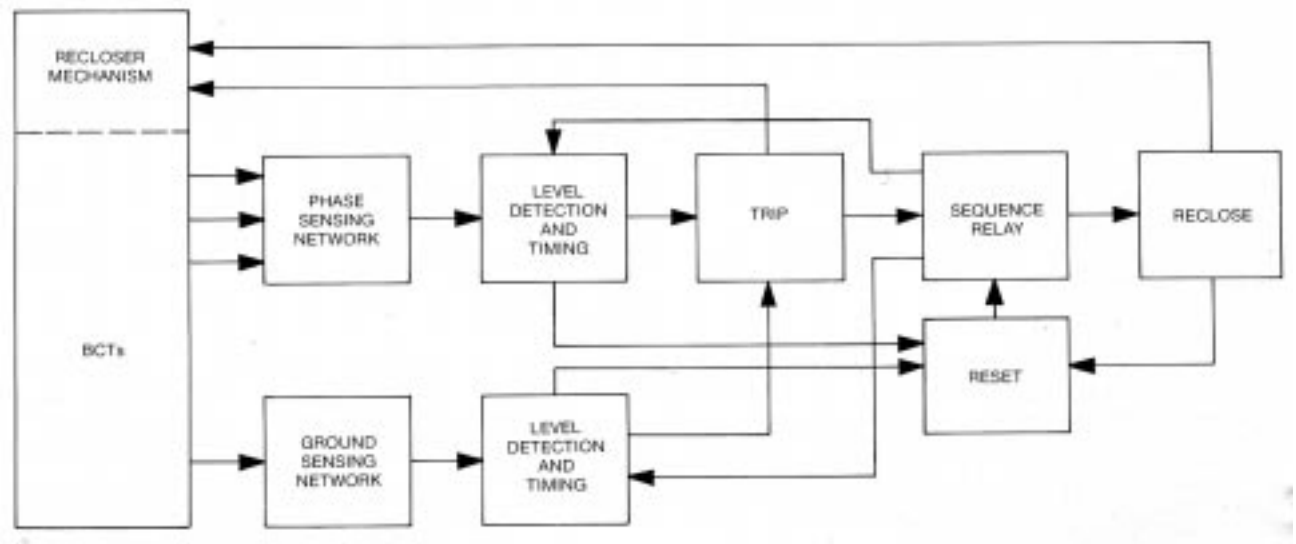

Figure 6.
Functional block diagram of Type ME control.

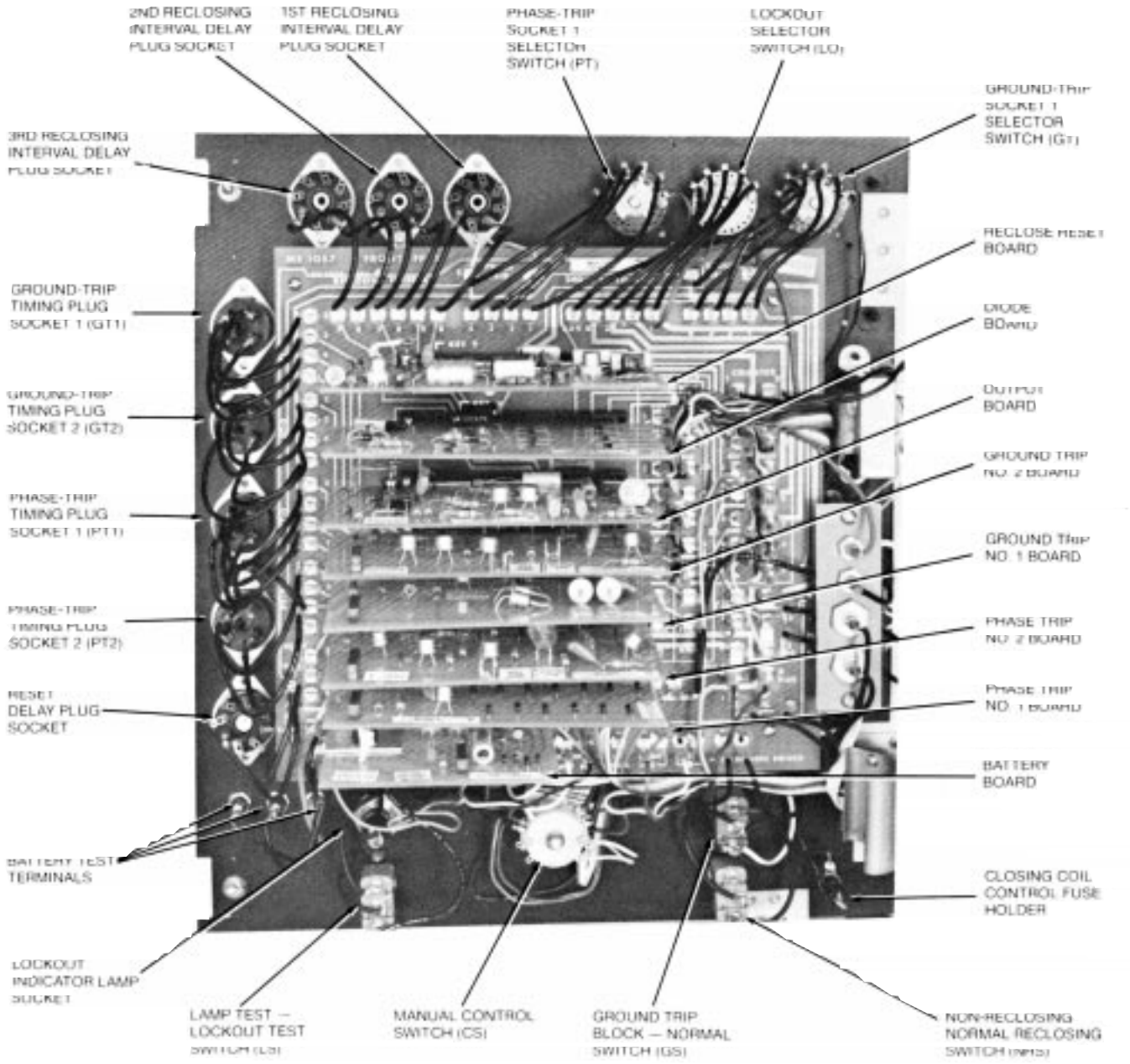

88939KMA

Figure 7.
View of a Form 3A tie board (back if front panel. Notations in parenthesis after callout refer to the circuit points on the tie board diagram illustrated in Figure 57.

7. Check battery voltage. Three battery test terminals in the lower right corner of the panel (Figure 2) are used to check battery voltage, quiescent drain, and charging rate. Refer to the "Battery Maintenance" instructions in this manual.

The left-hand pair of terminals (V) are connected directly across the battery output to check battery voltage. The red terminal (far left) is positive (+). The output voltage of a fully charged battery will normally be 26-28-volts. If lower, refer to the "Detailed Circuit check—Battery Charging" and/or "Battery Maintenance" section of this manual.

If necessary, recharge the battery, as detailed in the "Battery Maintenance" section.

8. Make sure circuit boards are secure in their receptacles. Examine wiring between transformers and tie boards to see if connections are in order. Close front panel and secure firmly with fasteners.

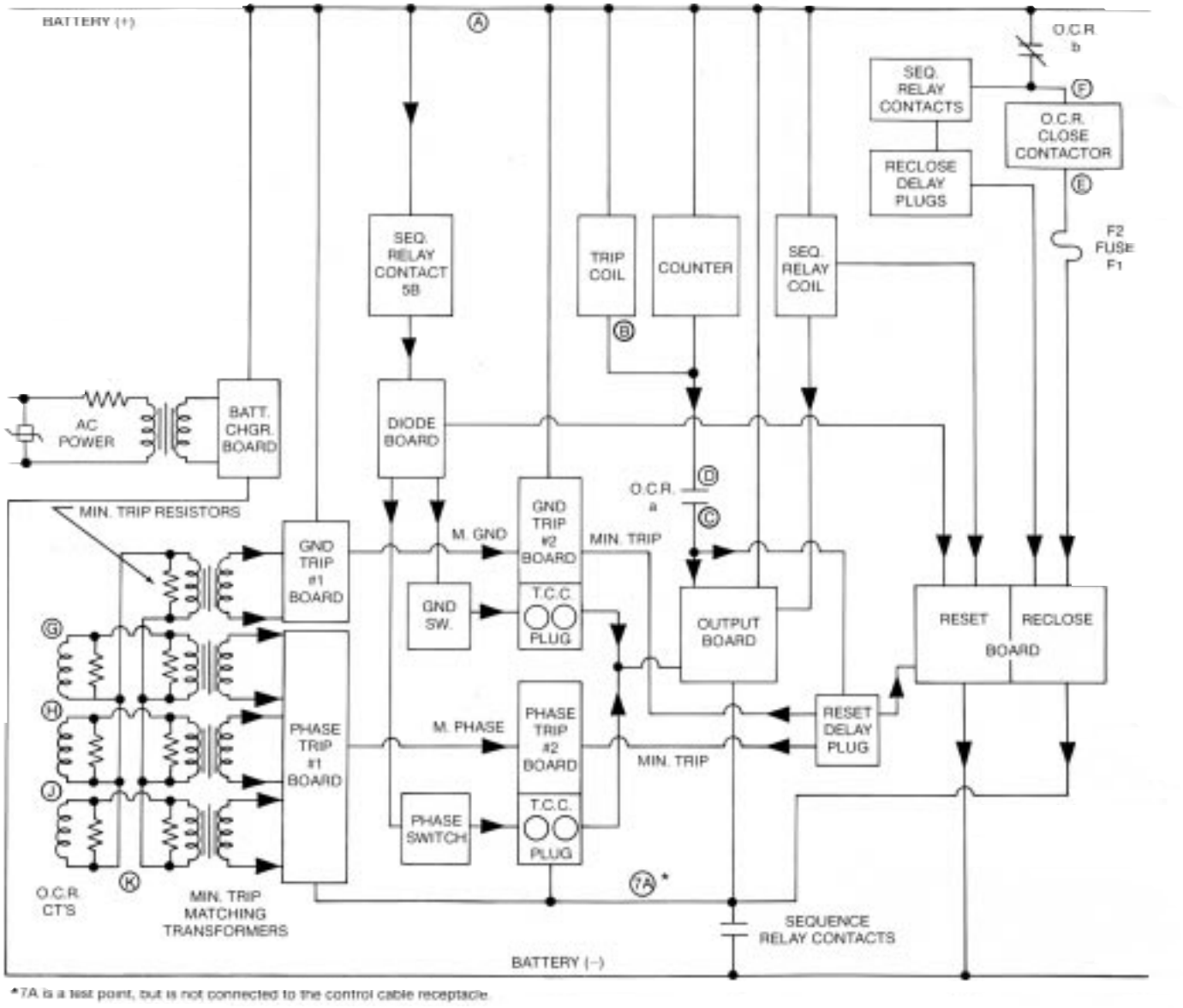

Figure 8.
Detailed block diagram of Type ME control in lockout position. Letters in circles (A,B, etc.) refer to control cable receptacle connection pins and to test points referred to in the "Troubleshooting and Testing" section.

9. Check control battery charging rate before returning the control/recloser to service; see the “Battery Maintenance” section for details on charging rate testing.

NOTE: The servicing procedures outlined in this manual are for a standard Type ME Form 3 and Form 3A control and do not include the operational checks of any of the accessories that may be attached. In some cases the accessories may modify the standard operating characteristics of the Type ME control. Refer to catalog bulletin 280-75 for accessories furnished and/or Accessory operation, Testing, and Installation manuals listed in Appendix lll of this manual.

10. Return control to service:

A. Check battery to ensure that it is properly connected.
B. Move Manual Control Switch to match position of recloser (open or closed).
C. Reconnect control cable to control.
D. Switch Ground Trip Block switch to “NORMAL”.

SERVICING

Circuit Logic

Line current conditions are monitored continuously by three bushing-current transformers in the recloser, one on each phase. The current transformers are connected to the control-phase matching transformers in a typical “WYE” to “WYE” configuration. Zero-sequence current is derived from the vector sum of the phase currents and fed to a fourth ground matching transformer.

The minimum-trip resistors calibrate the overall recloser trip current by diverting a portion of the recloser current from the control matching transformers.

The four matching transformers isolate the various signals from each other and deliver an ac voltage proportional to the recloser-line current to the phase-trip No.1 end ground-trip No. 1 boards.

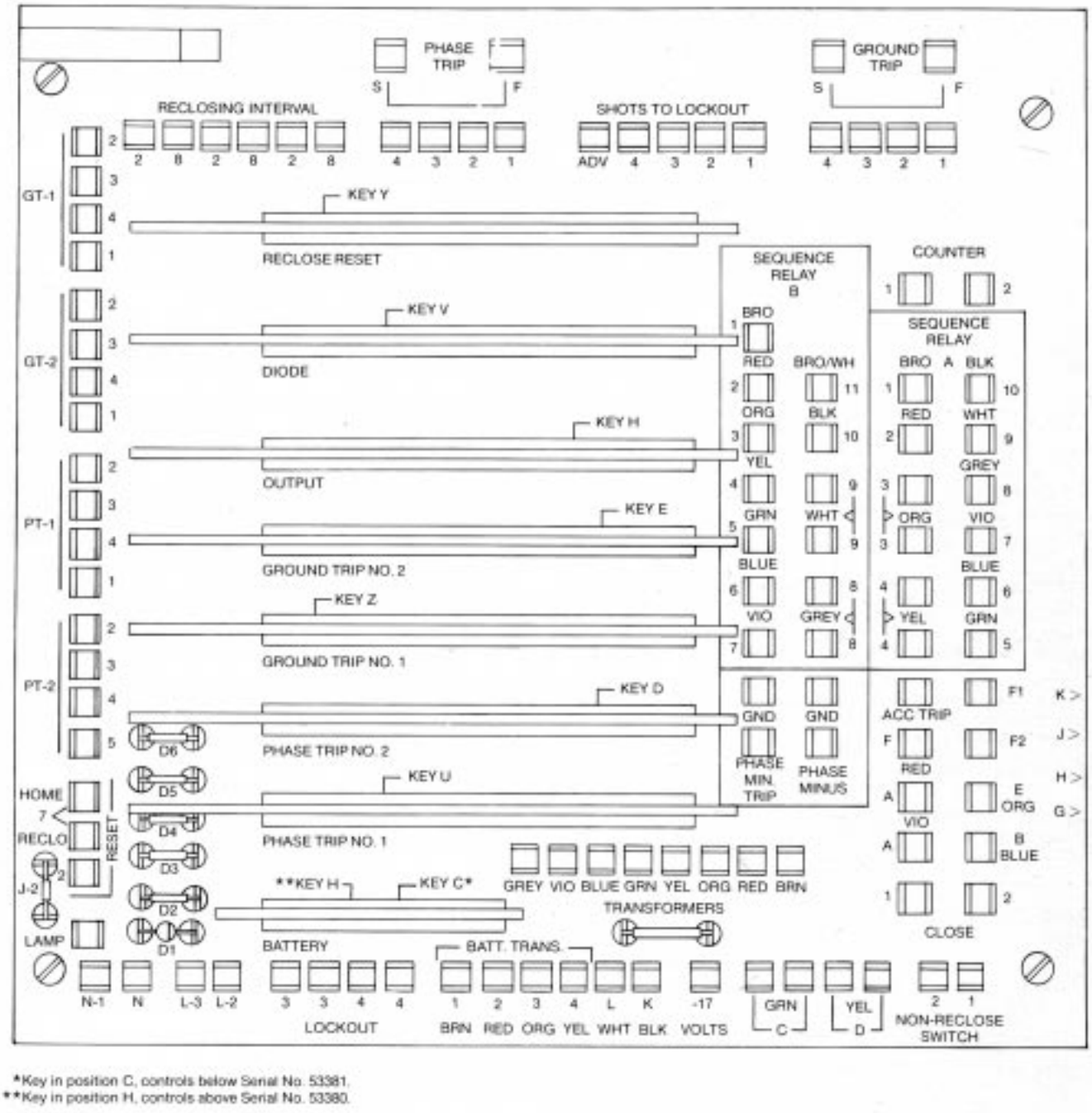

*Key in position C, controls below Serial No. 53381.
**Key in position H, controls above Serial No. 53380.

Figure 9.
Diagram of Form 3A tie board showing plug-in circuit board location. Form 3 tie boards are similar (see Figure 18), except some of the terminals are missing or in a slightly different location.

From this point, phase- and ground-trip signals are very similar, and only phase signals will be described.

The phase-trip No. 1 board circuitry, consisting of a threephase full-wave rectifier, which converts the ac input signal from three phase to a single do signal. The do signal is applied to the phase-trip No. 2 board which measures the do level, and determines whether a fault current exists at the recloser.

If the load current conditions are in the fault region, the minimum-trip portion of the phase-trip No. 2 board switches on, allowing the time-current curve circuits to start their programmed time delay. The time-current curves are driven by the same do voltage output of the phase-trip No. 1 board, and as a result higher fault-current levels will result in a shorter time delay before tripping.

After the timing plugs have completed their cycle, the output board is triggered. The output board applies a 24-Vdc signal to the recloser trip coil, the control counter, and the control sequence relay. The output board is switched off when the recloser “a” contact de-energize the circuitry, including the sequence relay. The sequence-relay rotary contacts then advance to the next position in the tripping and reclosing cycle.

The recloser “b” contacts then close, connecting battery power to the reclose intervals of the control which provides a time delay for reclosing the recloser. The rotary close solenoid is then energized through the recloser “b” contacts, the control fuse, and the reclose portion of the control circuitry. This mechanically closes the closing contactor in the recloser—allowing the closing solenoid to be energized.

After closing the recloser “b” contact opens, this removes do power from the entire closing circuit.

The automatic reset portion of the **Form 3A** control is energized by the sequence relay and the recloser “a” contact; if a fault does not exist on either phase or ground trip, reset timing is initiated (unless connected to time after first trip). If a fault exists on either phase or ground, the reset timing is erased and is blocked for the duration of the fault. For **Form 3,** reset timing begins after the first tripping operation. Should the reset time-delay operate before the recloser has locked open, the sequence relay will return to the starting position and a new sequence of operations will begin.

NOTE: F3 controls can be updated, with the addition of the KA304ME, to duplicate the automatic reset mode of a F3A control.

The **Form 3A** control battery is charged by the ac input (120-or 240-Vac) to the control. The ac input is applied through a current limiting resistor and isolating transformer to the battery charging board. The battery charging board converts the input to dc and supplies charging current to the control battery. on **Form 3** controls, the battery is charged by bushing current transformers on the recloser unless equipped with an ac charging accessory. on motor operated reclosers, the ac supply to the motor also supplies power to the **Form 3** battery charger.

Plug-in Circuit Boards - Function

The ME control contains a total of eight plug-in circuit boards on which are assembled the bulk of its operating circuits. The boards and their function will be discussed individually in the order they appear on the tie board, starting with the bottom board.

BATTERY-CHARGING BOARD

The lowest board in the rack is the battery-charging board (Figure 10). Prior to serial number 50070 controls were equipped with a fixed rate potential charging board (MEA 388-1) as standard equipment. After serial number 50070 a temperature regulated battery-charging board (MEA 1172) has been supplied as standard. !

The fixed rate charging board consists of a full-wave bridge rectifier, a capacitor, a reference zener diode and some resistors. The resistors control the charging rate into the battery, from the zener supply voltage.

The temperature regulated battery-charging board also makes use of a full-wave bridge rectifier, a capacitor, and a zener diode (used to regulate voltage). In addition a temperature sensitive thermistor is added to regulate the bias over a pair of transistors. These transistors are used in the circuit output to regulate the charging rate, in response to temperature. Several resistors are used in the transistor bias circuit; and one resistor is used to limit the maximum charging rate. A diode is placed in the output to protect the circuit from reverse bias. ‘

Energy for either battery-charging board comes from the 120- or 240-Vac source,through current limiting resistance and a potential transformer.

CAUTION: Do not replace a MEA 388-1 board with a MEA 1172, or vice-versa. A MEA 388-1 board will be damaged if replaced ffor a MEA 1172. A MEA 1172 will not provide adequate charging current if replaced for a MEA 388-1

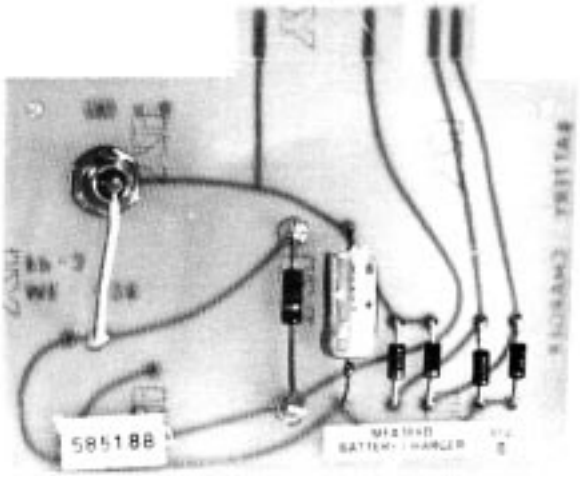

82027aKMA

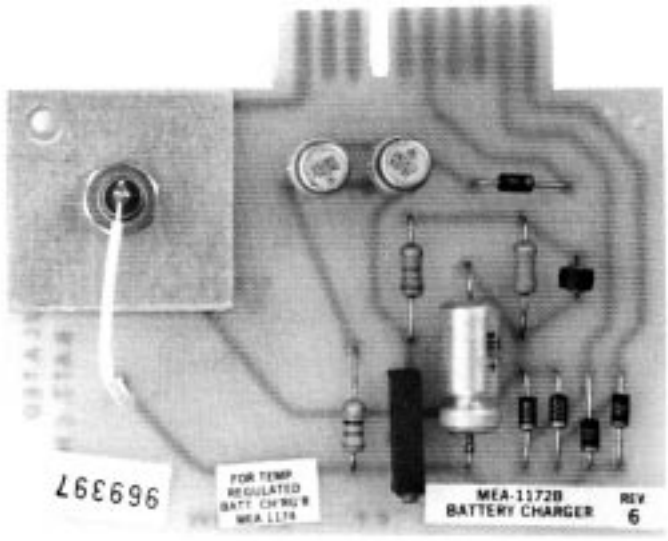

88940KMA

Figure 10.
Battery-charging board,

IMPORTANT

Beginning with control serial number 53381 the key position of the battery-charging board socket was changed. The key slot on the temperature regulated charging board (MEA 1172, 120/240-Vac) has been moved to match the socket arrangement. The new charging board can be identified by the **revision 6**, or higher, marking adjacent to the part number. A blue label, affixed to the accessory decal panel, inside the control door, identifies controls with the new temperature regulated battery-charging board.

Revision 6 boards may be used as a replacement for earlier revisions; earlier versions are electrically compatible. When installing a revision 6 board move the socket key to position "H".

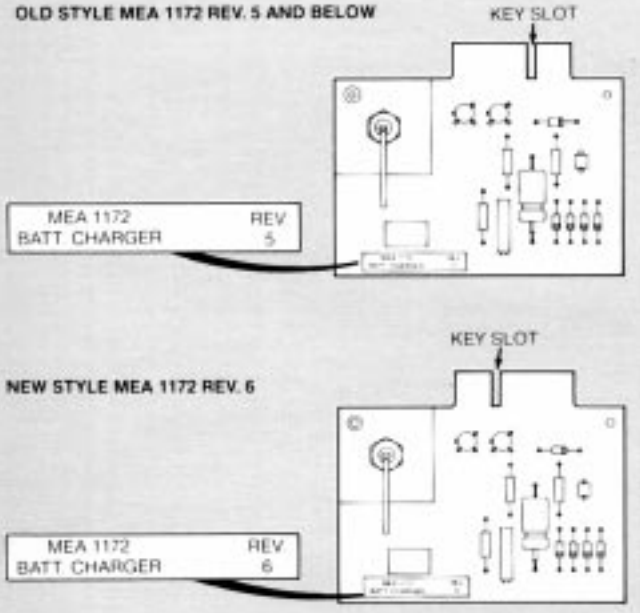

NOTE: Controls equipped with CT or potential charger in the recloser are unaffected by this change. They will continue to use the standard MEA 388-1 charging board, with the key in the original position.

PHASE-TRIP NO. 1 BOARD

The second board from the bottom is the phase-trip No. 1 board (Figure 11). It has three full-wave diode sets, one for each phase, along with a loading resistor for each phase. This board also has the beginning circuits for the minimum trip function.

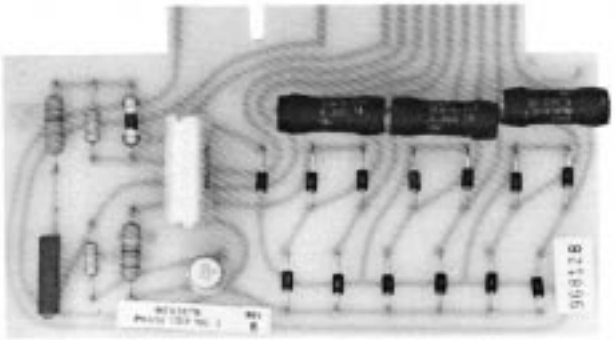

Figure 11. 88941KMA
Phase-trip No. 1 board.

PHASE-TRIP NO. 2 BOARD

The phase-trip No. 2 board (Figure 12) carries the remaining circuits for minimum-trip and the wave-shaping circuits for the timing plugs. There are two tabs on the phase-trip No. 2 board for the Form 3 and 3A control. one tab is labeled minimum-trip (MIN. TRIP)* and is battery plus for normal line currents and switches to battery minus for fault currents; the second tab marked (DIR. BLOCK)* is an inactive tab at this time.

* In early Form 3 boards, these tabs may not be labeled.

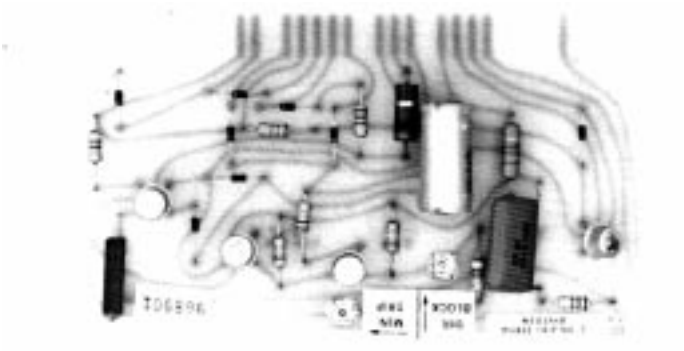

Figure 20. 86773KMA
Capacitor for CT-type battery charger.

GROUND-TRIP NO. 1 AND NO. 2 BOARDS

The next two boards up, ground-trip No. 1 and No. 2 (Figures 13 and 14), are like the corresponding phase-trip boards, except that the ground-trip No. 1 board has only a single input diode bridge for ground current. These boards carry almost the same parts and same configurations as the corresponding phase boards.

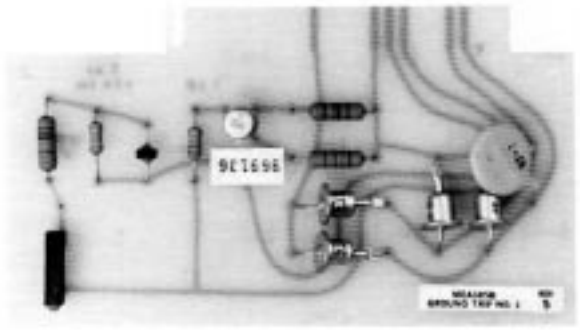

Figure 13. 88943KMA
Ground-trip No. 1 board.

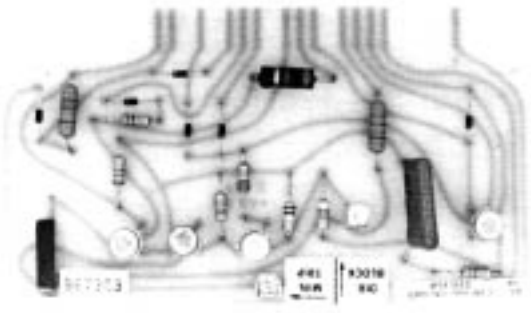

Figure 14. 88944KMA
Ground-trip No. 2 board.

OUTPUT BOARD

The output board (Figure 15) of the control has another do amplifier which senses the charge on the timing plugs and at the proper time gates the tripping SCR. This board also carries the diodes and resistors which make up the various reference voltages for the control. Other circuits on this board are used to inter-tie the tripping circuits and the reclose and reset circuits.

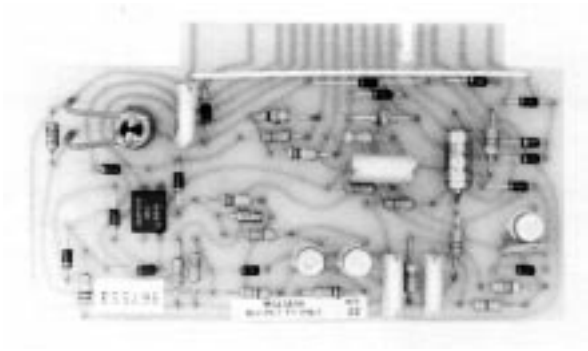

Figure 15. 88945KMA
Output Board.

DIODE BOARD

The diode board (Figure16)consists of a group of diodes which are connected to circuits on the other printed circuit boards. These diodes connect to the timing plugs, the reset circuit, the trip circuit, and the reclose circuit. The board also contains the circuit related to the closing circuit fuse.

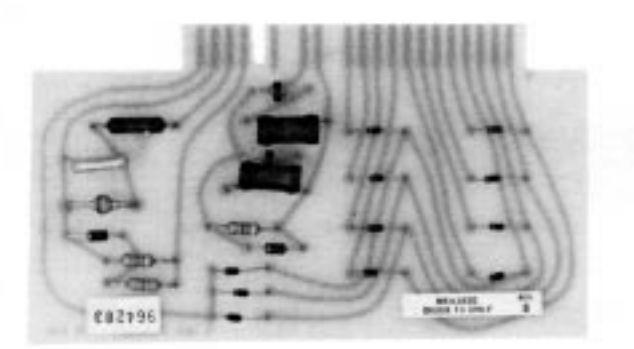

Figure 16. 88946KMA
Diode Board.

RECLOSE-RESET BOARD

The reclose-reset board (Figure 17) carries all circuits necessary for reclosing and resetting. The various large capacitors on this board are the C parts of an R-C circuit operating along with unijunctions and SCR's. The large SCR on this board is the reclose SCR.

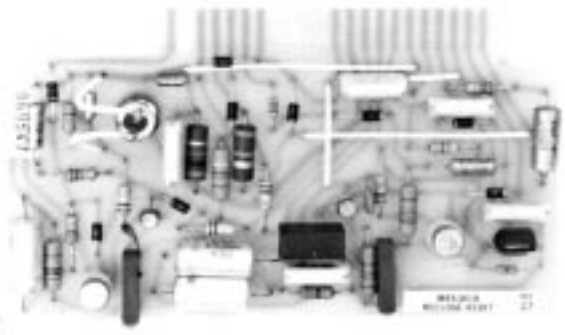

Figure 17. 88947KMA
Reclose-reset board.

Closing Coil Control Fuse

On solenoid-operated reclosers, the fuse will open the closing circuit to protect the potential closing coil in the recloser if closing cannot be accomplished due to low closing voltage. On motor-operated reclosers, the fuse is connected in series with the closing circuit contactor in the recloser.

A Buss Type MDQ-3/8 amp, 250-volt fuse, manufactured by Bussman Manufacturing is used and a box of five spare fuses is supplied with each control. Fuses of similar ratings by other manufacturers have slightly different characteristics and should not be used for replacement.

CAUTION: Use only Buss Type MDQ-3/8 amp fuses. Previously, all Form 3A and most earlier controls were supplied with Buss Type MDL-3/8 amp fuses. Buss has redesigned and changed the characteristics of that fuse and it is no longer suitable for use on any Form 3 or Form 3A control. Failure to use proper closing coil control fuse will result in unnecessary fuse operation and prevent the recloser from closing.

NOTE: Buss has redesigned the MDL-2.5 amp fuse that is used on controls shipped with reciosers having "quick-close" mechanisms such as Type VSO and VSMT reclosers. The characteristics of the new single element MDL-2.5 fuse do not affect the application in the control. Buss will also continue to manufacture the original dual element version of the fuse under the new designation of MDQ-2.5. The MDQ-2.5 amp fuse will be supplied with controls for this application. Both the MDL-2.S amp fuse and the MDQ-2.S amp fuse are acceptable for this application.

INTERCHANGEABILITY OF BOARDS BETWEEN FORM 2, FORM 3 AND FORM 3A ELECTRONIC CONTROLS.

The battery-charger, phase-trip #1, phase-trip #2, ground-trip #1 and ground-trip #2 circuit boards can electrically be interchanged between Form 2, Form 3 and Form 3A controls. However, the Form 2 circuit boards have an offset connector which can result in clearance problems when Form 2 and Form 3/3A boards are mixed in the same control. This procedure is therefore not recommended except in an emergency.

The fixed rate battery charging board (MEA 388-1) is electrically interchangeable between Form 2, Form 3 and Form 3A controls, when replacing another fixed rate board. The temperature regulated charging board (MEA 1172) should only be used to replace another charging board of the same type.

The upper three circuit boards (output, diode, and reclose-reset boards) are not interchangeable between Form 2 and Form 3/3A controls. Interchanging them will cause control misoperation, and may cause circuit board damage.

TROUBLESHOOTING AND TESTING

A number of relatively simple circuit tests can be made on the ME electronic control. These tests will indicate whether major circuits are operating properly or not, but they will not necessarily isolate the faulty component within the circuit. For easy reference to testing points, refer to Figures 18 and 19 for Form 3 controls and Figures 20 and 21 for Form 3A controls. When appropriate, isolated test points will be shown for individual circuit tests with reference to the propertie board (Figures 18 to 21).

TABLE 1
Pre-Check

Trouble	Check
1. Completely inoperative	Are boards plugged in correctly? Is battery connected and fully charged (23-Vdc minimum)? Is control cable connected? Is control programming correct?
2. Won't close	Is the control fuse good? RE and WE series reclosers—Is the yellow operating handle up? CE, ME and VS series reclosers—Is the manual-trip/reset knob in the proper position? RE and WE series reclosers—Can the rotary close solenoid be heard to operate? If so, test for high voltage to recloser closing coil (refer to specific recloser maintenance manual— Appendix II). Is there 120- or 240-Vac power to the control?
3. Won't trip	Is battery connected and fully charged (23-Vdc minimum)? Is control cable properly connected?

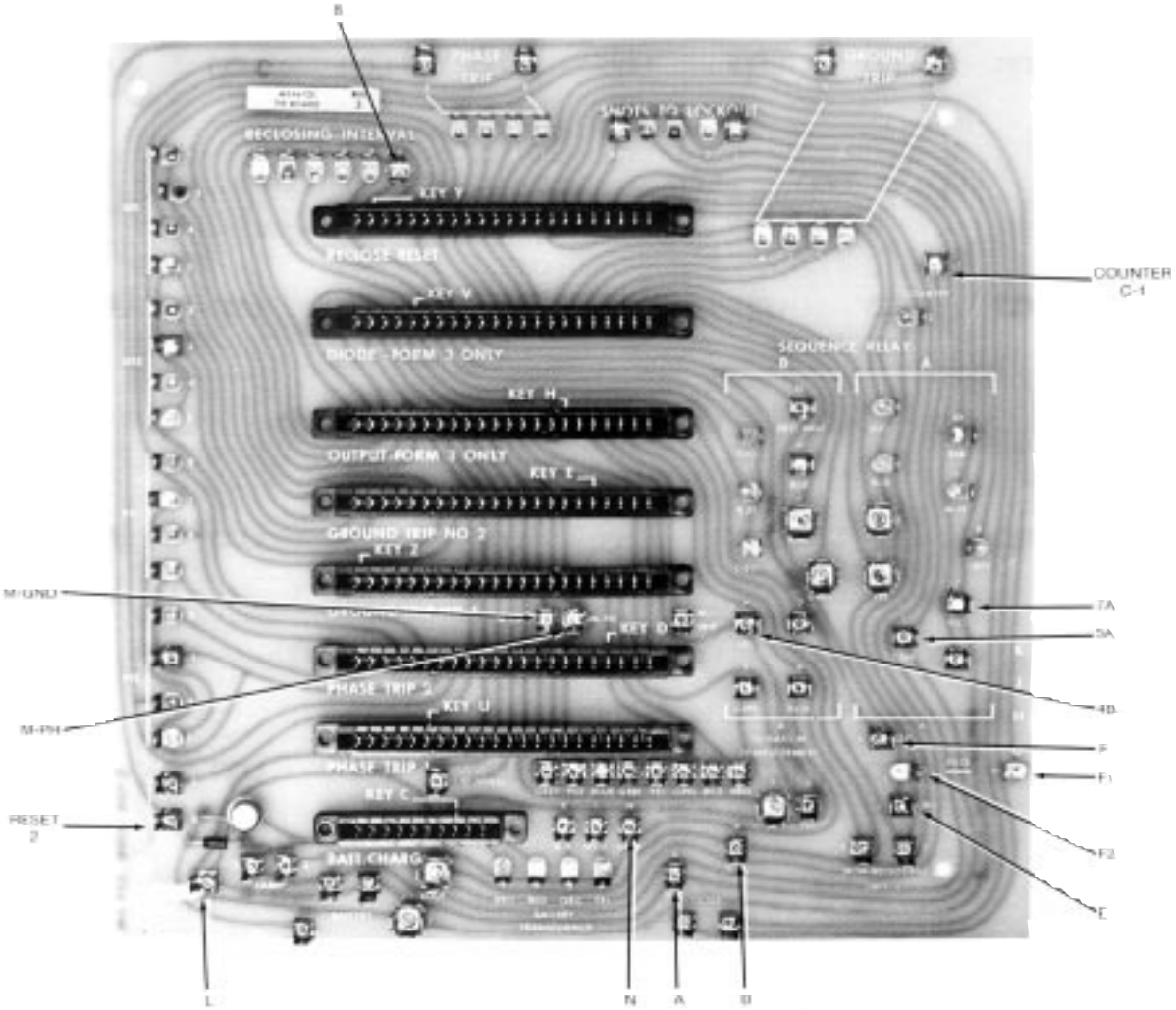

Figure 18. 82040KMA
Form 3 electronic control tie board. The test points listed above will be covered in detail in the "Detailed Circuit Check" section of this manual.

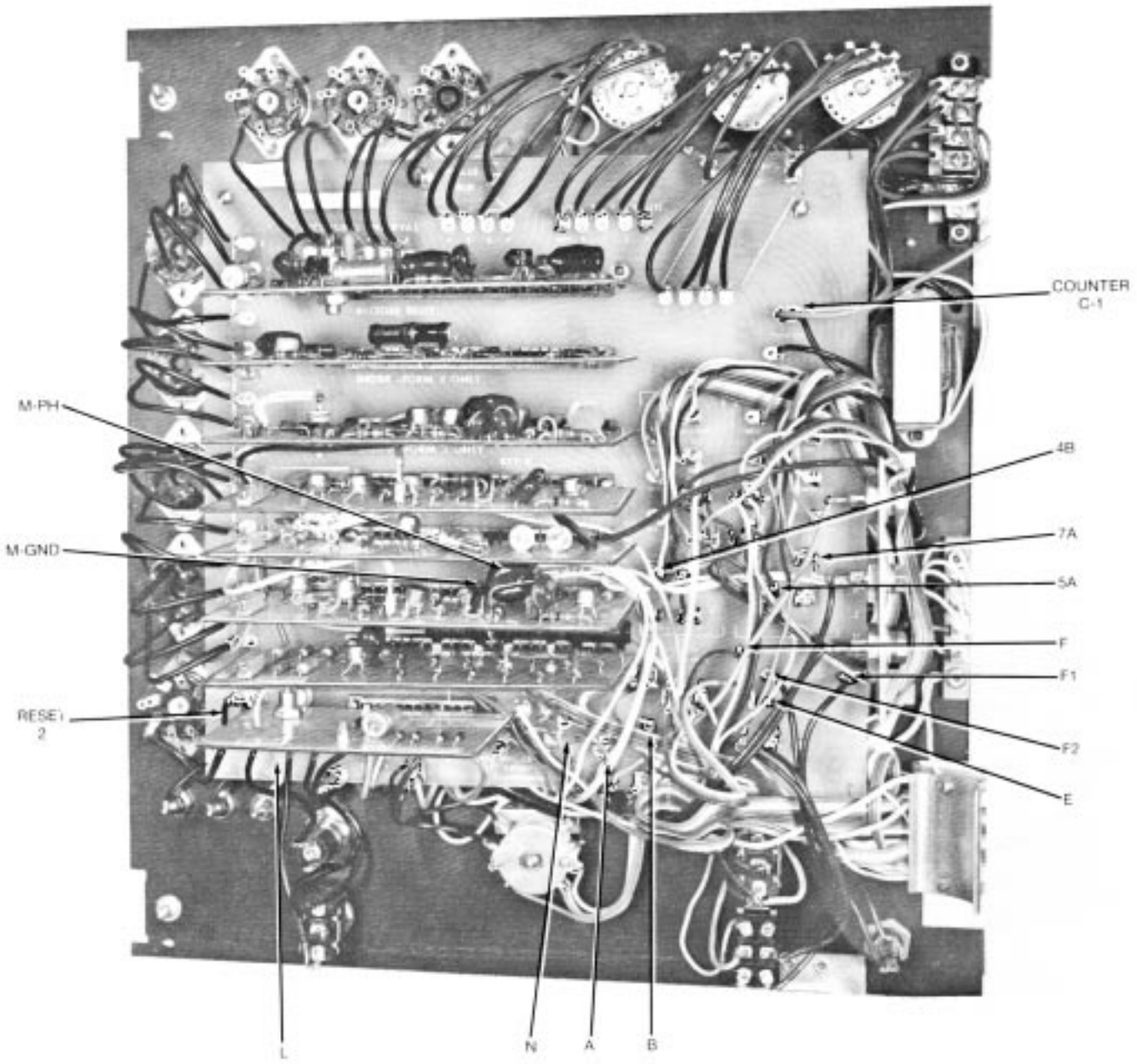

Figure 19.
Form 3 electronic control tie board and control back panel. The test points listed above will be covered in detail in the "Detailed Circuit Check" section of this manual.

82047KMA

Pre-Check

When troubleshooting a control reported to have failed or to have not worked properly, always check for simple problems first.

Detailed Circuit Checks

The following test procedures require only the following two test devices.

A volt-ohm meter will be required (minimum meter input impedance 20,000 ohms per volt) to perform tests.

CAUTION: Be sure that test equipment leads have insulated clips to prevent short circuiting adjacent ME control terminals during testing. Shorting terminals may cause permanent damage to circuit components. The control may be inoperative and possible misoperation (unintentional operation) of the recloser may result.

The Kyle Type MET test set, or an actual recloser with a source of primary or secondary test currents can also be used to perform tests.

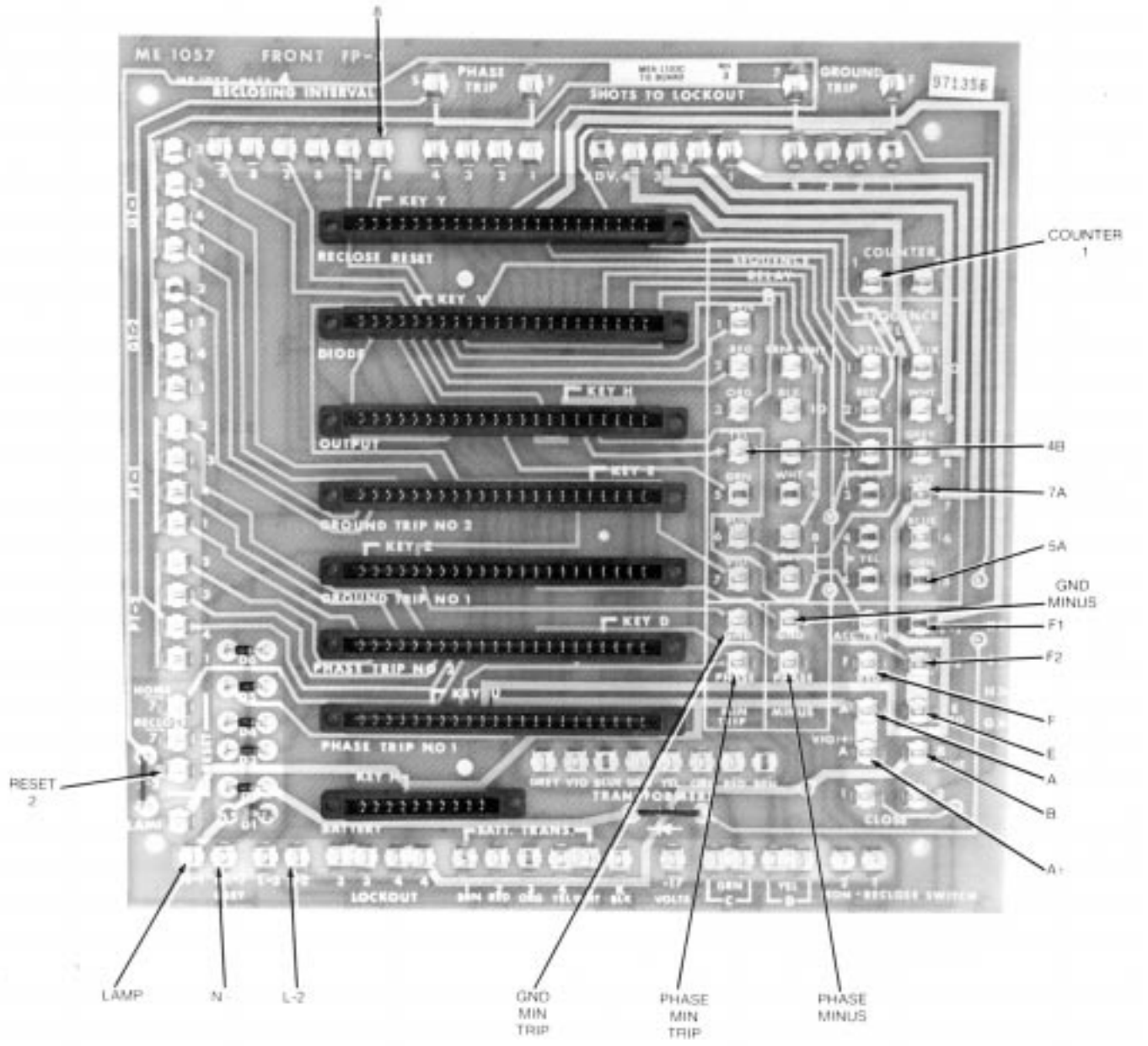

Figure 20. 88948KMA
Form 3A electronic control tie board. The test points listed above will be covered in detail in the "Detailed Circuit Check" section of this manual.

If a circuit board failure is suspected, always check or change the diode board first because:

- The diode board circuits operate in conjunction with the timing plugs, the output circuit, reset circuit, and reclosing circuit.
- A primary diode failure on the diode board can cause secondary failures on the output board or reclose set board.

NOTE Diode board short circuits are very rare in controls manufactured after 1970.

If this does not isolate the problem, continue with the circuit test.

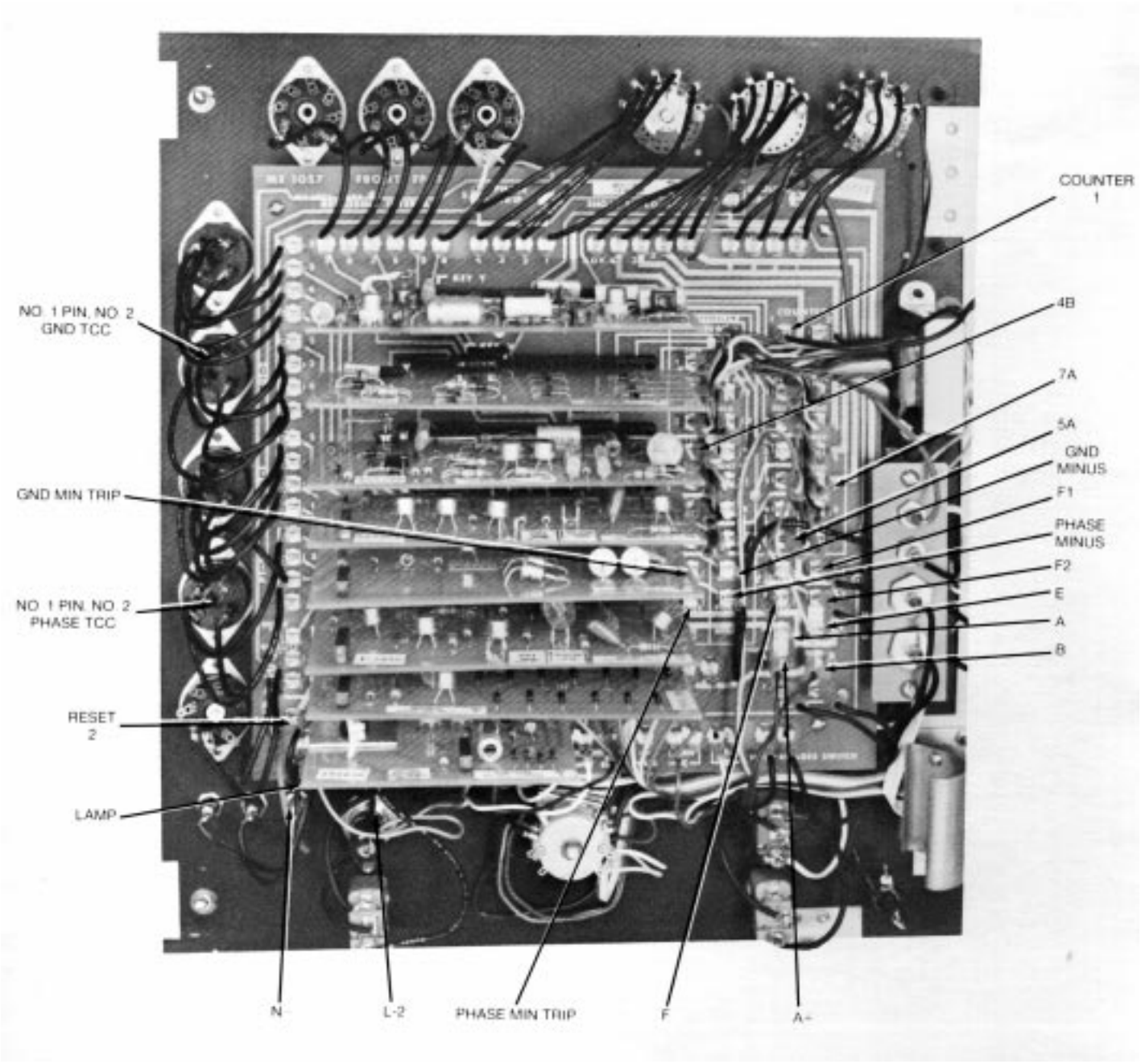

88939KMA

Figure 21.
Form 3A electronic control back panel. The test points listed above will be covered in detail in the "Detailed Circuit Check" section of this manual.

INPUT CIRCUITS

WARNING: High voltage. Contact with high voltage will cause serious personal injury or death. Follow all locally approved safety procedures when working around high voltage lines and equipment.

To check input signals to the control, measure the voltage across the minimum-trip resistors and matching transformer secondaries as follows:

1. Measure voltage across minimum-trip resistors (Figure 22) with 100% of minimum-trip current applied to control. The voltage should be approximately:
- Phase Resistors—0.17-Vac (170 millivolts)
- Ground Resistors—0.26-Vac (260 millivolts)

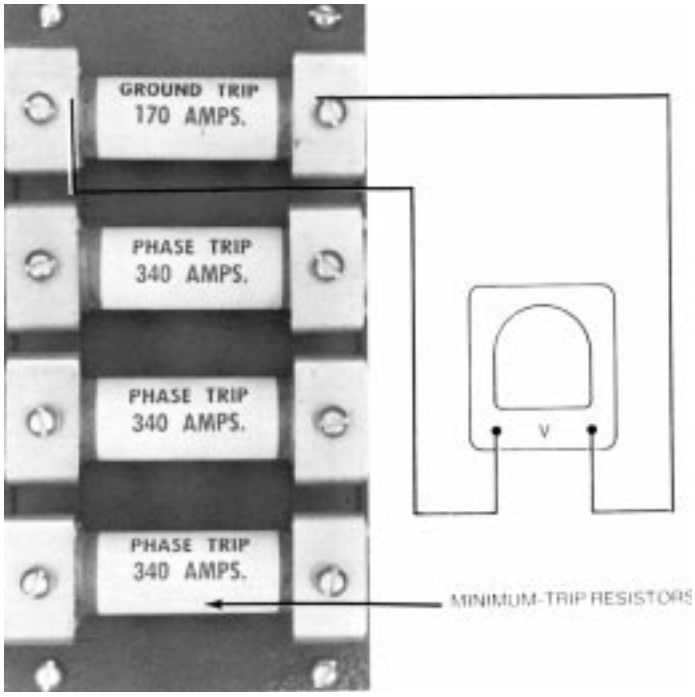

Figure 22. 82040KMA
Measured voltage across minimum-trip resistors.

NOTE: The above voltages are proportional to the recloser line current and can be used to calculate the actual load current on the different phases, using a digital AC voltmeter such as a Fluke 77 series. The following formula can be used.

$$\text{Line Amps} = \frac{(\text{Volts on resistor}) \times (\text{Resistor value amp})}{0.17}$$

Example: 0.023-volts (23-millivolts) measured across a 560-amp phase resistor is equivalent to 75.7-amps recloser-load current.Total accuracy is approximately ±5%.

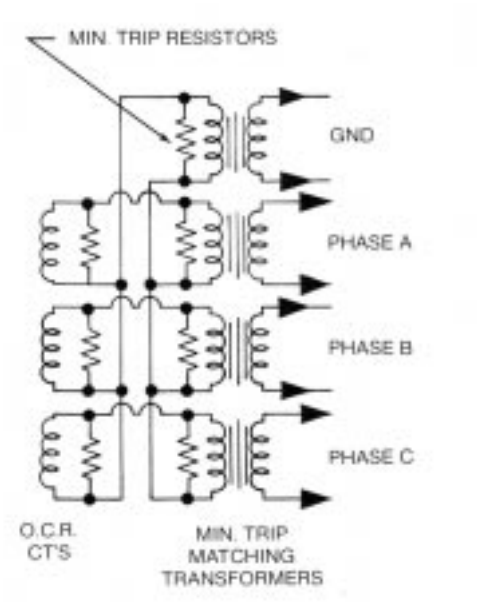

Figure 23.
Block diagram of matching transformers (Table 2). See Figure 8 for complete block diagram.

2. Measure voltage across matching transformer secondaries (Figures 23 and 24) with 100% of minimum-trip current applied to control. The test terminals on "T1 " are shown in Table
2. The voltages should be:
- Phase Transformers—6.5-Vac
- Ground Transformers—1.2-Vac

Failure to get these voltage readings can be a result of:
A. Opens in current source, control cable, matching transformer windings, or wiring to the transformers and associated components.
B. Shorts in the control's male input-cable receptacle.

CAUTION: When measuring voltage between the violet and gray leads be careful not to short between the gray wire and the B+ terminal. If the gray wire is shorted to the B+ terminal the Phase Trip #1 board will be permanently damaged.

NOTE: Matching transformers are interchangeable between Form 2, 3, and 3A controls.

TABLE 2
Terminal Strip T1 Test Points for Matching Transformers (100% Minimum-Trip) (Figures 23 and 24)

Transformer	Terminal Position	Voltage Reading (Vac)
GND	BRO—RED	1.2
Aϕ	ORG—YEL	6.5
Bϕ	GRN—BLU	6.5
Cϕ	VI—GRY	6.5

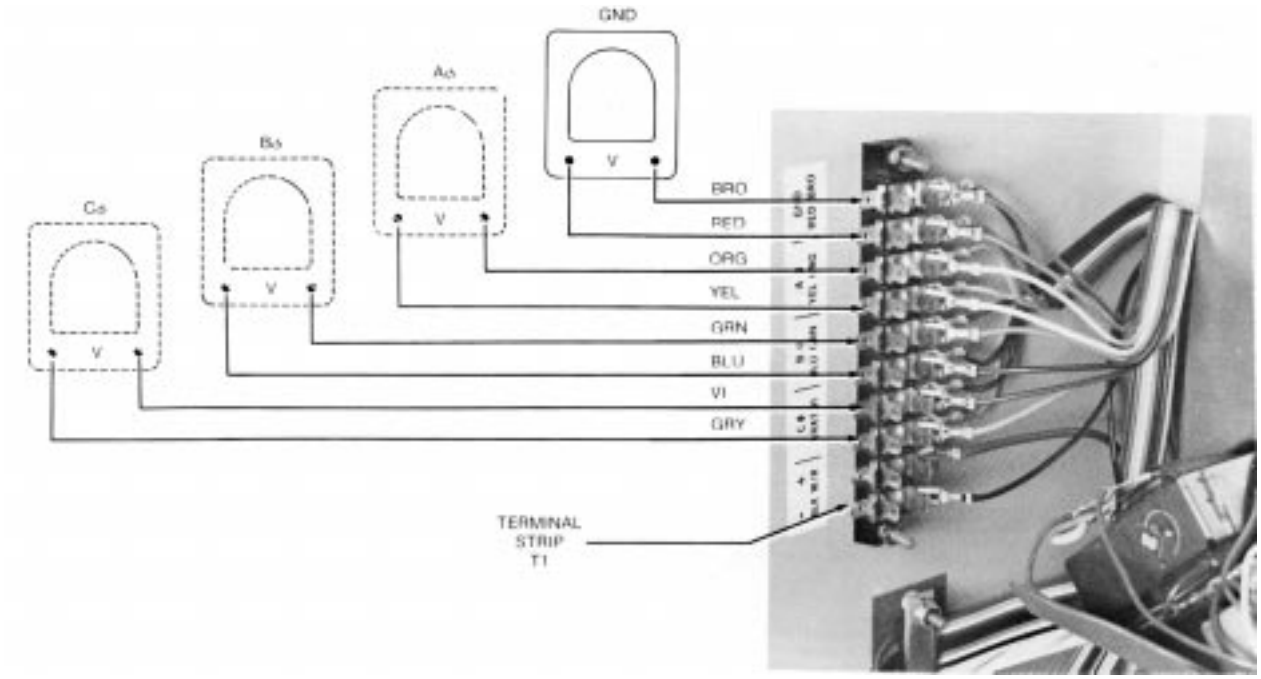

Figure 24.
Measuring voltage across matching transformers (Table 2) (control panel open, middle left hand side of control).

88950KMA

INTERNAL dc-LOAD-CURRENT SIGNAL

To check the dc-load-current output signal, measure the voltage at tie board test points listed in Table 3 at 100% minimum-trip current.

Failure to get these signals can be due to trouble in the matching transformers, or open/or shorted diodes in phase-trip No. 1 or ground-trip No. 1 circuit boards.

TABLE 3
Tie Board Test Points for dc-Load-Current Signal (100% Minimum-Trip) (Figures 25, 26 and 27)

Load Current	Terminal Position				Voltage Readings Vdc*
	Form 3		Form 3A		
	+Lead	-Lead	+Lead	-Lead	
Phase	Seq. Relay 7A	M-ph	Seq. Relay 7A	Phase Minus	6.1
Ground	Seq. Relay 7A	M-gnd	Seq. Relay 7A	Gnd Minus	0.78

*These are full-wave rectified signals.

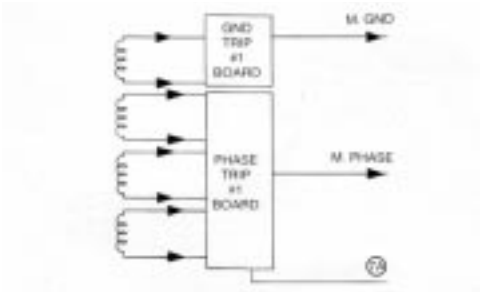

Figure 25.
Block diagram of secondary side of matching transformers and input bridge (Table 3). See Figure 8 for complete block diagram.

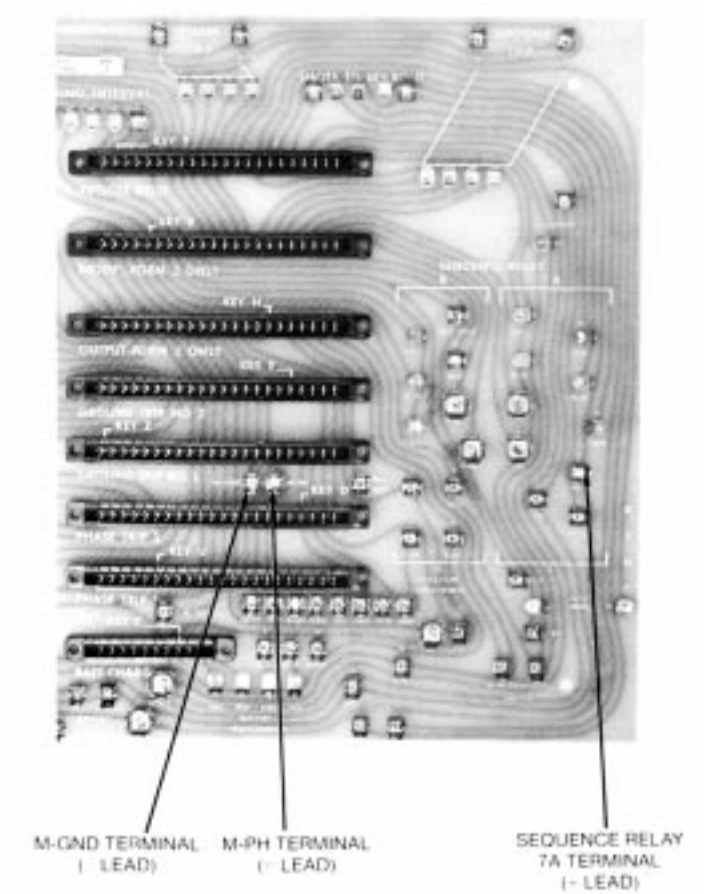

Figure 26.
Form 3 tie board test points for internal dc-load-current signal (Table 3. For relationship of terminal location on the tie board, see figures 18 and 19.

82040KMA

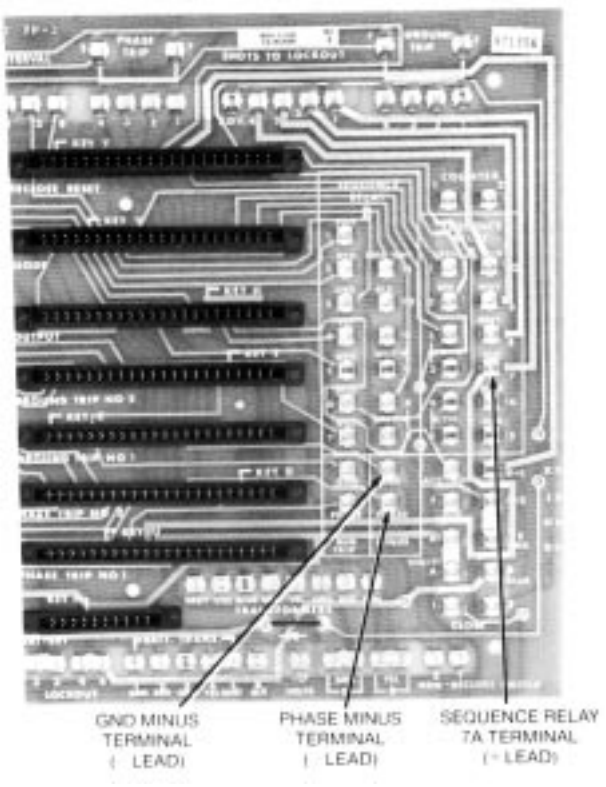

88948KMA

Figure 27.
Form 3A tie board test points for internal dc-load-current signal (Table 3). For relationship of terminal location on the tie board, see figures 20 and 21.

INTERNAL MINIMUM TRIP SIGNAL

To check the minimum-trip signal, measure the voltage at tie board test points listed in Table 4.

Failures to get these signals are most likely due to troubles on the phase-trip No. 2 or ground-trip No. 2 circuit boards or possibly with the phase-trip No.1 or ground-trip No.1 boards. Battery voltage below 21-Vdc will cause control misoperation of the minimum-trip, timing and trip signals of the control. Battery voltage above 23 volts will operate the circuits correctly. Refer to “Battery Maintenance,” page 35, for battery charging and testing information.

TABLE 4
Tie Board Test Points for Minimum-Trip Signal Figures 28, 29, and 30)

Minimum Trip Signal	Terminal Position				Voltage Reading Vdc	
	Form 3		Form 3A			
	+Lead	-Lead	+Lead	-Lead	No Fault	120% Minimum-Trip*
Phase	Ph Min. Trip	Seq. Relay 7A	Ph Min. Trip	Seq. Relay 7A	25 or Battery	0.30 Max.
Ground	Gnd. Min. Trip	Seq. Relay 7A	Gnd. Min. Trip	Seq. Relay 7A	25 or Battery	0.30 Max.

*Voltage reading will last only for the duration of the clearing time of the control and recloser/simulator.

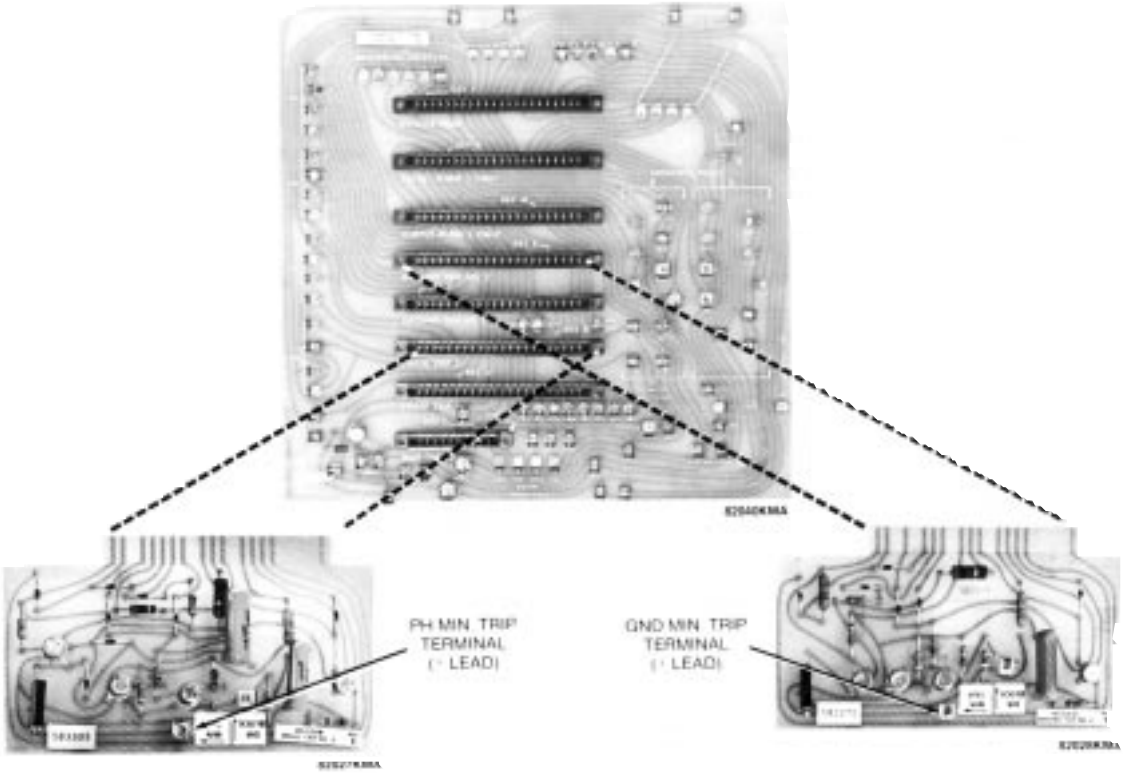

Figure 28.
Form 3 tie board test points for internal minimum-trip signal (Table 4). For relationship of terminal location on the tie board, see Figures 18 and 19.

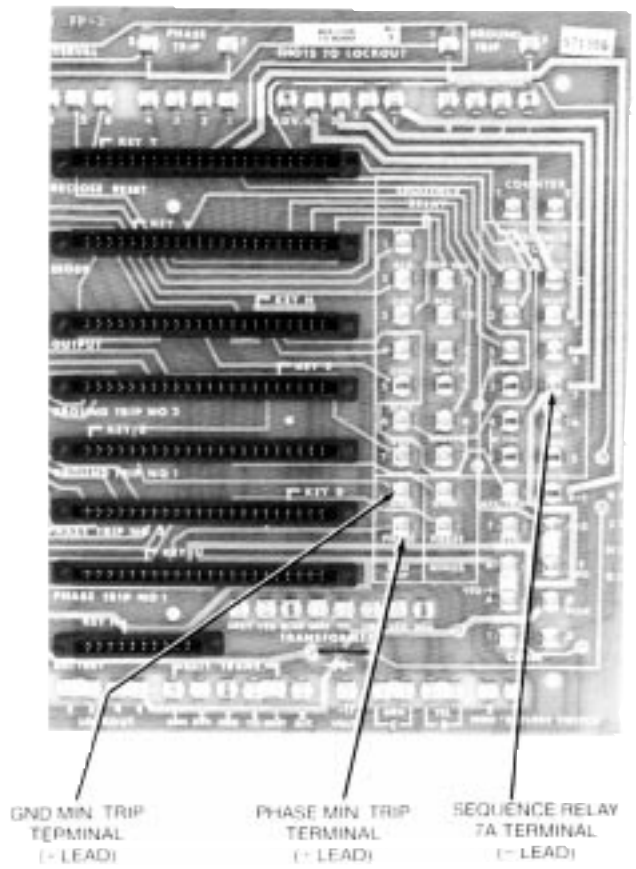

Figure 29. 88948KMA
Form 3A tie board test points for internal minimum-trip signal (Table 4). For relationship of terminal location on the tie board, see Figures 20 and 21.

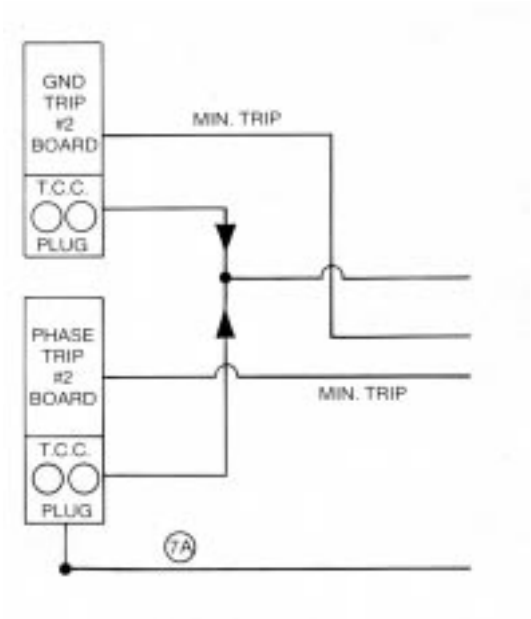

Figure 30.
Block diagram of internal minimum-trip signal circuit (Table 4). See Figure 8 for complete block diagram.

TIME CURRENT CHARACTERISTIC CURVES (TCC)

NOTE: Since some volt meter burdens will change control calibration, this test will only verify TCC plug operation.

To check the charging of the phase-or-ground-TCC plug, measure the voltage drop at the tie board and the TCC socket pin test points listed in Table 5. Make connections and raise current to120% minimum-trip level.

Failure to get a sudden voltage change for a fast TCC plug or a gradual change for a slow TCC plug can be caused by trouble on the phase-trip No. 2 or ground-trip No. 2 board, trouble on the various timing plugs, open diodes on the diode board, or open contacts on the phase- or ground-trip socket No. 1 selector switches.*

* Problems on selector switches are rare on ME controls above S/N 6000.

TABLE 5
Tie Board/TCC Socket Pin Test Points for TCC Charging (120% Minimum-Trip) (Figures 31, 32 and 33)

TCC Curve	Test Points Form 3 and 3A		Voltage Drop Vdc
	+Lead (Phase or Ground TCC Plug)	-Lead	
Fast	No. 1 pin, No. 2 TCC	Sequence Relay 7A	24 - 7*
Slow	No. 1 pin, No. 2 TCC	Sequence Relay 7A	24 - 7**

* On a fast TCC curve the voltage will drop from 24-Vdc to less than 7-Vdc the instant the fault current increases above minimum-trip.
* * On a delayed TCC plug an obvious time delay can be observed as the meter voltage slowly drops from 24-Vdc to 7-Vdc at which time the unit trips

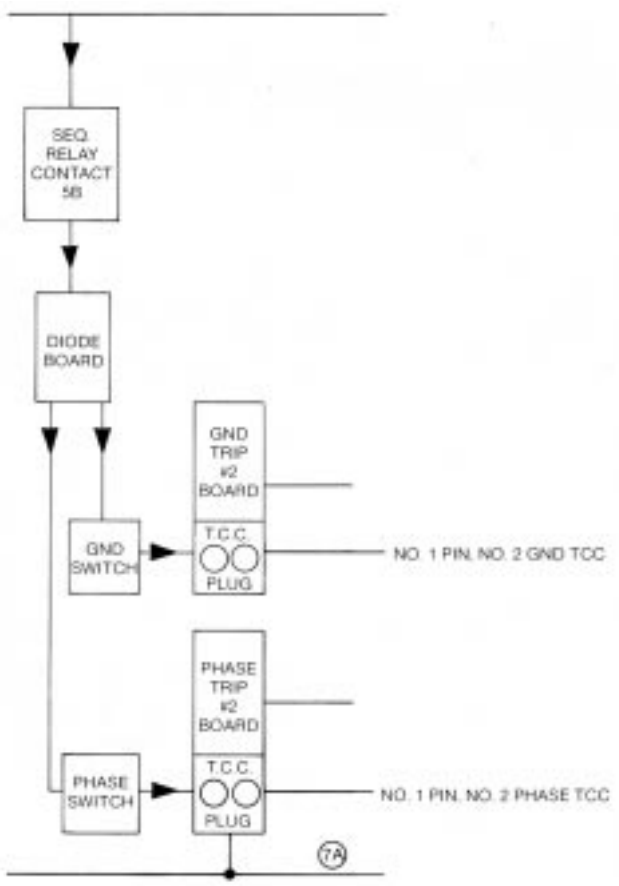

Figure 31.
Block diagram of time-current circuit (Table 5). See Figure 8 for complete block diagram.

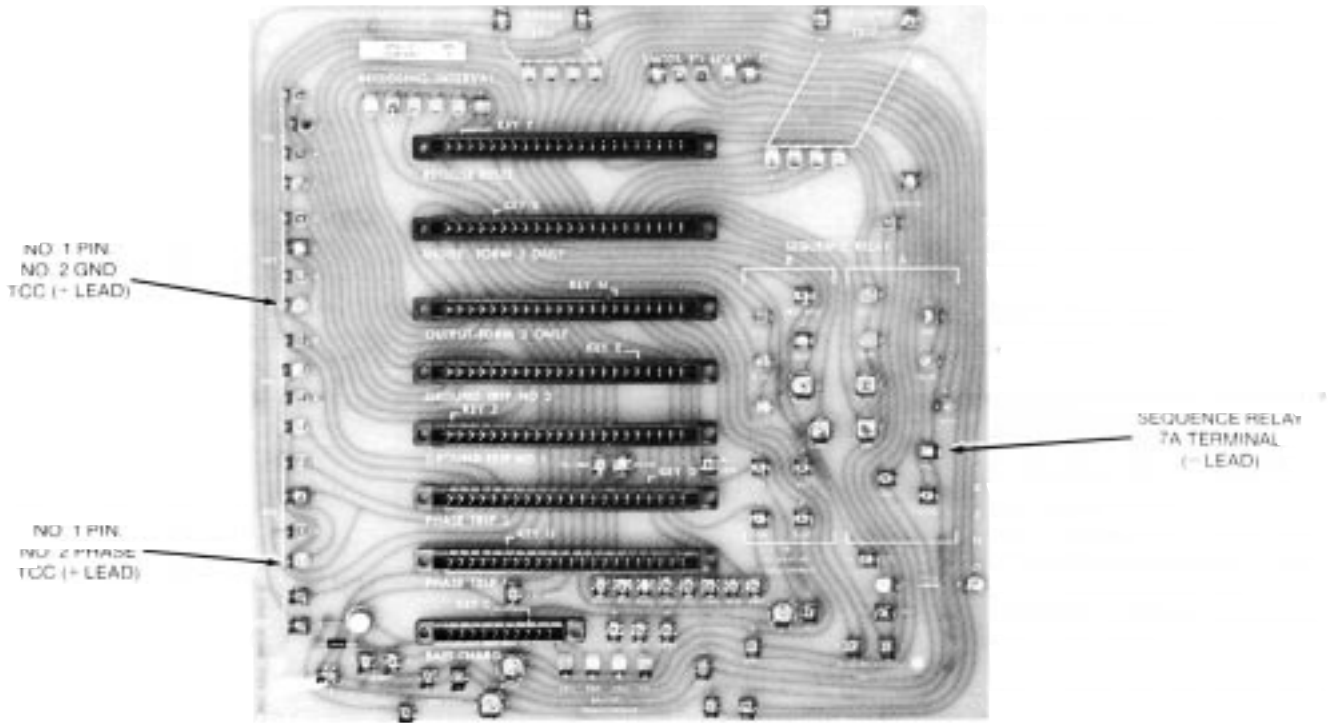

Figure 32. 82040KMA
Form 3 test points for TCC operation (Table 5). For relationships of terminal/pin location on the tie board and rear of front panel, see Figures 18 and 19.

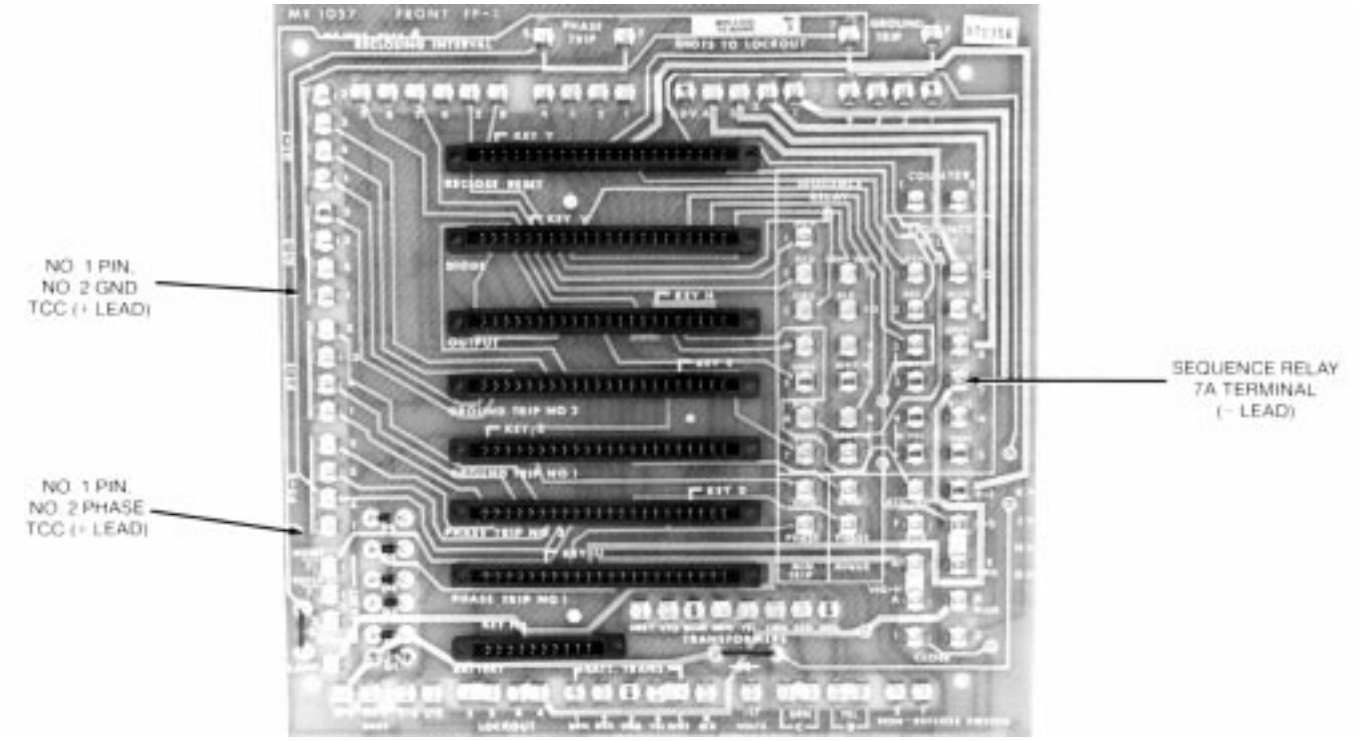

Figure 33. 88948KMA
Form 3 test points for TCC operation (Table 5). For relationships of terminal/pin location on the tie board and rear of front panel, see Figures 20 and 21.

CONTROL-RECLOSER OPERATION

To provide a better understanding of the control operational circuit checks and the relationship between the recloser circuits and the control output, typical recloser connections to the ME electronic control are shown in Figures 34 and 35. For detailed information on electronic recloser/control operational circuits, consult the maintenance manual for your recloser (see Appendix 11).

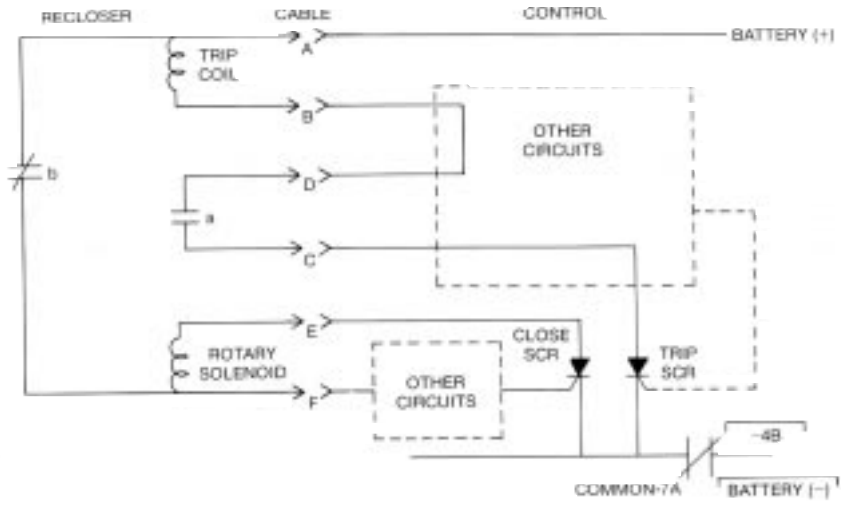

Figure 34.
Typical RXE and WE series reclosers with electronic control cable connection.

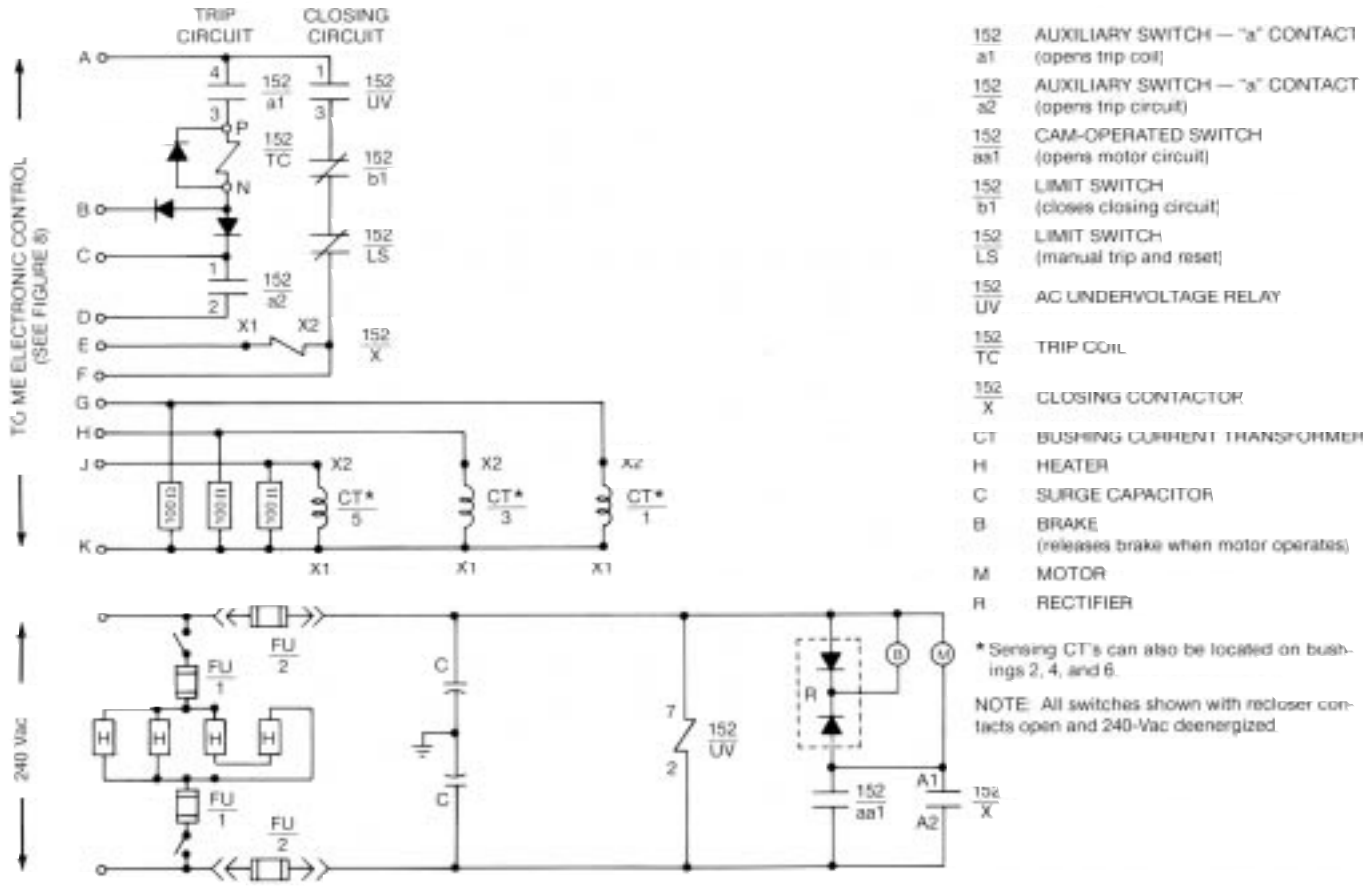

Figure 35.
Typical motor operated recloser (VSAT shown) and electronic control connection.

To check voltage changes during typical recloser-trip operations, measure voltage at test points listed in Table 6.

Failure to get voltage readings indicated usually indicates problems in the recloser. Consult the recloser maintenance manual for testing and service information (see Appendix 11).

TABLE 6
Test Points for Trip Operating Circuit (Figures 36, 37, and 38)

Test Points		Voltage Vdc Control in Lockout	Voltage Vdc Control Recloser Closed No Fault	Voltage Vdc Trip Signal*	Voltage Vdc Recloser open, But Not Locked out
+Lead Form 3 and 3A	-Lead Form 3 and 3A				
Tie Board A	Middle Battery Test Terminal	24	24	24	24
Seq. Relay 7A	Middle Battery Test Terminal	24	0	0	0
Tie Board B	Middle Battery Test Terminal	24	24	2.2	24

* Trip signals have a time duration of only 0.04- to 0.5-seconds, depending on recloser type. If voltage on tie board B drops to 2.2-volts for longer than 5-seconds, the recloser failed to trip. Unplug the control battery.

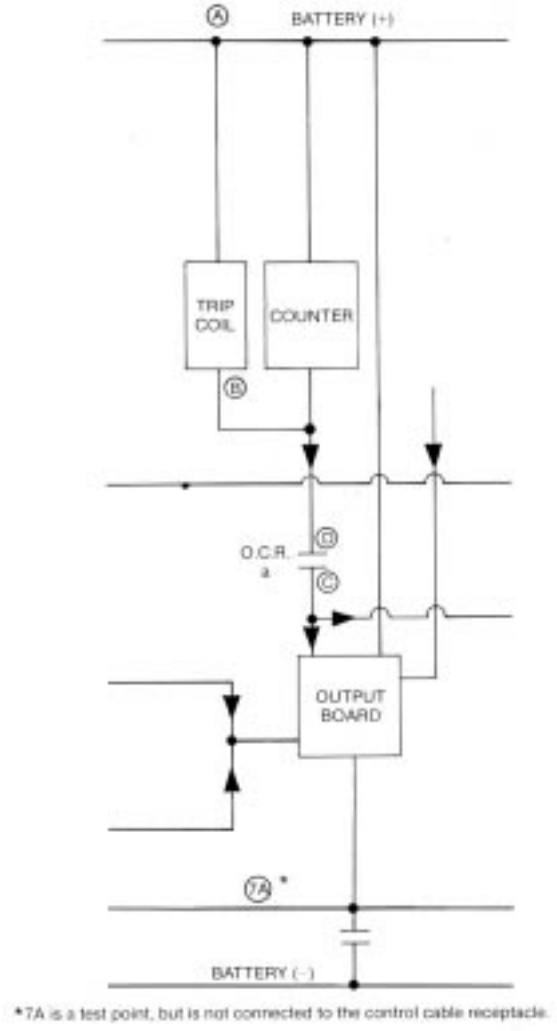

Figure 36.
Block diagram of trip-operating (Table 6). See Figure 8 for complete block diagram. Letters in circles (A,B, etc.) are test points and correspond to control cable receptacle pin connection points.

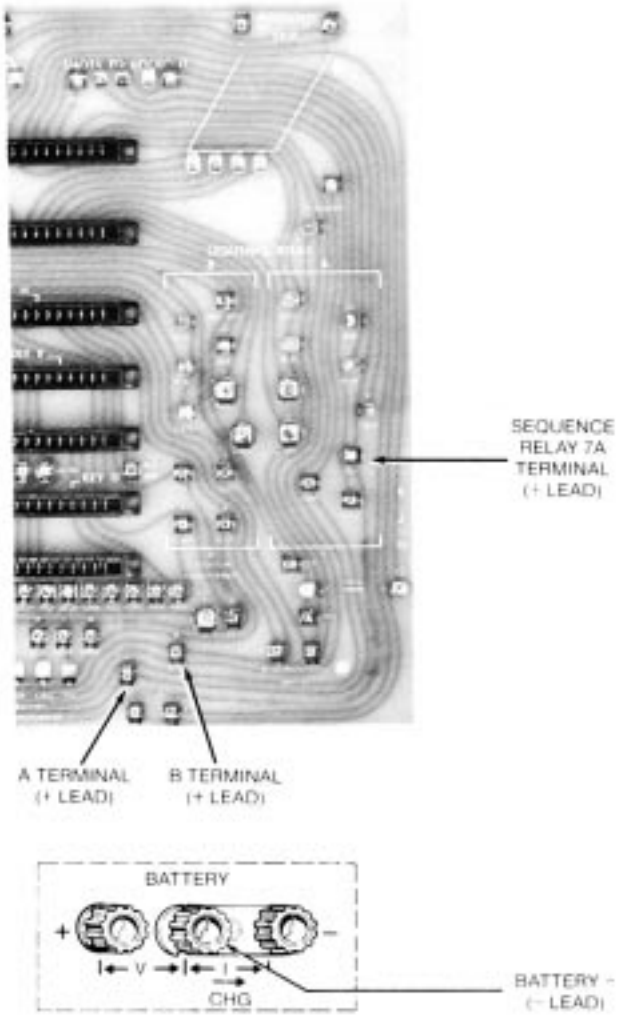

82040KMA

Figure 37.
Form 3 test points of recloser-trip operations (Table 6). For relationship of terminal test points, see Figures 2, 18 and 19.

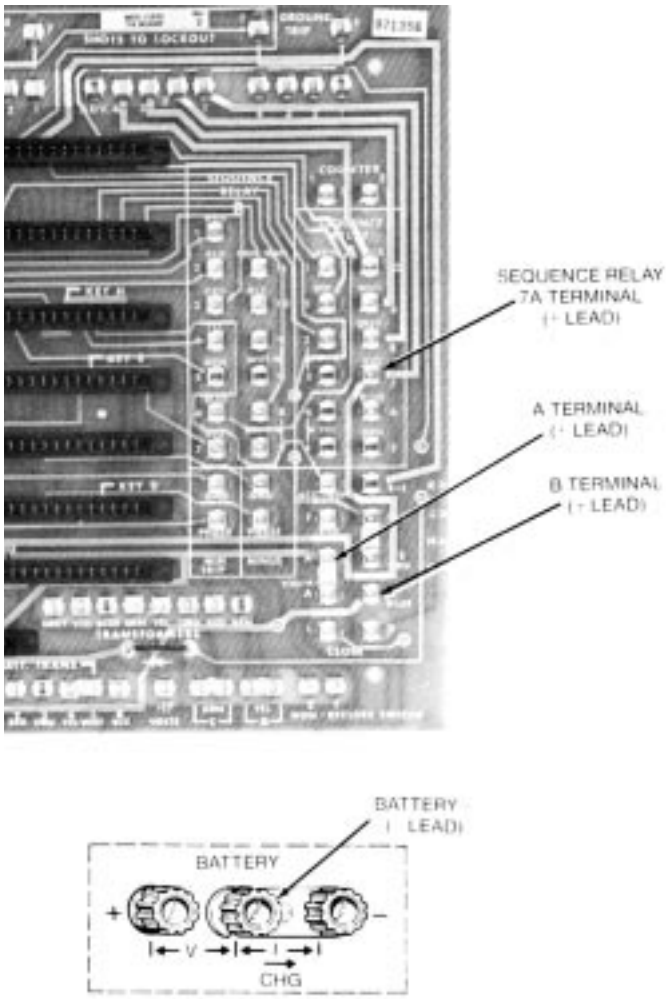

88948KMA

Figure 38.
Form 3A test points for recloser-trip operation (Table 6). For relationship of terminal tet points, see Figures 2, 20, and 21.

To check voltage changes during closing from lockout, tripping and reclosing, measure voltages at test points listed in Table 7.

Failure to get voltage readings indicated usually indicates problems in the recloser. Consult the recloser maintenance manual for testing and service information (see Appendix 11).

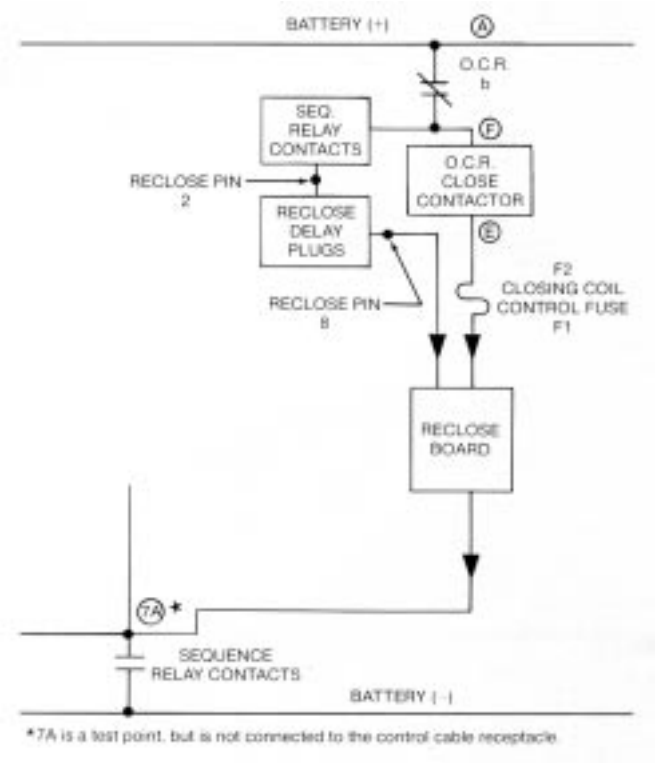

Figure 39.
Block diagram of closing, tripping and reclosing circuit (Table 7). See Figure 8 for complete block diagram. Letters in circles (A, B, etc.) are test points and correspond to control cable receptacle pin connection points.

TABLE7
Test Points for Closing, Tripping and Reclosing Circuit (Figures 39, 40, 41)

Test Points		Voltage Vdc	Voltage Vdc	Voltage Vdc	Voltage Vdc	Voltage Vdc
+Lead Form 3 and 3A	-Lead Form 3 and 3A	Control in Lockout	Control Reset	Closing* Coil Energized	Control Closed	Reclosed Timing
Seq. Relay	Middle Battery Test Terminal	25	0	0	0	0
F-1	Middle Battery Test Terminal	25	25	1	0	25
F-2	Middle Battery Test Terminal	25	25	1.5**	0	25
E	Middle Battery Test Terminal	25	25	1.5**	0	25
F	Middle Battery Test Terminal	25	25	25	0	25
A	Middle Battery Test Terminal	25	25	25	25	25
8	Middle Battery Test Terminal	1	0	0	0	0 to 15***

* Closing signal is about 0.5-seconds, depending on recloser type.
* * Value may vary depending on recloser type
***Recloser will close when approximately 15-Vdc is reached and will drop to zero after reclose operation. This voltage measurement tests the circuitry of the Recloser-Reset board (MEA381)

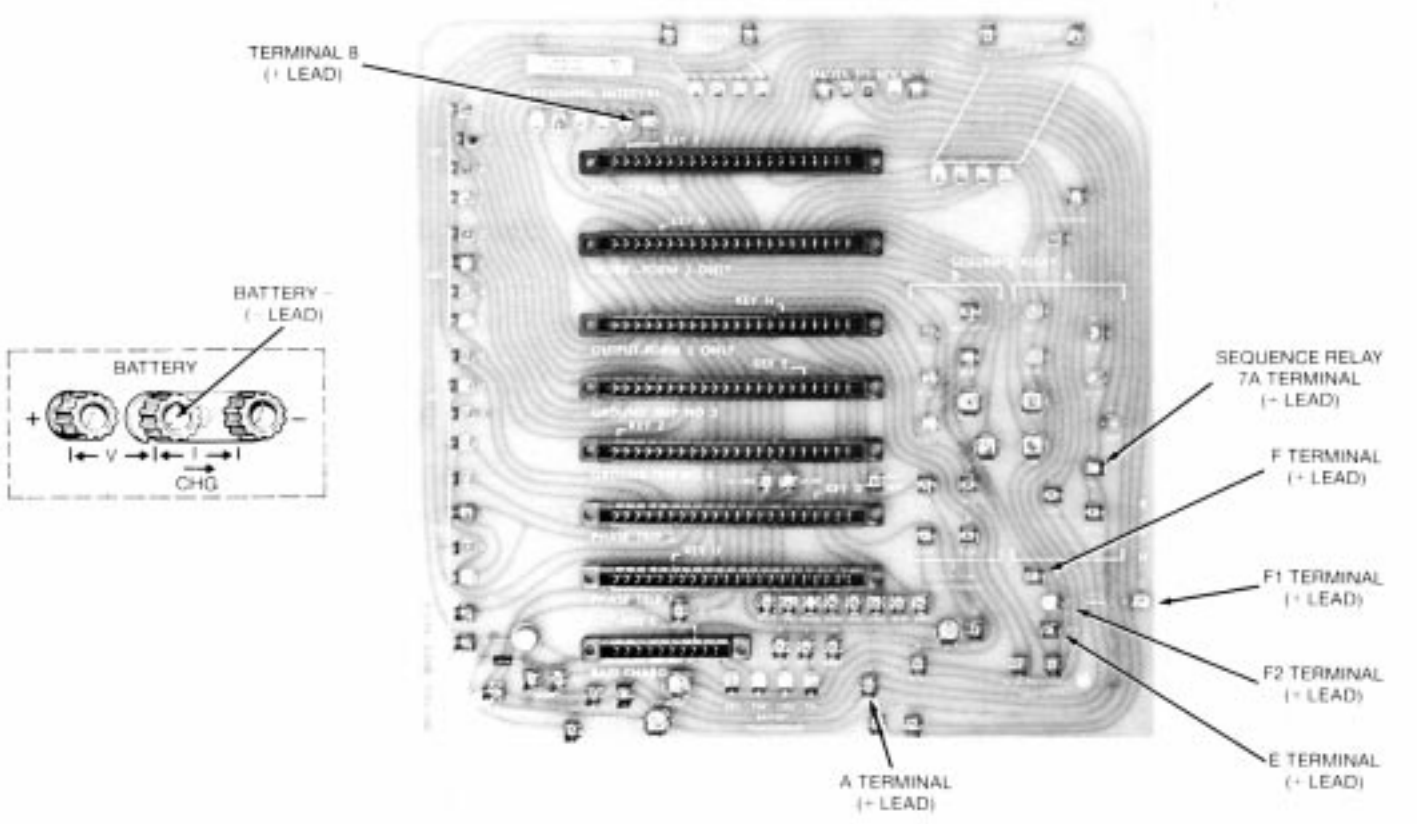

Figure 40. 82040KMA
Form 3 test points for closing, tripping and reclosing operation (Table 7). For relationship of terminal test points, see Figures 2, 18 and 19.

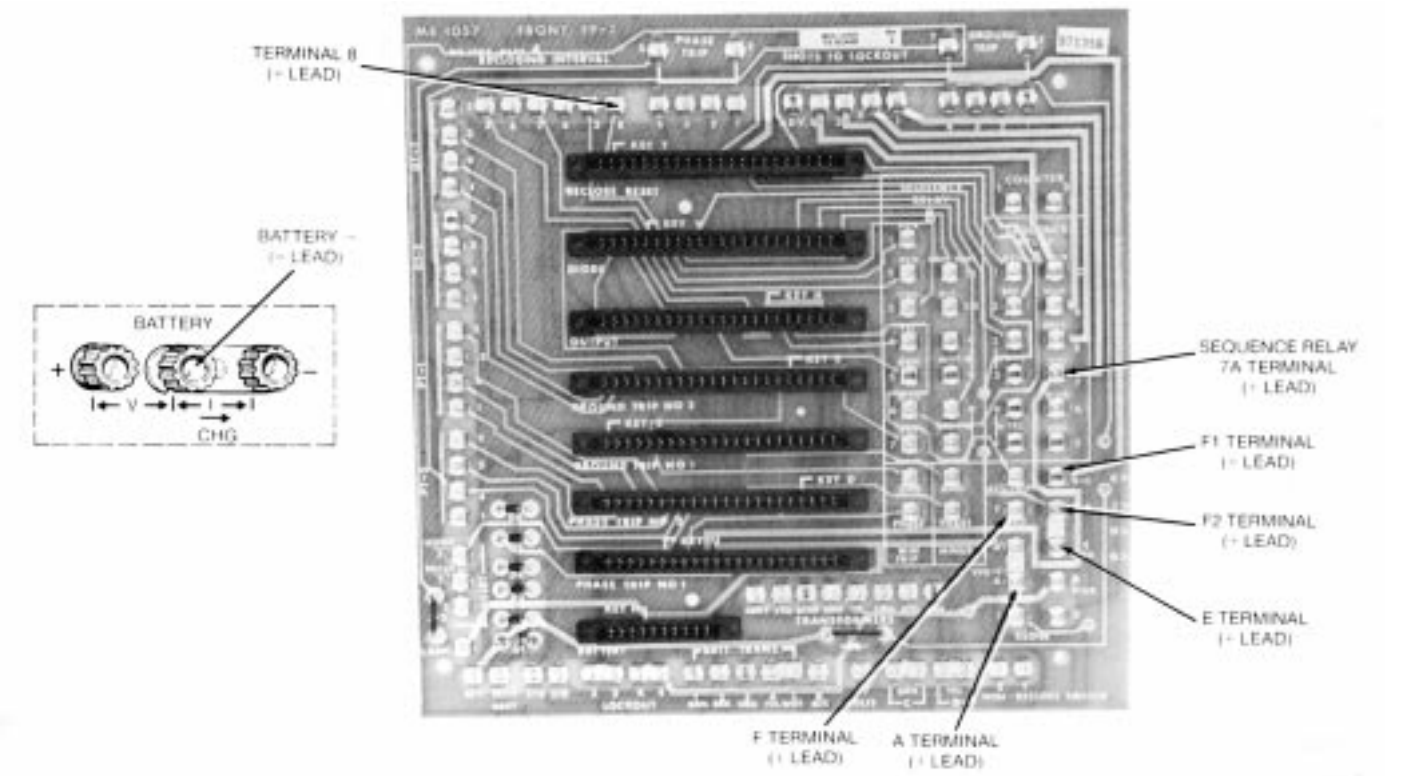

Figure 41. 88948KMA
Form 3 test points for closing, tripping and reclosing opeation (Table 7). For relationship of terminal test points, see Figures 2, 18 and 19.

To check voltage changes during trip and reset operations, measure voltage at test points listed in Table 8.

Failure to get voltage readings indicated usually indicates problems in the reset-reclose circuit board. Repair involves replacement of the circuit board. Unstable minimum-trip voltage levels will upset or prevent automatic reset operation.

TABLE 8
Test Points for Trip and Reset Circuit (Figures 42, 43 and 44).

Test Points		Voltage Vdc Tripped	Voltage Vdc Reclose Into Low Level Fault (120% Minimum-Trip)	Voltage Vdc Reclose Into No Fault
+Lead Form 3 and 3A	-Lead Form 3 and 3A			
Reset #2	Middle Battery Test Terminal	0	0.7	0.7 to 15*
Phase Trip #2 Board, Minimum-Trip	Middle Battery Test Terminal	25/0	0	25

* At 15-Vdc automatic reset occurs returning voltage levels to "control in home" condition. Voltage returns to zero after rest operation.

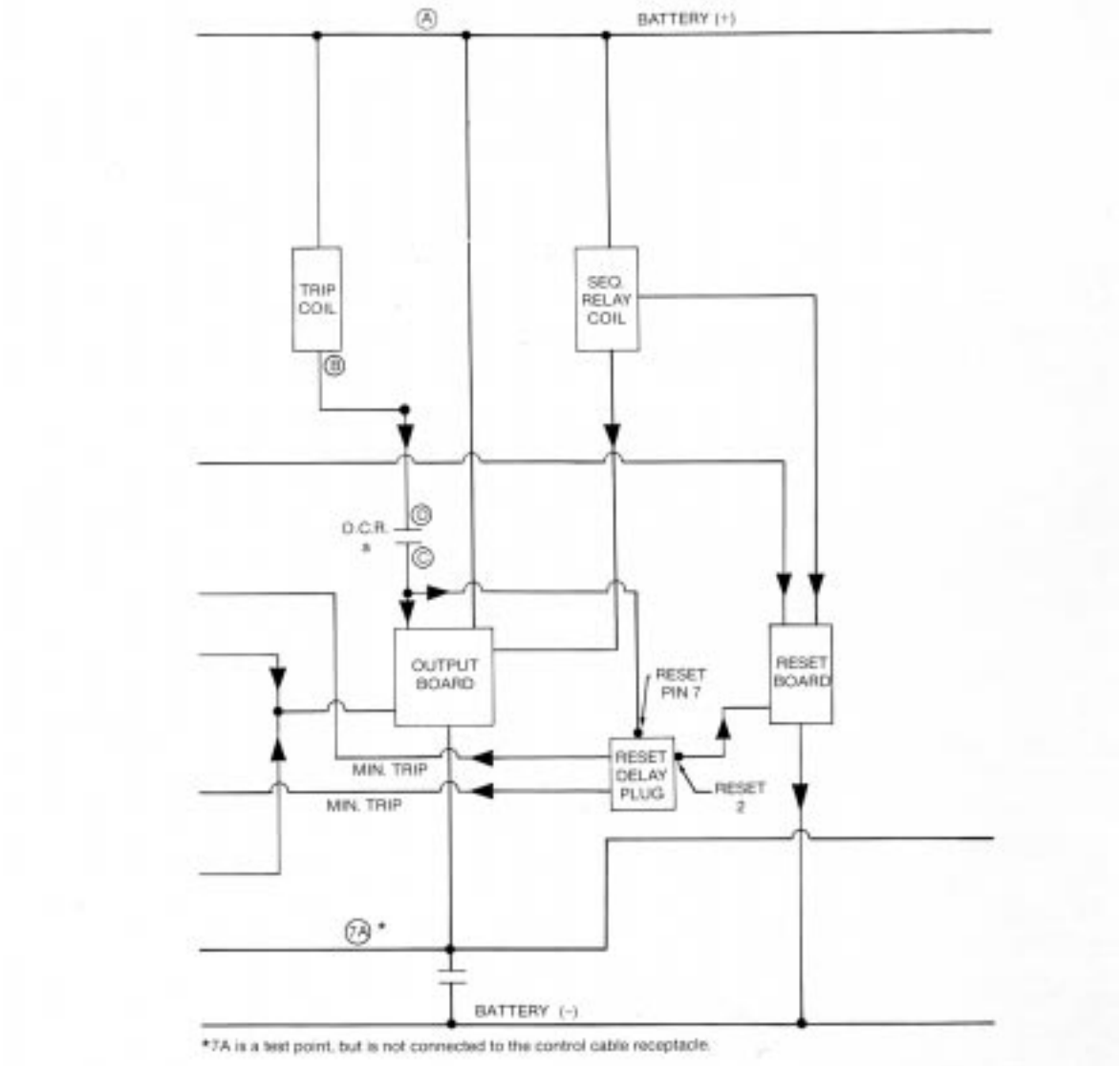

Figure 42.
Block diagram of trip-reset circuit (Table 8). See figure 8 for complete block diagram. Letters in circle (A,B, etc.) are test points and correspond to control cable receptacle pin connection points.

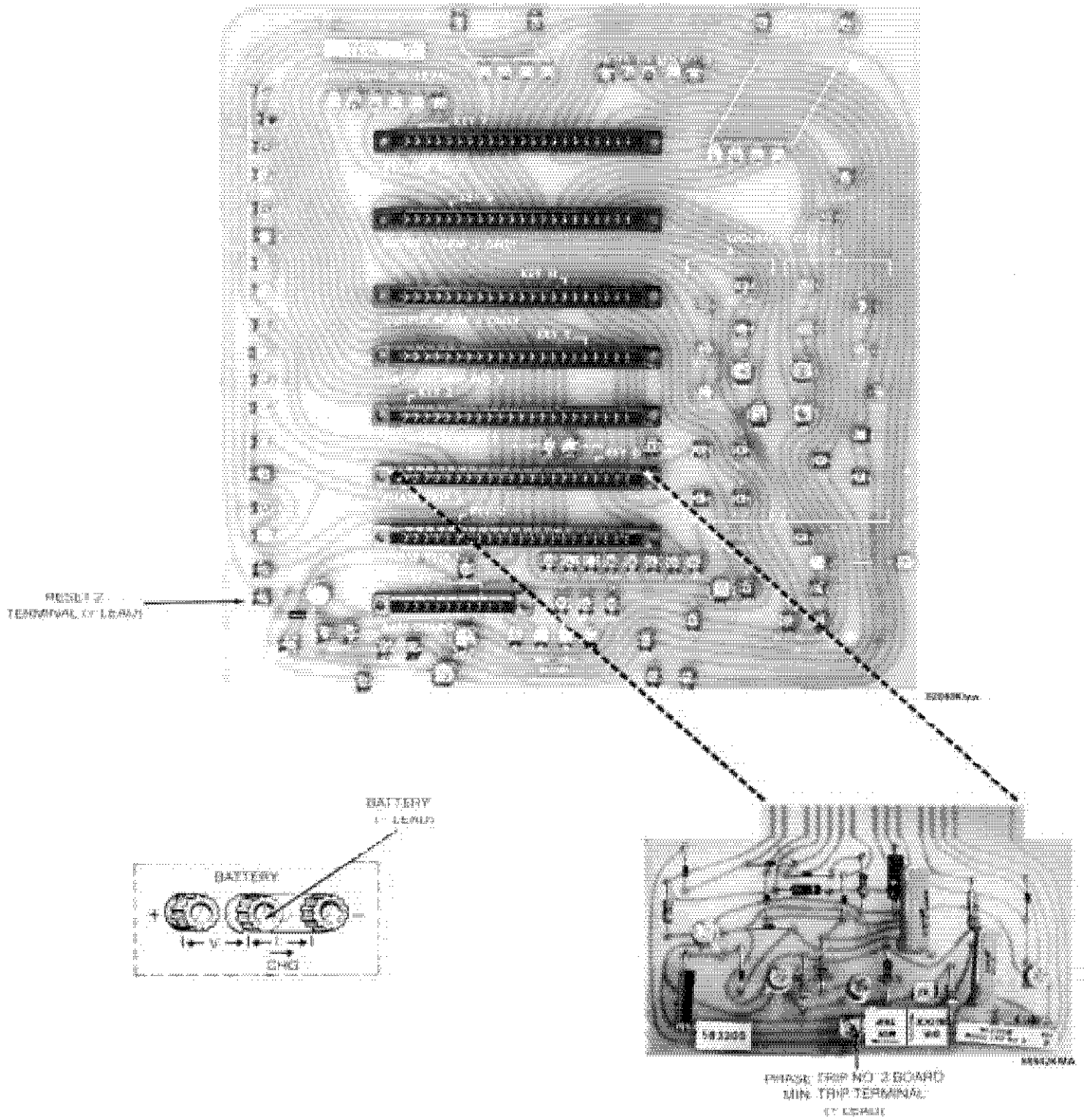

Figure 43.
Form 3 test points for trip-reset operation (Table 8). For relationship of terminal test points, see Figures 2, 18 and 19.

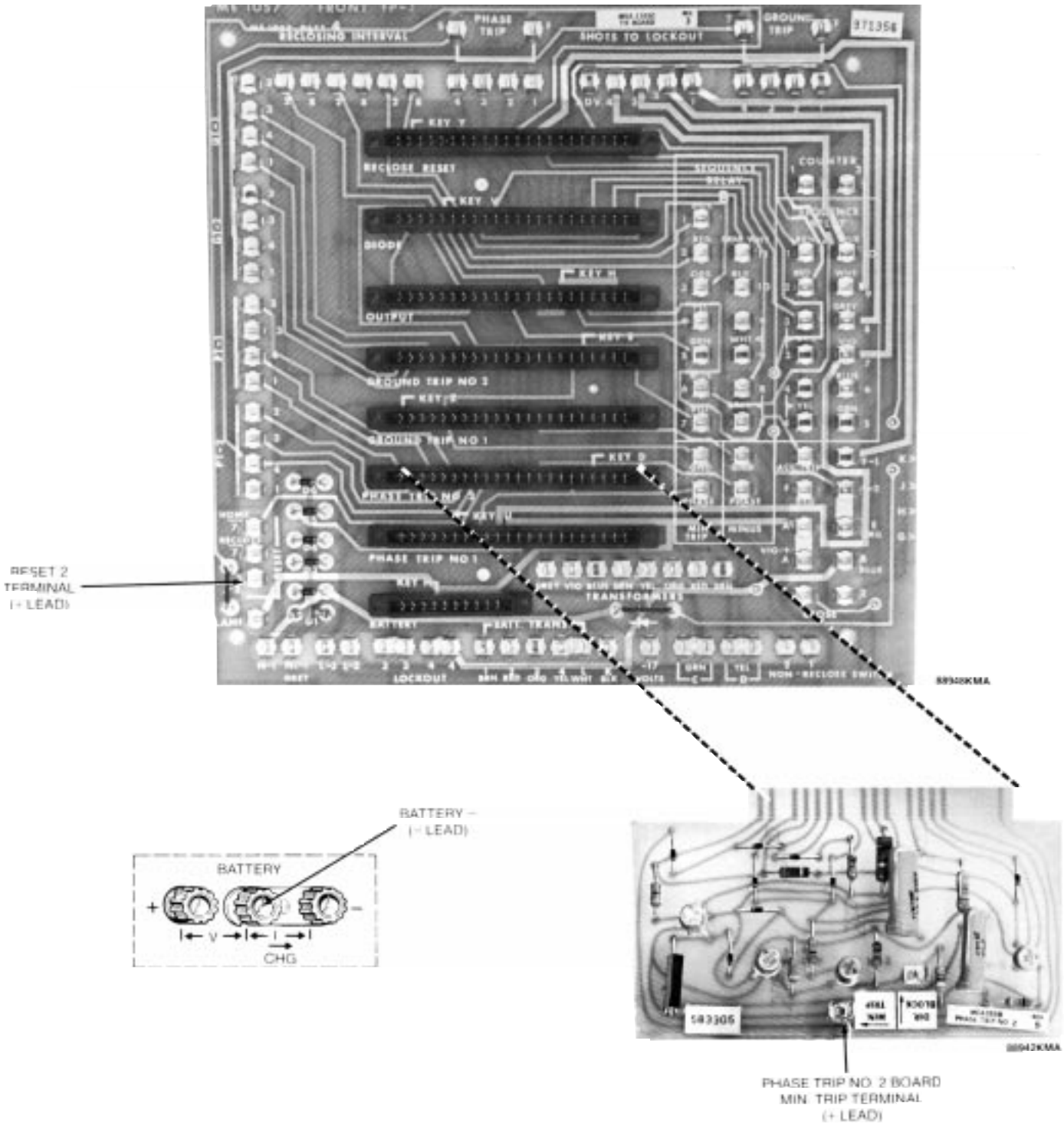

Figure 44.
Form 3A test points for trip-reset operation (Table 8). For relationship of terminal test points, see Figures 2, 20, and 21.

MAJOR CONTROL DAMAGE

To verify the condition of the Form 3 and 3A tie board in the event of major control damage, check the continuity of common tie board terminals listed in Table 9 (Form 3) and Table 10 (Form 3A).

Failure to get continuity for any of the test points indicates tie board failure. Failure in other circuitry is extremely rare.

TABLE 9
Form 3 Tie Board Continuity Checks (Figure 45)

Continuity from Terminals "B+" To	Continuity from Terminals "B-" To
LampL A 5A Counter C-1	N 4B

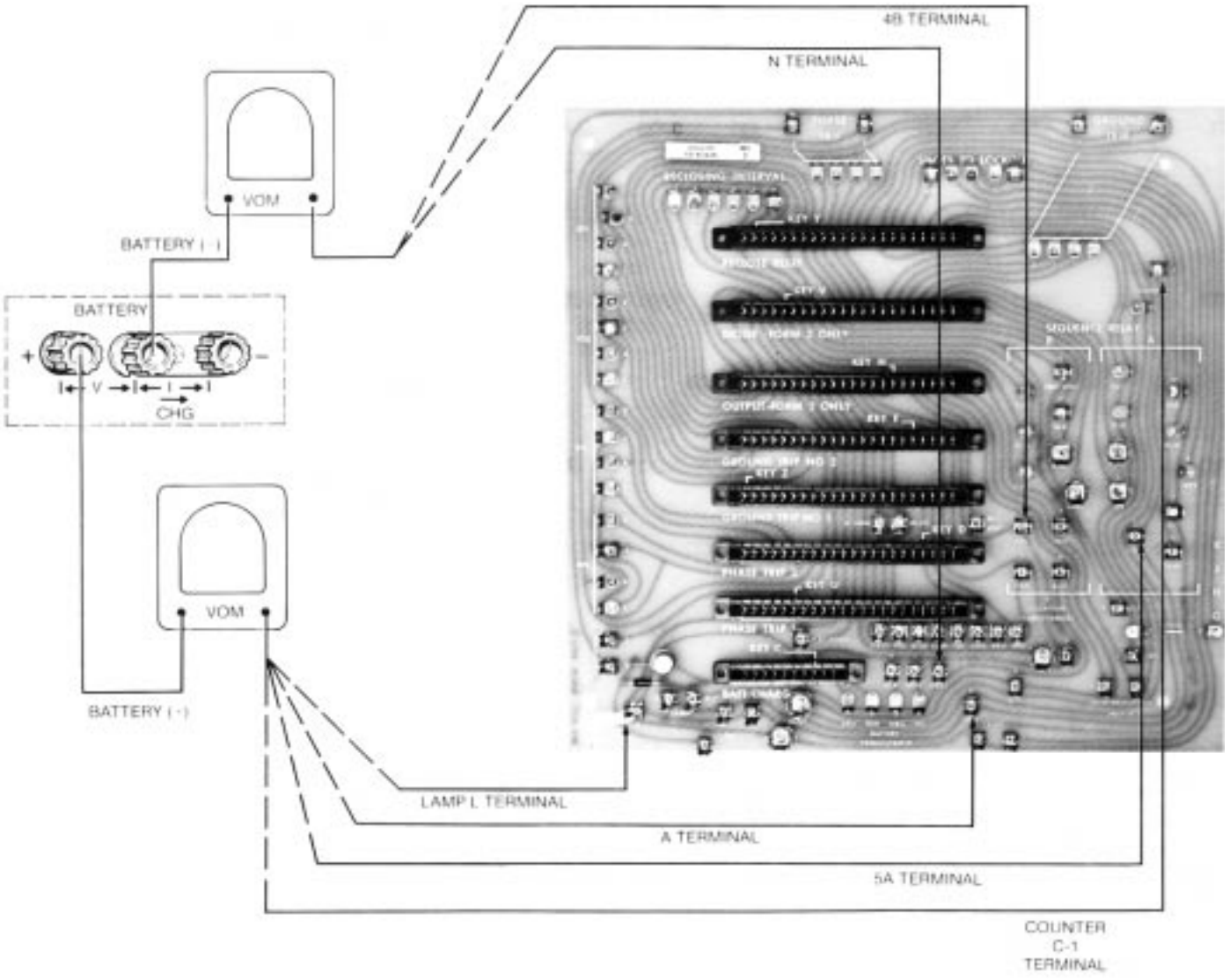

82040KMA

Figure 45.
Form 3 continuity checks (Table 9). For relationship of terminal test points, see Figures 2, 18, and 19.

TABLE 10
Form 3A Tie Board Continuity Checks (Figure 456)

Continuity from Terminals "A+" To	Continuity from Terminals "N-1" To*
Lamp 5A Counter 1	L-2 4B

* For controls with capacitor backup trip accessory (KA1119ME or KA1122ME, check continuity from diode point shown on Figure 47.

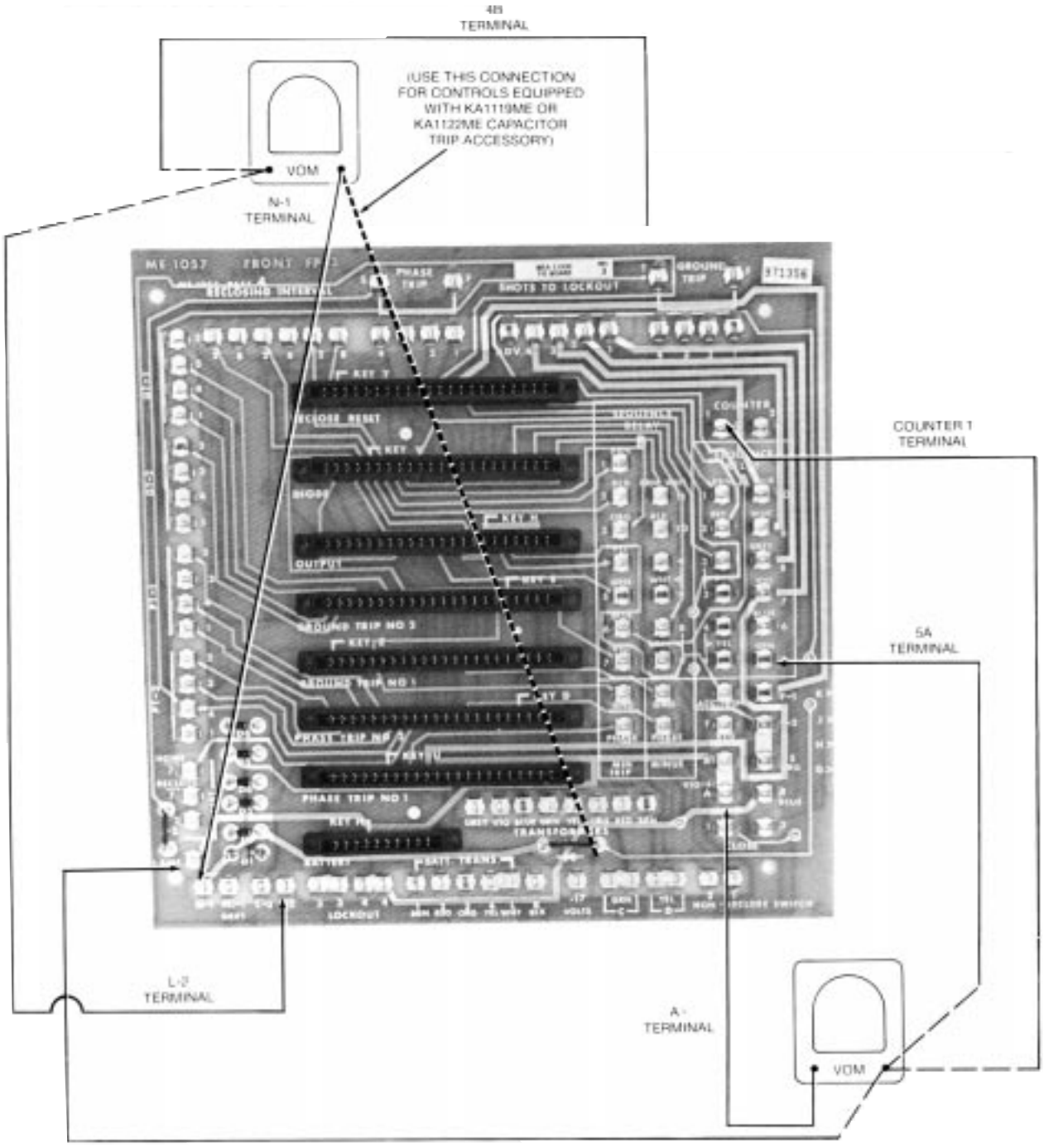

88948KMA

Figure 46.
Form 3A continuity checks (Table 10). For relationship of terminal test points, see Figures 20 and 21.

BATTERY CHARGING

To check the battery charging operation:

1. Make sure control is in home (reset) position by moving manual operator to “CLOSE.”

2. Connect a dc milliammeter into right hand pair of battery-test terminals(←I→),see Figure 47. Loosen both terminals slightly and disconnect shorting link from between terminals.

3. With battery charger deenergized, current will flow opposite to the direction shown by CHG. Under normal conditions, quiescent drain will be 1-1/2-to 2-mA. However, shorter time reset plugs and certain accessories can, as shown in Table 11, increase quiescent drain above nominal value.

NOTE: To verify the charge/discharge polarity of the test meter, momentarily actuate the LAMP/LOCKOUT TEST toggle switch to "LAMP TEST." The current measured is a discharge current.

TABLE 11
Quiescent-Battery Drain Above Normal*

Description	Drain (mA)
3-second reset plug	2.3
10-second reset plug	0.8
Sequence coordination accessory (if blocked in home)	0.8
Remote minimum-trip double-supervisory contacts closed)	6
Targets	1.9

* For complete list of accessory quiescent drain, see the Service Information manual on the MET Tester, S28O-76-1.

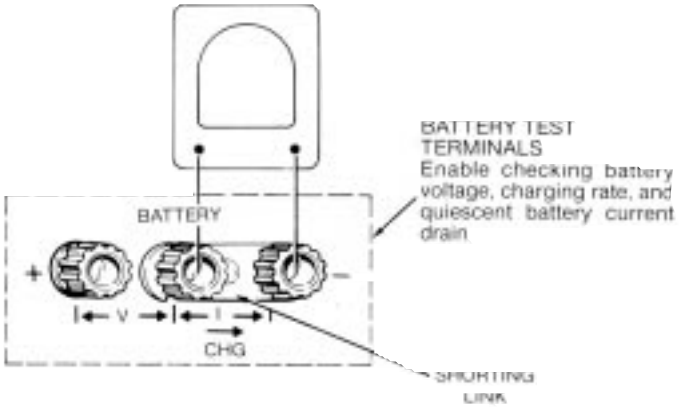

Figure 47.
Battery test terminals.

4. With the battery charger energized, current will flow in the direction shown by CHG. The charging rate should be approximately 17-mA minus the discharge rate measured in Step 3, if the control is equipped with the fixed rate battery charging board (MEA 388-1). The charging rate will vary with internal control cabinet temperature if equipped with the temperature regulated charging board (MEA 1172), See Figure 48). A typical charging rate will be about 27 mA, at normal room temperature.

NOTE: The 17-mA charging rate is a nominal value based on a 27-volt battery and rated input parameters (e.g. 120-Vac). Even under these standard conditions. a variation of ±2-mA may be observed in the charging rate.

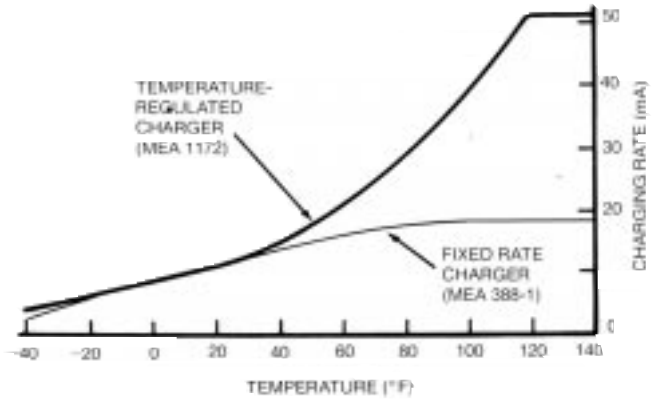

Figure 48.
Comparison of charging rates.

Prior to 1978 many recloser-control combinations (control serial numbers below 26000) had the battery-charging circuitry in the recloser. Refer to ME control installation manual S280-75-1 for exact Control-Recloser interchangeability.

- In the RE & WE family (Form 3 ME Control era), where the charging supply is taken from the line on B phase, at least 40-amps must flow in B phase for a minimum of 12 hours per 24-hour day to maintain an adequate battery charge.
- In the motor operated equipment (VS, ME and CE family) manufactured between 1969 and 1978 the charging supply is taken from the 240-Vac motor supply that is required to operate the recloser. To maintain battery charge on these units, the 240-Vac supply must be connected to the recloser, and the recloser and control must be connected via the control cable. After 1978 (above serial number 26000) most controls were provided with battery-charging circuitry within the control itself. These require 120-Vac (or 240-Vac) to be connected to the control’s power-supply-input terminals.

Failure to get the proper charging rate can be caused by either a high control quiescent-battery discharge rate or by a malfunction in the battery-charger circuitry. To help isolate problems in the battery-charging circuitry, see Figures 49, 50 and 51 and Table 12.

NOTE: A totally discharged battery may indicate an excessive quiescent-battery discharge rate due to a problem in the ME control. Test quiescent-battery discharge rate with a fully charged battery.

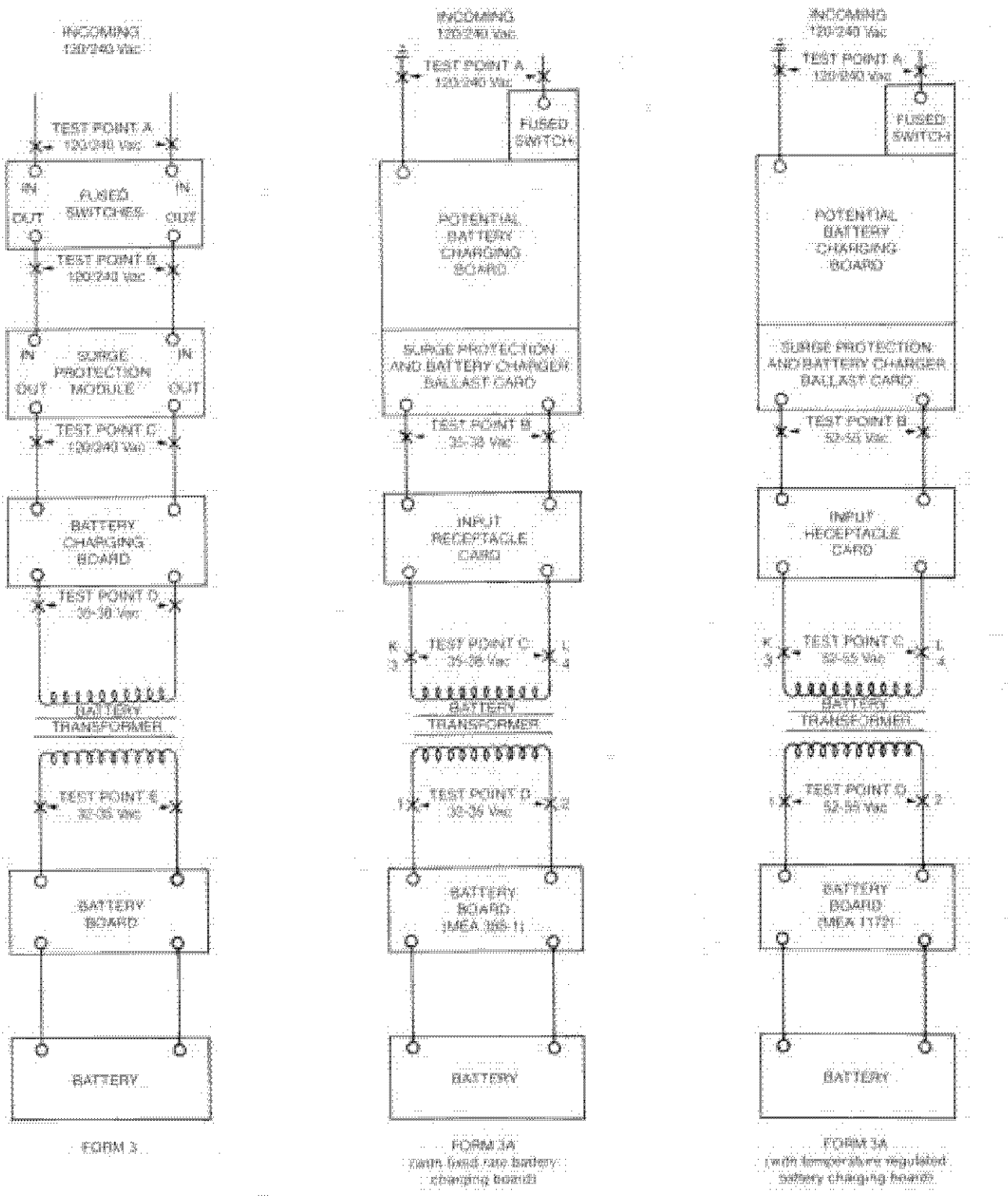

Figure 49.
Block diagram of test points for battery-charging circuitry. See Figures 50 and 51 and Tale 12 for specific testing points and values.

TABLE 12
Battery-Charging Circuitry Checks (Figures 49, 50 and 51)

Test Points	Location	Voltage Reading (Vac)			If Voltage Reading Is Not Obtained, Check:
		Form 3	Form 3A Fixed Rate Charger	Form 3A Temperature Regulated Charger	
A	Incoming - Fused switch	120/240	-	-	• Low voltage supply • Connections and wire from terminal strip • Fused switch
A	Incoming - Potential battery charging board	-	120/240	120/240	
B	Outgoing - Fused switch	120/240	-	-	• Fuses • Shorted battery • Defective ballast board • Open circuit
B1 & B2	Outgoing - Potential battery charging board	-	35-38*	52-55*	
C	Outgoing - Surge protection module	120/240			• Defective surge module • Input receptacle connections • Wiring • Open transformer
C1 & C2	Tie board terminals (L&K) and (3 & 4)	-	35-38*	52-55*	
D	Outgoing - Battery charging acessory	35-38*	-	-	• Accessory board connections • Wiring • Defective potential battery charger accessory • Open transformer
D	Tie board terminals 1 and 2	-	32-35*	34-36*	• Battery transformer connections • Wiring • Open transformer winding
E	Tie board terminals BRD and RED	32-35*	-	-	• Battery transformer connections • Wiring • Open transformer winding

* The actual voltage reading will depend on the type of voltmeter used. This voltage will be lower if the control battery is totally discharged. Repeat test with a fully charged battery.

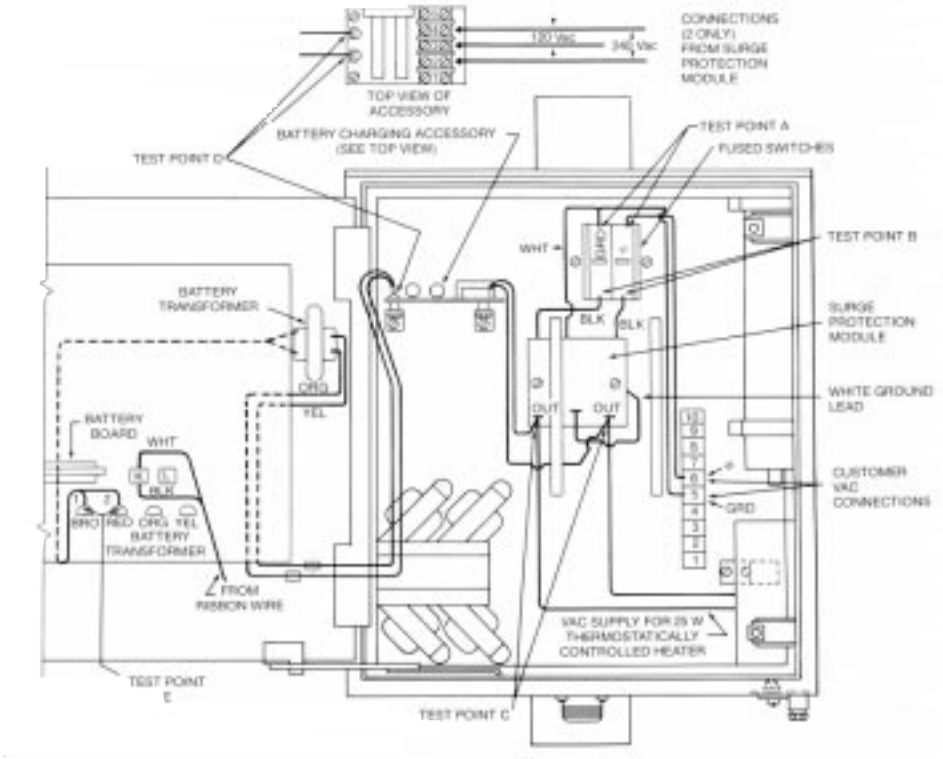

Figure 50.
Form 3 test points for battery-charging acessory circuitry (Table 12).

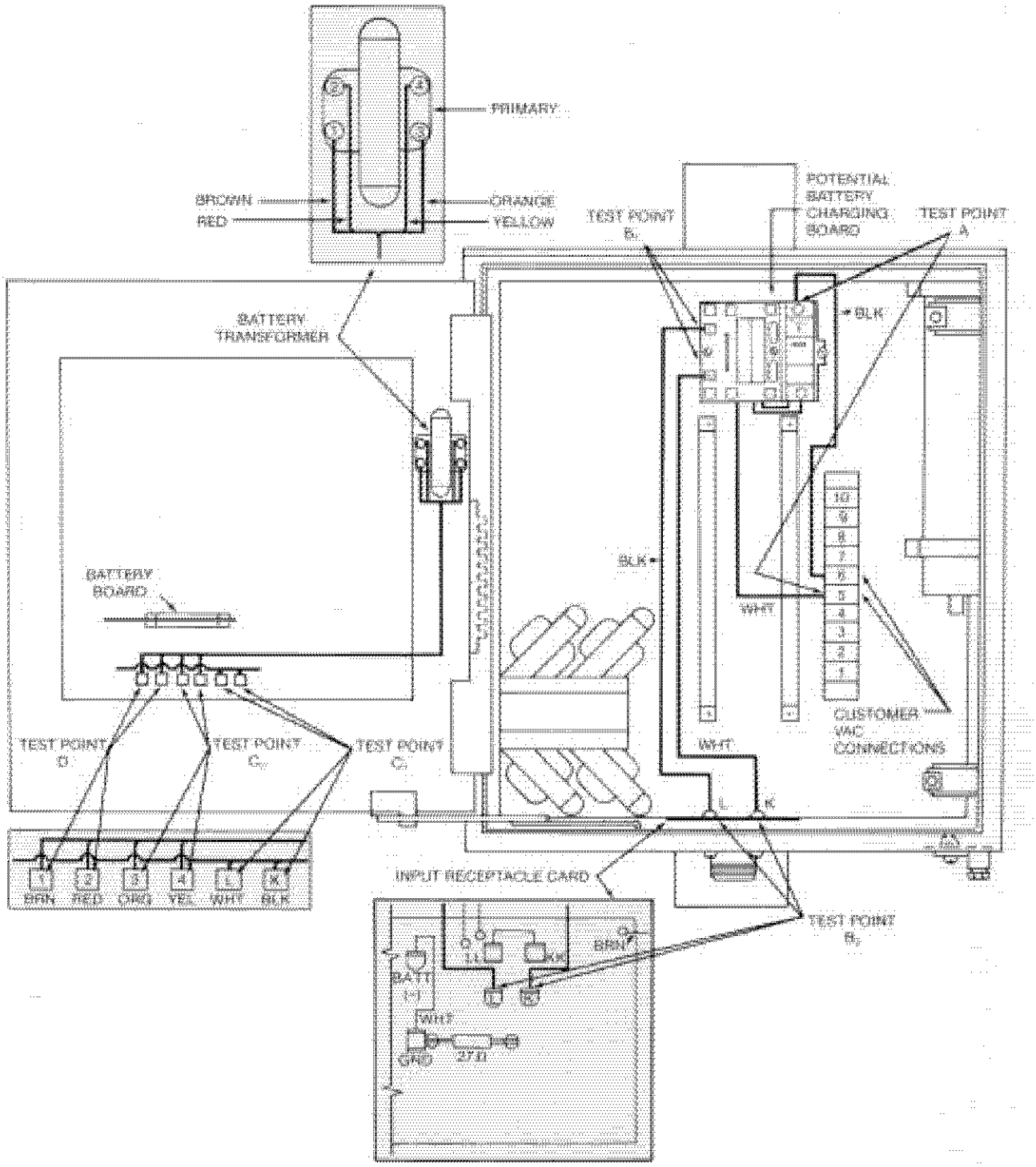

Figure 51.
Form 3A test points for battery-charging circuitry (Table 12).

MECHANICAL AND ELECTRICAL HARDWARE
All mechanical and electrical hardware components (selector switches, toggle switches, manual switch, operations counter, trip sockets, phase sockets, resistor brackets, fuse receptacle, etc.) can be visually or electrically checked. If replacement is needed, remove wires, noting their exact placement, remove all connecting hardware and then remove the existing component. Install the new component by reversing procedure. See Appendix V for connection diagrams for ME controls Form 2, 3, and 3A.

BATTERY MAINTENANCE

Battery Specifications

- Nickel-cadmium.
- 24-volts (20 cells in series).
- 1.0 Ampere hour capacity (10 hour rate).
- Charging rate: 50-mA maximum.
- Weight: 41.5 oz.
- Length: 10”.
- Width: 2”.
- Height: 2”.

Maintaining Battery Charge

The battery is fully charged and ready to use just prior to shipment. For storage at temperatures under 70-degrees, the battery will maintain adequate charge for operation up to 1-month without trickle charging. However, extremely high ambient storage temperatures can result in a battery shelf-life of as little as one month. Thus we recommend that a control battery in storage not be left off charge for a period of more than 1-month.

Two convenient methods exist for applying a trickle charge to the control battery.

1. Connect the battery to the ME control and energize the potential charger.

WARNING: High voltage. The COMMON AC GND terminal is connected to the control cabinet. If the incoming 120-Vac supply is inadvertently connected to the common terminal the control cabinet will be at 120-Vac potential. Contact with high voltage will cause severe personal injury or death.

2. A KA1142ME3 120-Vac battery charger is available for maintaining one ME control battery.

The KA1142ME3 battery charger provides two charging rates, 15-mA and 50-mA. The 15-mA charging rate is used to maintain a battery at full charge. The 50-mA rate is used to charge a discharged battery. A battery must be charged at the 50-mA rate for 48 hours.

NOTE: A fully discharged battery can be brought to full charge in about 7-days with the control’s potential charger, if the battery is good. The KA1142ME3 battery charger, at the 50-mA charge level, will recharge battery in about 48 hours.

Field Testing a Battery

NOTE: The battery in the Form 3 and 3A control has a steady drain of approximately 1.5- to 2.5-milliamperes (may be as high as 4.5-milliamperes with certain accessories).

To check the condition of a battery, a field test can easily be made. To positively insure proper control operation, this test is conservative; failure to pass does not necessarily mean the battery needs replacement. But a more thorough test can then be performed—normally in a repair or maintenance shop.

To field test:

CAUTION: Shorting the battery positive to ground will damage a resistor on the control input board, this will result in the battery negative floating, with respect to ground.

CAUTION: Do not short battery positive to the control cabinet (or other ground). If shorted on a Form 3 control the control will be permanently damaged, the control will be left inoperative and possible misoperation (unintentional operation) of the recloser may result. If shorted on a Form 3A control a resistor on the input board will be destroyed; however, the control will remain operative.

CAUTION: Shorting battery positive to battery negative at the battery test terminals will cause permanent damage to the control. The control will be inoperative and possible misoperation (unintentional operation) of the recloser may result.

1. From the battery test terminals on the control front panel measure the battery voltage (see Figure 52). If battery voltage is below 24-volts, the battery is either low on charge or is faulty. The battery should be removed for recharging and retested before returning to service.

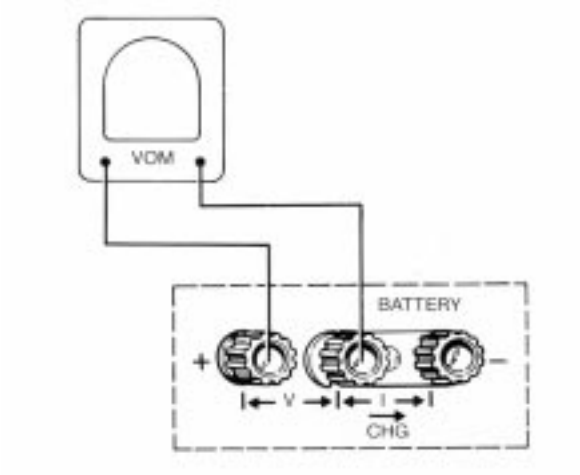

Figure 52.
Field testing a battery.

2. If battery voltage is above 24-volts, a power delivery check should be made. To load the battery, a 10-ohm resistor (minimum of 10-watt size) is required. To test the battery—while measuring battery voltage connect a 10-ohm resistor across the battery test terminals, for approximately 2-3 seconds. The battery voltage should drop by no more than 3-volts from the open circuit voltage, for ambient temperatures above 20 degrees F.

NOTE: Either a KA638ME voltmeter accessory or a KMET test set can be used for the load test. Both devices have an internal 10-ohm load resistor.

3. If the temperature is below 20-degrees F. the voltage should be approximately that shown by the lower curve in Figure 53. If the voltage is lower than this, the battery should be removed for shop testing.

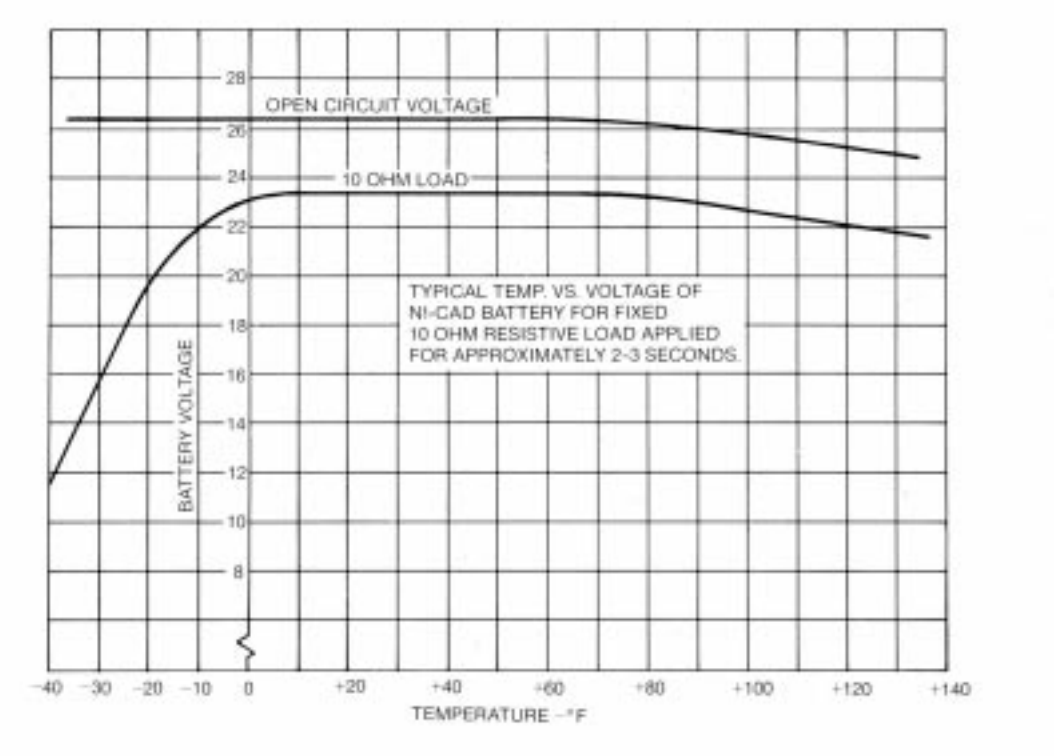

Figure 53.
Typical voltage versus temperature characteristics of nickel-cadmium battery.

Shop Testing a Battery

Before testing, the top and bottom covers of the battery should be removed. Then the following tests can be made.

1. Check for leaking cells. These are detectable by the presence of a white powdery deposit of electrolyte.
2. Measure voltage across each cell. Any cell measuring 0.0 volts is cause for immediate rejection of the entire battery.
3. If all cells have at least 0.1-volts or more, charge the battery using the KA1142ME battery charger. All cells should have et least 1.0-Vdc within 5 minutes. Any battery failing this test should be rejected.
4. Charge the battery for 48 hours with the KA1142ME battery charger.
5. Place a 10-ohm load (a KA638ME voltmeter or MET Tester has this built in) across the battery for approximately 2-3 seconds. The voltage must not drop more than 3-volts below the open circuit voltage for temperatures above 20-degrees F.
6. Make a capacity check. Discharge the battery through a 100-ohm, 12-watt resistor for 3-hours. At the end of this period and while under load, check the individual cell voltages. No cell should read less than 1.1-volts.
7. Remove the 100-ohm resistor. Recheck the open-circuit voltage on each cell after 7-days. All cells should measure very close to the same voltage level. Do not recharge the battery prior to this test.

If the battery passes the above test, it is in satisfactory condition; replace the battery covers, recharge (48-hours using the KA1142ME battery charger) and return to service.

APPENDIX I
Test Sheet

NOTE: The following sample test sheet is a convenient method to systematically test the ME electronic control and then return it to its original programming condition

TEST RECORD SHEET FOR TYPE ME ELECTRONIC CONTROL

DATE _____ CIRCUIT NO. _____

LOCATION _____

TESTER _____ CONTROL S/N _____

RECLOSER S/N _____

CONTROL PROGRAMMING AS FOUND

MINIMUM TRIP GND _____ Aϕ _____ Bϕ _____ Cϕ _____

DIAL SETTING GND: _____ LOCKOUT _____ PHASE: _____

TOGGLE SWITCH POSITION:

TCC PLUGS GND 1st _____ 2nd _____ GND SWITCH BLOCK ( )

PHASE 1st _____ 2nd _____ GND SWITCH NORMAL ( )

COUNTER READING AS FOUND _____ NORMAL RECLOSE ( )

BATTERY VOLTAGE AS FOUND _____ NON-RECLOSE ( )

RECLOSING PLUGS 1st _____ 2nd _____ 3rd _____ RESET _____

TESTS

MINIMUM TRIP GND _____ Aϕ _____ Bϕ _____ Cϕ _____

DIAL SETTING GND: FAST _____ DELAY _____ LOCKOUT _____ SHOTS

PHASE: FAST _____ DELAY _____

TIMING	% AMP	FIRST SHOT	SECOND SHOT	THIRD SHOT	FOURTH SHOT
GND	_____	_____	_____	_____	_____
PHASE A	_____	_____	_____	_____	_____
PHASE B	_____	_____	_____	_____	_____
PHASE C	_____	_____	_____	_____	_____

RECLOSING 1st _____ 2nd _____ 3rd _____ RESET _____

NON-RECLOSE TEST ( ) BATTERY DISCHARGE RATE _____

GND BLOCK TEST ( ) BATTERY CHARGE RATE _____

BATTERY VOLTAGE AS LEFT _____

COUNTER READING AS LEFT _____

APPENDIX II
Maintenance Manuals

TABLE 13
Electronic Recloser Maintenance Manuals

Service Information Number	Product Type
S280-40-4	WE
S280-40-6	VWE and VWVE
S280-40-7	RXE (S/N 517 and above) WE (S/N 6316 and above)
S280-40-8	RVE (S/N 2200 and above) WVE (S/N 1000 and above)
S280-45-3	VSML

APPENDIX III
Accessory Manuals

TABLE 14
Form 3 and 3A Type ME Electronic Control Acessory Operation, Circuitry, Testing and Field Installation Manuals

Service Information Number	Form 2,3,3A	Accessory Catalog No.	Accessory Description
S280-75-4	3, 3A	KA316ME4	Remote-Close
S280-75-5	2, 3	KA304M E	Reset-After-Reclose
S280-75-14	2, 3, 3A	KA333ME	Reclose-Blocking
S280-75-15	2, 3	KA1009, KA1010 KA1011, KA1012	Low Ground Fault Tripping
S280-75-17	2	KA418ME	Sequence Coordination
S280-75-19	2, 3, 3A	KA287ME	Surge Protection
S280-75-20	2 3	KA542ME	Thermostatically Controlled, Heater
S280-75-21	3, 3A	KA1002ME	Minimum-Trip Doubler
S280-75-22	2, 3	KA531ME	Fuse-Elimination
S280-75-23	2, 3	KA472ME	Lockout Indicating
S280-75-25	3, 3A	KA1037ME	Instantaneous Trip
S280-75-26	2, 3	KA458M E	Battery-Charging
S280-75-31	3, 3A	KA1004ME	Remote Trip
S280-75-32	2, 3	KA880ME	DC Voltage Supply
S280-75-33	3, 3A	KA1036ME	Instantaneous Lockout
S280-75-34	3	KA418ME3	Sequence Coordination
S280-75-36	3, 3A	KA333M E	Reclose-Blocking
S280-75-37	3A	KA418ME7	Sequence Coordination
S280-75-38	3, 3A	KA639ME3	Remote Lockout
S280-75-39	3A	KA542ME	Thermostatically Controlled Heater
S280-75-40	3A	KA880ME	DC Voltage Supply
S280-75-41	3, 3A	KA1137ME	Target Annunciator
S280-75-42	3, 3A	KA1163ME	Minimum Response Time
S280-75-43	3, 3A	KA1009ME, KA1010ME, KA1011 ME, KA1012ME	Low Ground Fault Tripping
S280-75-44	3, 3A	KA531ME	Fuse Elimination
S280-75-45	3A	KA1174ME	Temperature Regulated Battery Charger
S280-75-47	3A	KA1021ME	Phase and Ground Protective Accessory
S280-75-48	3A	KA1119ME, KA1122ME	Capacitor Backup Trip
S280-75-49	3, 3A	KA2003ME	Remote Close With Cold Load Pickup
S280-75-50	3, 3A	KA545ME3	Load Current Indicator
S280-75-51	3, 3A	KA2039ME	Recloser Status
S280-75-52	3, 3A	KA2035ME2	Remote Non-Reclose and Remote Ground Trip Block, Maintained Contact
S280-75-53	3 3A	KA2071 ME1	Remote Non-Reclose and, Remote Ground Trip Block, Pulsed Contact
S280-75-55	3, 3A	KA2070ME	Remote Close With Cold Load Pick Up, Remote Lockout and Recloser Status
S280-75-56	3 3A	KA2072ME	Remote Battery Test and, Battery Voltage Monitor Analog output
S280-75-57	3, 3A	KA2047ME	Remote Battery Test and Voltage Monitor
S280-75-61	2, 3, 3A	KA1142ME3	Portable Dual Rate Battery Charger

APPENDIX IV
ME Contol Parts

NOTE: For reference to Control parts and components, refer to Figures 2, 7, 55, 56 and 57. For current prices, see the latest edition of the Parts Price List.

TABLE 15
Type ME Control Plug-In Panel Components Form 2 (Above S/N 1900), Form 3 (Above S/N 4000), Form 3A (Above S/N 26000)

Catalog No.	Description
KA216ME1S	Ground Trip Timing Plug Curve 1
KA216ME2S	Ground Trip Timing Plug Curve 2
KA216ME3S	Ground Trip Timing Plug Curve 3
KA216ME4S	Ground Trip Timing Plug Curve 4
KA216MESS	Ground Trip Timing Plug Curve 5
KA216ME6S	Ground Trip Timing Plug Curve 6
KA216ME7S	Ground Trip Timing Plug Curve 7
KA216ME8S	Ground Trip Timing Plug Curve 8
KA216ME9S	Ground Trip Timing Plug Curve 9
KA216M E11S	Ground Trip Timing Plug Curve 11
KA216ME13S	Ground Trip Timing Plug Curve 13
KA216ME14S	Ground Trip Timing Plug Curve 14
KA216ME15S	Ground Trip Timing Plug Curve 1S
KA216ME16S	Ground Trip Timing Plug Curve 16
KA216ME17S	Ground Trip Timing Plug Curve 17
KA216ME18S	Ground Trip Timing Plug Curve 18
KA216MEKS	Ground Trip Timing Plug Curve K
KA217MEAS	Phase Trip Timing Plug Curve A
KA217MEBS	Phase Trip Timing Plug Curve B
KA217MECS	Phase Trip Timing Plug Curve C
KA217MEDS	Phase Trip Timing Plug Curve D
KA217MEES	Phase Trip Timing Plug Curve E
KA217MEFS	Phase Trip Timing Plug Curve F
KA217MEGS	Phase Trip Timing Plug Curve G
KA217MEHS	Phase Trip Timing Plug Curve H
KA217MEJS	Phase Trip Timing Plug Curve J
KA217MEKS	Phase Trip Timing Plug Curve K
KA217MELS	Phase Trip Timing Plug Curve L
KA217MEMS	Phase Trip Timing Plug Curve M
KA217MENS	Phase Trip Timing Plug Curve N
KA217MEPS	Phase Trip Timing Plug Curve P
KA217MERS	Phase Trip Timing Plug Curve R
KA217METS	Phase Trip Timing Plug Curve T
KA217MEVS	Phase Trip Timing Plug Curve V
KA217MEWS	Phase Trip Timing Plug Curve W
KA217MEXS	Phase Trip Timing Plug Curve X
KA217MEZS	Phase Trip Timing Plug Curve Z
KA243MEXXXS	Phase Min Trip Resistor 100,120,140,170, 200, 240, 280, 300, 340, 400, 480, 560, 600, 680, 800, 960, or 1120 Amp Yellow Label for all Reclosers Except ME and VSMT. Change XXX in Catalog No. to Amps. Ex: KA243ME280S
KA244ME10SS	Low Ground Min Trip Resistor 10 Amp Yellow Label for all Reclosers Except ME and VSMT
KA244MEXXXS	Ground Min Trip Resistor 25, 35, 50, 70,100, 120,140,170, 200, 240, 280, 340, 400, 480, or 560 Amp Yellow Label for all Reclosers Except ME and VSMT. Change XXX in Catalog No. to Amps. Ex: KA244ME140S
KA244ME5.8S	Low Ground Min Trip Resistor 5.8 Amp Yellow Label for all Reclosers Except ME and VSMT
KA275MEXXS	Reclosing Delay Single Value, INST. or 60 Sec. Change XX in Catalog No. to INST. Ex: KA275MEINST
KKA301MEXXXS	Phase Min Trip Resistor 200, 240, 280, 340, 400, 480, 560, 600, 680, 800, 960,1120 1200,1360 1600 1920 or 2240 Amp Blue Label for ME and VSMT Reclosers only. Change XXX in Catalog No. to Amps. Ex: KA301ME800S
KA302MEXXXS	Ground Min Trip Resistor 100,140, 200, 240, 280, 340, 400, 480, 560, 680, 800, 960, or 1120 Amp Blue Label for ME and VSMT Reclosers only. Change XXX in Catalog No. to Amps. Ex: KA3O2MES60S
KA101SMES	Reset Delay Multiple Value Plug Including Settings for 1015, 30, 45, 60, 90,120 and 180 Seconds
KA1016MES	Reclosing Delay Multiple Value Plug Including Settings for 1,2,5,7,10,15,30 and 45 Seconds

TABLE 16
Type ME Control Circuit Boards and Control Cables
Form 2 (Above S/N 1900), Form 3 (Above S/N 4000, Form 3A (Above S/N 26000)

Catalog No.	Description
KA1ME7	Control Cable, 7 Ft. All Reclosers
KA1MEXX	Longer Control Cable: 8 Thru 80 Ft. for RVE RXE VWE, VWVE, WE, WVE Reclosers. 8 Thru 19 Ft. for CXE, ME, VSA, VSAT, VSML, VSMT Reclosers. Replace XX With Length.
KA18ME20	Control Cable, 20 Ft. for CXE, ME, VSA, VSAT, VSML, VSMT Reclosers
KA18MEXX	Extra Long Control Cable: 81 Thru 125 Ft. for RVE, RXE, VWE, VWVE, WE, WVE Reclosers. 20 Thru 35 Ft. for CXE, ME, VSA, VSAT, VSML, VSMT Reclosers. Replace XX With Length.
KA251 ME	Phase Trip No. 1 Circuit Board for Form 2
KA252ME	Phase Trip No. 2 Circuit Board for Form 2
KA253ME	Ground Trip No. 1 Circuit Board for Form 2
KA254ME	Ground Trip No. 2 Circuit Board for Form 2
KA255ME	Output Circuit Board
KA256ME	Diode Circuit Board for Form 2
KA257ME	Battery Charging Circuit Board for Form 2
KA267ME	Reclose and Reset Circuit Board for Form 2

Catalog No.	Description
KA381MES	Reclose and Reset Circuit Board for Form 3 and 3A
KA382MES	Diode Circuit Board for Form 3 and 3A
KA383MES	Output Circuit Board for Form 3 and 3A
KA384MES	Ground Trip No. 2 Circuit Board for Form 3 and 3A
KA385MES	Ground Trip No. 1 Circuit Board for Form 3 and 3A
KA386MES	Phase Trip No. 2 Circuit Board for Form 3 and 3A
KA387MES	Phase Trip No. 1 Circuit Board for Form 3 and 3A
KA388ME1S	Battery Charging Circuit Board for Standard Charger on Form 3 and 3A Below 53381
KA388ME2S	Battery Charging Circuit Board for Dual Rate Charger on Form 3 Above 5500 and Form 3A
KA1103ME	Tie Board for Form 3A
KA1109ME8	120-Vac Ballast and Surge Card for Fixed or Temperature Regulated Battery Charger
KA1L00ME9	240-Vac Ballast and Surge Card for Fixed or Temperature Regulated Battery Charger
KA1172ME	Temperature Regulated Battery Charging Board for Form 3A

TABLE 17
Type ME Control Replacement Parts and Accessories
Form 2 (Above S/N 1900), Form 3 (Above S/N 4000), Form 3A (Above S/N 26000)

Catalog No.	Description
KA107LS1	Relay Assembly
KA107LS2	Relay Assembly
KA234ME1	Ground Matching Transformer (1 Per Control)
KA250ME	Tie Board for Form 2
KA279ME	Phase Matching Transformer (3 Per Control) Form 2 and 3
KA287ME5S	24-Vdc Supply Adapter Accessory for Form 3, from 5501 Thru 25999
KA287ME6S	24-Vdc Supply Adapter Accessory for Form 3A Above 26000
KA290ME1	Selector Switch and Wire Pistol Grip Form 2 and 3
KA293ME2	Load Current Indicator Accessory Form 3, Above 5500
KA304ME1	Reset After Successful Reclose Accessory for Form 2, Below 1900
KA304ME4	Reset After Successful Reclose Accessory for All Form 3 Controls
KA316ME2S	Remote Closing Accessory for Form 2, 1900 and Above
KA316ME4S	Remote Closing Accessory for Form 3, Above 5500
KA325ME2	Adapter Accessory for Form 3 Control to Form 1 Recloser
KA333ME7	Blocking of Reclosing Accy. When Deenergized for 120-Vac for Form 3 Above 5500 to 26000
KA333ME8	Blocking of Reclosing Accessory When Energized for 12O-Vac for Form 3, Above 5500 to 26000
KA333ME9	Blocking of Reclosing Accessory When Deenergized for 240-Vac for Form 3, Above 5500 to 26000
KA333ME10	Blocking of Reclosing Accessory When Energized for 240-Vac for Form 3, Above 5500 to 26000
KA333ME11	Block of Reclosing Accy.—120-Vac While Deenergized, for F3A 26000 and Above
KA333ME12	Block of Reclosing Accy.—120-Vac While Energized, for F3A 26000 and Above
KA406ME	Input Plug and Wire Harness for Form 2
KA410ME	Tie Board for Form 3
KA418ME3	Sequence Coordination Accessory for Form 3, Below 5500
KA418ME7S	Sequence Coordination Accessory—for Form 3 5501-25999 and Form 3A, Above 26000
KA423MES	Circuit Board—for Remote Closing Accessory
KA450ME2S	Battery—24V, for Form 3 and 3A
KA452ME	Control Counter Assembly Form 1 2, 3 and 3A
KA458ME3	Battery Charging Accessory 115-Vac for Form 3, from 5501 Thru 25999
KA458ME4	Battery Charging Accessory 230-Vac for Form 3 from 5501 Thru 25999

Catalog No.	Description
KA472ME3S	Lockout Indicating Contact Accy.—for Form 3 Above 5500 and Form 3A
KA514ME1	Phase Trip Protection Accessory—1 Required Per Control for Form 2, 1615 and Above; for Form 3 Below 4100; Obsolete
KA531ME3S	Fuse Elimination Accessory for Form 2, 1900 and Above, Form 3 and Form 3A
KA544ME1S	Heater Element Oniy 120-Vac 100-85F
KA544ME2S	Heater Element Only 240-Vac 100-85F
KA544ME3S	Heater Element only 120-Vac 60-15F
KA544ME4S	Heater Element Only 240-Vac 60-15F
KA578MES	Potential Battery Charger—for Form 3 only
KA609ME1	Target Accessory—With Indicating Buttons, Phase Trip only for Double Size Cabinet, for Form 3 Below 5500; obsolete
KA614ME1	Control Cable Locking Sleeve
KA638ME1S	Battery Test Voltmeter Portable Type
KA639ME3S	Remote Lockout Accessory for Form 3 Above 5500 and Form 3A
KA641 ME500	Single Cabinet
KA642ME500	Double Cabinet
KA682ME1	Standard Input Plug Board and Harness Form 3
KA684ME	Battery Connector
KA689ME920	Ground Trip Sequence Selector Switch Form 2 and 3
KA703ME	Battery (Gould) for Form 1—Obsolete
KA710ME2	Battery Adapter Kit for Connection of Form 2 Battery to Form 3 Control, Male Receptacle
KA710ME3	Battery Adapter Kit for Connection of Form 3 Battery to Form 2 Control, Female Receptacle
KA712ME3	24-Vdc Supply Adapter Accy. for Field Installation for Form 3, Below 5500
KA712ME4	24-Vdc Supply Adapter Accessory for Field Installation for Form 3, 5500 and Above
KA713ME1	Field Kit for Thermostatic Heater With Surge Protection 115-Vac, for 1900 to 12250
KA713ME2	Field Kit for Thermostatic Heater with Surge Protection 23O-Vac, for 1900 to 12250
KA713ME3	Field Kit for Thermostatic Heater with Surge Protection and Fuse Disconnect 115-Vac, from S/N 12250 to 26000
KA713ME4	Field Kit for Thermostatic Heater With Surge Protection and Fuse Disconnect 230-Vac, from S/N 12250 to 26000
KA713ME5	Field Kit for Thermostatic Heater 120-Vac, 85/100 Degree F. Above 26000
KA713ME6	Field Kit for Thermostatic Heater 120-Vac, 15/60 Degree F; Above 26000
KA713ME7	Field Kit for Thermostatic Heater 240-Vac, 85/100 Degree F; Above 26000
KA713ME8	Field Kit for Thermostatic Heater 240-Vac,

TABLE 17
Type ME Control Replacement Parts Acessories
Form 2 (Above S/N 1900), Form 3 (Above S/N 4000), Form 3A (Above S/N 26000) (continued)

Catalog No.	Description
KA716ME	Reclosing Fuse Replacement Kit
KA719ME	120-Vac Surge Protection Field Kit
KA720ME	240-Vac Surge Protection Field Kit
KA721ME	Battery Post Installation Kit, 4000 and Above
KA734ME1	48-Vdc Supply Adapter (AEP only 15 Amp)
KA734ME2	125-Vdc Supply Adapter (AEP only 5 Amp)
KA734ME3	125-Vdc Supply Adapter (AEP only 5 Amp)
KA734ME4	48-Vdc Supply Adapter (15 Amp) from 5501 Thru 25999
KA734ME5	125-Vdc Supply Adapter (15 Amp) from 5501 Thru 25999
KA734ME6	125-Vdc Supply Adapter (15 Amp) from 5501 Thru 25999
KA734ME10	48-Vdc Supply Adapter (15 Amp) 26000 and Above
KA734ME11	125-Vdc Supply Adapter (5 Amp) 26000 and Above
KA734ME12	125-Vdc Supply Adapter (15 Amp) 26000 and Above
KA734ME13	48-Vdc Field Kit for DC Supply—15A 240-Vac F3A
KA734ME14	125-Vdc Field Kit for DC Supply—5A 240-Vac F3A
KA734ME15	125-Vdc Field Kit for DC Supply—15A 240-Vac F3A
KA735ME	Battery Bracket Mounting Kit for GE Batteries in Controls Below 15000
KA736ME	Conversion Kit to Cold Load Pickup from Form 3 to Form 3A
KA741 ME4	Retrofit Kit for Replacing Demand Meters—With Instantaneous Indicating Elements Below 35909
KA741 ME5	Retrofit Kit for Replacing Demand Meters—Without Instantaneous Indicating Elements, Below 35909
KA746ME	Battery—24V, for Form 2
KA835ME901	Phase Trip Sequence Selector Switch
KA835ME902	Phase Trip Sequence Selector Switch—for Use With Sequence Coodination Accessory
KA852ME2S	Standard Heater—240V
KA871ME2	Battery Charging Isolation Transformer
KA1000ME1S	Minimum Trip Doubler—Local Operation—Phase only
KA1000ME2S	Minimum Trip Doubler—Local Operation—Phase and Ground
KA1002ME4S	Minimum Trip Doubler—Remotely operated
KA1002ME5S	Minimum Trip Doubler—Three Wire Control to Double Return
KA1004MES	Remote Trip Accessory Kit
KA1021 ME4	Protective Accessory Field Kit for Ground Trip—4000 to 50071, Supersedes KA921 ME4
KA1021 ME5	Protective Accessory Field Kit for Phase Trip—4000 to 50071, Supersedes KA921 ME5
KA1021 ME6	Protective Accessory Field Kit for Phase and Ground Trip—4000 to 50071, Supersedes KA921 ME6
KA1030ME2S	Fault Indicator—Counter Type Phase and Ground, Above 14450
KA1036ME1S	Instantaneous Lockout—Phase only, Multiple of 1.4, 2.0, 2.8, 4.0, or 5.6
KA1036ME2S	Instantaneous Lockout—Phase Only, Multiple of 5.6, 8.0 11.2 16.0 or 22.4
KA1036ME5S	Instantaneous Lockout—Phase and Ground, Both With Multiples of 1.4, 2.0, 2.8, 4.0, or 5.6
KA1036ME6S	Instantaneous Lockout—Phase and Ground, Phase Multiple of 1.4, 2.0, 2.8, 4.0 or 5.6; Ground Multiple of 5.6, 8.0, 11.2, 16.0, or 22.4
KA1036ME7S	Instantaneous Lockout—Phase and Ground Phase Multiple of 5.6, 8.0, 11.2 1 6.0 or 22.4 Ground Multiple of 1.4, 2 0, 2.8, 4.0 or 5.6
KA1036ME8S	Instantaneous Lockout—Phase and Ground, Both With Multiples of 5.6, 8.0, 11.2, 16.0, or 22.4
KA1037ME1S	Instantaneous Trip—Phase only, Multiples of 1.4, 2.0, 2.8, 4.0 or 5.6
KA1037ME2S	Instantaneous Trip—Phase only, Multiples of 5.6, 8.0, 11.2 16.0, or 22.4
KA1037ME5S	Instantaneous Tr;p—Phase and Ground, Both With Multiples of 1.4, 2.0, 2.8, 4.0 or 5.6
KA1037ME6S	Instantaneous Trip—Phase and Ground. Phase Multiple of 1.4, 2.0, 2.8, 4.0 or 5.6; Ground Multiple of S.6, 8.0, 11.2, 16.0, or 22.4
KA1037ME7S	Instantaneous Trip—Phase and Ground, Phase Multiple of 5.6, 8.0, 11.2, 16.0, or 22.4: Ground Multiple of 1.4, 2.0, 2.8, 4.0, or 5.6
KA1037ME8S	Instantaneous Trip—Phase and Ground, Both With Multiples of 5.6, 8.0, 11.2, 16.0, or 22.4
KA1102ME1	Standard Input Plug Board and Harness for Form 3A
KA1103ME	Tie Board, Form 3A
KA1109ME8	Standard Charger Board—120-Vac, F3A Only
KA1109ME9	Standard Charger Board—240-Vac, F3A Only
KA1134ME1S	Automatic Resetting Fault Indicator Circuit Board
KA1137ME1S	Annunciator—Type Target Accessory—Auto Reset, Phase only; Above 14450
KA1137ME2S	Annunciator—Type Target Accessory—Auto Reset, Phase and Ground; Above 14450
KA1141ME1	Selector Switch and Wire Pistol Grip, Form 3A only
KA1142ME3	Shelf Battery Charger, Portable
KA1159ME	Ground Trip Sequence Selector Switch—Form 3A only
KA1160ME	Operations to Lockout Sequence Switch—Al1 Controls
KA1163MES	Minimum Response Time
KA1174ME1S	Temperature Regulated Battery Charger Accy.—120-Vac, for F3A 26000 and Above
KA1174ME2S	Temperature Regulated Battery Charger Accy.—240-Vac, for F3A 26000 and Above
KA1174ME3S	Field Kit for Temperature Regulated Battery Charger—for F3 from 4001 Thru 25999
KA1193ME	Harness only for Standard Input Plug Board for F3A
KA1194ME1	Standard Input Plug Board only for Form 3A
KA2003MES	Remote Close With Cold-Load Pickup
KA2035ME2S	Remote Non-Reclose and Ground Trip Block—Maintained Contact, 24V
KA2039ME1S	Recloser Status—Without Indicator Lamps
KA2039ME2S	Recloser Status—With Indicator Lamps
KA2047MES	Battery Monitor—over 30-Vdc/Under 22-Vdc Indication
KA2070ME1S	Remote Close With Cold Load Pickup Remote Lockout and Status—Without Indicator Lamps
KA2070ME2S	Remote Close With Cold Load Pickup Remote Lockout and Status—With Indicator Lamps
KA2071ME1S	Remote Non-Reclose and Ground Trip Block—Pulse Contact, 24V
KA2072MES	Battery Monitor—Analog
KA2189MES	Remote Indication of Fault Target Accessory
KP457ME	Mounting Strip (Conducting)
KP483ME1	Trip Resistor Clamps
KP509ME	Mounting Strip Insulating
KP674ME1	Sequence Relay—for Form 3 and 3A
KP884ME	Circuit Board Shield
KP894ME1	Battery Mounting Bracket, Form 3 and 3A
KP953ME	Panel Locking Spring
KP1077ME1S	Cover
KP1100ME	Fuse Block Single Section
KP1110ME	Fuse Block End Closure Unit
KP1139ME1	Flip Disc Target—Complete
KP2069A4	Knob for Number of operations Selector Switches (Ground, Phase or Lockout)
KP2069A8	Manual Control Switch Handle
KP2075A2	2 Amp Fuse—Type AGC, Glass Tube; Min. Qty. 5
KP2075A4	3/4 Amp Fuse, Type AGX
KP2075A13	15 Amp Fuse—Type BAN, Fibre Tube; Min. Qty. 5
KP2075A18	3/8 Amp Fuse, Slow Blow Type MDQ, Min. Qty. 5
KP2075A19	6 Amp Fuse, Type BAN
KP2080A1S	Plastic Battery Connector—Male, Battery Connechon
KP2080A2S	Plastic Battery Connector—Female, Control Connection
KP4060A12	120 Volt Relay, 2 to 60 Sec.
KP4060A22	28 Volt Relay, 2 to 60 Sec.
KP4061A3	28 Volt Relay, 0.15 to 1.0 Sec.
K721525105018A	Screw—for Trip Resistors Clamps
K999904310283A	Bulb—24V, for Lockout Indicator

Reclosers
Type ME Electronic Control
Installation of Thermostatically Controlled Heater

PURPOSE

Thermostatically controlled cabinet heaters should be used when ME controls are to operate in extreme ambient temperatures (-25F or below; +100F and above) or regions of high humidity. Heaters are 25 watts, and require a 115- or 230-volt a-c supply.

The thermostat energizes the heater when the temperature in the lower-right corner of the control cabinet falls to 85F or below. It de-energizes the heater when the temperature rises to 100F or above. With these temperature limits, the heater will provide thermal protection at low temperatures, humidity control through the middle temperature range, yet it does not add to cabinet temperature under high ambient conditions.

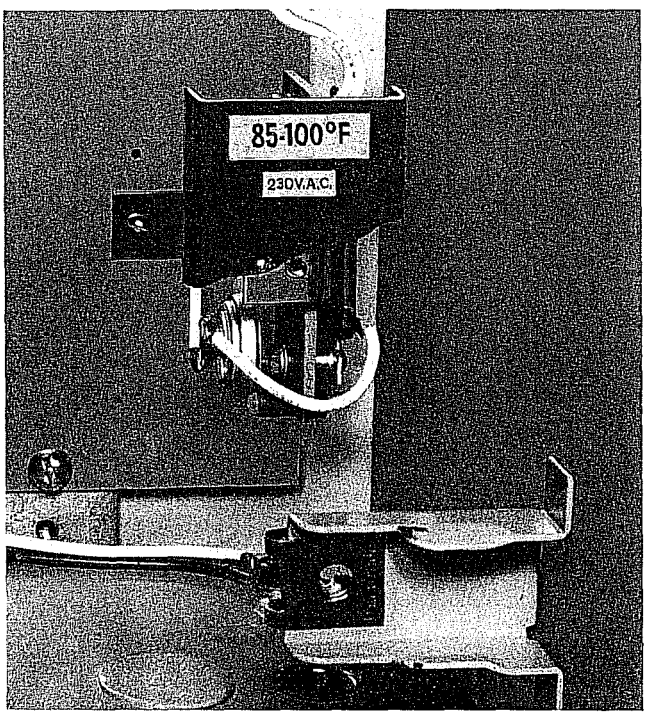

Figure 1

Thermostatically controlled heater accessory installed in a Form 3 control (serial 5500 or higher). Cover cut away to show construction.

FACTORY INSTALLED

Factory-installed heater accessories (KA542ME5 for 115 vac; KA542ME6 for 230 vac) provided in controls having serial numbers above 12250 are connected as shown in Figure 2.

This accessory can be placed in service by connecting the proper low-voltage supply to the terminal strip in the control, as shown in Figure 2.

FIELD INSTALLATION

Thermostatically controlled heaters can be field installed in existing controls. Field installation heater kits are:

KA713ME1, 115 vac KA713ME2, 230 vac	For Form 2 controls serialed 1900 and above through Form 3 controls serialed below 12250.
KA713ME3, 115 vac KA713ME4, 230 vac	For Form 3 controls serialed above 12250.

INSTALLATION PROCEDURE (ALL CONTROLS)

1. Bypass and trip the recloser, if it is in service, by moving the manual control switch on control panel to TRIP. With the control tripped it will be in BATTERY-OFF position.

2. Disconnect the control cable.

3. De-energize the low-voltage power (115- or 230-volt ac) if supplied to the control.

4. Release – and swing out – the hinged control panel to gain access to the inside of the control cabinet.

5. Disconnect the control battery. On Form 3 controls a battery-lead plug and receptacle is provided. On Form 2 controls, disconnect the red (positive) and black (negative) battery leads from terminals on the control circuit tie board. Keep uninsulated battery leads from touching each other.

6. Remove the 15-watt continuously energized heater (standard equipment on some controls) if present.

Controls With Serial Numbers 12250 and Above Complete the installation procedure by following Steps 7 through 17.
Controls With Serial Numbers Below 12250 Skip Steps 7 through 17. Follow Steps 18 through 26 to complete the installation.

FOR CONTROLS SERIALED 12250 AND ABOVE

7. Kit includes a heater assembly with thermostat and mounting bracket, the surge-protection module, fused-switch components, mounting hardware, jumper wires, terminals, and labels.

8. Prior to heater installation, enclose the bottom portion of the battery with the insulating heat shield. Slip it under and bend it over the lower battery strap.

9. Install the thermostatically controlled heater assembly using two #6-32 x 5/16 self-tapping screws. Holes are provided in the control accessory panel at the location shown in Figure 2.

These instructions do not claim to cover all details or variations in the equipment, procedure, or process described, nor to provide directions for meeting every possible contingency during installation, operation, or maintenance. When additional information is desired to satisfy a problem not covered sufficiently for the user's purpose, please contact your McGraw-Edison Power Systems Division sales engineer.

McGRAW-EDISON COMPANY
Power Systems Division
Canonsburg, Pennsylvania 15317

March 1974
Supersedes 10/72

SP

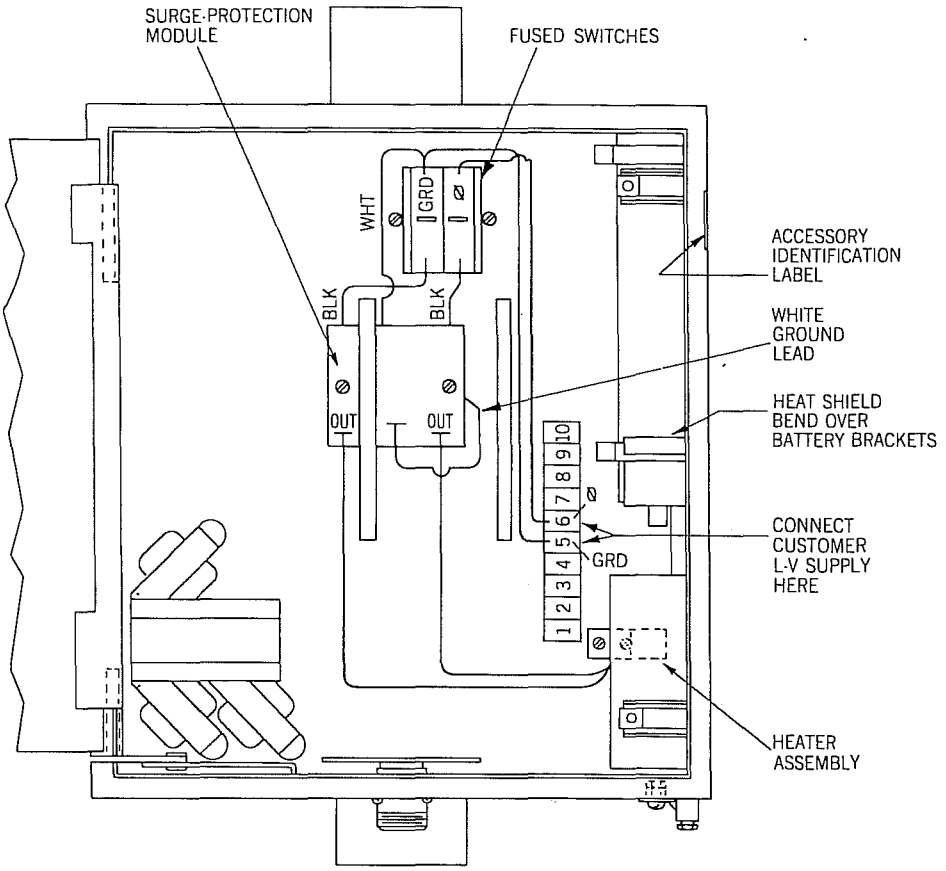

Figure 2
Heater accessory with surge-protection module and fused switches in Form 3 controls with serial numbers 12250 and above.

10. Install fused switch sections and end plates using the two #8-32 x 3/8 rd. hd. screws and lockwashers. Holes are provided in the accessory panel at the location shown in Figure 2.

11. Install the surge-protection module using the two #8-32 screws, nylon spacers, and white ground lead, according to the procedure specified in bulletin S280-75-30. Holes are provided in the accessory panel at the location shown in Figure 2.

12. Connect heater to surge-protection module as follows: Solder or crimp push-on terminals to heater leads; connect heater leads to OUT terminals on surge-protection module.

NOTE: Thermostatically controlled heaters installed in the upper half of a double-size control cabinet, should also be connected to the OUT terminals on the surge module.

13. Connect module leads to terminals of fused switch, as shown in Figure 2, observing the polarity specified in bulletin S280-75-30. *Be certain that module ground jumpers are properly connected.*

14. Connect leads from upper terminals of fused switch to 5 and 6 on the 10-position terminal strip. Observe polarity shown in Figure 2.

15. Mount labels.

A. Accessory identification label should be applied to the right-inside wall of the control cabinet.

B. Voltage marking label should be adjacent to terminals 5 and 6.

16. Connect low-voltage supply to 5 and 6 on the terminal strip observing polarity specified in bulletin S280-75-30. It is *very important* to have the grounded side of the low-voltage supply connected to the proper terminal.

17. Confirm that all connections are correct. Then reconnect battery leads and control cable, re-energize the low-voltage supply, and return recloser to service.

FOR CONTROLS SERIALED BETWEEN 1900 AND 12250

18. Kit includes a heater assembly with thermostat and mounting bracket, the surge protection module, mounting hardware, jumper wire, terminals, and labels.

19. Prior to heater installation, enclose the bottom portion of the battery with the insulating heat shield. Slip it under and bend it over the lower battery strap.

20. Install the thermostatically controlled heater as follows:

A. *In controls with serial numbers between 5500 and 12250.* Mount heater assembly in lower-right corner of cabinet with two #6-32 x 5/16 self-tapping screws, as shown in Figure 3. Holes are provided in the accessory panel.

B. *In controls with serial numbers between 1900 and 5500.* Drill two 0.120-inch-diameter holes (No. 31

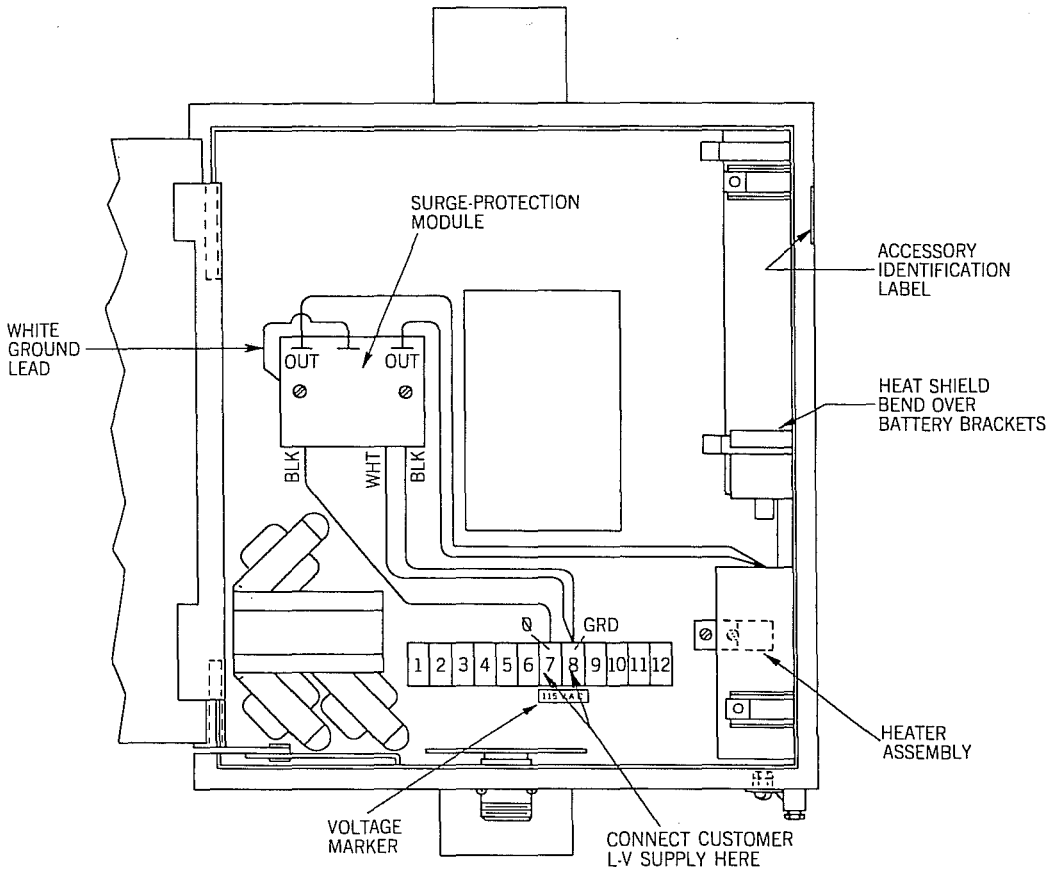

Figure 3

Heater accessory with surge-protection module in Form 3 controls with serial numbers between 5500 and 12250.

drill) as shown in Figure 4. Drill only through channel; DO NOT DRILL THROUGH BACK OF CABINET.

Mount heater assembly using the two #6-32 x 5/16 self-tapping screws.

21. Install the surge-protection module using the two #6-32 x 5/8 self-tapping screws, nylon spacers, and white ground lead, according to the procedure specified in bulletin S280-75-30.

22. Connect module leads to the control terminal strip, observing the polarity specified in bulletin S280-75-30. Terminal numbers shown in Figures 3 and 4 are typical. The actual terminals to which module leads should be connected are those which do (or will) receive the low-voltage supply. Be sure connections are proper with respect to the grounded side of the low-voltage supply.

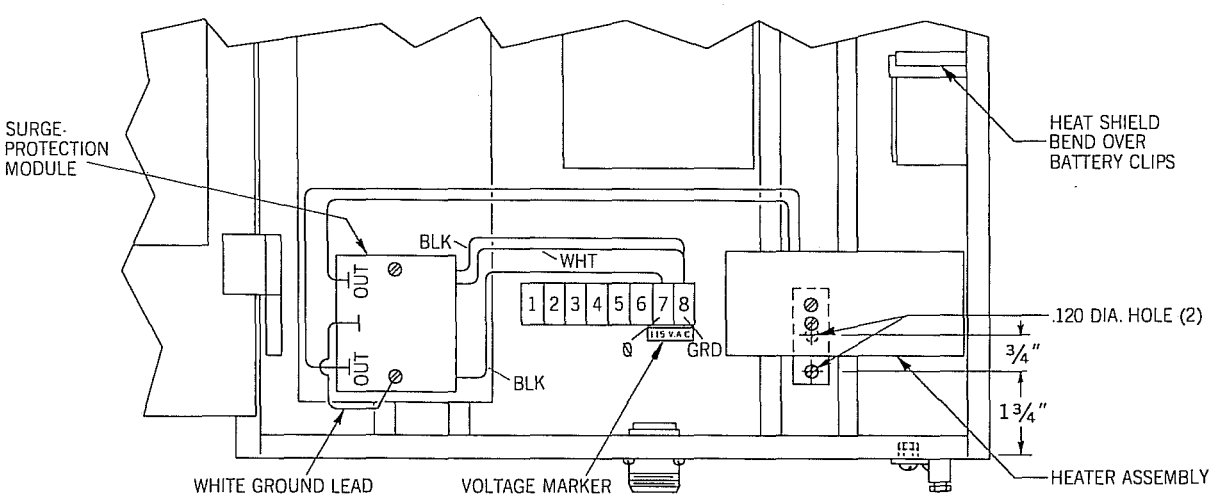

Figure 4

Heater accessory with surge-protection module in Form 2 controls above serial number 1900 and Form 3 controls with serial numbers from 4000 to 5499.

NOTE: There will be no terminal block on controls having a serial number below 4000. On these units, connect module leads directly to low-voltage supply as shown in Figure 3D of bulletin S280-75-30.

Also, *be certain that module ground jumpers are properly connected*, as specified in S280-75-30.

23. Solder (or crimp, if tool available) push-on wire terminals to the heater accessory leads and connect the leads to terminals marked OUT on the surge-protection module.

24. Mount labels.

A. Accessory identification label should be applied to the right, inside wall of the control cabinet.

B. Voltage marking label should be applied below the terminal strip, at terminals to which module leads have been connected.

25. Connect low-voltage supply leads to the terminal strip observing polarity specified in bulletin S280-75-30. It is *very important* to have the grounded side of the low-voltage supply connected to the proper surge-protection module leads.

26. Confirm that all connections are correct. Then reconnect battery leads and control cable, re-energize the low-voltage supply, and return recloser to service.

ACCESSORY SCHEMATIC

Schematic diagram of the thermostatically controlled heater accessory is shown in Figure 5.

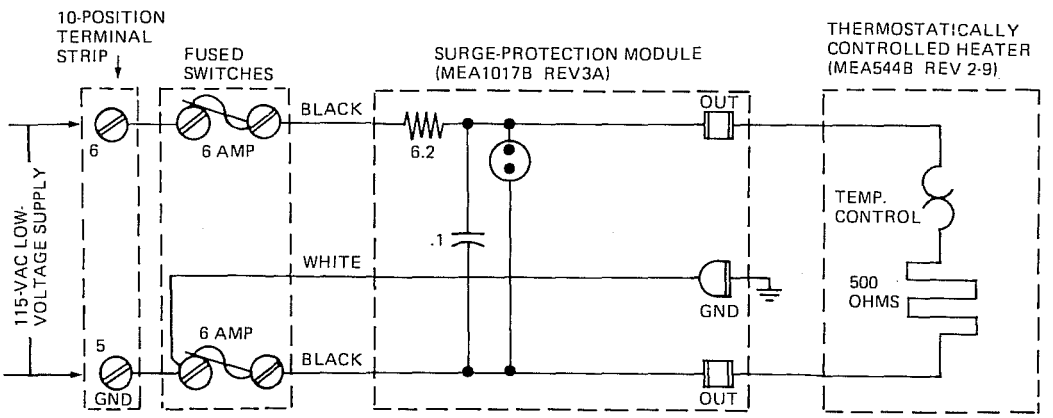

Figure 5A—115-VOLT

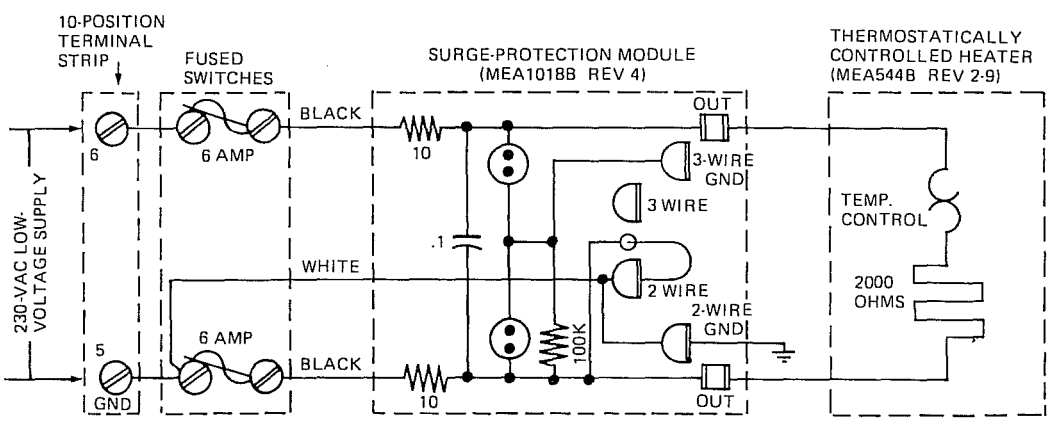

Figure 5B—230-VOLT

Figure 5
Schematic diagram of thermostatically controlled 25-watt heater accessory.

DISABLING PROCEDURE

The heater accessory can be disabled by either of two methods:

1. Deenergizing the low-voltage supply by pulling the fused switches.

CAUTION

If this method is used, all other control features that may use the same low-voltage supply (battery-charging accessory, reclose-blocking accessory, contact-position-indicating-lights accessory) will also be deenergized.

2. Disconnecting accessory leads from the OUT terminals on the surge protection module.

WARNING

Electrical hazard! Be sure to deenergize the low-voltage supply at the fused switches before disconnecting accessory leads. Reenergize afterward.

Reclosers

Type ME Electronic Control
Installation of KA458ME Battery-Charging Accessory

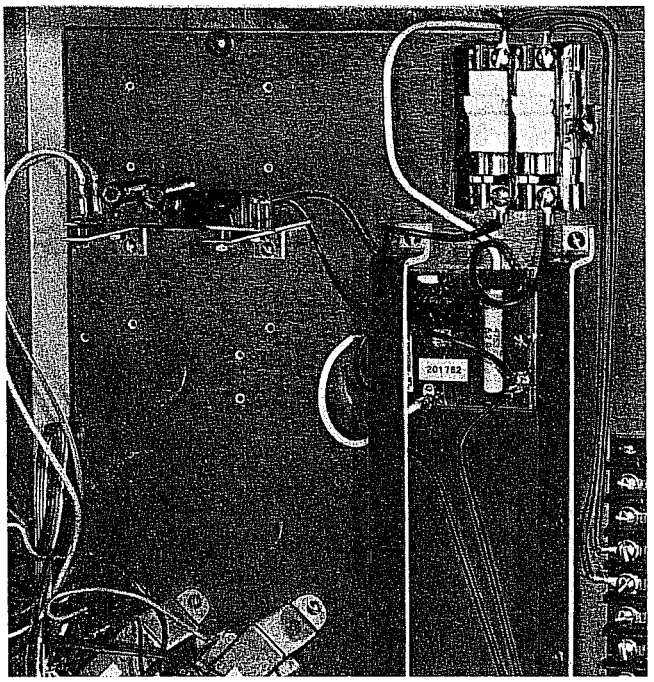

Figure 1
Battery-charging power-supply adapting accessory in Type ME control.

CONTENTS

	Page
PURPOSE	1
FACTORY INSTALLED	1
FIELD INSTALLATION PROCEDURE	3
TROUBLESHOOTING PROCEDURE	5
Accessory Logic	5
Voltage Checks	5
Schematic Diagram	6
DISABLING PROCEDURE	7

PURPOSE

Type ME controls are powered by a 24-volt nickel-cadmium battery located in the control cabinet. Approximately 15 milliamps constant-current trickle charge is supplied to the battery through batter-charging control circuits that are powered through connections from the recloser.

On Types RE, RVE, RXE, VWE, VWVE, WE, and WVE reclosers, a bushing current transformer inside the recloser supplies power to the battery-charging circuits. To maintain battery charge, line current through the recloser must exceed 25 amps for approximately 12 hours per day. Where this minimum line-current requirement is not met, the battery-charging power-supply accessory must be used and low-voltage battery charging power must be supplied.

This accessory adapts externally supplied 115- or 230-volt a-c power to the battery-charging circuits in the control. Battery charge is thereby maintained independent of line-current level.

The external supply is brought to a terminal strip mounted in the control cabinet.

Controls used with motor-operated reclosers do not require this accessory. Equipment provided in the operator cabinet on these reclosers adapts the 230-volt motor supply to power the control battery charger.

FACTORY INSTALLED

Factory-installed battery-charging power-supply accessories (KA458ME3 for 115 vac; KA458ME4 for 230 vac) are connected as shown in Figures 1 and 2 in controls having serial numbers above 16300.

The accessory can be placed in service by connecting the low-voltage supply at the terminal strip as indicated in Figure 2. With the low-voltage supply energized and the fused switches closed, the accessory will supply power to the battery-charging circuits in the control.

NOTE: To insure proper surge protection, check that the battery-charging accessory is connected to the OUT terminals on the surge-protection module and that the surge-protection module is connected to the fused switches as diagrammed in Figure 2.

These instructions do not claim to cover all details or variations in the equipment, procedure, or process described, nor to provide directions for meeting every possible contingency during installation, operation, or maintenance. When additional information is desired to satisfy a problem not covered sufficiently for the user's purpose, please contact your McGraw-Edison Power Systems Division sales engineer.

SP

McGRAW-EDISON COMPANY
Power Systems Division
Canonsburg, Pennsylvania 15317

March 1974
Supersedes 6/73

ACCESSORY TEST

The following test will confirm that charging current is being supplied to the battery.

1. With the low-voltage supply energized, fused switches closed, and the battery plugged in, operate the control to its closed reset position by moving the manual control switch on the panel to CLOSE.
2. Plug a d-c milliammeter into the current test terminals on the control panel (lower right corner).
3. Loosen the center terminal slightly and rotate the jumper link clockwise (pivots about far right terminal) to remove short from between terminals.
4. Current will flow in the direction shown by CHG. Under normal conditions, net charging current will be about 15 (±2) milliamps (see Note).

   NOTE: Certain control accessories add quiescent current drain. Most add less than one milliamp; those that add more than one milliamp are:

   Minimum-trip doubler (with supervisory contacts closed) 5.5 ma

   Remote-close (only while supervisory contacts are held closed) 18.0 ma

   Reset-timed-from-successful reclose when using 3-sec reset plug (less than one milliamp with longer reset times). 2.3ma
5. When test is complete, replace the jumper link across the terminals and remove the ammeter.

The battery-charging accessory test can be performed while the control is in the locked out state (battery off) if testing with the control closed is impractical. Current then being metered at the panel terminals will not be reduced by quiescent control or accessory drain and is the total charging current. The value will be approximately 17 (±2) milliamps.

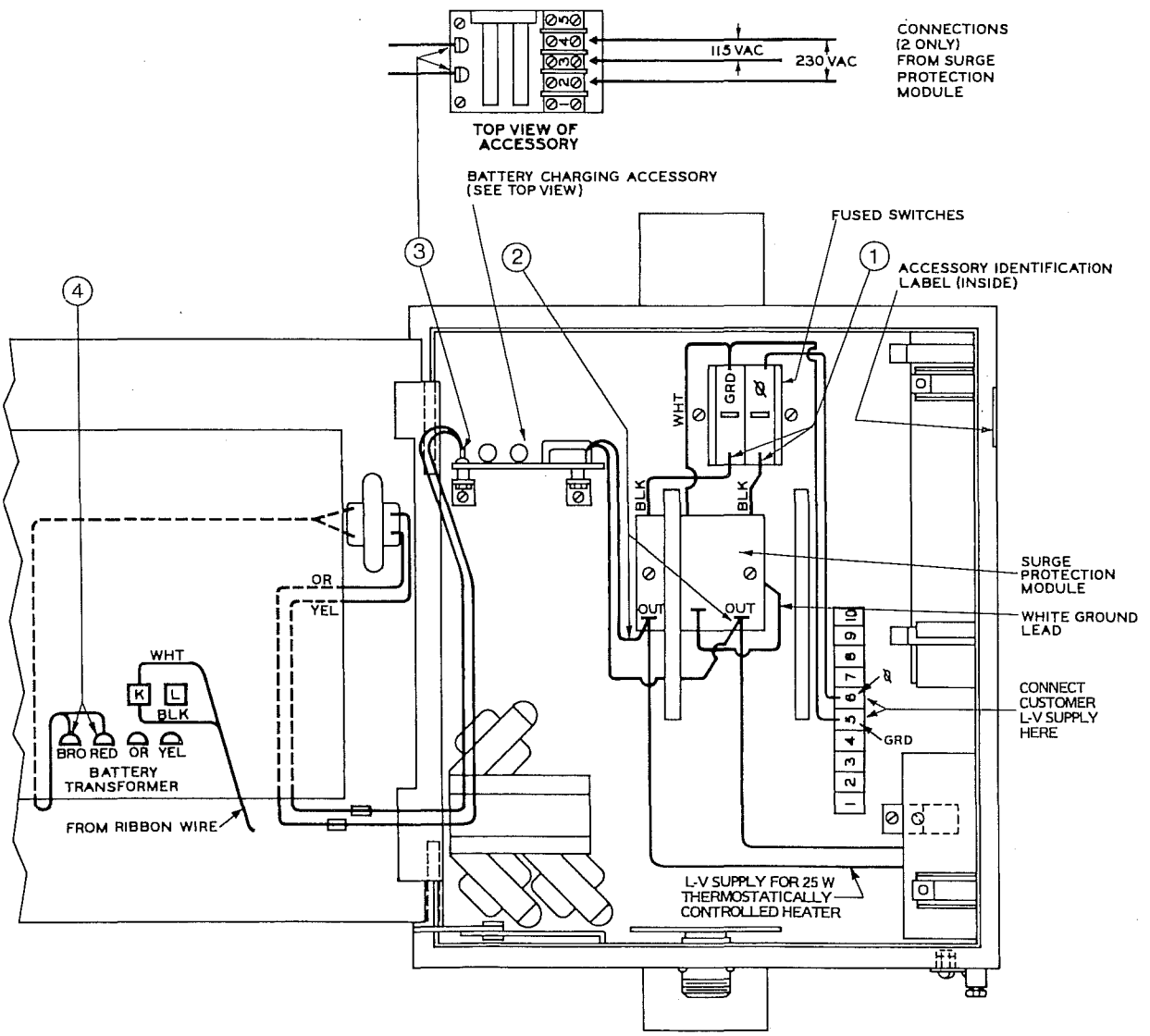

Figure 2
Connections for battery-charging accessory with surge-protection module and fused switches in Form 3 controls with serial number 16300 or above.

FIELD INSTALLATION PROCEDURE

Battery-charging power-supply adapting accessories can be field installed in existing controls. Mounting hardware and lead wires are included in the kits. Use the proper accessory, based on the supply voltage.

115 vac	KA458ME3
230 vac	KA458ME4

1. Bypass and trip the recloser, if it is in service, by moving the manual control switch on the panel to TRIP. With the control tripped it will be in the BATTERY-OFF position.
2. Disconnect the control cable.
3. Deenergize the low-voltage power (115- or 230-volt ac) if supplied to the control.
4. Release—and swing out—the hinged control panel to gain access to the inside of the control cabinet.
5. Disconnect the control battery at the battery-lead plug and receptacle.
6. Using the two 6—32x5/16 screws, install the battery-charging accessory board in a location shown in either Figure 2, 3A or 3B. (The battery-charging accessory board has right-angle mounting brackets and spacers attached.)
7. Disconnect the orange and yellow leads (pull off) from tie-board terminals 3 and 4 located in the lower-center area of the tie board (see Figure 2).
8. Connect the orange and yellow leads from the battery-charging accessory kit to the leads just removed from terminals 3 and 4. Insulate the two splices with the short pieces of PVC tubing provided.
9. Connect the other end of the new orange and yellow leads to the two tabs on the battery-charging accessory board.
10. Disconnect the white lead from tie-board terminal L (located just above tabs 3 and 4) and connect it to the upper tab of tie-board terminal K as shown in Figure 2.

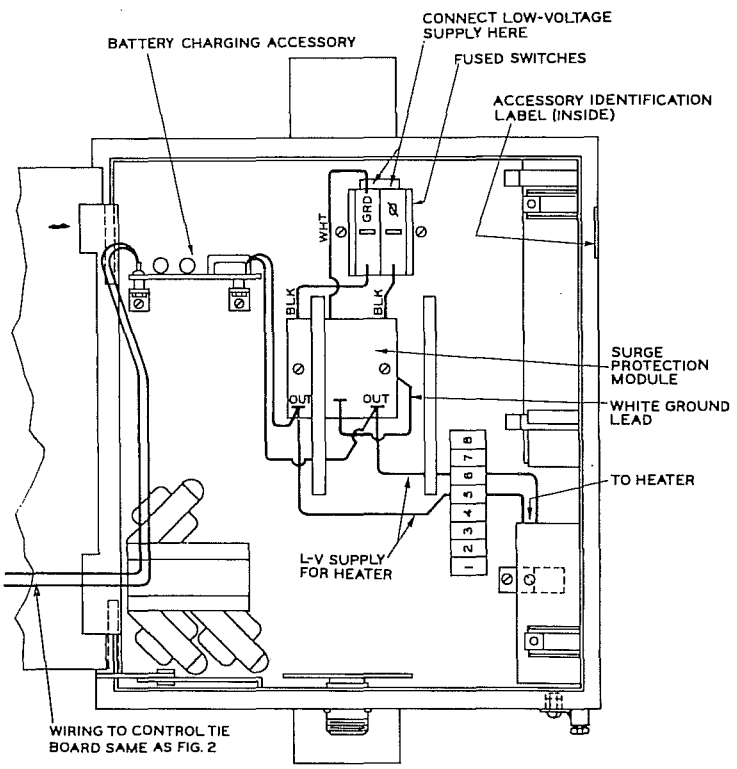

Figure 3A

Connections for battery charging accessory with surge-protection module and fused switches in Form 3 controls with serial number between 12250 and 16300.

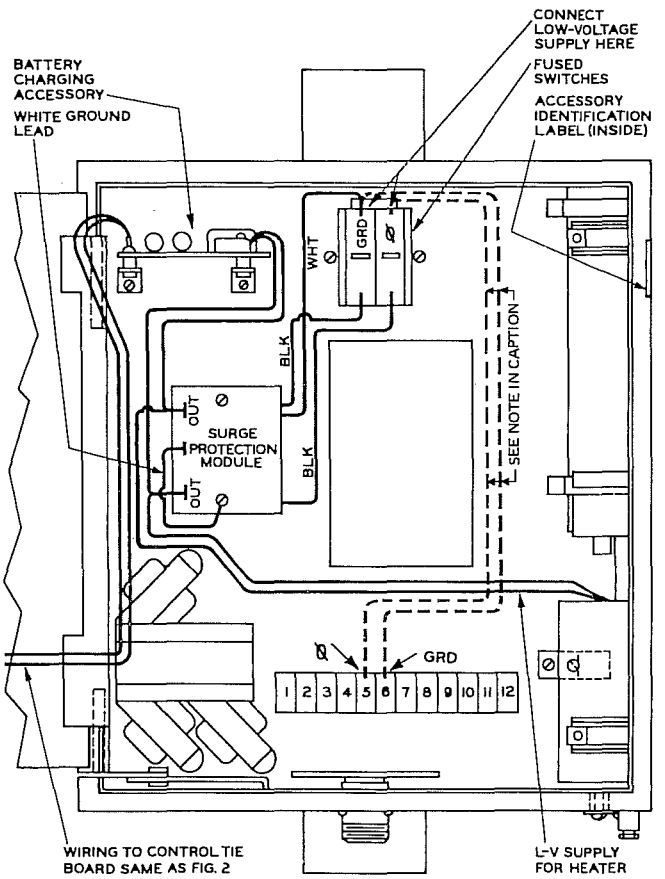

Figure 3B

Connections for battery-charging accessory with surge-protection module and fused switches in Form 3 controls with serial number between 5500 and 12250.

NOTE: If the low-voltage supply is already connected to the control cabinet terminal strip, simply add jumper wires between terminal strip and fused switch as shown by the dashed lines.

FIELD INSTALLATION PROCEDURE (continued)

11. Using the two 8–32x7/16 screws, flat washers, nylon spacers, and white ground lead, install the surge-protection module as illustrated in Figure 4.
    - **A.** In controls with serial numbers above 12250, holes are provided to mount the surge module in the position shown in Figure 2.
    - **B.** In controls with serial numbers between 5500 and 12250, holes may have to be drilled and tapped (for 8–32 screws) in the accessory mounting panel.

      NOTE: **Do not drill through back of cabinet.** Clean away all metal chips. Check that no chips are lodged on the input receptacle card (lower center), matching transformers, accessory boards, or terminal strips.
12. Install the fused switch sections and end plates using the two 8–32x3/8 screws and lockwashers.
    - **A.** In controls with serial numbers above 12250, holes are provided to mount fused switches in the position shown in Figure 2.
    - **B.** In controls with serial numbers between 5500 and 12250, holes may have to be drilled and tapped (for 8–32 screws) in the accessory mounting panel. See note above on drilling precaution and chip removal.
13. Mount labels.
    - **A.** The accessory identification label should be applied to the right, inside wall of the control cabinet.
    - **B.** The voltage marking label should be applied above the fused switch.

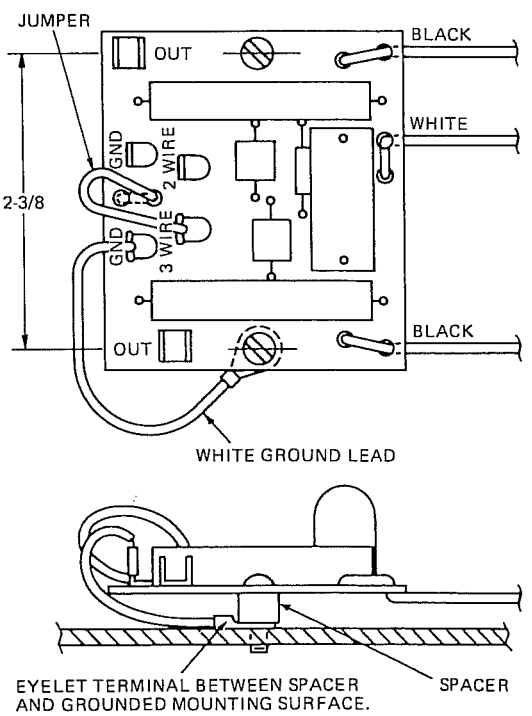

Figure 4
Surge-protection module mounting.

14. Connect the push-on terminal of the white surge-protection-module ground lead to a ground tab on the module, per one of the following:
    - **A.** On 115-volt modules, connect the ground lead push-on terminal to the ground tab marked GND (See Figure 5A).
    - **B.** On 230-volt modules where the supply is a two-wire system having one side grounded, connect the ground lead push-on terminal to the tab marked 2-WIRE GND and connect the white module jumper to the tab marked 2-WIRE (See Figure 5B).
    - **C.** On 230-volt modules where the supply is a three-wire system, connect the ground lead push-on terminal to the tab marked 3-WIRE GND and connect the white module jumper to the tab marked 3-WIRE (See Figure 5C).
15. Using two of the four black lead wires supplied, connect the OUT terminals on the surge-protection module to the appropriate terminals on the battery-charging accessory board. (See top view in Figure 2.)
16. If the 25-watt thermostatically controlled heater accessory is included in the control (lower-right corner of cabinet), it too should be connected to the out terminals on the surge-protection module. Using the other two black lead wires supplied, make this connection as shown in Figure 2, 3A, or 3B.

    NOTE: In addition to the heater and battery-charging accessory, the reclose-blocking and contact-position indicating accessories should also be connected to the OUT terminals for proper surge protection. If the control contains these accessories, revise the connections to the low-voltage supply accordingly. If the reclose-blocking accessory is connected to a separate supply, it should have its own surge-protection module.
17. Using the polarity specified in either Figures 5A, 5B, or 5C, connect the three surge-protection-module leads (two black and one white) to terminals on the fused switch as shown in Figures 2 or 3A.

    If fused switches cannot be installed, the surge-protection-module leads should be connected to the terminating point of the control's low-voltage supply.
18. Connect the low-voltage supply to terminals 5 and 6 on the terminal strip as shown in Figure 2, or to upper terminals on the fused switch as shown in Figures 3A and 3B. Observe the polarity specified. For surge-protection purposes, the grounded side of the low-voltage supply must be connected to the proper terminal.
19. After confirming that all connections are correct, the battery charging accessory may be tested for proper operation. Reconnect the battery leads, energize the low-voltage supply, and refer to the test procedure listed earlier in this bulletin.
20. After testing, reconnect the control cable and return the recloser to service.

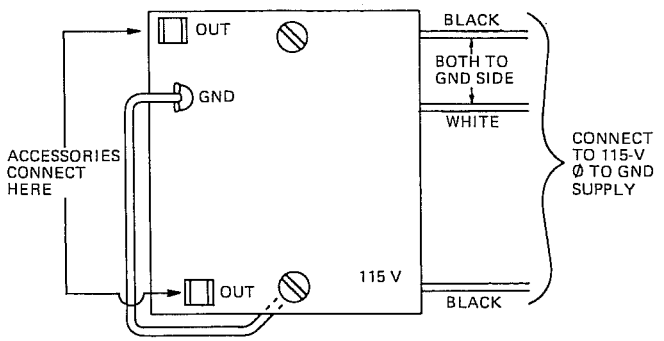

Figure 5A

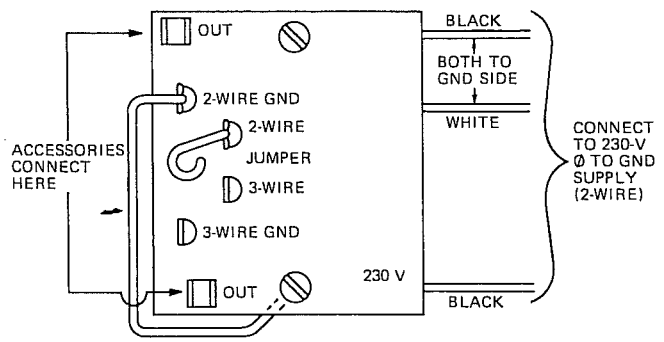

Figure 5B

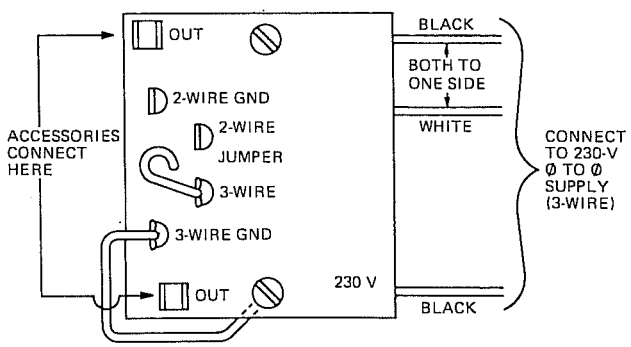

Figure 5C

Figure 5
Surge-protection module ground-lead, jumper, and source-lead connections.

TROUBLESHOOTING PROCEDURE

If charging current is not being supplied to the control battery as described under Accessory Test, the following troubleshooting procedure will determine whether or not the accessory is at fault:

ACCESSORY LOGIC

The battery-charging power-supply accessory is essentially a series current-limiting resistor inserted in the control's isolation-transformer primary. This current source replaces the bushing-current transformer built into Type RE, RVE, RXE, VWE, VWVE, WE, and WVE reclosers to supply power for the control-battery charging circuits.

A surge-protection module is provided with this accessory and is connected between the accessory and its low-voltage supply. The module contains hermetically sealed spark gaps connected between the energized supply line(s) and ground. Also part of the module are series deionizing resistors connected between the gaps and source to help clear gap sparkover to ground. The maximum load current that can be accommodated through the surge-protection module is 0.75 amp for 115-volt modules and 0.5 amp for 230-volt modules.

Fused switches are also provided and are connected between the surge-protection module and the low-voltage-supply connection point. Fuses in each leg are 6-amp Buss Type BAN. A ground jumper (white) is used to bypass the fuse in the grounded leg of the low-voltage supply to prevent fuse melting due to surge currents.

VOLTAGE CHECKS

With the accessory installed and connected, the low-voltage supply energized, and the control battery connected, voltage checks at the points tabulated will confirm accessory operation. Numbers in parenthesis are for the 230-volt accessory. Refer to Figure 2 for test-point locations.

Voltage Checks

Test point	Voltage Reading	If voltage reading is not obtained, check:
① Load side of fused switches	120 vac, supply nominal (240)	Low-voltage supply. Fuses. Fused switch properly inserted.
② Surge-protection module output (OUT) terminals	119 vac nominal (238)	Module connections and for open circuit.
③ Load side of charging accessory board	40 – 44 vac (40 – 44)	Accessory board connections and for open circuit.
④ Isolation transformer secondary	34 – 38 vac (34 – 38)	Isolation transformer
⑤ Red-black terminal pair on front of control panel (not shown on drawing)	27 vdc (27)	Battery charging board on back of swing panel. Refer to control maintenance manual 281-27SB-2

ACCESSORY SCHEMATIC

Schematic diagrams of the the battery-charging accessories are shown in Figure 6.

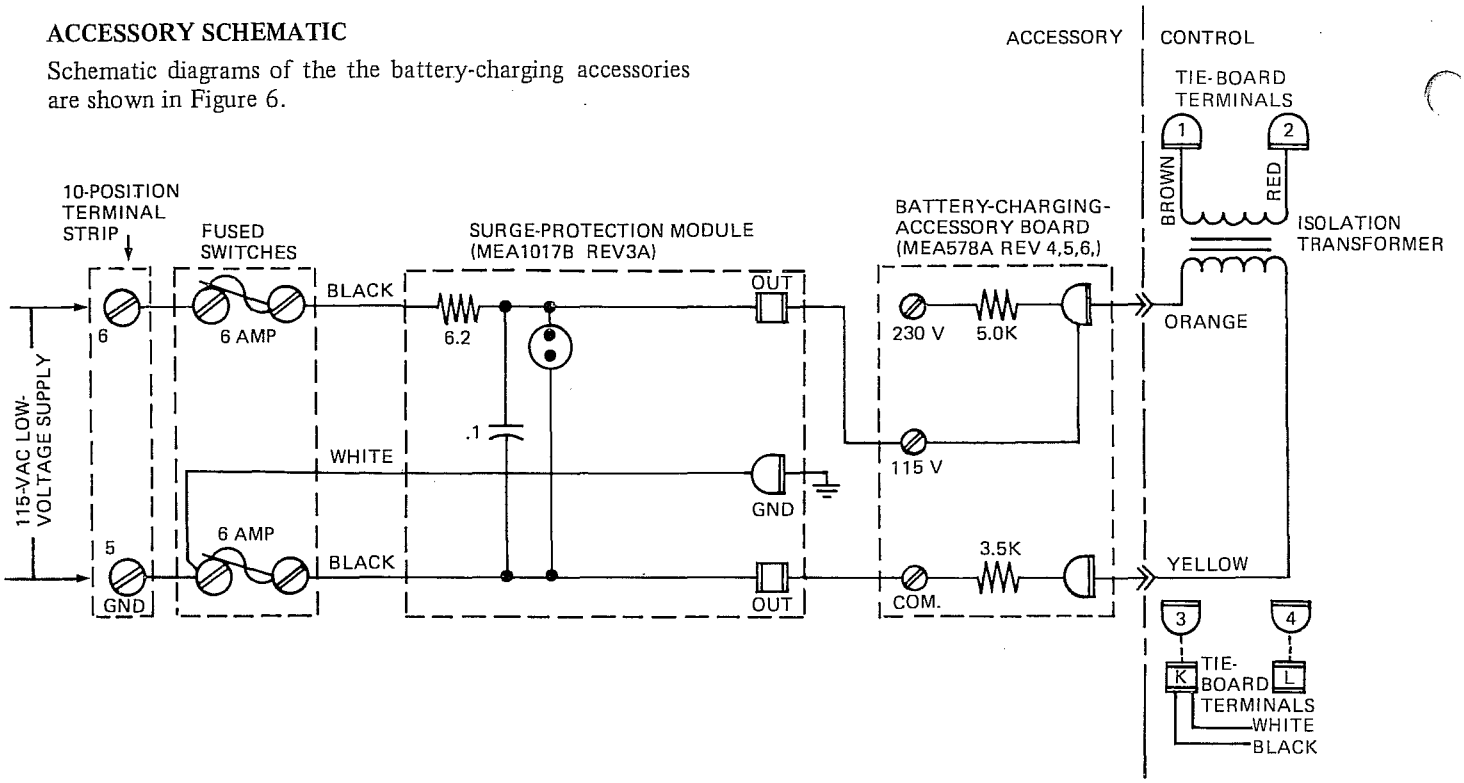

Figure 6A

Schematic diagram of battery-charging accessory for 115-volt operation

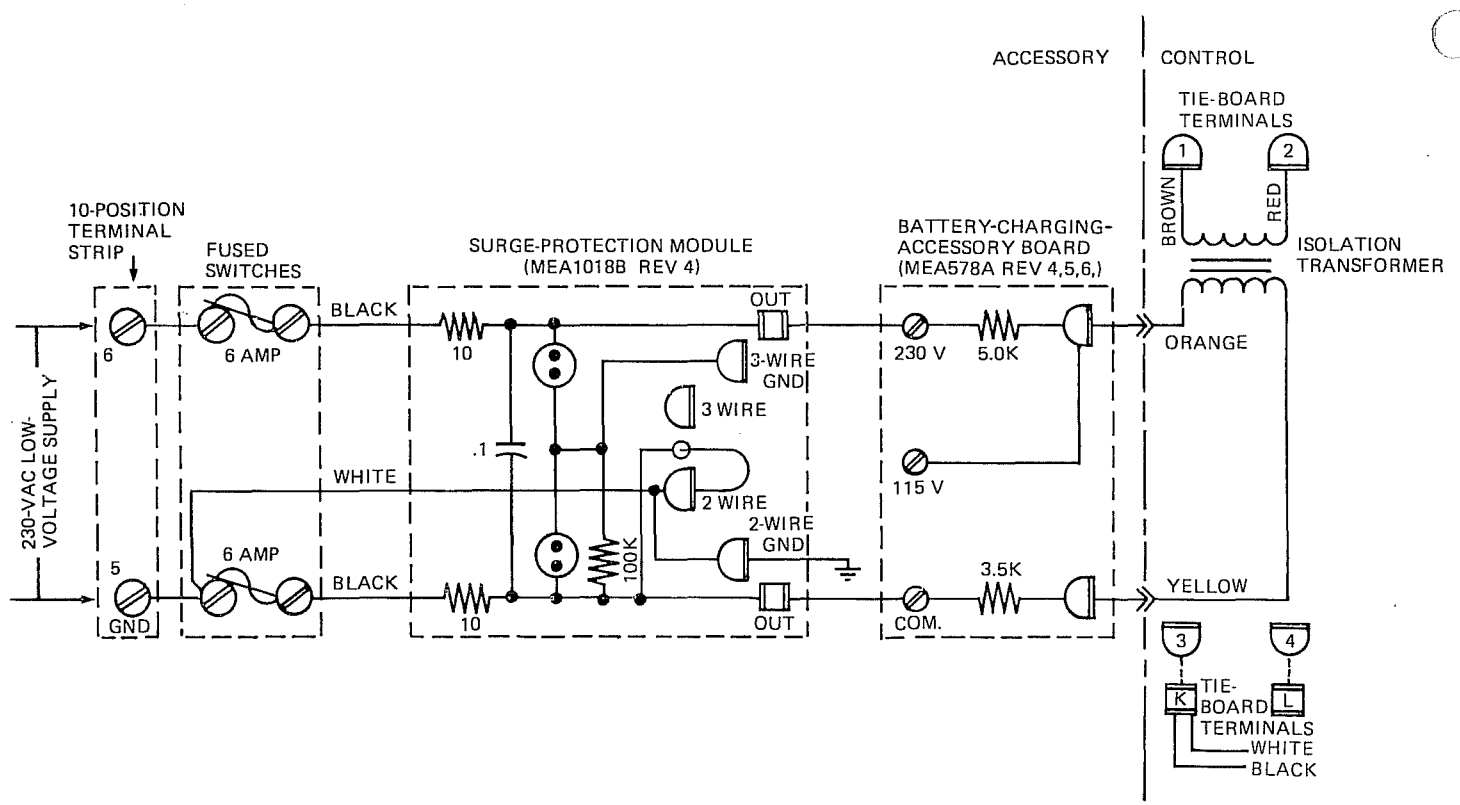

Figure 6B

Schematic diagram of battery-charging accessory for 230-volt operation

DISABLING PROCEDURE

The battery-charging accessory can be disabled by either of two methods:

1. Deenergizing the low-voltage supply by pulling the fused switches.

CAUTION

If this method is used, all other control features that may use the same low-voltage supply (cabinet heater, reclose-blocking accessory, contact-position-indicating-lights accessory) will also be deenergized.

2. Disconnecting accessory leads from the OUT terminals on the surge-protection module.

WARNING

Electrical hazard! Be sure to deenergize the low-voltage supply at the fused switches before disconnecting accessory leads. Reenergize afterward.

REFERENCE
SF_6 GAS

Created by: M. Rideout
Revised by: B. Ropson, M. Murphy
Reviewed by: G. Samms
Approved by: G. Samms

MSR019-1: Precautions to be Observed When Handling Arced Sulfur Hexafluoride Gas

SF_6 gas, in the pure state, is colorless, odorless, tasteless and non-toxic. Toxic decomposition products are formed in the gas when arcing occurs in it. Do not breathe gas containing these toxic products until the decomposition products are safely diluted with fresh air.

Molecular sieves, used is all SF_6 breakers, removes the chemically active products formed during arcing. Therefore, operating personnel will not be exposed to a significant amount of toxic gas after the breaker is opened. The absence of any detectible odor or nasal irritation should indicate safe working conditions.

Caution should be observed to prevent the inhalation of the fine metallic fluoride dust when exposed to it. A dust mask should be worn where this dust is present, and it is advisable to avoid skin irritation by wearing gloves and keeping other parts of the body covered. Vacuum cleaning equipment may be used to remove arc powders. It is recommended that personnel exposed to arc powders wash carefully to remove the metal salts from the skin.

MSR019-2: Interrupter Operating Pressure Range

The following table is attached to the back of the Westinghouse Type SP breaker cabinet.

SF_6 Interrupter Operating Pressure Range Versus Ambient Temperature

Gas Pressure		Temperature	
Normal	**Minimum**	**^oF**	**^oC**
83	72	110	43.3
79	68	90	32.2
75	65	70	21.1
71	61	50	10.0
67	58	30	-1.1
63	54	10	-12.2
59	51	-10	-23.3
56	49	-22	-30.0

The gas pressure switches on the above mentioned circuit breaker should be set to alarm at 55 psi on falling pressure.

Caution: The breaker must not be tripped without having normal operating SF_6 gas pressure. Failure to have sufficient SF_6 gas pressure could result in breaker failure, leading to a possible explosion. If the pressure is below minimum operating pressure, as shown in the above table, the beaker should be removed from service by first isolating it from the power system. Do not trip the affected breaker prior to isolation.

MSR019-3: Nu-Lec Circuit Breaker SF_6 Recharging

Circuit breaker SF6 recharging is carried out using a Gas Fill Adapter (GFA) (Nu-Lec Industries Part No. N05-615) and a standard size D SF6 cylinder (Nu-Lec Industries Part No. GAS064011).

REFERENCE
SF_6 Gas

The recharging procedure is as follows:

1. Calculate the required pressure to suit the ambient conditions.

   Note: The circuit breaker is refilled to a pressure of 35kPa on the gauge corrected by +0.46kPa for every degree Celsius above 20°C. For altitudes above 1000m the gauge pressure should be corrected for altitude.

2. Remove the cap from the gas fill valve on the lower back of the circuit breaker.

3. Connect the gas fill adapter to the SF_6 cylinder and slowly open the valve on the cylinder to bleed gas into the hose. Close the valve on the gauge assembly when the air in the hose has been flushed.

4. Check that regulator output pressure is between 50-100kPa. If it needs to be reduced, wind anti-clockwise and release a small amount of gas to check setting.

5. Push in the knurled ring on the gas fill valve and plug in the mating part of the gas fill adapter hose. The circuit breaker gas pressure should now be visible on the pressure gauge.

6. Open the valve on the gas assembly to bleed gas into the circuit breaker. This operation will be carried out slowly and care must be taken not to over-pressurize the breaker. A relief valve is fitted to the gas fill adapter for safety purposes but it will not protect the circuit breaker from over-pressure. If excess gas is put into the circuit breaker it can be released by disconnecting the gas fill adapter from the gas cylinder.

7. The gauge reads high when gas is flowing, so the pressure must be monitored during the filling process. Do this by turning off the valve on the gauge assembly at regular intervals to get the correct pressure reading.

8. At correct pressure, turn off the gas assembly valve and then the cylinder valve.

9. Unplug the gas fill hose valve by pushing in the knurled ring on the gas fill valve.

10. Remove the old 'O' ring from the gas fill valve and discard. Clean the 'O' ring seat on the gas fill valve and cap with a clean lint-free cloth. Grease with DOW111 silicone grease (Nu-Lec Industries Part No. LUB058040) and fit a new 'O' ring (Nu-Lec Industries Part No. ORG025024). Replace and re-tighten cap.

It is recommended that the Gas Fill Adapter (GFA) is used for recharging. However, other SF_6 charging equipment can be connected to the circuit breaker with a Swagelok fitting (Part No. B-QM2-S-2PF).

Warning: Any non-Nu-Lec equipment must be suitable for the purpose (i.e. is airtight and won't allow over-pressure). The Swagelok fitting is not suitable for permanent sealing and must be disconnected after the charging operation is complete. The permanent seal is formed by the 'O' ring in the base of the fill valve sealing onto the cap. This 'O' ring must be replaced after any recharging operation.

MSR019-4: Evacuating SF_6 Circuit Breakers

If an SF_6 circuit breaker must be evacuated, a proper storage bottle must be used. SF_6 gas has a vapour pressure of approximately 310 psia @ 21.1°C, or about 295.3 psi at sea level. Once gas is filled to this pressure in the storage bottle, the gas will liquefy and no further pressure increase will result until the bottle is overfilled. SF_6 storage bottles are rated on their SF_6 weight capacity, not on the basis of pressure. Be sure not to fill a bottle past its maximum gross weight. All approved bottles for SF_6 should have tare (empty) weight and maximum gross (filled) weights stamped on the bottles. For example, bottle EMC-SF6-001 has a tare weight of 115 lbs. and a maximum gross weight of 230 lbs.

REFERENCE
SF_6 Gas

Here are some other properties of SF_6 gas:

- Molecular weight: 146.05 g/mol
- Latent heat of fusion (14.7 psi, at triple point): 18.03 kJ/lb
- Liquid density (at triple point): 117 lbs/ft3
- Boiling point (Sublimation): -63.9 °C
- Latent heat of vaporization (14.7 psi at boiling point): 73.57 kJ/lb
- Vapor pressure (at 21 °C or 70 °F): 311.83 psia
- Critical temperature: 45.5 °C
- Critical pressure: 545.2 psia
- Triple point temperature: -49.4 °C
- Triple point pressure: 32.77 psia
- Gas density (14.7 psi and 15 °C (59 °F)): 0.391 lbs/ft3
- Compressibility Factor (Z) (14.7 psi and 15 °C (59 °F)): 0.9884
- Specific gravity (air = 1) (14.7 psi and 21 °C (70 °F)): 5.114
- Specific volume (14.7 psi and 21 °C (70 °F)): 2.5 ft3/lb
- Heat capacity at constant pressure (Cp) (14.7 psi and 21 °C (70 °F)): 0.097 kJ/(mol.K)
- Viscosity (14.7 psi and 0 °C (32 °F)): 0.000142 Poise
- Thermal conductivity (14.7 psi and 0 °C (32 °F)): 12.058 mW/(m.K)
- Solubility in water (20 °C and 1 bar): 0.007 vol/vol
- Density of liquid under vaporization pressure: 73.9 lbs/ft^3

MSDS for SF_6 from Air Liquide are online at http://encyclopedia.airliquide.com/encyclopedia.asp?gasID=34

REFERENCE
SILICA GEL

Created by: M. Rideout
Revised by: B. Ropson
Reviewed by: G. Samms
Approved by: G. Samms

MSR020-1: Silica Gel Breathers

Silica gel breathers are designed to remove moisture from the air breathed into the equipment on which they are installed.

The silica gel container is filled with impregnated silica gel, which is blue in color when in the dry state. During "in breathing" of the equipment, air passes through this material which absorbs the moisture, allowing only dry air to pass through. As the silica gel becomes saturated with moisture, its color changes to a whitish-pink.

Some breathers have an oil seal located at the bottom of the container. This prevents a free path from the outside air to the silica gel and inhibits the silica gel from absorbing moisture from the outside air when no breathing is taking place. The oil seal should contain the correct amount of oil, as indicated by the manufacturer's instructions.

The silica gel should be renewed when the pink color begins to appear in the upper part of the breather (approximately three-quarters of the height of the silica gel in the breather), otherwise some moisture will be retained in the air that passes into the unit.

The damp silica gel can be dried out by placing it in an open pan in an oven and drying it at a temperature of 250°C for about three hours, or just long enough to remove the moisture absorbed in previous use. When dry, the material is blue in color. The initial change in color should not be considered as complete reactivation sine the particles dry from the outside towards the center and the outer surface changes color first. Therefore, the particles should be checked to ensure that they are dried completely through.

REFERENCE
TAPCHANGERS

Created by: B. Ropson
Revised by: M. Robinson
Reviewed by: G. Samms
Approved by: G. Samms

MSR021-1: Points Relevant to Specific Tapchangers

Westinghouse Type UTT

1. The motor is designed for operation in oil and may exceed safe temperature limits if operated in air for more than 10 or 12 steps in succession. If the motor must be operated in air, allow sufficient cooling time between each series of 10 or 12 operations.

2. We have had two motors fail. In both cases, the tapchangers were relatively new. The motors were rewound and had bearings replaced. In another case, there was a motor shaft failure. It appears that the motor was set up with too tight a mesh in the gear teeth, which exerted a bending force on the shaft, causing it to sheer off in fatigue. A new motor was installed in such a matter as to assure proper gear mesh without causing undue bending on the shaft.

3. The motor reversing contactor on some tapchangers have failed to function properly after a short time in service. The main contacts tend to stick in the closed position after a sticky-type deposit has formed on the contacts and the magnet pole pieces. These Westinghouse contactors have proven to be of a poor quality. Hey have been replaced with ASEA contactors in many of our tapchangers and the intention is to eventually have them all changed. The better quality ASEA contactor has been specified for new transformers.

4. During inspection of a new tapchanger, it was found tat the left-hand transfer switch was sluggish in operating. It was being bound up by a snap ring, The snap ring, located on the shaft just to the left of the transfer switch arm, was removed; a hacksaw blade was ran several times through the groove that holds the snap ring; the snap ring was then replaced and the transfer switch operated freely.

Federal Pioneer

1. Never run the tap gear without oil and with the driving spring connected. If it is necessary to operate the mechanism either electrically or manually, then sufficient oil to cover the driving spring assembly must be left in the sump of the tap gear housing. Failure to do so will result in mechanism damage. If it is inconvenient to do this, then the driving springs must be disconnected by removing the two bolts in the crosshead bearing with the springs in the discharged position.

2. After disconnecting driving chain or timing gears for work on the control mechanism, ensure that gears are re-meshed and reassembly is done without affecting the timing of the unit.

3. Special attention should be paid to the proper operation of the limit switches. If coasting of the mechanism is too great after the limit switch opens, the brake shoe running on the motor pinion may need replacing. Detailed instructions for checking this function are given in the manufacturer's instruction manual.

4. Pay particular attention to clearances, measurements and the arcing tips on the diverter contact assembly. It is very important to change arcing tips when required so as to avoid damage to the tap gear.

NEWFOUNDLAND POWER
A FORTIS COMPANY

REFERENCE
TAPCHANGERS

MSR021-2 - Load Tap Changer Maintenance and Contact Materials

Historically routine load tap changer maintenance intervals were based on experience, manufacture type, number of operations, loading characteristics which are very important to the longevity and integrity of the equipment.
Since the implementation of the Reliability Centered Maintenance Program and limited funding to conduct scheduled routine maintenance activities it became imperative that our maintenance practices and diagnostics would have to change. To meet the objectives outline in your new Reliability Centered Maintenance Program initiated periodic diagnostics, on line monitoring, and contact enhancements, and maintenance practices.

Typical Load Tap Changer Failures:

A. Main Dial Switch:
1. Arcing contact fracture
2. oxidation
3. overload
4. misalignment
5. past due maintenance

B. Reversing Switch :
1. Inactivity in operating
2. High contact resistance
3. overheating
4. coking

C. Load Transfer:
1. Contact erosion from normal loading
2. Mechanical failure from poor timing
3. improper contact alignment
4. weak drive spring assembly

Maintenance Techniques:

Load tap changer contacts operate under the same principles as circuit breakers, so it is important that the timing and speed of the contacts between steps is adequate to elongate and quench the arc. During inspections and overhauls the tap changer should operate at the same speed in either direction. If not, investigation may disclose contact binding, weak or broken drive springs, motor timing, improperly adjusted latch, or dynamic braking not releasing properly. One means of monitoring the drive mechanism is to check the motor current periodically. Audible sound or arcing is a good indication that the load tap changer is operating sluggishly.

A technique used to maintain accurate contact pressure is to verify the spring tension on the back up springs per the manufactures specifications to avoid high contact resistance and coking. Typical contact pressures for the main moveable and reversing switch assemblies typically range from 8 - 12 lbs. Once the contact pressure has been confirmed than clean the copper oxide from the copper contact surface with a light grade scotch brite pad (447 or 448), and verify the contact resistance with a ductor tester. Silver plated contact surfaces should not be dressed nor cleaned with the scotch brite pad since the silver plating enhances the conductivity of the contact surfaces. Typical contact resistance reading should range from 30- 80 micro-ohms for either the reversing, selector, or load transfer contacts. It is recommended that during each overhaul that the contact resistance be recorded for future trending by manufacture type.
(refer to attachment 1)

By virtue of design and loading criteria several different type tap changers will re-strike during the tap change. This generates carbon which breaks down the dielectric strength of the oil and associated insulating mediums within the load tap changing compartment (s). This situation may be caused by design and not necessarily by excessive load current or inadequate conductivity of the contact assembly. Areas that can cause carbonizing of the insulating oil are loading characteristics, such as power factor, inadequate contact pressure, or overloading the load tap changer.

REFERENCE
TAPCHANGERS

Under these conditions, it maybe necessary to re-evaluate the loading profile, or consider an on line filtration system to eliminate the carbon build up due to re-strike of the load transfer contacts.

The decision analysis to install the on line filtration system due to re-strike problem or upgrade to silver tungsten contact materials due to thermal loading characteristics can be determined by the maintenance engineer responsible for the integrity of the equipment.

On Line Diagnostics:
The diagnostic tools used to verify the operating condition of the load tap changer may include infared, dissolved gas in oil, oil quality, temperature differential between the main and tap changer compartments, or on line monitoring (LTC Map or CSM3 monitors) to track and trend motor current, contact wear, voltage / current levels etc.

Contact Materials Test Data:
Several manufactures and contact re-builders supply contact materials that meets or in some cases exceeds the original equipment manufacturer's (OEM) parts specifications. From experience enhancing the material type over the original equipment manufacture in most cases has proven to be cost effective in extending the maintenance intervals. All enhancements must be installed as an assembly, interchanging materials has caused high contact resistance, contact coking, which will result imminent contact failure.
During the material analysis three major areas were considered were conductivity, hardness, silver plating, springs, and brazing.

1. Conductivity - Conductivity of the contact is primarily affected by the hardness of the material. For arcing contacts you would expect to have a very low conductivity and a high hardness of silver tungsten. For current carrying contacts you would expect to have very high conductivity, and low hardness.
2. Hardness - The test were conducted utilizing a Rockwell hardness tester, with some additonal information obtained with a Krautkramer, MicroDur. Many of the readings are in the Rockwell F scale, which is often used for copper and metals softer than steel. Steel and tungsten powder alloys are in the Rockwell B (HRB) scale.
3. Silver Plating - To eliminate or minimize contact coking several contact manufactures will silver plate the contact matting surfaces. The 3 mil of 99% silver plating improves the conductivity between the contact surfaces which often is not utilized in all contact assemblies

1. Spring Tension - Backing spring material is critical in maintaining a spring constant for proper contact resistance, pressure, and continuity. Contact manufactures typically utilize carbon steel material consisting of 4140 series material which has maintained a very good spring constant within life expectancy of the contact material. Some contact manufactures have opted to utilize stainless steel springs with upgraded contact materials in the 304 series material have a tendency to loose their spring constant. The desired stainless steel material recommended for the application is 17-4 which is age harden material so it will maintain the spring constant.

2. Brazing - The two methods in which the contact tips are fused onto the contact material is either by induction brazing or gas torch. The preparation of the contact surface and geometry of the contact tip to the contact is very critical for the fusion process to take place. Prior to utilizing contact tip material it is important that the contact tip material be tinned. Tinning is a process where granulated silver is fluxed and bonded to the surface of the contact tip as part of the tip manufacturing process. Prior to brazing it is necessary to etch the material surface to provide an improved surface for the solder to flow. Contact tips are cleaned in a vapor degreaser followed by a muratic acid and water rinse, in the case of copper sodium nitrite and water rinse. Once the contact material has been prepared than the temperature of the matting material is brought up to approximately 1100 degrees than the flux material fuses the matting contacts surfaces.

REFERENCE
TAPCHANGERS

Contact Pressure:
Use:
Cooper load cells are generally used to measure and detect forces or changes in the magnitude of forces.

Load Buttons:
Whenever possible use the load buttons with spherical surfaces. This will concentrate the applied force on the center of the load cell. It is important to make sure that the two surfaces which come in contact with the load cell are parallel If not the load will be placed off center resulting in a less accurate result.

***Load Cell Capacity*:**
The practical usable range of a load cell is generally 10% to 100% capacity. If you exceed the capacity then obviously the unit is overloaded and permanent deformation may result or the unit could be crushed. Dropping calibration weights on the cell even from a small height could crush the force cell. Be careful and slowly place the load on the load cell. Make sure the load cell is not slanted at an angle since it is important that it is positioned perfectly vertical or in line with the applied force. Make sure there are no side loads applied to the force cell unless it is specially designed to withstand side loading.

Load Cell:

General Information:
1. Verify that all contact resistance measurements are similar between phases and within acceptable ranges
2. If the total contact resistance is above acceptable levels between the main moveable and hub / ring contacts measure across each individual component to isolate the high resistance contact.
3. Confirm that the contact pressure is within the manufactures recommended tolerance. Typical moveable and reversing switch contact pressure range from 10 - 12 lbs.
4 Contact resistance for the main moveable, reversing, and transfer contacts is normally are between 30 - to 80 micro-ohms. Measuring between the main stationary to either the slip ring or hub contact maybe in the range between 60 - 160 micro-ohms. (refer to attachment - 1)
5. Check Contact Alignment, and wipe between moveable and stationary contacts
6. Do not file or sand contact surfaces that are silver- plated. Silver-oxide is a conductive material, as where copper oxide acts like a semi-conductive material that impedes the conductivity of the contacts surfaces that typically result in contact coking. Utilize Scotch Brite Pads 447 or 448 to remove oxidation from contact surfaces.
7. Thoroughly inspect all contact surfaces, backing springs, terminal connections, and leads that appear inadequate during the maintenance overhaul.
8. Verify Latch Adjustment on Drive Mechanism - Snap Action and on On-Step Position

REFERENCE
TAPCHANGERS

9. Replace tap changer oil if the acidity exceeds 0.06 KOH, or dielectric cannot above 25 kv.
10. Lubricate drive mechanism with Dow Corning lubricants #3451, and Moly Penelube.

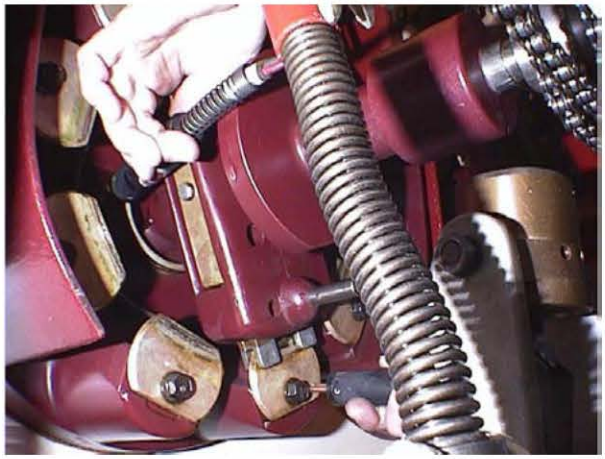

REFERENCE
TAPCHANGERS

Attachment 1
Resistance Table

Manufacture Type	Main	Transfer	Reversing
GE LRT65	40 - 60	25 - 40	30 - 40
FPE 546	120 - 140	30 - 50	30 - 46
AC AFR / TLF	150 - 250		140 - 190
Rienhausen RMT	90 - 100	90 - 100	90 - 100
Rienhausen RMV11	50 - 60		15 - 20
GE MLT32/LRT48	175 - 225		90 - 160 / ELR - 60
AC TLS	118 - 130		26 - 55
AC TLH21	150 - 190		40 - 50
West. URS	150 - 170		70 - 100
West UNR	75 - 175		35 - 45
West UVT			25 - 40
West URT		20	20
West UTTB	80 - 90	100 - 120	18 - 34
McGraw 550BLS	40 - 60		25 - 30
West URT			30 - 50
Moloney SRT-MB			250 - 500
Moloney MA	200 - 300		
Wakashua UZD	80 - 100		110 - 190
ABB UZDRT	75 - 90		25 - 30
ABB UZERT	45 - 70		50 - 80
ABB UZERN	140 - 150		30 - 40

NEWFOUNDLAND POWER
A FORTIS COMPANY

REFERENCE
TAPCHANGERS

Part Identification	Location	Percent Tungsten or other chem.	Hardness, Rockwell B or Rockwell F	Electrical Conductivity	Silver Plated Contact	Lack of Braze
CONTACT	CONTACT	69	93	40		24%
URS moving contact	CONTACT	73	93	49		5%
subassembly #1	BODY	0		103	Y	
OEM stationary contact	CONTACT	69	93	41		
URS moving contact	CONTACT	52	87	42		
subassembly	BODY	0		103		
550C stationary contact #1	CONTACT	69	89	49		4%
subassembly #1	CONTACT	63 / Silver	79	52		
subassembly #2	CONTACT	65 / Silver	81	53	Y	35%
550B #1	CONTACT	64 / Silver	77	55		
550B #2	CONTACT	64 / Silver	77	59	Y	22%
550B #2	CONTACT	54 / Silver	82	54		
LRT 72 #1	CONTACT	68	86	51		
subassembly	BODY	0		46		
subassembly	BODY	0		100	Y	
same	CONTACT	70	97	34		
same	BODY	0		32		
UTTB Transfer sw. stationary arcing Contact - #1	CONTACT	70	92	50		
UTTB - O.E.M	CONTACT	69	87	57		
UTTB transfer moveable arcing. - #1	BODY	70	91	54		
UTTB Contact moveable 2000A 26KV - .O.E.M	BODY	69	87	56		
ITE/ABB main stationary contact finger assembly - #1	CONTACT	Silver Moly	95F	40		
ITE/ABB stationary contact finger - #2	CONTACT	66 / Silver	85	47		
subassembly	BODY		66	71		
ITE/ABB arcing contact finger #1	CONTACT	75	96	28		21%
subassembly	BODY		25F	88		
ITE/ABB stationary arcing finger (one button) #2	CONTACT	68	87	48		13%
subassembly	BODY		98F	71		
ITE/ABB stationary contact finger assembly - #1	CONTACT	67	93	39		
subassembly	BODY		32F	80		
ITE/ABB stationary contact sm finger - #2	CONTACT	67	87	48		
subassembly	BODY		51	93		
URT transfer switch arcing contact - #1	CONTACT	50	92	40		31%
subassembly	BODY	4	82	18		
URT transfer switch stationary arcing contact - #2	CONTACT	69	89	55		31%
subassembly	BODY	0	57F	36		
URT transfer switch arcing contact - #1	CONTACT	48	92	40		19%
subassembly	BODY	Yellow brass	43	22		
URT West URT transfer	CONTACT	69	88	52		4%

REFERENCE
TAPCHANGERS

moving arcing contact assy #2						
subassembly	BODY	Bronze	58	37		
URT transfer switch arcing contact - #1	CONTACT	67	92	50		
subassembly	BODY		33F	99		
URT W URT transfer stationary auxiliary arcing contact - #2	CONTACT	69	92	51		
subassembly	BODY	Chrome Copper?	95F	80		
GE FK moving contact rod #1	CONTACT	Silver/Moly	68	58		9%
subassembly	BODY		63	93		
GE FK moving rod assembly - #2	CONTACT	Silver/ Moly	66	55		12%
subassembly	BODY		43	95	Y	
GE FK contact rod assembly - #1	CONTACT	Silver/ Moly	49	48		14%
subassembly	BODY		35	99	Y	
GE FK - #2	CONTACT	65 / Silver	83	56		8%
subassembly	BODY		33F	100	Y	
GE FK moving contact assembly - #1	CONTACT	69	89	55		25%
subassembly	BODY		41	94		
GE FK AC moving plunger contact rod - #2	CONTACT	65	95	52		59%
subassembly	BODY		45	94	Y	

Note: There are two after market suppliers and the OEM in the contact evaluation.

REFERENCE
TEMPERATURE GAUGES

Created by: B. Ropson
Revised by: B. Ropson
Reviewed by: G. Samms
Approved by: G. Samms

MSR022-1: Temperature Gauge Settings

Oil Temperature Gauges

On transformers rated up to 7500kVA, these gauges usually have three normally open adjustable fan, alarm, and trip contacts set at 50°C, 85°C and 105°C respectively. For transformers rated at or above 7500kVA, the oil temperature gauge is usually equipped with two normally open adjustable alarm and trip contacts set at 90°C and 105°C respectively.

Winding Temperature Gauges

For transformers rated at or above 7500kVA only, these gauges usually have three normally open adjustable contacts; one set at 70°C for fan control, one set at 105°C for alarm, and one set at 120°C for tripping.

There are some instances where switch settings are somewhat different than those stated above, especially for fan control. In such cases the Substation Asset Management Group should be contacted before any changes are made.

REFERENCE
DRYING PROCEDURES

Created by: B. Ropson
Revised by: B. Ropson
Reviewed by: G. Samms
Approved by: G. Samms

MSR023-1: Drying Procedure

The following procedure can be used to dry the regulator unit if it has been exposed to moisture for an extended period of time:

1. Place nominal current on the unit and leave for 24 hours.

2. Filter the oil.

3. Repeat until dry.

Commercial Transformer

Type VR-1™ Single-phase Step Voltage Regulators

INSTALLATION - OPERATION - MAINTENANCE

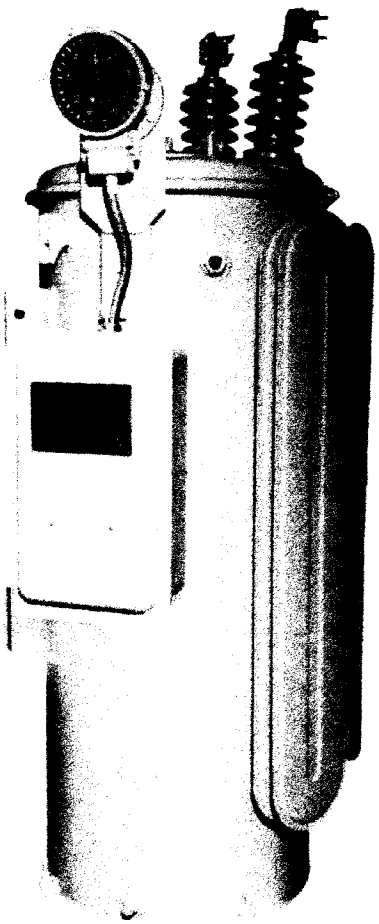

POLE TYPE

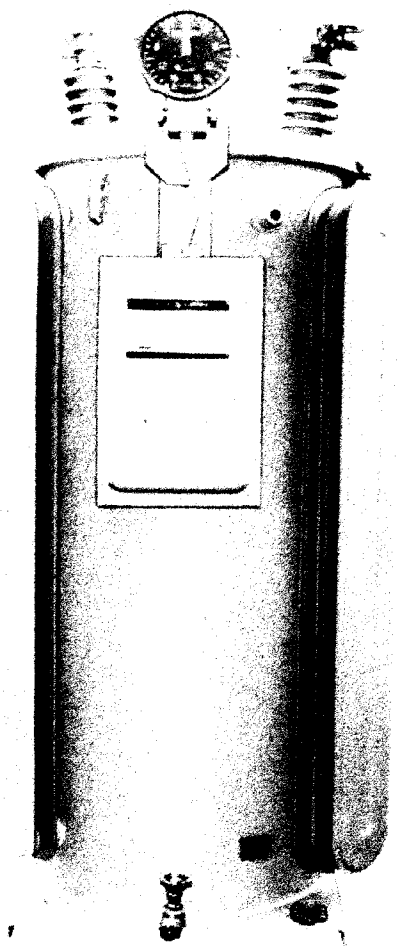

STATION TYPE

EH-5858

INSTRUCTIONS

GEH-5858

WARNINGS, CAUTIONS, AND NOTES AS USED IN THIS PUBLICATION

WARNINGS

Warning notices are used in this publication to emphasize that hazardous voltages, currents, or other conditions that could cause personal injury exist in this equipment or may be associated with its use.

Warning notices are also used for situations in which inattention or lack of equipment knowledge could cause either personal injury or damage to equipment.

CAUTIONS

Caution notices are used for situations in which equipment might be damaged if care is not taken.

NOTES

Notes call attention to information that is especially significant to understanding and operating the equipment.

This document is based on information available at the time of its publication. While efforts have been made to ensure accuracy, the information contained herein does not cover all details or variations in hardware and software, nor does it provide for every possible contingency in connection with installation, operation, and maintenance. Features may be described herein that are not present in all hardware and software systems. GE Electrical Distribution & Control assumes no obligation of notice to holders of this document with respect to changes subsequently made.

GE Electrical Distribution & Control makes no representation or warranty, expressed, implied, or statutory, with respect to, and assumes no responsibility for the accuracy, completeness, sufficiency, or usefulness of the information contained herein. No warrantees of merchantability or fitness for purpose shall apply.

REFERENCES

For information on servicing and repairing the controls, refer to the appropriate manual listed below:

For details on the VR-1A voltage regulator control, refer to GEH-5859.

For details on the SM-3 voltage regulator control, refer to GEH-7291.

© Copyright 1998 GE Company
All Rights Reserved

CONTENTS

INTRODUCTION.....PAGE 5
RECEIVING..... 5
SHIPPING DAMAGE..... 5
STORING..... 5
WARRANTY..... 5

INSTALLATION..... 5
INSPECTING..... 5
General..... 5
Sealed Regulators..... 5
CHECKING REGULATOR CONTROL AND SETTINGS..... 7
EXCITING THE REGULATOR FROM AN EXTERNAL SUPPLY..... 8
MOUNTING..... 8
SURGE PROTECTION..... 8
POWER CONNECTIONS..... 9
CONNECTING INTO SERVICE..... 9
REMOVING FROM SERVICE..... 10

APPLICATION
THREE PHASE CONNECTIONS..... 10
SHORT CIRCUIT RATING..... 10
OVERLOADING REGULATORS..... 10
TEST FOR PHASE SEQUENCE..... 12
REGULATOR FOR GROUNDED Y CIRCUITS..... 13
OTHER THAN RATED VOLTAGE..... 13

OPERATION..... 14
CONTROL INTERFACE & POWER DISCONNECT..... 14
LOAD BONUS FEATURE..... 15
REMOVING THE INDICATOR-DIAL ASSEMBLY..... 15

MAINTENANCE..... 16
INSPECTING..... 16
UNTANKING..... 16
REPLACING THE INTERNAL CLAMP BUSHING..... 17
CONTACT INSPECTION..... 18
CONTACT LIFE CHART..... 19

TROUBLE SHOOTING..... 20
CONTROL INTERFACE TEST POINTS..... 22
TYPICAL DIAGRAMS..... 23

PARTS LIST..... 25

List of Figures & Tables

Figure 1.	External views of type VR-1 voltage regulator	6
Figure 2.	Typical single phase installation	8
Figure 3.	Typical three-phase installation	9
Figure 4.	GE distribution surge arrestor	9
Figure 5.	Regulator connections	11
Figure 6.	Regulator winding configurations	12
Figure 7.	Potential transformer terminal board hand-hole view	13
Figure 8.	Control interface	14
Figure 9.	Control power disconnect	14
Figure 10.	Load-bonus position indicator	15
Figure 11.	Untanking type VR-1 step voltage regulator	16
Figure 12.	Contact wear	18
Figure 13.	Control power disconnect signals & pin identification	22
Figure 14.	Diagram - Control interface	23
Figure 15.	Diagram - Regulator	24
Figure 16.	Regulator , side, external	26
Figure 17.	Regulator, untanked	26
Figure 18.	Load-bonus position indicator	26
Figure 19.	Regulator, untanked	27
Figure 20.	Regulator, untanked	27
Figure 21.	High current switching mechanism	28
Figure 22.	High current switching mechanism	28
Figure 23.	Mid current switching mechanism	28
Figure 24.	Mid current switching mechanism	28
Figure 25.	Mid current switching mechanism	29
Figure 26.	High current switching mechanism	29
Figure 27.	Parts for switching mechanism	30

Table 1.	Surge arrestor clearances	8
Table 2.	Standard potential ratios	13
Table 3.	Untanking support bar diameters	17
Table 4.	Arconite dimensions on stationary contacts	18
Table 5.	Expected minimum number of operations	19

TYPE VR-1
SINGLE-PHASE STEP-VOLTAGE REGULATOR

INTRODUCTION

The General Electric Type VR-1 step voltage regulator (Fig. 1) is essentially a single-phase, regulating autotransformer. A tapped series winding and motor-operated, tap-selector switch afford dependable voltage regulation from 10 percent above to 10 percent below line voltage in thirty-two, 5/8 percent steps.

The regulator is automatically controlled by a static control which responds to changes in the system voltage to initiate the desired tap change.

To help maintain dependable service with a minimum of maintenance, read these instructions carefully before installing or operating your General Electric step voltage regulator.

RECEIVING

SHIPPING DAMAGE

Immediately upon receipt of the regulator, carefully examine the outside of the equipment to determine any damage or shortage that might have been incurred during transit. If injury or rough handling is evident, file damage claim with the transportation company immediately and notify the nearest General Electric Company Sales Office promptly.

STORING

If the regulator is not installed immediately, store in a clean, dry place

WARRANTY

Your General Electric regulator is warranted for one year against any defect in workmanship or material.

INSTALLATION

INSPECTING

General

Each regulator is shipped completely assembled and filled with the correct amount of oil. The switching mechanism is in the neutral position, and the voltage sensitivity is set for a normal voltage of 120 volts and a 1.5-volt bandwidth.

Carefully inspect the regulator, particularly the porcelain bushing. If there is any evidence or suspicion that moisture has entered the tank, dry the regulator and filter the oil before putting the unit in service. After drying, clean off any dirt or dust inside the tank with dry insulation oil under pressure. Avoid the use of cotton waste or similar material which might become caught in the mechanism.

Oil should be visible in the sight gage at all times.

WARNING:STATIC CHARGES CAN BE DEVELOPED WHEN OIL FLOWS IN PIPES, HOSES AND TANKS. OIL LEAVING A FILTER PRESS MAY BE CHARGED TO OVER FIFTY THOUSAND VOLTS. TO ACCELERATE DISSIPATION OF THE CHARGE IN THE OIL, GROUND THE FILTER PRESS, THE TANK AND ALL THE WINDINGS (IF ACCESSIBLE) DURING OIL FLOW INTO ANY TANK. CONDUCTION THROUGH OIL IS SLOW; THEREFORE, IT IS DESIRABLE TO MAINTAIN THESE GROUNDS FOR AT LEAST AN HOUR AFTER THE OIL FLOW HAS BEEN STOPPED. REMOVE EXPLOSIVE GAS MIXTURES FROM ANY CONTAINER INTO WHICH OIL IS FLOWING. ARCS CAN OCCUR FROM THE FREE SURFACE OF THE CHARGED OIL EVEN THOUGH THE PREVIOUS GROUNDING PRECAUTIONS HAVE BEEN TAKEN.

Sealed-tank Regulator

The sealed-tank regulator has a volume of gas, initially air, above the insulating liquid that is sealed from the atmosphere. There is normally no inward nor outward flow of air or moisture with temperature change, so that oxidation of the insulating liquid is held at a minimum. As a result, the dielectric strength of the insulating liquid is maintained at a high value over long period of operation.

WARNING: ALWAYS RELEASE ANY POSSIBLE PRESSURE OR VACUUM IN THE TANK (WHICH MAY ACCUMULATE DUE TO LOADING-CYCLE OR AMBIENT-TEMPERA-TURE CHANGE) BY OPENING MANUALLY THE PRESSURE-RELIEF DEVICE BEFORE ATTEMPTING TO REMOVE THE HANDHOLE COVER, UNTANK THE REGULATOR, OR TAKE AN OIL SAMPLE.

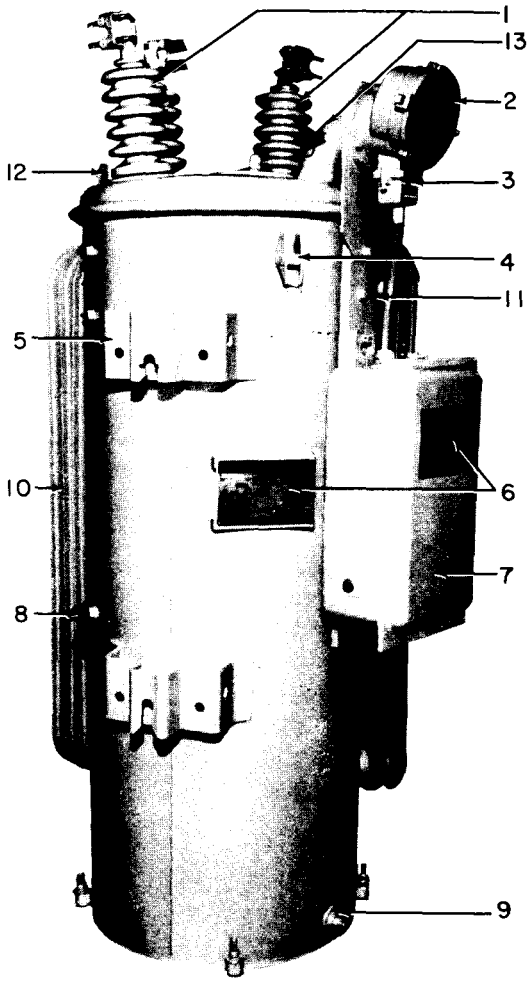

Pole Type

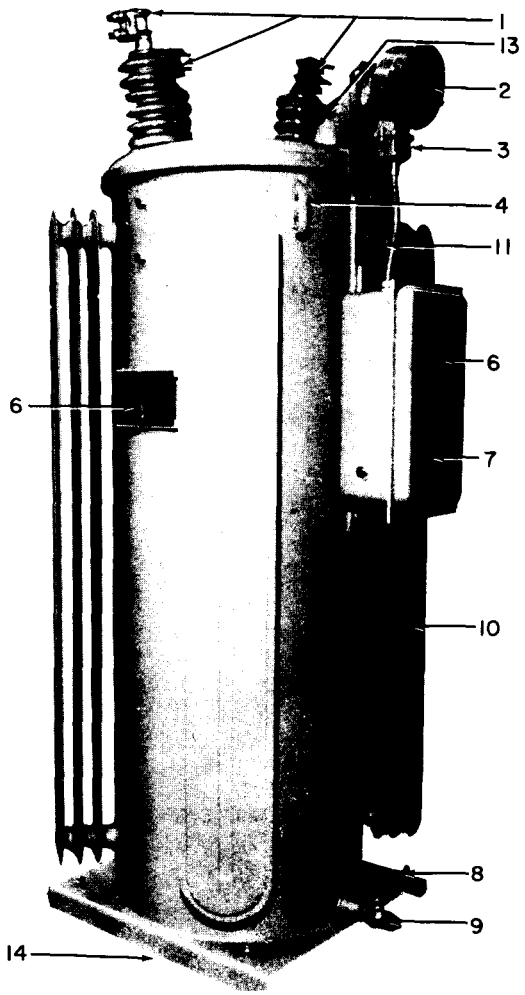

Station Type

1, Bushings
2. Load-Bonus position indicator
3. Control cable plug
4. Lifting lug for complete block
5. Suspension bracket
6. Nameplate
7. Control cabinet
8. Ground pad
9. Drain
10. Radiator
11. Minimum oil gage
12. Lifting eyes for cover and internal assembly
13. Pressure relief valve
14. Base

NOTE 1. The control cabinet is non-removable if the regulator is energized.
The control internal electronics is designed to be removed from the control cabinet for service. The power disconnect in the control cabinet automatically shorts the current transformer.
To remove the control cabinet:

1. De-energize the voltage regulator
2. Loosen the two captive screws fastening the cable housing to the bottom of the position indicator.
3. Squeeze the top of the ears on the connectors and gently pull then from the mating connector.
4. Loosen the cabinet mounting hardware and remove the control cabinet.

WARNING: Do not energize the voltage regulator unless the control cabinet and the current transformer shorting device in place.

Fig. 1. External views of Type VR-1 step voltage regulators

Check the oil level. Oil must always be visible in the oil sight gage since the gage is located at minimum oil level. To determine or adjust the 25 C oil level, remove the handhole cover (after relieving the tank pressure). The 25 C (77 F) level is indicated at the right of the handhole on the inside wall of the tank (looking at the control side of the regulator). Approximate oil level variations either side of the 77 F (25 C) line are 0.2 to 0.25 inches per 10 F change in oil temperature.

If the regulator has been in storage for a considerable length of time, the oil should be tested according to ASTM D-877, with flat disk electrodes, one inch in diameter, spaced 0.1 inch apart.

Filter the oil if the dielectric strength is less than 22 KV. The care of the oil and method of sampling and testing are given in another publication which will be furnished upon request.

CHECKING REGULATOR CONTROLS AND CONTROL SETTINGS PRIOR TO ENERGIZATION

WARNING: SHORT CIRCUIT AND GROUND THE HIGH-VOLTAGE TERMINAL OF THE REGULATOR AS A SAFEGUARD AGAINST DANGEROUS VOLTAGE FROM ACCIDENTAL EXCITATION OF THE HIGH-VOLTAGE WINDINGS.

VR-1A voltage control

See GEH-5859 for detailed control operation

The control knobs have a provision for locking, To unlock or lock these knobs adjust the screw located at the top of the adjustment knob..

1. Place the Control Mode switch to OFF
2. Move the Power Supply Switch to the position marked EXTERNAL. This automatically disconnects the internal power to the controls. Connect an external source of approximately 120-volts, 60-hertz power to the power terminal marked EXTERNAL.
3. Set the Line Drop Compensator (LDC) on/off switch to OFF, and set the resistance and reactance knob to zero.
4. Close the Control Power circuit breaker.
5. Turn the Control Mode switch to Test.
6. Adjust the level control knob to a lower voltage to cause the high band edge indicator to glow. After the time delays expires, the regulator should run toward lower.
7. After a couple of tap changes have occurred, adjust the level control knob to extinguish both band edge indicators.
8. Check the operation of the low band edge in the same manner except set the Voltage Level knob to a higher value.
9. Return the regulator to neutral and place the Control Mode switch to OFF.
10. Set the voltage sensitivity by turning the Bandwidth and Voltage Level knobs to the desired values of Voltage Level and Bandwidth.
11. If the voltage sensitivity is satisfactory, set the Line Drop Compensator.
12. Open the Control Power circuit breaker.

SM-3 voltage control

See GEH -7291 for detailed control operation

The control settings are programmed into Non volatile memory. The set points cannot be changed unless the program switch, located on the upper left hand side of the control, is pressed when the user is prompted by the display.

1. Place the Motor Control switch to Manual. Place the Raise / Lower switch to OFF.
2. Move the Power Supply Switch to the position marked EXTERNAL. This automatically disconnects the internal power to the controls. Connect an external source of approximately 120-volts, 60-hertz power to the power terminal marked EXTERNAL.
3. Program the Voltage Level set point lower to cause the high band edge indicator to glow. Place the Motor Control switch to Auto (+remote). After the time delays expires, the regulator should run towards lower.
4. After a couple of tap changes have occurred, program the voltage level to extinguish both band edge indicators.
5. Check the operation of the low band edge in the same manner except program a higher voltage level.
6. Using the Motor Control switch in manual and the Raise / Lower switch return the regulator to neutral and place the Raise / Lower switch to OFF.
7. Program the control as desired.
8. Place the Internal / Off / External switch to OFF.

EXCITING THE REGULATOR HIGH VOLTAGE WINDINGS FROM AN EXTERNAL SUPPLY

If it is desired to test the regulator, internally in all positions with an external high voltage power supply, an exciting transformer of suitable size should be used. When a transformer of too low a KVA rating is used, a noticeable voltage drop may occur in the supply circuit for odd-numbered positions of the regulator. This is caused by the additional exciting current required to excite the reactor in the bridging position. This voltage drop does not indicate any fault within the regulator. If a small exciting transformer must be used as a source of voltage, the correct ratio can be obtained by simultaneously reading the input and output voltage. For checking the voltage ratio, excite the S-SL bushing with 120-volts. Read the output on the L-SL. The exciting current at this level will not cause regulation of the supply.

MOUNTING

Mount the regulator on a pole or a platform. If the control cabinet is to be separately mounted, run control cable between the indicator plug and the control cabinet. A kit is available for mounting the control cabinet at the base of the pole. For information, consult the nearest General Electric Sales Office.

Regulators can be connected into a live circuit if suitable devices, as indicated in Fig. 5, are in the circuit. If they are not provided, de-energize the line before proceeding with the installation.

Thoroughly ground the regulator tank. If the control cabinet is mounted separately, ground it by means of cabinet ground stud.

Connect the bushing terminals to the line in accordance with the applicable arrangement in Figs. 2 and 3. Allow sufficient flexibility in the lead connections to prevent mechanical strains, due to expansions or contractions, which might break the porcelain.

SURGE PROTECTION

General Electric Distribution surge arresters (Fig. 4) should be mounted on the source and load side of the regulator to provide the clearance values listed in Table 1. The chart indicates the minimum suggested strike clearance from the line clamp of the arrester to the nearest ground metal. For proper arrester rating, refer to NEMA-LAI-1965, Appendix A, "Selection of Arrester Rating".

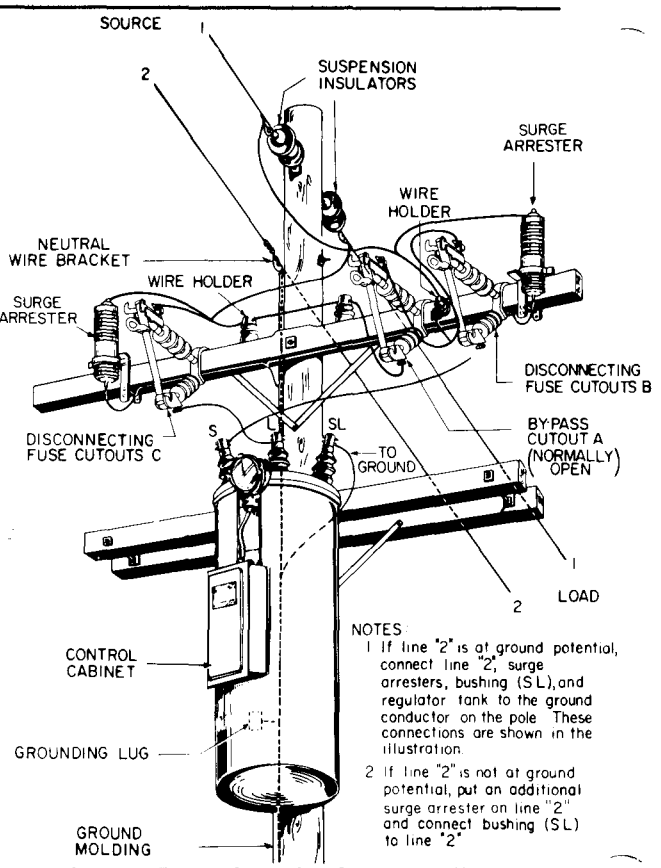

Fig. 2. Typical single-phase installation

TABLE 1
SURGE ARRESTER CLEARANCES

Regulator Voltage Class (KV-RMS)	Minimum Suggested Clearance (Inches)
2.5	4 (102 mm)
5.0	5 (127 mm)
7.62	6 (153 mm)
13.8	6 (153 mm)
14.4	9.5 (242 mm)
20.0	9.5 (242 mm)

Some installation requirements may necessitate inversion of the standard mounting brackets, which will increase the clearance where necessary.

The weld-nuts on the tank are spaced to accept either an EEI-NEMA bracket or a bracket for transformer-mounted arresters.

If the arresters are not mounted on the regulator, they should be installed within 10 feet (3.05 meters) of the regulator and the ground of the arrester should be connected directly to the ground lug of the regulator tank.

Additional protection against line surges is provided by ZENOX by-pass protectors which are mounted in the tank and connected in parallel with the series windings.

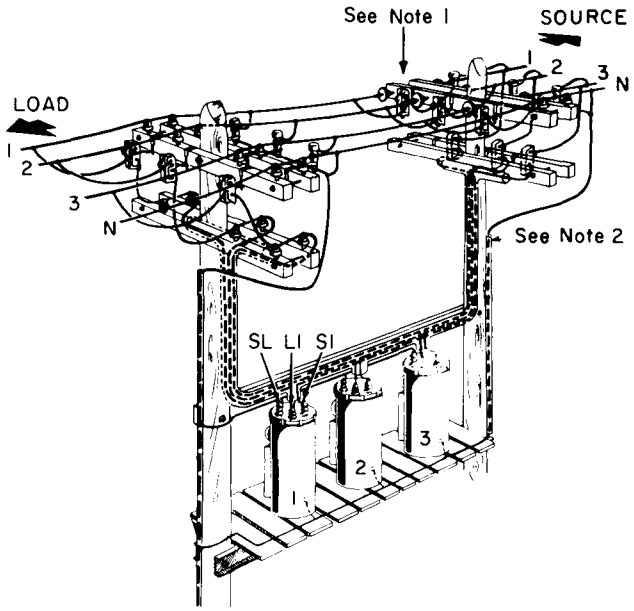

NOTES:
1. The three by-pass cutouts are mounted on the side of the crossarm toward the installation for clarity of illustration. Mount these by-pass cutouts on the opposite side of the crossarm with the same line connections as shown.
2. Tie surge arrester grounds together and connect to tank ground lug.

Fig. 3. Typical three-phase installation

Fig.4. GE distribution surge arrester

POWER CONNECTIONS

The Type VR-1 single-phase step voltage regulator may be connected in single or three-phase circuits in accordance with the connections shown in Fig. 5. For these connections, proper grounds, surge arresters and by-pass switching devices suitable for the line current are used. The regulator must also be on the neutral position. Before proceeding, the following precautions are necessary:

1. *THOROUGHLY AND EFFECTIVELY GROUND THE TANK. THE GROUNDING CONDUCTOR SIZE SHOULD BE IN ACCORDANCE WITH NEC REQUIREMENTS TO ELIMINATE THE POSSIBILITY OF BURNING-OFF THE GROUND CONDUCTOR IN CASE OF A LINE GROUND. DO NOT REMOVE THE GROUND WHILE THE REGULATOR IS ENERGIZED.*

2. *TO AVOID DAMAGE TO WINDINGS, THE BY-PASS SWITCH "A" MUST NEVER BE CLOSED WITH LOAD CURRENT FLOWING THROUGH THE REGULATOR UNLESS THE REGULATOR IS FIRST BROUGHT TO THE NEUTRAL POSITION AND THE CONTROL POWER TURNED OFF. IN CLOSED DELTA BANKS ALL THREE REGULATORS MUST BE OPERATED TO THE NEUTRAL POSITION AND THE CONTROL POWER TURNED OFF AND ALL UNITS BY-PASSED BEFORE REMOVAL OF ANY UNIT FROM SERVICE.*

3. *DEVICE "D" MUST ALWAYS BE **CLOSED FIRST** WHEN CONNECTING THE REGULATOR INTO SERVICE AND **OPENED LAST** WHEN REMOVING THE REGULATOR FROM SERVICE TO PREVENT POSSIBLE INJURY TO PERSONNEL OR DAMAGE TO THE REGULATOR DUE TO ABNORMAL VOLTAGE PEAKS.*

CONNECTING INTO SERVICE

NOTE: *If your regulator is for a 24940-GRDY/14400 or 34500GRDT19920-volt circuit, read the instructions under section entitled "REGULATOR FOR GROUNDED-Y CIRCUITS" carefully before installing.*

WARNING: *Do not disconnect the control cable connections at the bottom of the position indicator unless the voltage regulator is de-energized. High voltage from open circuit current transformers can be present.*

WARNING: *Do not bypass the regulator unless the Neutral is verified by the Neutral indicator.*

The instructions for CONNECTING INTO SERVICE and REMOVING FROM SERVICE without interrupting the load are given in detail in the following paragraphs. Refer to the connection shown in Fig. 5.

1. By-pass Switch "A" in series with the line should be closed, and the Load "C" and "D" and Source "B" Disconnect Switches should be open.
2. Close Load (SL) Disconnect Switch "D" **first.**
3. Close Source (S) Disconnect Switch "B".

4.A VR-1A Control Instructions (see 4B for SM-3 control)

a Place the Power Supply Switch to INTERNAL (See Note 1, Fig. 5)

b. Close the Control Power Circuit Breaker (See Note 1).

c. Initiate the Control Switch to RAISE or LOWER to operate the regulator switch mechanism to NEUTRAL (position "0") as shown on the Position Indicator. The NEUTRAL position lamp mounted on the control panel will light (See Note 1). Return the Control Switch to the OFF position.

d. Open the Control Power Circuit Breaker.

4.B SM-3 Control Instructions (see 4A for VR-1A control)

a. Place the Power Supply Switch to INTERNAL (See Note 1, Fig. 5)

b. Place the Motor Control switch to manual.

c. Initiate the Control Switch to RAISE or LOWER to operate the regulator switch mechanism to NEUTRAL (position "0") as shown on the Position Indicator. The NEUTRAL position lamp mounted on the control panel will light (See Note 1). Return the Control Switch to the OFF position.

d. Place the Internal / External power switch to OFF.

5. Close Load Disconnect Switch "C".
6. Open By-pass Switch "A".
7. Visually check the voltage level, bandwidth and time-delay settings.
8. Visually check the Line Drop Compensation settings.
9. Place the Power Supply Switch to INTERNAL
10. Place the Motor Control Switch to AUTO (+remote).

REMOVING FROM SERVICE

1. Operate the regulator switch mechanism to NEUTRAL (position "0") as shown on the Position Indicator. The NEUTRAL position lamp mounted on the control panel will light. In closed delta banks, all three regulators must be moved to neutral position.
2. Turn the control power OFF,. In delta hook-ups, turn all controls OFF.
3. Close By-pass Switch "A". In delta banks, by-pass all three units.
4. Open Load Disconnect Switch "C" and then Open Source "B".
5. Open Disconnect Switch "D" **last.**

THREE-PHASE CONNECTIONS

The line connections for three-phase operations are shown in Fig. 5.

Note that Type VR-1 regulator cannot be operated in Y-connection with the bank-neutral isolated. **When these regulators are Y-connected, the neutral of the regulator bank must be effectively connected to the system neutral, preferably by the fourth wire.** Without this interconnection, Y-connection is hazardous, as the individual and independent voltage control of each phase can cause unequal turn ratios between phases, resulting in shifting of an isolated neutral with extreme distortion of phase voltages.

SHORT-CIRCUIT RATING

The impedance of a regulator is practically negligible for reducing short-circuit current. The impedance of the feeder up to the point at which the regulator is installed should be sufficient to limit the short-circuit current in the regulator to the value for which it is designed. It is recommended that feeder current-limiting reactors be installed on the feeder to keep the short-circuit curre within the required limits.

Short-circuit rating on any position is 40 times the rated current at $\pm$ 10 percent regulation for 0.8 seconds. For short-circuit duration above 0.8 seconds, the permissible short-circuit current is reduced to keep the product I^2t product constant. In this formula, I is the short-circuit current and it is the time in seconds. For instance, if the regulator is rated 2500 volts, 400 amperes, at $\pm$ 10 percent regulation, $I^2t = (400 \times 40)^2 \times 0.8 = 205 \times 10^6$. Then for a short-circuit duration of 2 seconds, $2I^2 = 205 \times 10^6$ and I = 10 100 amperes.

OVERLOADING REGULATORS

The regulator can be overloaded in accordance with the ANSI Guide for Loading Step Voltage Regulators, Appendix C57.95-1955.

Warning: Do not use any automatic circuit opening elements between the line and the SL bushing, such as: fuses, cutouts or circuit breakers. This connection should never be opened unless the regulator is in the neutral position. When the connection to the SL bushing is open, the regulator acts as a current transformer with the open circuit secondary. Dangerous voltages are induced in the series windings if any load current flows in the series winding.

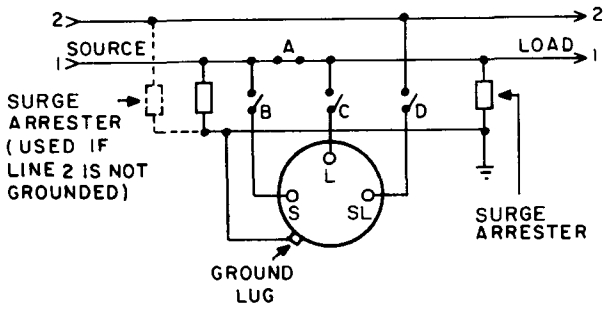

A. One regulator, single-phase circuit

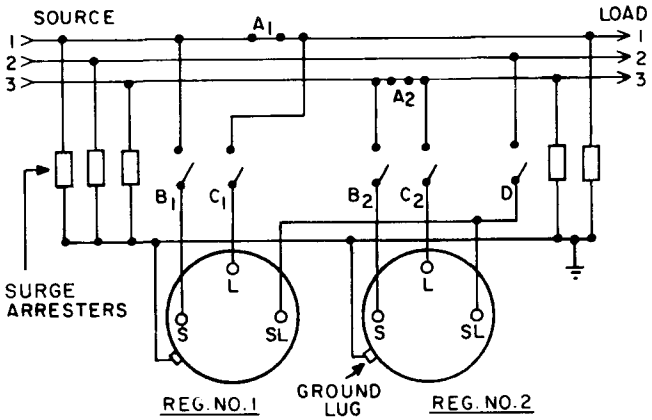

PHASE ROTATION	REG NO.	PHASE
1-2-3	1	LAG
	2	LEAD
3-2-1	1	LEAD
	2	LAG

B. Two regulators, 3-phase, 3-wire circuit

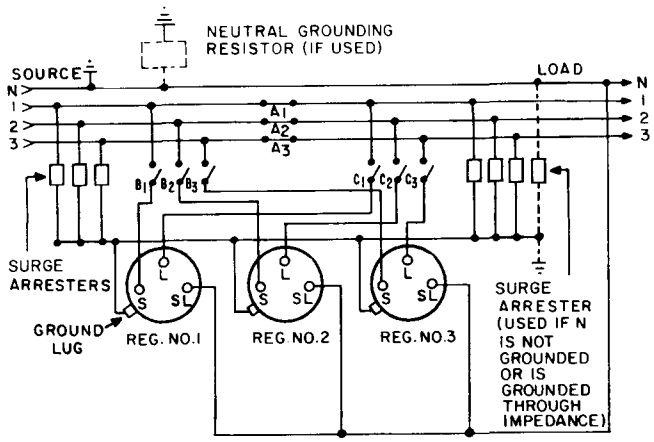

C. Three regulators, 3-phase, 4-wire circuit

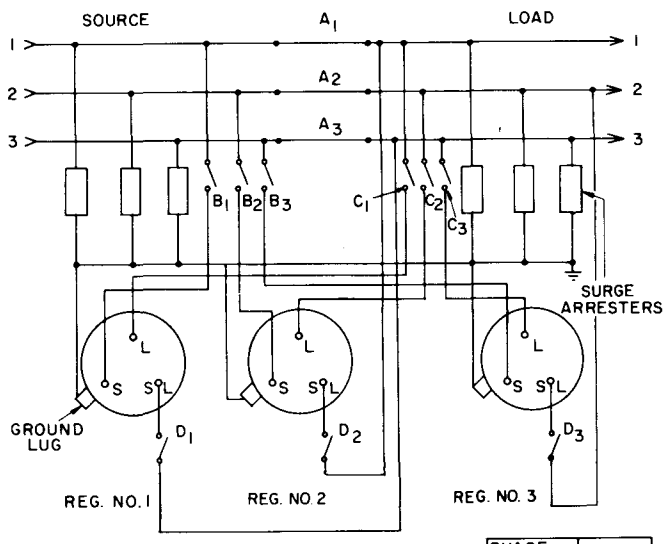

PHASE ROTATION	PHASE
1-2-3	LEAD
3-2-1	LAG

D. Three regulators, 3-phase, 3-wire circuit

NOTE 1

The control power On/Off function (not shown) are located on the regulator static control panel. Refer to the control instruction book for location of the switches detailed in the placing into service and removing from service procedures.

NOTE 2

By-pass switch "A" and disconnect switches "B"' "C", and "D" must be suitable for interrupting magnetizing current.

TEST FOR PHASE SEQUENCE

For a known system of phase rotation, the regulators carrying the leading of lagging currents can be determined as shown in Figs. 5B and 5D.

If the system phase sequence is not known, use the following method of obtaining the proper phase relationship. The test should be made when the regulators are carrying appreciable load.

For two regulators in an open delta system:

1. Connect the regulators for normal open delta operation. See Fig. 5B.
2. Set the control switch on "AUTO".
3. Set the resistance (R) and reactance (X) adjustments on the line drop compensators of both units to zero.
4. Set the Voltage Level on each unit at approximately 120 volts.
5. Set X on each regulator to 10 volts, leaving R on zer Place the LDC on/off switch to ON. Measure the output voltages of each regulator, after the mechanism has operated to bring the voltage control to a balance condition (both band and edge indicators OFF)
6. The regulator with the higher output voltage (nearer the maximum raise position as observed on the position indicator) is lagging phase; the other is on the leading phase.

For three single-phase regulators connected in a delta bank (Fig. 5D) carrying nearly balanced load and power factor of better than 80 percent, proceed with Steps 2,3,4, and 5, as described above.

If all of the three regulators raise their voltages, they carry lagging circuits. Otherwise, if all of the three regulators lower their voltages, they carry leading currents.

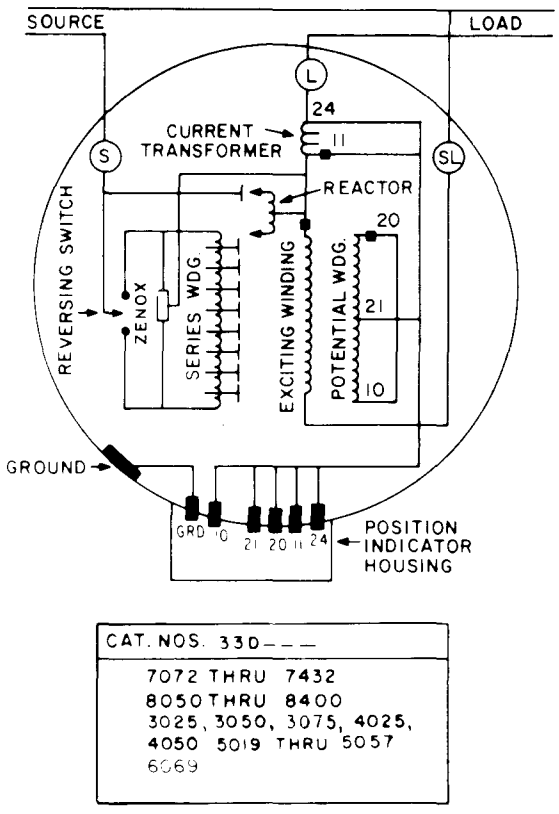

Fig. 6a. Schematic diagram showing connections of regulator for GRDY circuits

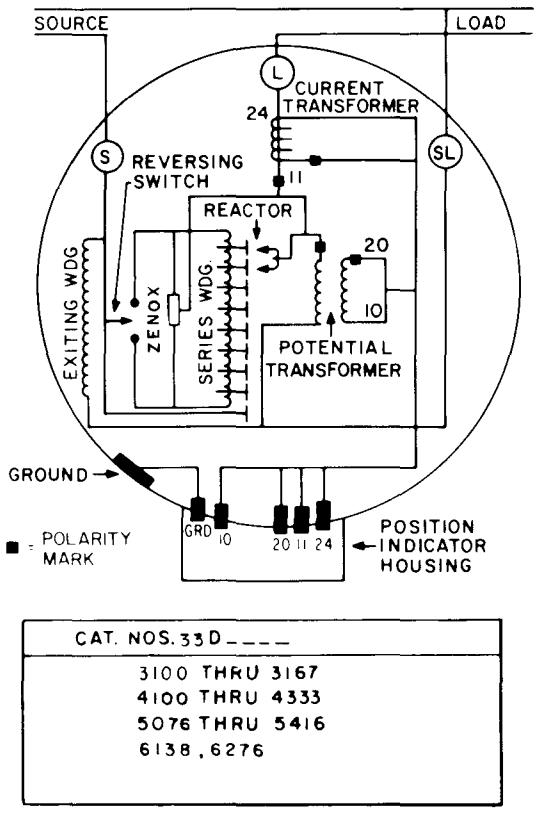

Fig. 6b. Schematic diagram showing single-core regulator

Fig. 6. Regulator winding arrangements

REGULATOR FOR GROUNDED-Y CIRCUITS

The step voltage regulator rated 19920/34500 volts is designed for use on 34500 grounded-y circuits. This regulator is designed with two 150-KV BIL class line bushings (S and L). The neutral is brought to a 95-KV BIL bushing (SL).

Regulators rated 14400/24940 volts are designed for use on either 14400 delta or 24940 grounded-Y circuits. A tap is provided for operation at 7200 volts delta or 12470 Y operation at reduced capacity. The current rating of the regulator must not be exceeded when operating at the lower voltages.

The regulator is designed with two 150-KV BIL line bushings (S and L) and a 95-KV BIL neutral bushing (SL).

When operating on a 25-KV or 34.5-KV circuit, the SL bushing must be solidly grounded or grounded through an impedance that will limit the low frequency and impulse from neutral to ground to 95-KV BIL.

OTHER THAN RATED VOLTAGE

All regulators, except those of the 19920-volt-rating, are provided with taps on the potential transformer for reduced-voltage operation. These taps make it possible to obtain the proper voltage for the control circuit. When operated at other than rated voltage, the regulator KVA must be reduced unless otherwise specified on the nameplate.

With the exception of certain operating voltages for 7620-volt regulators, all ratios of potential transformers may be changed by changing the connection of jumpers on the power disconnect circuit board located in the upper right hand corner of the control cabinet. Other connections are to be changed inside the regulator tank. For proper connections, see the regulator nameplate.

Table 2 lists the standard potential ratios.

TABLE 2
STANDARD POTENTIAL RATIOS

RATED VOLTAGES	OPERATING VOLTAGES	POTENTIAL RATIOS	VOLTAGE LEVELS OF VOLTAGE SENSORS
2500/4330Y	2500	20.8:1	120
	2400	20:1	120
5000/8660Y	5000	41.7:1	120
	4800	40:1	120
	2500	20.8:1	120
7620/13200Y	7960	66.3:1	120
	7620	63.5:1	120
	7200	60:1	120
	5000	47.7:1	120*
	4800	40:1	120*
	4330	36.1:1	120*
	4160	34.7:1	120*
	2500	20.8:1	120*
	2400	20:1	120*
13800	13800	115:1	120
	13200	110:1	120
	12000	100:1	120
14400/ 24940Y	14400	120:1	120
	7200	60:1	120
34500Y/ 19920	19920	166:1	120

*These taps are not provided on regulators rated less than 75 KVA.

When it becomes necessary to change potential transformer connections inside the tank, this can be accomplished by reaching through the handhole and changing the connection at the potential-transformer terminal board (See Fig. 7). The lead connection is of the quick-disconnect bayonet type, and reconnection can be easily made by pulling the lead off the terminal board terminal and pushing the lead receptacle onto the desired blade. The terminal board is clearly stamped to identify the potential transformer leads.

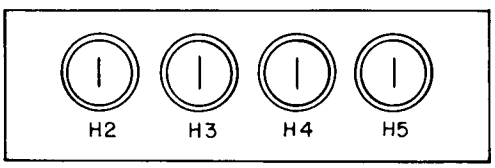

Fig.7. Potential transformer terminal board hand-hole opening view

OPERATION

Control Interface Instructions

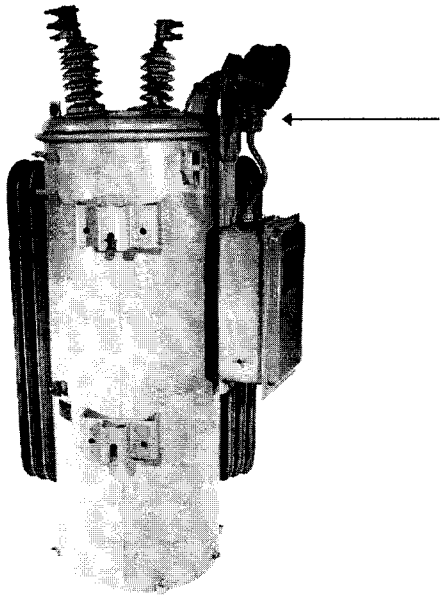

Fig 8 Control Interface

Operating Instructions

The control cabinet is designed to remain in place for service of the electronic control. A module in the control cabinet short circuits the current transformer when the control power disconnect is activated.

1. To de-energize electronic control, remove the circuit board from the power disconnect.
2. To remove the circuit board from the power disconnect operate the two circuit board ejection levers at the bottom of the circuit board.
3. Disconnect the two pin ground connector after the control is de-energized.
4. Reconnect the two pin ground connector before the power disconnect circuit board is re-inserted.

Note: The current transformer is automatically shorted by an electronic module located under the removable power disconnect circuit board.

CAUTION: Verify the jumper connections, consult nameplate, before installing a new power disconnect circuit board or if system voltage has been changed.

WARNING: High Voltage – Current Transformer circuitry.
Do not disconnect the electrical connections inside the housing at the bottom of the position indicator unless the voltage regulator is de-energized.

CAUTION: High Voltage – Current Transformer circuitry.
Do not energize the voltage regulator unless the control and the current transformer shorting device in the control are connected or the current transformer is short circuited by shorting the pins at the bottom of the position indicator.

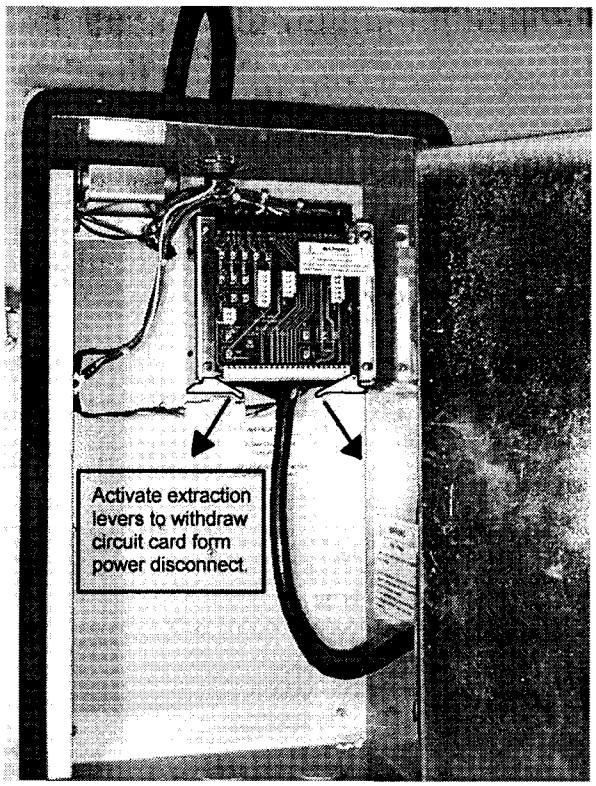

Fig 9 Control power disconnect

WARNING: Do not touch any components in the control cabinet unless they are de-energized. Operation of the power disconnect may not de-energize all components in the control cabinet.
De-energize the voltage regulator to de-energize all components in the control cabinet.
Consult the diagram for special configurations.

OPERATION

LOAD-BONUS FEATURE

The load-bonus feature provides a means of operating the regulator at increased load by decreasing the range of regulation in 1.25 percent steps. Load current may be increased up to 160 percent of rated current when operated at ± 5 percent regulation (with a limit of 668 amperes). Percentages of current ratings for various ranges of regulation are:

Range of Voltage (Percent)
10 8.75 7.5 6.26 5

Current Rating (Percent)
100 110 120 135 160

Refer to nameplate for current ratings at load-bonus settings.

To make adjustments, set the limit switches to the desired regulation range by lifting the knob and moving it to the desired setting (Fig. 10).

NOTE: *The regulator need not be de-energized when making regulation adjustments.*

To reset the drag hands on the load-bonus position indicator, press the drag-hand reset button on the lower left corner of the control panel. Drag hands will rest automatically.

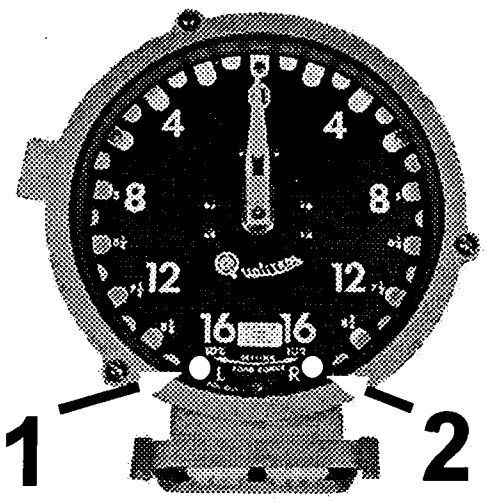

1.Limit switch adjusting knob (lower)
2.Limit switch adjusting know (raise)

Fig. 10. Load-bonus position indicator

REMOVING THE INDICATOR-DIAL ASSEMBLY

WARNING: *DEENERGIZE THE REGULATOR BEFORE REMOVING THE INDICATOR-DIAL ASSEMBLY FROM THE POSITION-INDICATOR HOUSING.*

With the regulator on "Neutral" loosen the three screws and open the indicator-glass assembly. Remove the three self-tapping screws located on the outside perimeter of the dial face. Carefully pull out the dial assembly which contains the pointer, drag-hand assemblies and limit switches. The operation counter switch and drag-hand solenoid will be exposed when the dial assembly is removed. To remove the dial assembly completely, remove the flag terminals from the limit switches and disconnect the leads to the solenoid.

After the dial assembly has been replaced, the indicator pointer should be centered on "0". To do this, attach one end of the flexible shaft to the indicator. Temporarily detach the bottom end of the flexible shaft from the mechanism. Rotate the flexible shaft to "zero-in" the pointer.

INSPECTING

At regular intervals. As determined by service, inspect the regulator to make sure it is operating properly and to detect and correct any trouble which may interfere with efficient service.

To check the operation, it is not necessary to untank the regulator. Run the regulator to its "Raise" and "Lower" limit positions by using the manual control switch to test limit switches.

By manual control, run the regulator in either direction a few steps, and then turn regulator back to AUTO to check the voltage sensor. After a time delay (30 seconds as set at the factory), the tap selector will operate and come to rest.

The devices in the control cabinet require very little maintenance.

If the electronic control panel is to be removed from the control cabinet for service the control panel should be De-energized by operating the power disconnect in the upper right hand corner of the control cabinet..

UNTANKING

WARNING: DE-ENERGIZE THE REGULATOR BEFORE UNTANKING

WARNING: ALWAYS RELEASE ANY POSSIBLE PRESSURE OR VACUUM IN THE TANK (WHICH MAY ACCUMULATE DUE TO LOADING-CYCLE OR AMBIENT-TEMPERATURE CHANGE) BY OPENING MANUALLY THE PRESSURE-RELIEF DEVICE BEFORE ATTEMPTING TO REMOVE THE HANDHOLE COVER, UNTANK THE REGULATOR OR TAKE AN OIL SAMPLE

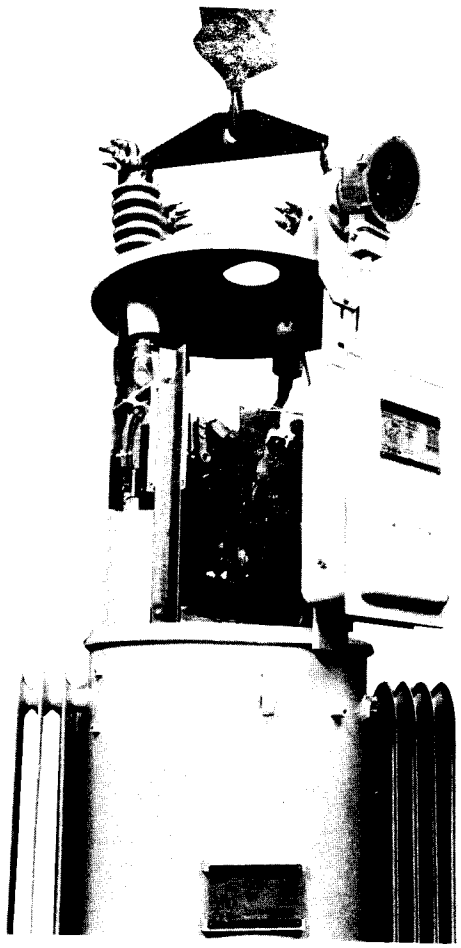

Fig. 11. Untanking Type VR-1 step voltage regulator, showing use of tank spreader bar when lifting regulator from tank.

CAUTION: EXPOSURE TO ATMOSPHERE IT IS OCCASIONALLY NECESSARY TO UNTANK REGULATORS FOR MAINTENACE. THE FOLLOWING RULES MUST BE APPLIED.

1. INTERNAL ASSEMBLIES MAY BE EXPOSED TO THE ATMOSHERE FOR A MAXIMUM OF EIGHT HOURS WITHOUT REQUIRING RE-BAKING.
2. INTERNAL ASSEMBLIES EXPOSED TO THE ATMOSHERE FOR MORE THAN EIGHT HOURS MUST BE RE-BAKED FOR A MINIMUM OF 14 HOURS AT 110 C.
3. AFTER REBAKING, RETURN THE INTERNAL ASSEMBLIES TO THE TANK, AND FLOOD THE TANK WITH OIL WITHIN TWO HOURS.
4. NO MORE THAN TWO RE-BAKES SHOULD BE ALLOWED IN ANY EVENT, AND TOTAL REBAK TIME AT 110 C SHOULD NEVER EXCEED 32 HOURS.
5. IF FACILITIES ARE AVAILABLE, IT IS RECOMMENDED THAT THE UNITS BE OIL-FILLED UNDER VACUUM.

To untank the regulator, proceed as follows:

1. Release the internal pressure using the pull-ring on the pressure relief and remove the cover band.
2. Remove the bolts holding the control housing support to the tank wall. They are located just below the control housing.
3. Lift the cover-suspended regulator from tank, using the lifting eyes on the top of the cover. The use of a spreader bar is recommended. See Fig. 11.

After untanking the regulator, the switch mechanism can be operated through the control circuit.

WARNING: BEFORE APPLING POWER TO OPERATE THE MECHANISM, SHORT-CIRCUIT AND GROUND THE BUSHINGS AS A SAFEGUARD AGAINST DANGEROUS VOLTAGES FROM ACCIDENTAL EXCITATION OF THE HIGH-VOLTAGE WINDINGS.

To operate the mechanism, move the Power Supply switch to the EXTERNAL position. (SM-3, place to OFF) This will disconnect automatically the internal power to the controls. Then connect an external power source of approximately 120 volts, 60 hertz to the EXTERNAL terminals. Close the Control power circuit breaker (SM-3, move Power supply switch to EXTERNAL). Operate the mechanism using the Motor Control Switch(s) in either the RAISE or LOWER position.

The minimum oil level is indicated in the oil sight gage.

When retanking the cover-suspended internal assembly, proceed as follows:

1. Rotate the assembly to the approximate tanking position by noting the location of the control housing hold down bolts.
2. After the internal assembly has been lowered into place, tap the cover with a rubber hammer around the edge to properly seal the gasket while tightening the cover band.
3. Bolt the control housing support to the tank wall.

A punch mark identified as the "25°C LEVEL" is located on the inside of the tank wall in the area of the L and SL bushings. The level at 25 C (77 F) can be observed through the handhole opening, from the indicator side, above the cover. Check the dielectric strength of the oil , and, if found to be 22 kv or below, filter the oil to restore the dielectric strength to 26 kv or more.

REPLACING THE INTERNAL CLAMP BUSHING

Release any internal pressure before removing the cover band and bottom control support bolts. Remove the bushing terminal cap. Lift the regulator internal-and-cover assembly (using the cover lifting eyes) approximately 18 inches.

As a safety measure for working under a suspended load, slide a round, steel bar through the large holes in the two upright angles. The bar length should be long enough to extend several inches beyond the tank rim. The suggested bar diameters are as follows:

TANK DIAMETERS (inches)	BAR DIAMETERS (inches)
19, 21	0.750
24, 25.5	0.875
28	1.00

Table 3 Untanking support bar diameters

Loosen the three screws on the holder and remove the garter spring. The porcelain can then be removed from the cover.

Replace the bushing porcelain, spring, and holder. Torque the screws to 25 - 45 in-lbs. Equalize the torque on all three screws.

CONTACT INSPECTION

Table 5 is given as a guide for inspecting the contacts of the regulator on the basis of minimum life. It should be used for the first inspection. It is recognized that many variables affect the contact life, such as load factor, overload, service, short circuit, etc.

Total contact life can be determined after this inspection on the basis of the amount of arcing material left in proportion to that which has been eroded.

Refer to the regulator nameplate for the rating; then determine the contact inspection point from Fig. 12.

On the same basis, other VR-1 regulators rated less than 100 KVA and not appearing in Table 5 can operate in excess of 1 million tap changes before inspection is required. This will be more than 25 years for normal service. Again the many variables that affect contact life must be considered.

The moving contacts and the tips of the stationary contacts are made of and arc-resistant material as shown in Sketch A, Fig. 12. Note Dimensions in Table 4.

Normal contact wear will produce a contact erosion such as shown in Sketch B, Fig. 12.

The contacts are satisfactory for service until either the stationary or moving contacts are worn to the condition as shown in Sketch C, Fig. 12, at which time the entire set of stationary and moving contacts must be replaced.

TABLE 4
ARCONITE DIMENSIONS IN INCHES (AND MILLIMETERS) ON STATIONARY CONTACTS

Reference Number R2033

SWITCH	T	L
LOW CURRENT	0.188 (4.8)	0.125 (3.2)
MID CURRENT	0.250 (6.4)	0.156 (4)
HIGH CURRENT	0.250 (6.4)	0.188 (4.8)
HIGH VOLTAGE	0.250 (6.4)	0.188 (4.8

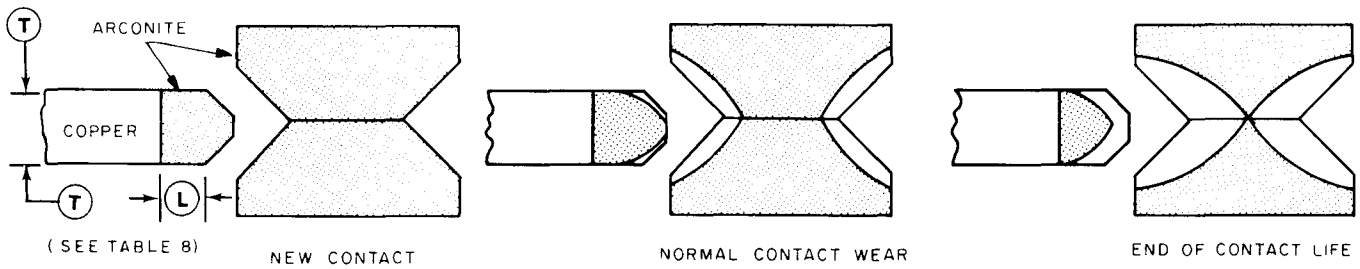

Sketch A Sketch B Sketch C

Fig.12. Contact wear (See Tables 4 and 5)

TABLE 5

EXPECTED MINIMUM NUMBER OF OPERATIONS
(USED AS A GUIDE FOR CONTACT REPLACEMENT ON BASIS OF CURRENT IN TABULATION BELOW)

KVA	VOLTS	AMP	LIFE	INSPECT	SWITCH SIZE
100	2500	400	1950000	1450000	HC
100	5000	200	2000000	1500000	MC
100	19920	50	2000000	1500000	HV
114.3	7620	150	600000	450000	LC
125	2500	500	1100000	840000	HC
125	5000	250	2000000	1500000	MC
138	13800	100	1250000	960000	LC
144	14400	100	2000000	1500000	HV
167	2500	668	620000	460000	HC
167	5000	334	1300000	1000000	HC
167	7620	219	1100000	830000	MC
200	19920	100	2000000	1500000	HV
207	13800	150	2000000	1500000	HC
250	5000	500	560000	420000	HC
250	7620	328	930000	700000	HC
276	13800	200	1350000	1000000	HC
288	14400	200	1100000	830000	HV
333	5000	668	310000	230000	HC
333	7620	437	550000	410000	HC
333	14400	230	740000	560000	HV
333	19920	167	1150000	870000	HV
400	19920	200	850000	640000	HV
414	138000	300	660000	490000	HC
416	7620	546	310000	230000	HC
416	14400	289	540000	410000	HV
432	14400	300	510000	380000	HV
500	14400	347	230000	170000	HV
509	7620	668	180000	130000	HC
576	14400	400	230000	170000	HV

The above table is compiled with reference to actual contact life tests of several selected ratings.

LC = Low Current Switch
MC = Mid Current Switch
HC = High Current Switch
HV = High Voltage Switch

On the same basis, other VR-1 regulators rated less than 100 KVA and not appearing in Table 5 can operate in excess of 1,000,000 tap changes before inspection is required. This will be more than 25 years for normal service. Again the many variables that affect contact life must be considered.

TROUBLESHOOTING

Besides the general precautions to be taken when troubleshooting electrical apparatus, there are also the following precautions which are particular to the static control.

WARNING: SINCE TROUBLE SHOOTING ENTAILS WORKING WITH ENERGIZED EQUIPMENT, CAUTION SHOULD BE TAKEN TO AVOID PERSONAL SHOCK.

WARNING: DISCHARGE CAPACITORS BY SHORT CIRCUITING TERMINALS OR LEADS BEFIRE RECONNECTING TO ANY CIRCUIT.

WARNING: BEFORE DISCONNECTING ANY PLUG CONNECTION IN THE CONTROL PANEL, DEENERGIZE THE CONTROL BY ACTIVATING THE POWER DISCONNECT CIRCUIT BOARD IN THE UPPER RIGHT HAND CORNER OF THE VOLTAGE CONTROL CABINET.

WARNING: DO NOT DISCONNECT THE CONTROL CABLE CONNECTIONS AT THE BOTTOM OF THE POSITION INDICATOR UNLESS THE VOLTAGE REGULATOR IS DE-ENERGIZED. HIGH VOLTAGE FROM OPEN CIRCUIT CURRENT TRANSFORMERS CAN BE PRESENT.

WARNING: IF AN EXTERNAL POWER SUPPLY IS USED FOR TESTING THE CONTROL, REMOVE THIS POWER SUPPLY BEFORE SWITCHING TO INTERNAL POWER SUPPLY.

WARNING: SHORT-CIRCUIT THE CURRENT TRANSFORMER SECONDARIES. IF LEFT OPEN-CIRCUITED, CURRENT TRANSFORMERS DEVELOP SECONDARY VOLTAGES HAZARDOUS TO PERSONNEL.

WARNING: DE-ENERGIZE THE REGULATOR BEFORE REMOVING THE POSITION-INDICATOR DIAL ASSEMBLY FROM THE POSITION INDICATOR HOUSING.

Within the chart, when necessary, these warnings are repeated to further emphasize their significance.

TROUBLE-SHOOTING CHART

TROUBLE	CAUSE	REMEDY
I. Regulator will not operate either automatically or manually or remains in maximum lower or maximum raise position.	1. Loss of sensing signal from the regulator.	1. Using an ac voltmeter check for control sensing voltage at the voltage test terminals. If no voltage occurs at this point, either the external power supply switch or the fault current limiter us defective. Check for sensing voltage at TB-1,3,4 or 5, and ground. If no voltage appears at these terminals, the problem is outside the controls. If voltage does appear at this point, check for faulty external power supply switch or a faulty circuit breaker.
	2. Motor circuit is not functioning properly or the control switch may be defective.	2. Place the Motor Control switch to Manual and place the Manual switch to Raise. Check the voltage on pin #12 of the power disconnect top connector. If approximately 120 vac is detected then the problem is most likely in the regulator motor circuit. See Fig #14 for further trouble shooting the regulator motor circuit.
	3. Indicator switches are not operating properly.	3. Check the position-indicator switch mechanism. Refer to MAINTENANCE section concerning removal of the indicator dial. WARNING: BEFORE REMOVING THE INDICATOR DIAL ASSEMBLE, DE-ENERGIZE THE REGULATOR.

TROUBLE-SHOOTING CHART

TROUBLE	CAUSE	REMEDY
II. Regulator functions manually but not automatically in either the raise or lower direction.	1. Defective Control	1. See control instruction book.
III. Regulator runs to maximum raise or maximum lower limit.	1. Control	1. See control instruction book.
IV. Regulator operates frequently.	1. Incorrect bandwidth 2. Time-delay setting is too low or the circuits are malfunctioning.	1. See control instruction book. 2. See control instruction book.
III. Regulator bucks when load increases.	1. Reversed polarity in either the current transformer or line drop compensation settings.	1. See control instruction book.
VI. Line drop compensator is not functioning in either reactance or resistance or both.	1. Shorting device on the power disconnect is shorted. 2. LDC in OFF position. 3. Defective current transformer.	1. Measure the voltage between pins # 18 & # 20 on the power disconnect. The voltage should be proportional to the load current and about 5 vac at full load current rating of the regulator. See Fig. # 13 for test points. 2. Set switch to ON position. 3. If all components in 1,2,3 and 4 are normal, but no compensation exists, a defective current transformer is the probable cause.
VIII. Motor does not operate	4. Motor of motor capacitor may be faulty.	1. Disconnect the two leads from the capacitor terminals, apply 240 volts, 60 hertz to the terminals. And read the current in the line. This reading should be approximately 0.36 amperes. **CAUTION:** DISCHARGE THE CAPACITOR BEFORE RECONNECTING THE LEADS. 2. Reconnect the capacitor, and apply 120 volts directly to the motor. Refer to control diagram for connections

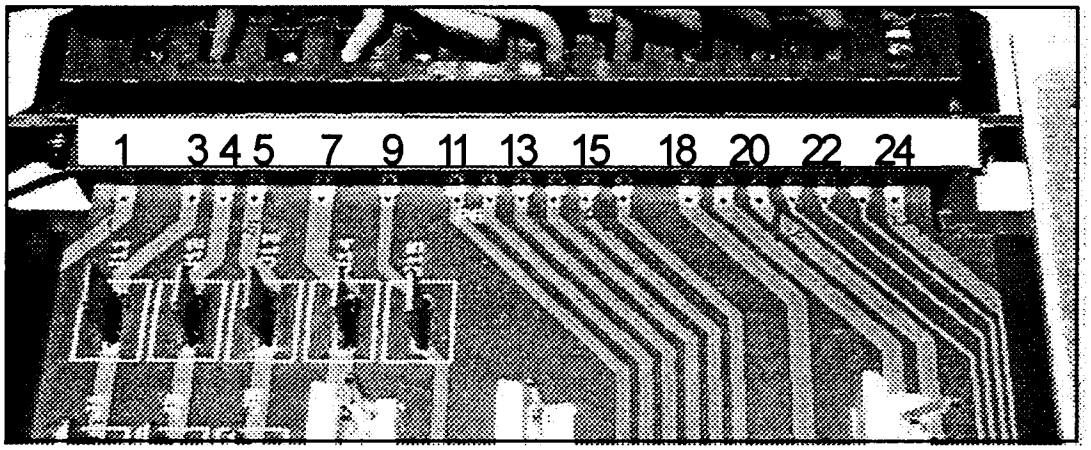

Power Disconnect pin number identification -- TB-1 and J6/P6 connectors

Pin #	Signal	Nominal value	Notes
1	Ground	0 vac	
2	No connection		
3	Potential signal #1	120 vac	1
4	Potential signal #2	120 vac	1
5	Potential signal #3	120 vac	1
6	No connection		
7	Ground	0 vac	
8	Spare		
9	Source voltage potential	0 to 240 vac	1
10	No connection		
11	Motor lower	0 vac (120 to 160 vac motor running)	2
12	Motor raise	0 vac (120 to 160 vac motor running)	2
13	Neutral switch	120 vac (0 vac at Neutral)	2
14	Operation counter switch	120 vac (0 vac when switch closed)	2
15	Drag hand reset signal	0 vac (120 vac when coil energized)	2
16	Motor common	0 vac	2
17	No connection		
18	Current transformer input	0 to .2 amperes = 0 to 5 vac	
19	No connection		
20	Ground	0 vac	
21	Position circuit supply	12 vdc	
22	Position signal	1 to 11 vdc	
23	Position circuit common	0 vdc	
24	Power circuit common	0 vac	

Note 1: Caution: The nominal values may deviate for special applications. Consult the nameplate and the diagram supplied for special circuits.

Note 2: Signal common depends upon the power supply for the control.

Power source	Internal Power	External Power
Signal common	Cabinet ground or motor common	Motor common

Figure 13
Control Power Disconnect signals & Pin identification

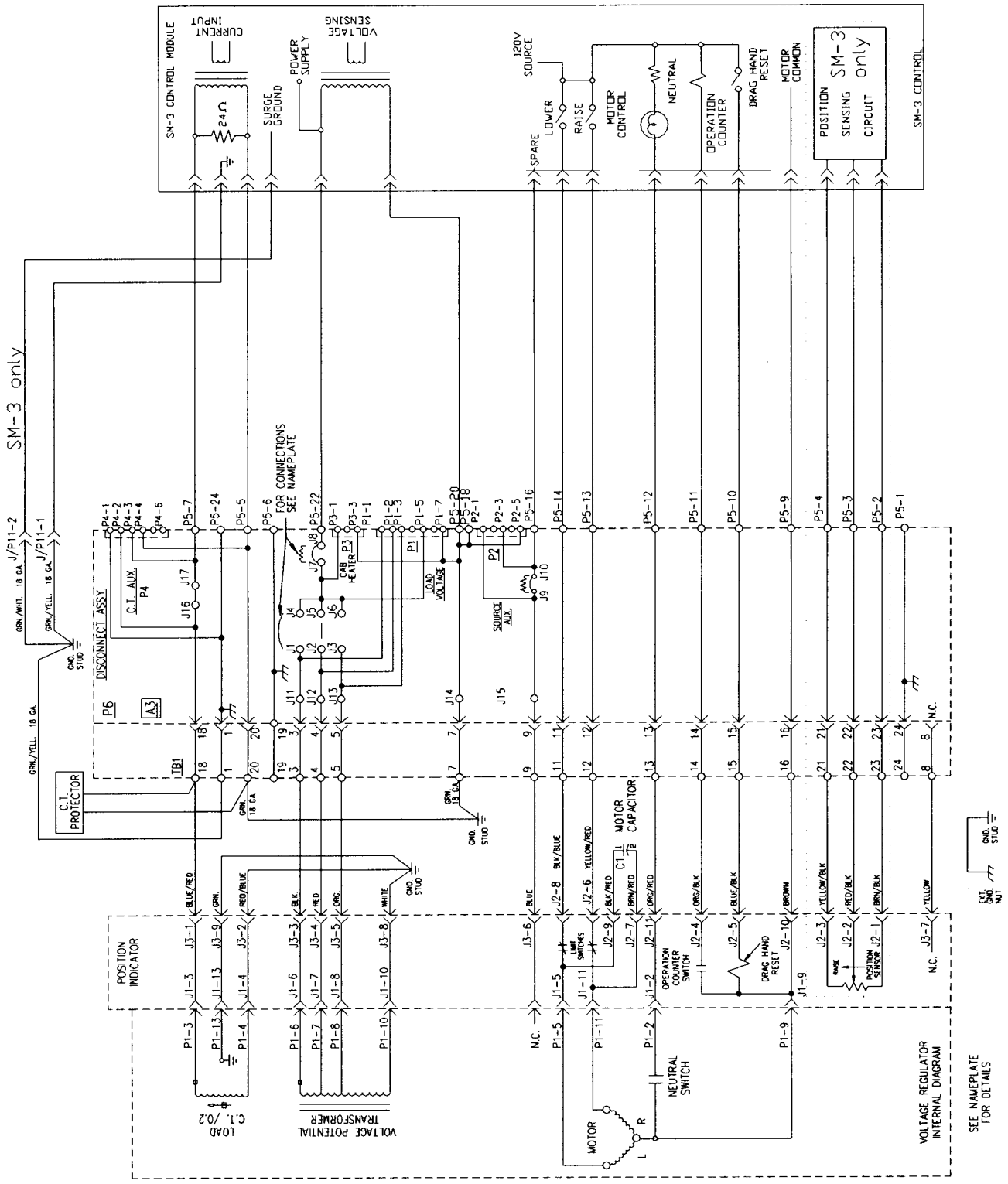

Figure 14
Typical Regulator/Control interface diagram

Type VR-1 Single Phase - Step Voltage Regulator

GEH-5858

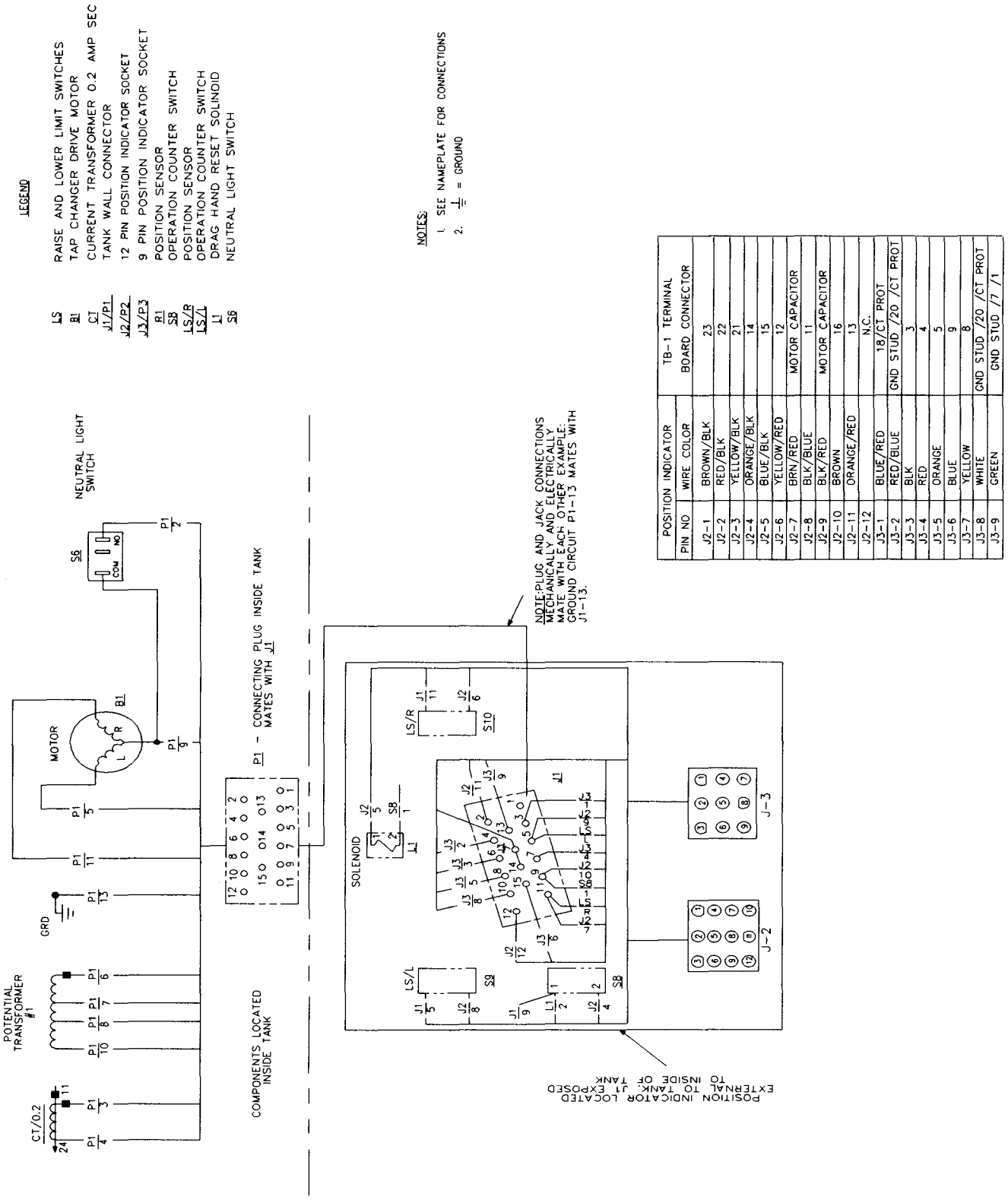

Typical Regulator Figure 15
Diagram

PARTS LIST

Furnish your nearest General Electric Sales Representative with ALL of the following information:

REGULATOR SERIAL NUMBER (found on the regulatory nameplate)

TYPE OF REGULATOR (All parts of this book are for type VR-1, single phase step voltage regulators of standard design.)

QUANTITY OF EACH PART REQUIRED

REFERENCE NUMBER OF EACH PART (as shown in this book)

DESCRIPTION OF EACH PART (as shown in this book)

The General Electric "Triple-R" Parts Service Program offers you extra-swift shipment of common replacement items. Regulator parts shown in this book having reference numbers prefixed by the letter "R" will be on their way within 48 hours of the receipt of your order at our factory.

For pricing information, refer to the General Electric Apparatus Handbook section entitled "Feeder Voltage Regulators," or contact your nearest General Electric Sales Representative.

NOTE: SHIPMENT OF PARTS NOT BEARING THE "R" PREFIX WILL BE DEPENDENT UPON THE AVAILABILITY OF THE PARTS REQUESTED. IN CASES WHERE "R" PARTS AND "NON-R" PARTS APPEAR ON THE SAME ORDER, YOU WILL RECEIVE TWO SHIPMENTS, UNLESS YOU SPECIFICALLY REQUEST THAT A SINGLE SHIPMENT BE MADE. SHOULD YOU REQUEST SINGLE SHIPMENT, ANY PARTS BEARING THE "R" PREFIX WILL NOT RECEIVE TRIPLE-R RAPID PARTS SERVICE.

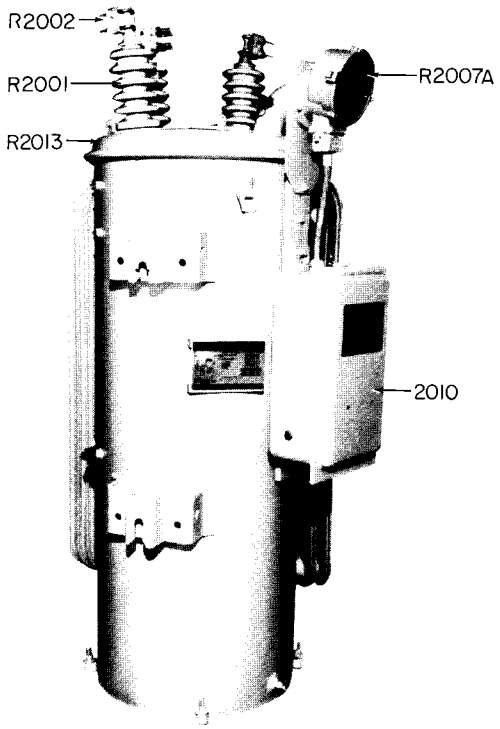

Fig. 16 Side, external

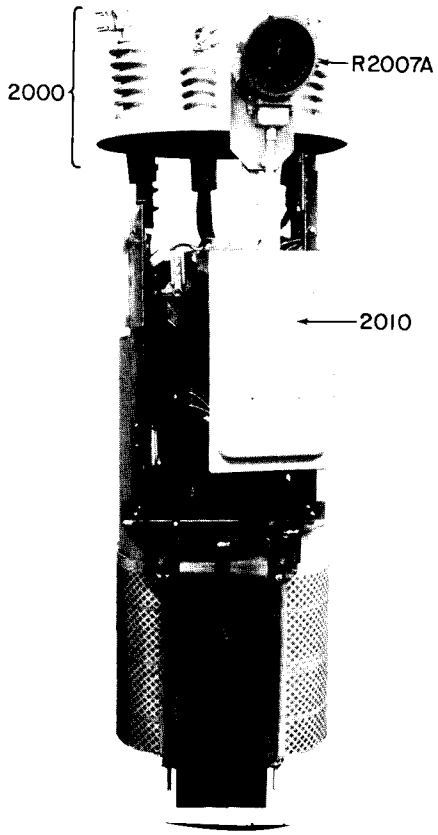

Fig 17 Front, untanked

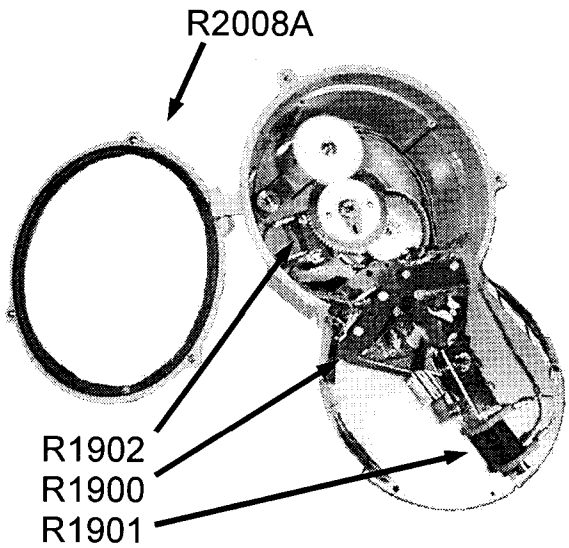

Fig. 18 Load-bonus position indicator

Fig. No.	Ref. No.	Description
17	2000	High voltage bushing assembly - compete.
16	R2001	Bushing porcelain
16	R2002	Bushing terminal
*	R2003	Bushing terminal gasket
*	R2004	Bushing gasket cover
*	R2005	Hand-hole gasket
*	R2006	Cover gasket
16-17	R2007A	Load-bonus position indicator
18	R2008A	Load-bonus indicator glass assembly kit
*	R2009	Indicator gasket
16-17	2010	Control-cabinet assembly
*	R2011	Sample plug
18	R2013	Cover band
18	R1900	Indicator dial and switch assembly
18	R1901	Solenoid
18	R1902	Counter switch

• Not illustrated

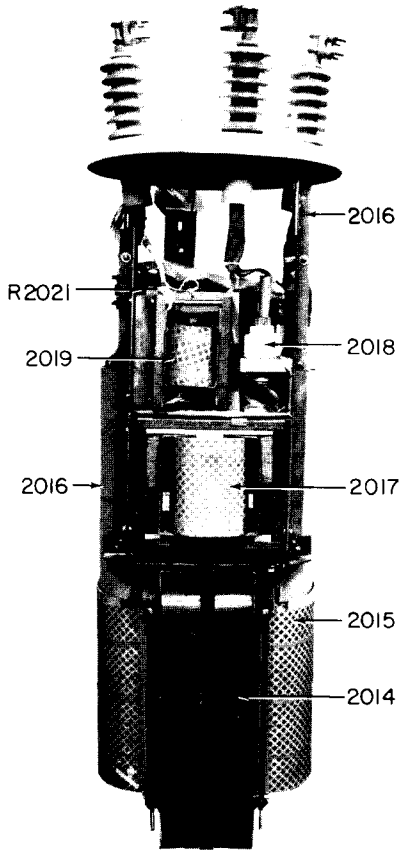

Fig. 19 Type VR-1, reactor side

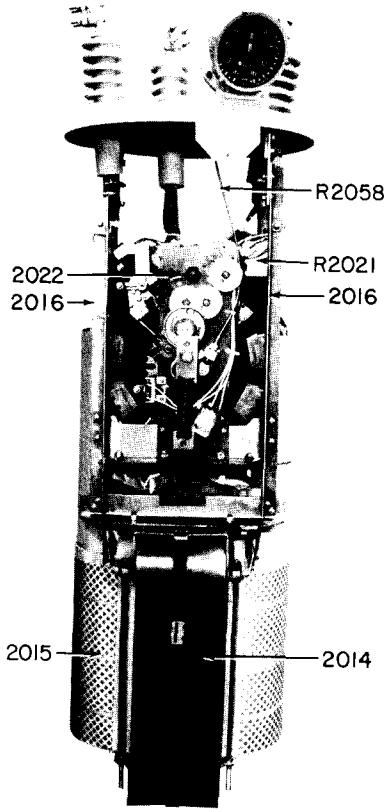

Fig. 20 Type VR-1, mechanism side with control cabinet removed.

Fig. No.	Ref. No.	Description
19-20	2014	Core
19-20	2015	Coil
19-20	2016	Clamps
19	2017	Reactor
19	2018	Current transformer
19	2019	Potential transformer
*	2020	ZENOX suurge bypass protector assembly
20	R2021	ZENOX disks
20	2022	Switch mechanism
20	R2058	Flexible shaft

* Not illustrated

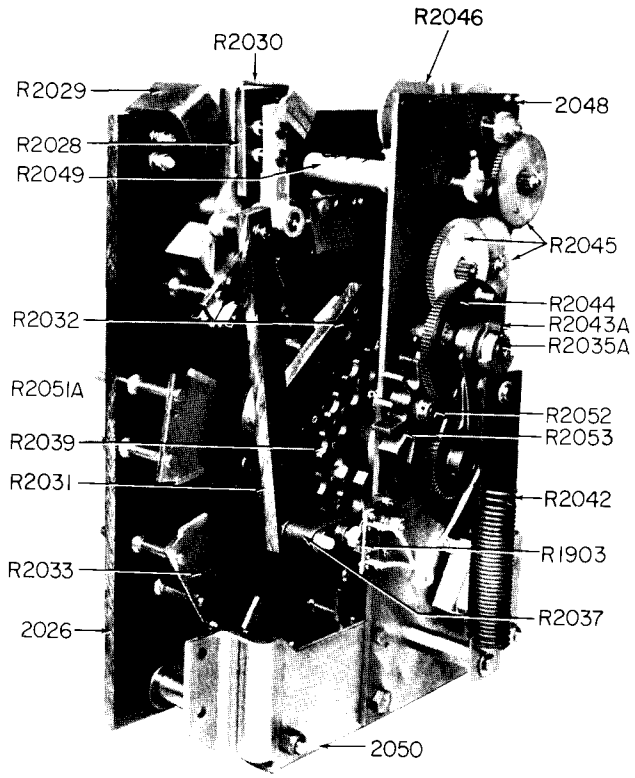

Fig. 21 High-current switching mechanism

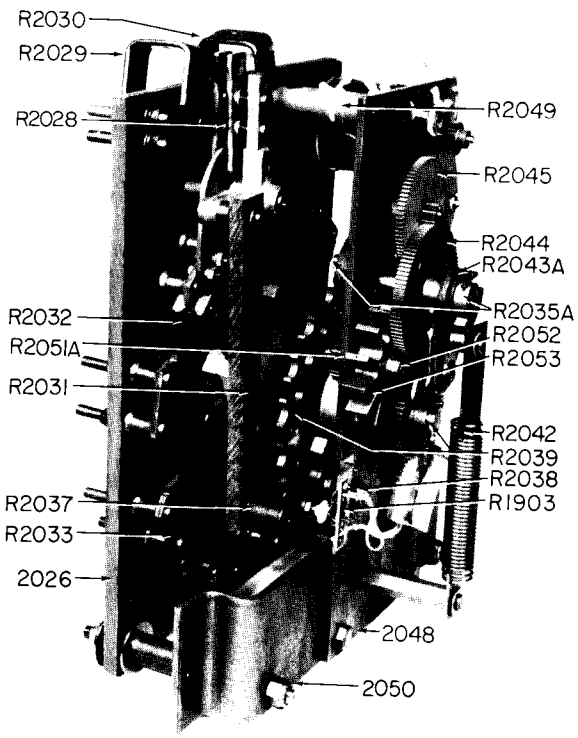

Fig. 23 Mid-current switching mechanism

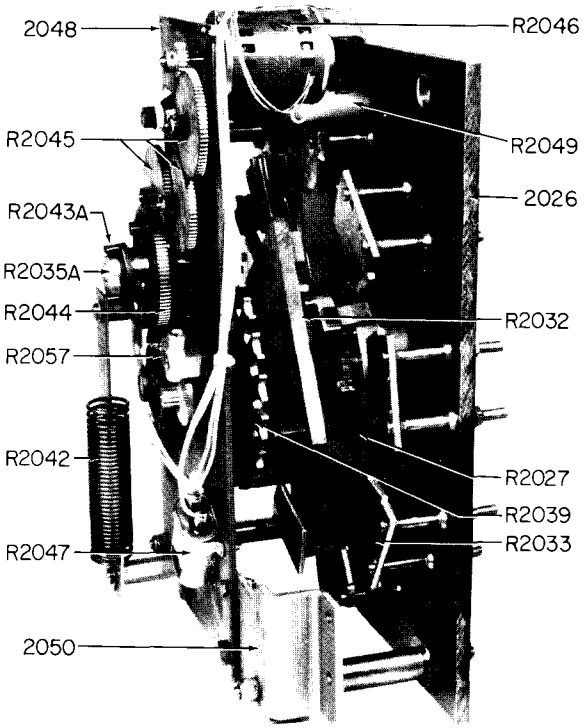

Fig. 22 High-current switching mechanism

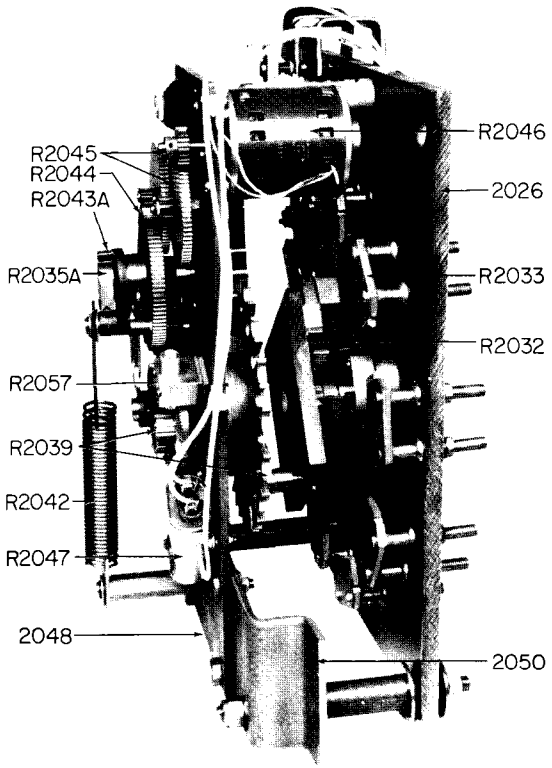

Fig. 24 Mid-current switching mechanism

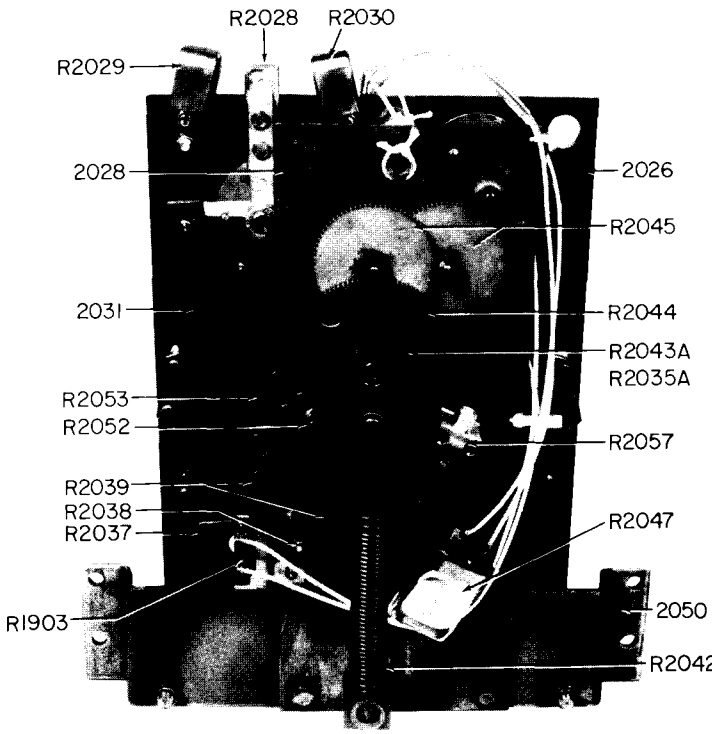

Fig. 25 Mid current switching mechanism

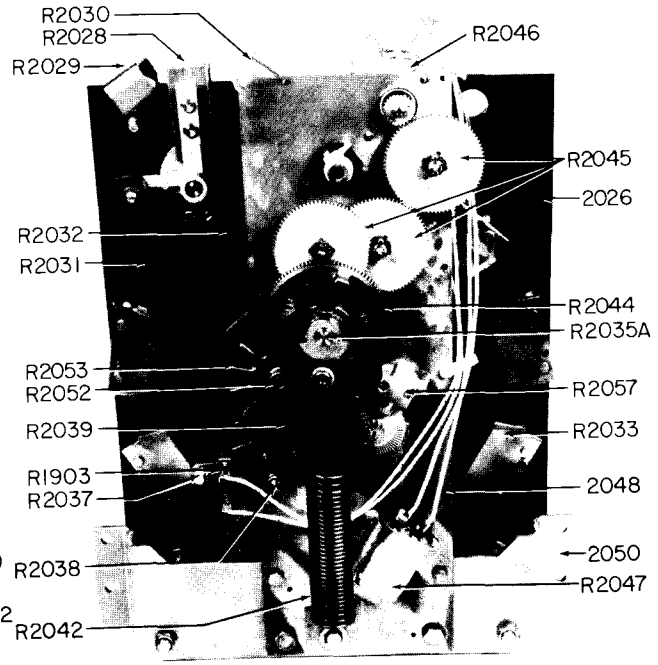

Fig. 26 High-current switching mechanism

Fig. No.	Ref. No.	Description
21-23-25-27	R1903	Neutral-light switch assembly
21-22-23-24-25-26-27	2026	Contact-panel assembly
22-27	R2027	Slip-ring assembly
21-23-25-26-27-	R2028	Reversing-switch moving-contact assembly
21-23-25-26-27-	R2029	Reversing-switch stationary-contact assembly (lower)
21-25-26-27-	R2030	Reversing-switch stationary-contact assembly (raise)
21-23-25-26-27-	R2031	Reversing-switch connector rod
21-22-23-24-27-	R2032	Moving contact assembly
21-22-23-24-26-27	R2033	Stationary contact assembly
27	R2034	Moving contact stud
21-22-23-24-25-26-27	R2035A	Crankshaft assembly
21-23-25-26-27	R2037	Geneva segment
23-25-26-27	R2038	Shaft for geneva segment
21-22-23-24-25-26-27	R2039	Geneva gear and shaft assembly
21-22-23-24-25-26-27	R2042	Spring assembly
21-22-23-24-25-27	R2043A	Driver and hook assembly
21-22-23-24-25-26-27	R2044	Gear
21-22-23-24-25-26-27	R2045	Gears (motor reduction)
21-22-24-26-27	R2046	Motor and pinion gear
22-24-25-26-27	R2047	Capacitor (may be located in control cabinet)
21-22-23-24-25-26-27	2048	Motor drive panel assembly
21-22-23	R2049	Spacer assembly
21-22-23-24-25-26-27	2050	Base
21-23-27	R2051A	Gear, shaft, impeller assembly
21-23-25-26-27	R2052	Shaft for impeller
21-23-25-26-27	R2053A	Impeller
22-24-25-26-27	R2057	Indicator miter-gear assembly
27	R2058	Flexible shaft

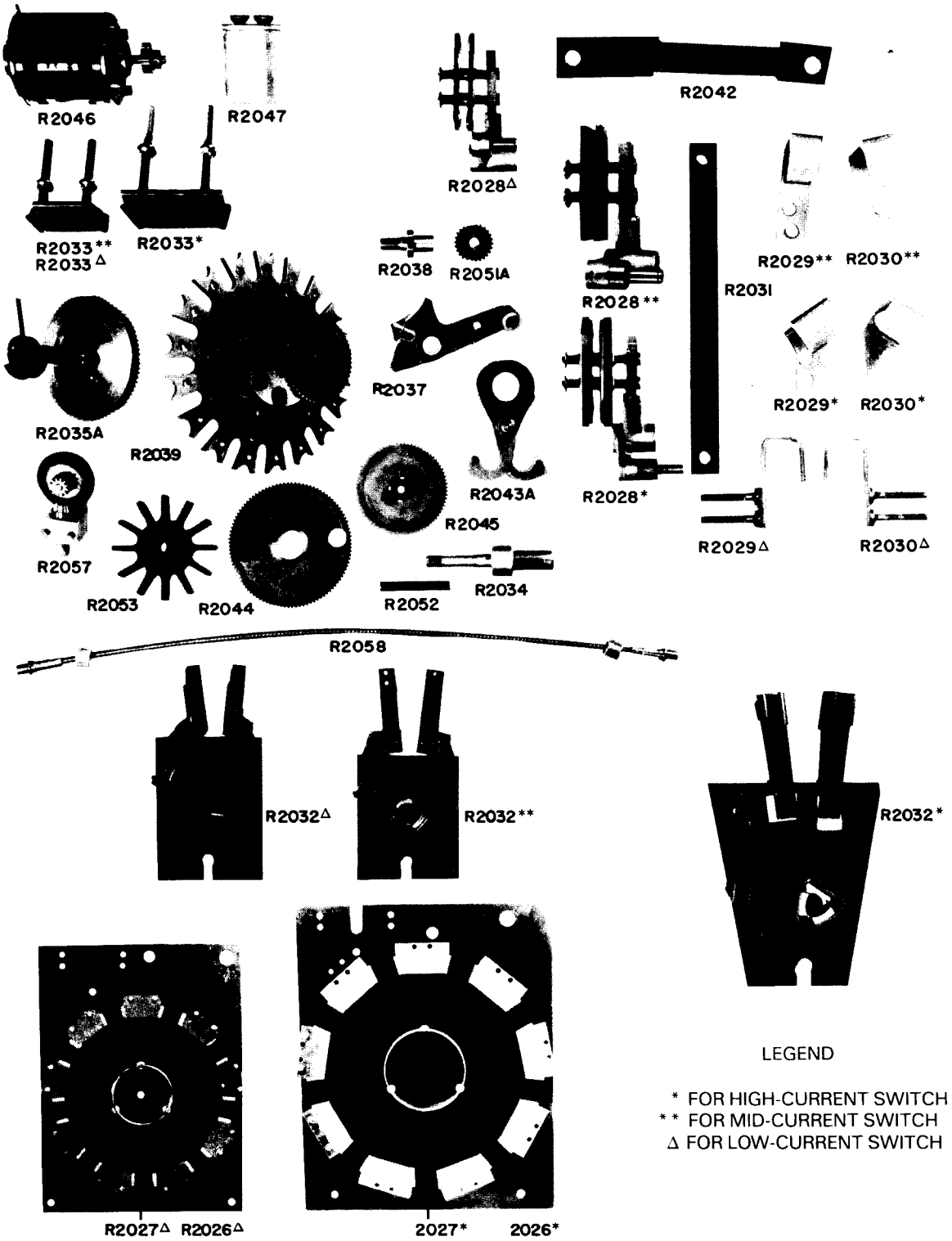

Fig. 27 Parts for switching mechanism Type VR-1 voltage regulator

Commercial Transformer

General Electric Company
7000 Bert Kouns Industrial Drive
Shreveport, LA 71129

GEH-5858 0398

© 1998 General Electric Company

REFERENCES
SWITCHING VR-32 AND CL-5 TO BI-DIRECTIONAL MODE

Created by: B. Chubbs
Revised by: B. Chubbs
Reviewed by: G. Samms
Approved by: G. Samms

Switching VR-32 Regulator and CL-5 Control Panel to Bi-Directional Mode

Setting Reverse-Mode Voltage
- Select Function 51: Set Voltage
- Enter the Desired Reference Voltage

Setting Reverse-Mode Bandwidth
- Select Function 52: Bandwidth
- Enter the Desired Bandwidth in Volts

Setting Reverse-Mode Time Delay
- Select Function 53: Time Delay
- Enter the Desired Time Delay in Seconds

Switching Regulator to Bi-Directional Mode
- Select Function 56 – Reverse Sensing Mode
- Enter 3 for Bi-Directional Mode

COOPER Power Systems

S225-40-1-A2
CRA Addendum

Required Control Function Settings for CRA:

The following function codes are to be programmed by the customer when installing Cooper Power Systems CRA on GE and Siemens Regulators.
For descriptions and ranges limits of the function codes See Control Manual S225-10-10 Pages 3-2 through 3-16 and the blue function code card supplies with each CRA.

Function Codes	Function	Values
FC 1	Set Voltage	*Customers value
FC2	Bandwidth	*Customer value
FC3	Time Delay	*Customer Value
FC39	Source Voltage Calculation	Only required when Reverse Sensing Mode Applications FC 39 = 0 (**Off**) FC 39 = 1 (**On**)
Sub Function 39	Regulator Type	Sub Function 39 = 1 (**Type A or Straight Design**) Sub Function 39 = 2 (**Type B or Inverted Design**)
FC 41	Regulator Configuration	0 = Wye, 1 = Delta Lag, 2 = Delta Lead
FC 42	Control Operating Modes	0 = Sequential, 1= Time Integrating, 2 = Voltage Averaging
FC 43	System Line Voltage	Per Nameplate
FC 44	Overall PT Ratio	Per Nameplate
FC 45	C.T. Primary Rating	Per Nameplate
FC 49	Tap Changer Selection	GE and Siemens FC 49 = 1.

Reverse Control Settings: Only required when using Function Code 56 Reverse Sensing Modes.

FC 51	Set Voltage	*Customer value
FC 52	Bandwidth	*Customer Value
FC 53	Time Delay	*Customer Value
FC 69	Blocking Status	FC 69 = 0 (**Off**) will operate in Automatic FC 69 = 1 (**On**) will not operate in Automatic

***Note:** See Manual S225-10-10 for range of low and high limits

Voltage Regulators

COOPER Power Systems

Electrical Apparatus

225-10

Single-Phase Step

GENERAL

McGraw-Edison® VR-32 single-phase step voltage regulators are tap-changing autotransformers. They regulate distribution line voltages from 10% raise (boost) to 10% lower (buck) in thirty-two steps of approximately 5/8% each. Voltage ratings are available from 2400 volts (60 kV BIL) to 34,500 volts (200 kV BIL) for 60 Hz and 50 Hz systems.

Internal potential winding taps and an external ratio correction transformer are provided on all ratings so that each regulator may be applied to more than one system voltage.

Smaller kVA sizes are supplied with support lugs for pole mounting and with substation or platform tie down provisions. Larger sizes are provided with substation bases with pad-mounting provisions.

Voltage is maintained within desired limits by controls that feature superior accuracy, reliability, and serviceability. Continuity of service is assured by rugged, service-proven tap changers and core-and-coil assemblies functioning with the control.

McGraw-Edison voltage regulators are available with a full complement of standard features for routine applications, as well as a full line of optional accessories for unique applications. In addition, the regulator offers desirable features that enhance operation and service.

STANDARD FEATURES

A sealed-tank construction allows the use of 65°C rise insulation system in 55°C rise rated designs to provide an additional 12% capacity above the nameplate rating without loss of normal insulation life. Additional load capacity is stated on the nameplate, this ADD-AMP™ feature is available as long as the tap changer's maximum current rating is not exceeded.

The unit construction cover suspends the internal assembly consisting of the core-and-coil assembly, tap changer, and the reactor for ease of inspection and maintenance.

Figure 1.
VR-32 Voltage Regulator with CL-5C control.

All McGraw-Edison regulators are manufactured and tested to the ANSI Standard C57.15.

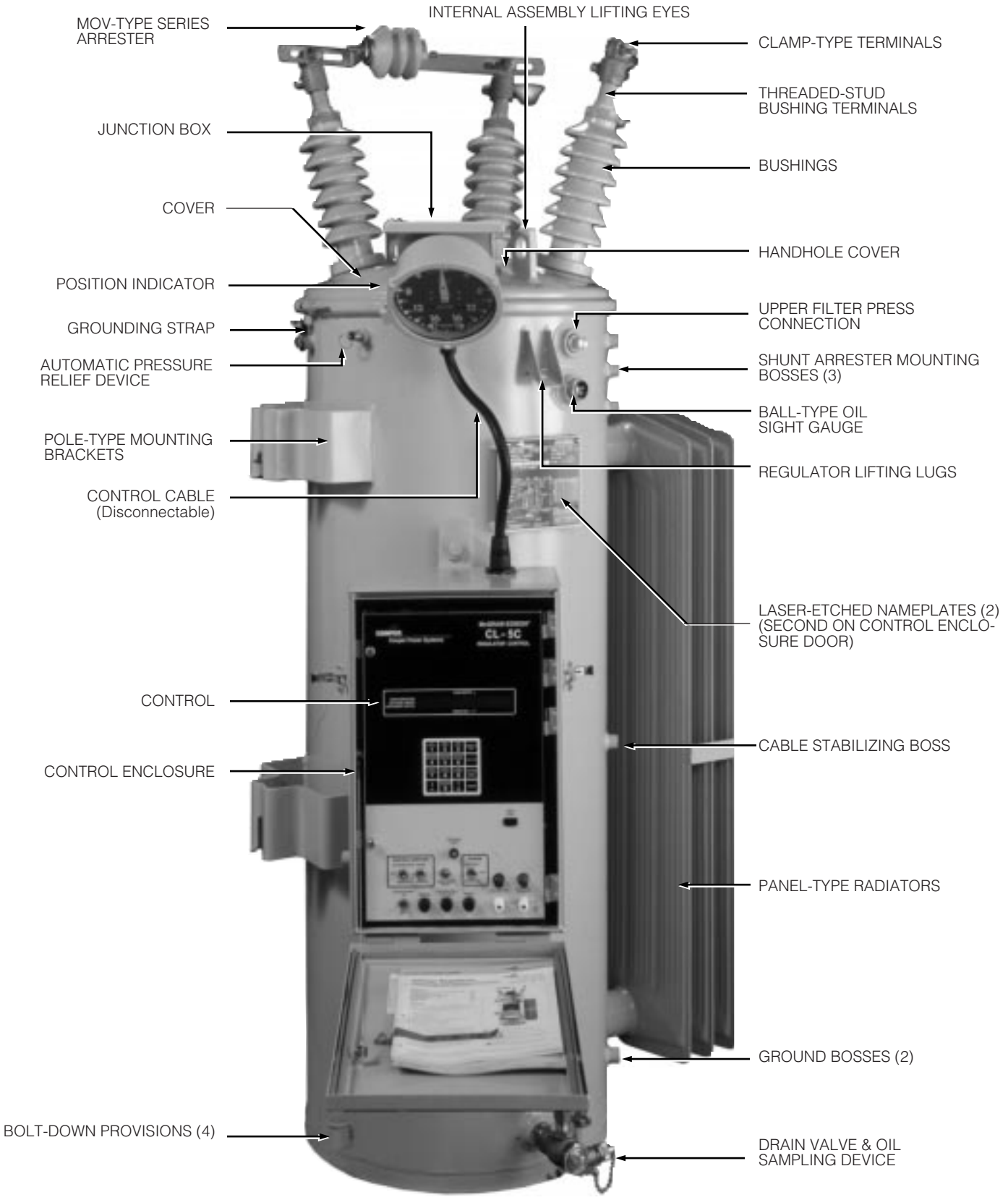

Figure 2.
VR-32 Voltage Regulator.

STANDARD FEATURES

- CL-2A control
- Tap changer with motor and power supply
- Position indicator with ADD-AMP adjustment
- Two laser-etched nameplates
- Lifting lugs
- Oil drain valve and sampling device
- Upper filter press connection
- Oil sight gauge
- Mounting provisions for shunt arresters
- High-creep bushings with clamp-type terminals
- Bolt-down provisions (overhead units)
- Pole-type mounting brackets (overhead units)
- Substation base (substation units)
- External series arrester
- Automatic pressure relief device
- Handhole
- Control cabinet with removable front panel
- Ratio correction transformer
- Conformally coated circuit boards

OPTIONAL ACCESSORIES

- Shunt arresters
- Extra-length control cables
- Elevating structure
- Control heater
- 4-hole NEMA H-spades
- Cooling fans
- Data reader
- Nameplates in alternate languages or metric units
- 240 volt external source
- Internal differential potential transformer for complete reverse power flow w/metering (requires CL-5C control)
- CL-5C control (optional accessories for control listed below)
  - SCADA relay
  - Fiber optic interface board (for digital communication)
  - CL-Interface program

ARRESTERS

Series Surge Arresters

All VR-32 Voltage Regulators are equipped with a bypass arrester connected across the series winding between the source (S) and load (L) bushings. This bypass arrester limits the voltage developed across the series winding during lightning strikes, switching surges and line faults. A MOV type series surge arrester of 3 kV offers series winding protection on all regulators except those rated 33000 V, which have a 6 kV MOV-type series surge arrester.

Shunt Arresters

A shunt arrester is an optional accessory on the VR-32 Voltage Regulator for protection of the shunt winding. The shunt arrester is a direct connected arrester mounted on the tank and is connected between the load bushing and ground. For additional protection, a shunt arrester may also be installed between the source bushing and ground. Shunt arrester application data is listed in Table 1.

TABLE 1
Shunt Arrester Application Data

Regulator Voltage Rating	Nominal System Voltages (volts)		Recommended MOV Shunt Arrester Ratings (kV)
	Delta or Single-phase	Multi-grounded Wye	
2500/4330Y	2400 2500	2400/4160 2500/4300	3
5000/8660Y	4160 4330 4800 5000	4160/7200 4330/7500 4800/8320 5000/8660	6
7620/13200Y	6900 7200 7620 7970	6900/11950 7200/12470 7620/13200 7970/13800	10
11000	11000		15
13800	12000 12470 13200 13800		15
14400/24940Y		13800/23900 14400/24940	18
19920/34500GrdY		19920/34500	27
22000	22000		27
33000	33000		36

*Note: Weights and dimensions are for reference only, and not for construction purposes. For exact dimensions, please contact Cooper Power Systems.

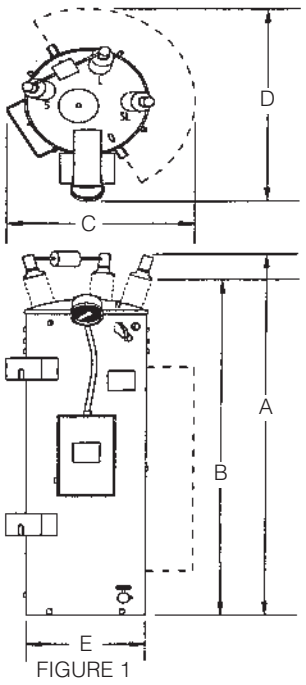

FIGURE 1

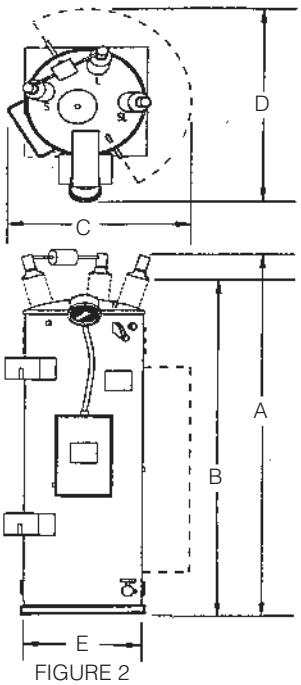

FIGURE 2

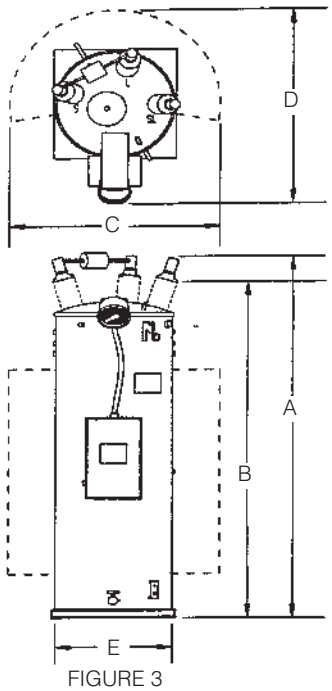

FIGURE 3

TABLE 2
Ratings and Dimensions – 50 Hz

Voltage (kV)	Load Current (Amperes)	kVA	Figure	Dimensions (mm)					Oil (Liters)	Untanking Weight (kgs.)	Total Weight (kgs.)
				A	B	C	D	E			
6.6	50	33	1	1893	1716	800	965	508	217	341	609
	100	66	1	1892	1715	813	965	508	231	341	609
95 kV	150	99	1	Dimensions available at time of quotation/order.							
BIL	200	132	2	1975	1818	915	1232	559	303	445	860
	300	198	3	Dimensions available at time of quotation/order.							
	400	264	3	Dimensions available at time of quotation/order.							
	500	330	3	Dimensions available at time of quotation/order.							
	600	396	3	Dimensions available at time of quotation/order.							
11.0	50	55	1	1994	1817	694	890	508	208	389	661
	100	110	1	1993	1818	864	1194	559	275	432	816
95 kV	150	165	1	2043	1869	1193	1161	610	370	560	1080
BIL	200	220	2	2073	1920	1003	1320	635	360	649	1211
	300	330	3	2370	2208	998	1633	711	674	1007	1964
	400	440	3	2624	2462	1081	1784	838	1060	1059	2545
	500	550	3	Dimensions available at time of quotation/order.							
	600	660	3	Dimensions available at time of quotation/order.							
15.0	50	75	1	Dimensions available at time of quotation/order.							
	100	150	1	2068	1869	1107	1110	610	344	573	1007
150 kV	150	225	2	2145	1971	1163	1278	660	479	707	1334
BIL	200	300	3	2371	2209	1095	1445	711	555	910	1800
	300	450	3	2472	2310	1022	1701	762	791	1191	2252
	400	600	3	2700	2539	1275	1786	838	1098	1434	2904
	500	750	3	Dimensions available at time of quotation/order.							
22.0	50	110	1	2093	1920	927	1270	635	371	455	945
	100	220	2	2174	2031	1005	1405	711	550	783	1494
150 kV	150	330	3	2326	2183	1075	1467	737	659	1005	1873
BIL	200	440	3	2396	2234	1036	1704	762	765	1223	2243
	300	660	3	2675	2414	1330	1848	889	1213	1566	3086
33.0	50	165	3	2895	2754	799	1294	762	757	1080	1957
	100	330	3	3100	2947	1003	1585	965	1480	1638	3249
200 kV	150	495	3	3142	2981	1285	1839	965	1567	1765	3616
BIL	200	660	3	3264	3086	1166	1921	965	1648	1835	3915

TABLE 3
Ratings and Dimensions – 60 Hz

Voltage (kV)	Load Current (Amperes)	kVA	Figure	Dimensions (in.)					Oil (Gallons)	Untanking Weight (lbs.)	Total Weight (lbs.)
				A	B	C	D	E			
2.5	200	50	1	71	64	30	39	20	51	615	1200
	300	75	1	80	74	36	47	25	106	745	1810
60 kV	400	100	1	80	74	37	52	25	108	803	1938
BIL	668	167	1	95	89	40	49	24	132	110	2560
	1000	250	3	110	110	28	61	26	179	2435	4345
	1332	333	3	103	103	37	61	26	183	2450	4755
	1665	416	Dimensions available at time of quotation/order.								
5.0	100	50	1	71	64	30	39	20	51	625	1210
	200	100	1	75	68	35	49	22	71	823	1595
75 kV	250	125	Dimensions available at time of quotation/order.								
BIL	334	167	1	75	75	36	53	22	84	986	2051
	500	250	3	98	92	36	59	24	141	1405	3250
	668	333	Dimensions available at time of quotation/order.								
	833	416	3	105	98	42	70	32	272	2305	5415
7.62	50	38	1	71	64	24	34	20	50	505	1030
	75	57	1	75	68	30	39	20	55	635	1185
95 kV	100	76	1	75	68	31	41	20	56	665	1265
BIL	150	114	1	75	68	35	49	22	71	785	1585
	219	167	2	78	72	36	49	22	81	995	1975
	328	250	2	84	78	44	56	25	100	1285	2530
	438	333	3	97	91	38	61	26	153	1725	3525
	548	416	3	102	96	44	61	27	210	2075	4485
	656	500	3	100	93	40	67	30	224	2222	4934
	875	667	3	100	97	48	68	31	247	3060	5995
	1093	833	3	123	119	63	73	35	448	5620	10620
13.8	50	69	1	75	68	31	41	22	65	831	1538
	100	138	1	79	72	34	47	22	74	1070	1930
95 kV	150	207	1	81	74	40	54	25	104	1180	2550
BIL	200	276	2	80	74	45	51	25	106	1425	2750
	300	414	3	94	87	53	62	28	177	3525	5790
	362	500	3	103	97	57	70	33	287	2550	6080
	400	552	Dimensions available at time of quotation/order.								
	483	667	Dimensions available at time of quotation/order.								
	604	833	Dimensions available at time of quotation/order.								
14.4	50	72	1	75	68	32	43	22	66	767	1491
	100	144	1	77	70	39	54	25	85	1065	2080
150 kV	200	288	2	82	76	45	52	25	97	1485	2760
BIL	231	333	3	92	86	34	61	27	145	1967	3700
	289	416	3	92	85	49	62	28	168	2059	4186
	300	432	3	92	86	60	63	29	204	2040	4475
	347	500	3	102	95	46	68	33	257	2695	5410
	400	576	3	104	97	40	66	30	233	2705	5460
	463	667	3	108	102	51	71	33	289	3060	6265
	500	720	3	108	102	51	71	33	285	3005	6420
	578	833	3	107	101	53	73	35	318	3630	7125
19.92	50.2	100	1	79	72	39	41	24	95	1010	2010
	100.4	200	2	85	78	40	54	26	125	1475	2820
150 kV	167	333	3	94	87	42	55	28	165	2100	3875
BIL	200.8	400	3	96	87	46	62	28	171	2155	4110
	250	500	3	104	97	46	68	33	263	2610	5520
	335	667	3	106	100	50	71	33	287	3095	6285
	418	833	3	107	101	60	73	35	324	3245	7115
	502	1000	3	118	109	46	75	38	311	4115	8645

CONTROLS

CL-2A

- Internal-external voltage source switch
- Automatic/manual control switch
- Manual raise/lower toggle switch
- Position indicator drag hand reset switch
- Neutral indicating light
- Six-digit operations counter
- Panel-mounted fuses
- Band edge indicators
- Voltage test terminals
- External voltage source terminals
- Control knob locking devices
- Set voltage adjustment
- Bandwidth adjustment
- Time delay adjustment
- Line drop compensator settings
- Resistance and reactance reverse polarity switch
- Provisions to allow remote override of regulator operation via discrete (analog) supervisory control

CL-5C

- Source side voltage calculated from tap position
- Internal-external voltage source switch
- Automatic/manual control switch
- Manual raise/lower toggle switch
- Position indicator drag hand reset switch
- Supervisory ON-OFF switch (for use with SCADA)
- Neutral indicating light
- Six-digit operations counter
- Panel-mounted fuses
- Band edge indicators
- Voltage test terminals
- External voltage source terminals
- Set voltage adjustment
- Bandwidth adjustment
- Time delay adjustment
- Line drop compensator settings
- Resistance and reactance reverse polarity switch
- Digital metering package (including instantaneous, demand, and time-tagged demand)
- Profile recorder
- Tap position indication tracking capability
- Voltage limiting (“First house protection”)
- Voltage reduction with 3 modes
- Reverse power flow detection
- Provisions to allow remote override of regulator operation via discrete (analog) supervisory control
- Digital communications capability
- Resident communications protocol (DATA 2179)
- Data port for data reader or personal computer attachment

CONSTRUCTION

Core and Coil Assembly

Ease of service is provided by the design of the core-and-coil, tap changer, and reactor assembly. The entire assembly is cover suspended for ease of removal from the tank for inspection or maintenance.

The coil assembly features an aluminum strip in the series winding that achieves the optimum in ampere turn balance for exceptional strength under through-fault conditions.

Grain-oriented steel is used in the core, with a low reluctance butt joint. The rugged core clamp assembly secures the coil effectively and positions the core for the optimum in quiet operation and low core loss.

With sealed-tank construction, the external oxygen supply is eliminated from the tank environment. With the use of a 65°C rise insulation system and designs with a nameplate rating of 55°C, an additional 12 percent capacity is available from the McGraw-Edison 32-step regulator without any loss of insulation life.

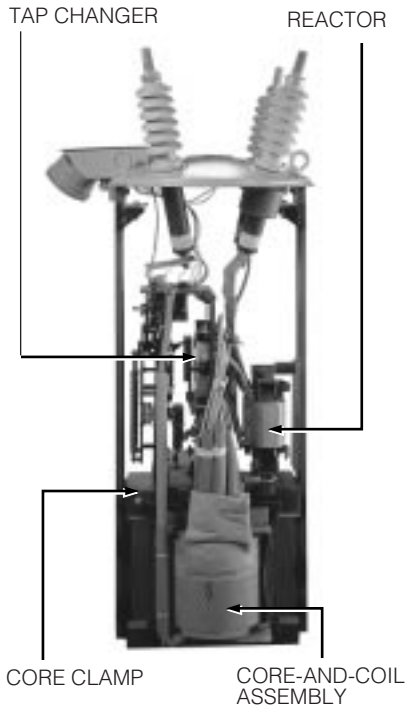

Figure 3.
Core and coil, tap changer and reactor assembly.

Tap Changers

Spring-drive tap changers are typically used in regulators rated below 15 kV, 219 A and below; and units rated 19.92 kV, 100.4 A and below. A spring-drive tap changer is shown in Figure 4. In the larger sizes, the tap change is accomplished by a direct-drive mechanism. A direct-drive tap changer is shown in Figure 5. Smooth tap changes and long contact life are assured through careful design of speed controlling components.

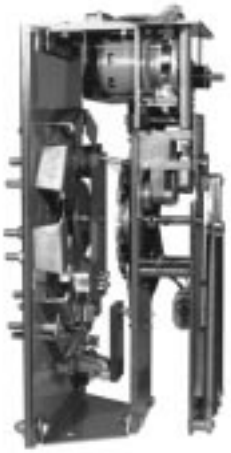

Figure 4.
Spring-drive tap changer.

Figure 5.
Direct-drive tap changer.

Position Indicator and ADD-AMP Capability

The position indicator is mounted on a junction box on the cover of the regulator, and is directly connected to the tap changer by a flexible drive shaft passing through the junction box and terminal board via a sealing gland.

The indicator face is graduated in steps, numbered 1 through 16 on each side of zero. Zero designates neutral. Drag hands indicate the maximum and minimum positions attained during raise and lower operations. The drag hands are reset around the position indicator hand by operating the drag hand reset switch on the control front panel.

The ADD-AMP feature of VR-32 regulators allows increased current capacity by reducing the regulation range. This is accomplished by setting limit switches in the position indicator to prevent the tap changer from traveling beyond a set position, in either raise or lower directions. The limit switches have scales graduated in percent regulation, and are adjustable to specific values of 5, 6-1/4, 7-1/2, 8-3/4, and 10% regulation to alter the regulation range. The five possible load current ratings associated with the reduced regulation ranges are summarized in Tables 4 and 5. At each setting, a detent stop provides positive adjustment. Settings other than those with stops are not recommended. The raise and lower limits need not be the same value unless reverse power is possible.

Figure 6.
Position Indicator.

TABLE 4
ADD-AMP Capabilities of 50 Hz Ratings

Rated Volts	Rated kVA	Load Current Ratings (Amperes)[1]				
		Regulation Range				
		±10%[1]	±8 3/4%	±7 1/2%	±6 1/4%	±5%
6600	33	50	55	60	68	80
	66	100	110	120	135	160
	99	150	165	180	203	240
	132	200	220	240	270	320
	198	300	330	360	405	480
	264	400	440	480	540	640
	330	500	550	600	668	668
	396	600	660	668	668	668
11000	55	50	55	60	68	80
	110	100	110	120	135	160
	165	150	165	180	203	240
	220	200	220	240	270	320
	330	300	330	360	405	480
	440	400	440	480	540	640
	550	500	550	600	668	668
	660	600	660	668	668	668
15000	75	50	55	60	68	80
	150	100	110	120	135	160
	225	150	165	180	203	240
	300	200	220	240	270	320
	450	300	330	360	405	480
	600	400	440	480	540	640
	750	500	550	600	668	668
22000	110	50	55	60	68	80
	220	100	110	120	135	160
	330	150	165	180	203	240
	440	200	220	240	270	320
	660	300	330	360	405	480
33000	165	50	55	60	68	80
	330	100	110	120	135	160
	495	150	165	180	203	240
	660	200	220	240	270	320

[1] Additional 12% increase in capacity is available due to the use of 65° C winding rise insulation if the tap changer's maximum current rating has not been exceeded. For loading in excess of the above values please contact Cooper Power Systems customer service.

TABLE 5
ADD-AMP Capabilities of 60 Hz Ratings

Rated Volts	Rated kVA	Load Current Ratings (Amperes)[1]				
		Regulation Range				
		±10%	±8 3/4%	±7 1/2%	±6 1/4%	±5%
2500	25	100	110	120	135	160
	50	200	220	240	270	320
	75	300	330	360	405	480
	100	400	440	480	540	640
	125	500	550	600	668	668
	167	668	668	668	668	668
	250	1000	1000	1000	1000	1000
	333	1332	1332	1332	1332	1332
	416.3	1665	1665	1665	1665	1665
5000	25	50	55	60	68	80
	50	100	110	120	135	160
	100	200	220	240	270	320
	125	250	275	300	336	400
	167	334	367	401	451	534
	250	500	550	600	668	668
	333	668	668	668	668	668
	416.3	833	833	833	833	833
7620	38.1	50	55	60	68	80
	57.2	75	83	90	101	120
	76.2	100	110	120	135	160
	114.3	150	165	180	203	240
	167[2]	219/232	241/255	263/278	296/313	350/370
	250[2]	328/347	361/382	394/417	443/469	525/556
	333[2]	438/464	482/510	526/557	591/625	668
	416.3[2]	548/580	603/638	658/668	668	668
	500[2]	656/668	668	668	668	668
	667[2]	875/926	875/926	875/926	875/926	875/926
	833[2]	1093/1157	1093/1157	1093/1157	1093/1157	1093/1157
13800	69	50	55	60	68	80
	138	100	110	120	135	160
	207	150	165	180	203	240
	276	200	220	240	270	320
	414	300	330	360	405	480
	500	362	398	434	489	579
	552	400	440	480	540	640
	667	483	531	580	652	668
	833	604	664	668	668	668
14400	72	50	55	60	68	80
	144	100	110	120	135	160
	288	200	220	240	270	320
	333	231	254	277	312	370
	416	289	318	347	390	462
	432	300	330	360	405	480
	500	347	382	416	468	555
	576	400	440	480	540	640
	667	463	509	556	625	668
	720	500	550	600	668	668
	833	578	636	668	668	668
19920	50	25.1	28	30	34	40
	100	50.2	55	60	68	80
	200	100.4	110	120	135	160
	333	167	184	200	225	267
	400	200.8	220	240	270	320
	500	250	275	300	338	400
	667	335	369	402	452	536
	833	418	460	502	564	668
34500	50	50	55	60	68	80
	100	100	110	120	135	160
	150	150	165	180	203	240
	200	200	220	240	270	320

[1] Additional 12% increase in capacity is available due to the use of 65° C winding rise insulation if the tap changer's maximum current rating has not been exceeded. For loading in excess of the above values please contact Cooper Power Systems customer service.
[2] Regulators are capable of carrying current corresponding to rated kVA when operated at 7200 volts.

COOPER Power Systems

© 1998 Cooper Power Systems, Inc.
McGraw-Edison® is a registered trademark of Cooper Industries, Inc.

P.O. Box 1640
Waukesha, WI 53187
www.cooperpower.com

Voltage Regulating Apparatus

COOPER Power Systems

Determination of Regulator Compensator Settings

R225-10-1
Reference Data

CONTENTS

GENERAL 1
ADVANTAGES OF FEEDER REGULATORS 1
FUNCTIONS OF THE AUTOMATIC CONTROLS 1
APPROACH FOR DETERMINATION OF SETTINGS 2
MAKING THE VOLTAGE-DROP CALCULATIONS 2
1. Basic Conditions 2
2. Express Trunk - A 3
3. Local Feeder - B 4
4. Transformer - C 4
5. Secondaries and Services—D and E 4
6. Summary 4
EFFECT OF SHUNT-CAPACITOR LOADS 4
1. Distributed Capacitors 4
2. Lumped Capacitors 5
CONVERSION TO COMPENSATOR SETTINGS 5
1. Single-phase Circuit Regulators 5
2. Three-phase Wye Circuit Regulators 5
3. Three-phase Delta Circuit Regulators 6
REFERENCE SUMMARY AND EXAMPLE 7
1. Step-by-Step Calculations 7
Conditions 7
Solutions 7
2. Short Cut with table 9
DETERMINING LEADING AND LAGGING REGULATORS 9
1. Phase Relations Known 9
2. Field Check for Rotation 9
UNGROUNDED WYE CONNECTIONS 10
PARALLELING REGULATORS 10

GENERAL

Feeder regulators are equipped to automatically and continuously correct circuit voltages according to locally established practices. Procedures for checking and setting the control devices are described in detail in related instructions on the control unit.

Also, however, it is necessary that line-drop compensation values be determined and applied to the compensator. These involve the circuit calcualtions described in R225-1-1.

ADVANTAGES OF FEEDER REGULATORS

Correctly applied and accurately adjusted regulators can be justified economically and because they provide more satisfactory service to the light and power consumer.

It can be demonstrated that maintaining a high quality of voltage control will result in a higher level of permissible loading on feeders, and will defer investment for rebuilding or adding capacity. Because of higher average voltage and, therefore, kwhr usage, an increase in revenue will accrue.

It is obvious that a more uniform voltage level will improve operation of lights, appliances, and motors, and will consequently improve consumer relations.

Therefore, benefits derived justify optimum precision in the application and setting of regulators.

FUNCTIONS OF THE AUTOMATIC CONTROLS

A regulator is equipped with a solid-state voltage-sensing circuit (VSC) that has a voltage balance point and that causes the regulator to change taps to maintain a constant base voltage (usually 120 volts) at its input terminals. This voltage (without compensation) is equal to the line voltage divided by the control winding primary-to-secondary ratio. Main connections of the regulator and of the control winding are illustrated in Figure 1.

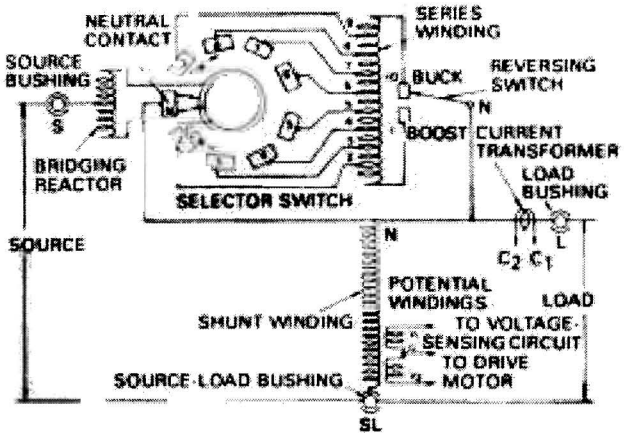

Figure 1.
Schematic of main connections for a single-phase regulator.

These instructions do not claim to cover all details or variations in the equipment, procedure, or process described, nor to provide directions for meeting every contingency during installation, operation, or maintenance. When additional information is desired to satisfy a problem not covered sufficiently for the user's purpose, please contact your Cooper Power Systems sales engineer.

The compensator, essentially an artificial line containing adjustable resistance and reactance elements, is connected to the secondary terminals of a line current transformer. Thus, it can be set to reproduce a miniature replica of voltage drop in the power circuit. This voltage is connected to subtract vectorially from the miniature primary voltage supplied to the voltage-sensing circuit. In order to balance, the VSC will cause tap changes until the line voltage has been changed by an amount equal to the calculated feeder voltage drop. The control connections described are basically illustrated in Figure 2.

Setting the compensator at the correct R and X values to duplicate line conditions is accomplished by adjustment of clearly marked dials as described in instructions of the control unit. Methods that can be used in making necessary voltage-drop calculations and converting them to compensator settings are subsequently described.

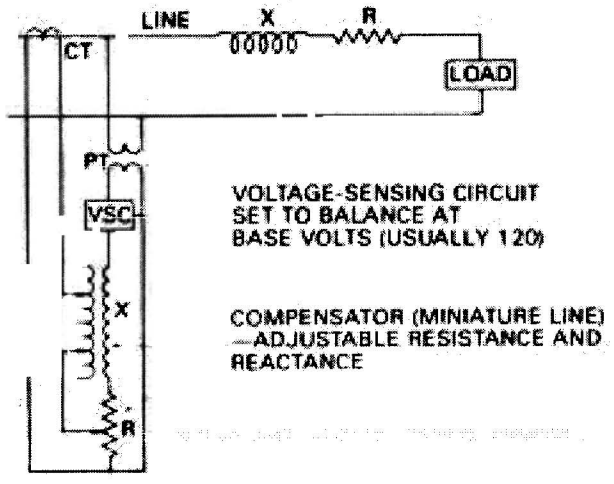

Figure 2.
Simplified connections of compensator and voltage relay.

APPROACH FOR DETERMINATION OF SETTINGS

Accurate setting of the voltage-sensing circuit (VSC) is essential. This VSC acts as the reference standard for circuit voltage control. It can be shown that a narrow band (within practical limits) between raise and lower contact-closing points results in the greatest benefits from automatic feeder voltage regulation. Bandwidth is a constant that adds to the line-drop range and increases the total voltage variation at any point.

Determination of circuit voltage drop, the basis of compensator settings, is most readily accomplished in increments because circuit characteristics and loads along the circuit are nonuniform. A typical distribution circuit problem is illustrated by the schematic diagram and voltage profile of Figure 3.

The schematic and profile show that, for the case illustrated, the total circuit voltage drop is made up of five increments, A through E, which should be considered separately. Under loaded conditions, it will be noted

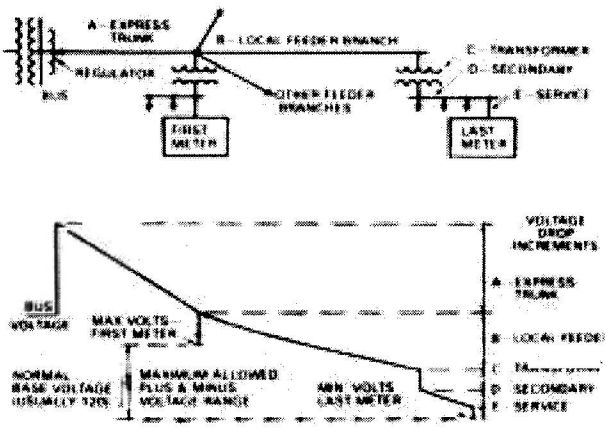

Figure 3.
Typical feeder layout and voltage profile with maximum load.

that the voltage between the first and the last service meters graduates from maximum to minimum values on each side of the nominal base value, usually 120 volts, at the center of regulation. The range from maximum to minimum values is a function of circuit design and loading. Limits allowed are set by economic and other policies established tocally.

There is some point on the circuit where, as the load varies throughout its cycle, the voltage can be held approximately at constant base value. At any load, the maximum overvoltages and corresponding undervoltages along the feeder remain substantially equal if the load varies uniformly. The voltage drop to the point mentioned, i.e., *the center of regulation* (rather than the center of load), is translated into regulator compensator values set to continuously maintain these voltage conditions.

MAKING THE VOLTAGE-DROP CALCULATIONS

Determination of voltage drop to the *regulation center* poses special problems in every case; however, advantage may be taken of similarities and simplifications. On the other hand, there are circuit and load conditions that are incompatible with desirable regulation. These must be rationalized or corrected.

Following, by means of a general example, is a guide for making voltage-drop calculations. Each circuit, whether for distribution or transmission purposes, should be analyzed increment by increment to determine how each should be treated. The example is the distribution feeder illustrated by Figure 3.

1. Basic Conditions

To a practical degree, it is desirable that the loads connected along the circuit be similar in character. They should vary in a similar way—both in magnitude and power factor—throughout load cycles; for example, it would be undesirable to have a large amount of power load on one branch and a predominance of lighting load on another.

The location of power-factor-correction capacitors may be of critical importance. For example, if such capacitors are distributed over the circuit, satisfactory regulation may be accomplished; whereas, a bank located close to and on the load side of the regulator would result in false line-drop compensation. Similarly, cable in the circuit has relatively high capacitance that must be considered. The line current flowing in miniature through the compensator would be of a different magnitude and power factor than that flowing through the circuit impedances. Compensator settings would have to be established by a compromise such as described in the APPROACH FOR DETERMINATION OF SETTINGS section.

It is assumed, for the purpose of the following outline and discussion, that the circuit layout and loading permit good voltage control. Refer to Figure 3 for the letter references contained in the following headings. Calculations are summarized in the REFERENCE SUMMARY section.

2. Express Trunk—A

Compensator setting will be simplified if line-drop calculations are based on the regulator *current transformer primary rating*. Calculate resistance and reactance drops separately. Calculated voltage-drop values can then be converted more directly into compensator volts.

Table 1 provides impedance values for common open-wire circuits. Any cable of appreciable length must, of course, be taken into account. Also, any lumped reactance on the load side of the regulator, such as a current-limiting reactor, must be included.

Table 1
Resistance and Reactance, Single-Conductor Values per 1000 ft of Open-Wire Line.

Copper Size in Circular Mills or B & S Gage (Approx or Al)	Resistance Of One Conductor in Ohms per 1000 Ft at 25 C		REACTANCE at 60-cycle in ohms per 1000 feet of each conductor of a single-phase circuit or of a three-phase circuit with symmetrical triangular spacing. For other arrangements of conductors, see Note. Reactance values are for concentric stranded copper conductors and are approximately correct for aluminum cable conductors.																	
	Stranded Copper Hard; Drawn	Aluminum Cable Steel; Reinforced	Symmetric-Spacing D Between Centers of Conductors (in.)																	
			4	6	8	12	15	18	21	24	27	30	33	36	40	48	60	72	84	96	108
750,000	.0155	.0252	.054	.063	.069	.079	.084	.088	.092	.095	.098	.100	.102	.104	.108	.111	.116	.120	.124	.127	.129
700,000	.0165	.0265	.055	.064	.070	.080	.085	.089	.093	.096	.099	.101	.103	.105	.109	.112	.117	.121	.125	.128	.130
600,000	.0195	.0299	.057	.066	.072	.082	.087	.091	.095	.098	.100	.103	.105	.107	.111	.114	.119	.123	.127	.130	.132
500,000	.0227	.0354	.059	.068	.074	.084	.089	.093	.097	.100	.102	.105	.107	.109	.113	.116	.121	.125	.129	.132	.134
400,000	.0280	.0445	.062	.071	.077	.087	.092	.096	.099	.103	.105	.108	.110	.112	.115	.119	.124	.128	.131	.135	.137
350,000	.0320	.0526	.063	.072	.078	.088	.093	.098	.101	.104	.107	.110	.112	.114	.117	.120	.125	.130	.133	.136	.139
300,000	.0371	.0588	.065	.074	.081	.090	.095	.099	.103	.106	.109	.111	.113	.115	.119	.122	.127	.131	.135	.138	.140
250,000	.0445	.0662	.067	.076	.083	.092	.097	.101	.105	.108	.111	.113	.115	.117	.121	.124	.129	.133	.137	.140	.143
0000	.0527	.0881	.070	.079	.086	.095	.100	.105	.108	.111	.114	.116	.118	.121	.124	.127	.132	.137	.140	.143	.146
000	.0662	.1118	.073	.082	.089	.098	.103	.107	.111	.114	.117	.119	.121	.123	.127	.131	.135	.139	.144	.146	.148
00	.0833	.1363	.075	.085	.091	.100	.106	.110	.114	.117	.119	.122	.124	.126	.129	.133	.138	.142	.146	.148	.151
0	.1051	.1705	.078	.087	.094	.103	.109	.113	.116	.119	.122	.124	.127	.129	.132	.135	.140	.144	.148	.151	.154
	.132	.210	.081	.091	.097	.106	.111	.115	.119	.122	.125	.127	.129	.131	.135	.138	.143	.146	.151	.154	.156
2	.167	.267	.083	.093	.099	.109	.114	.118	.121	.125	.127	.130	.132	.134	.137	.140	.146	.150	.153	.156	.159
4	.267	.424	.089	.098	.105	.114	.119	.123	.127	.130	.132	.135	.137	.139	.143	.146	.151	.155	.159	.162	.165
6	.422	.674	.094	.103	.110	.120	.124	.129	.132	.135	.138	.140	.141	.145	.148	.151	.156	.161	.164	.167	.170

NOTE: Geometric Mean Distance (GMD), D for any three-phase conductor arrangement.

$$D = \sqrt[3]{A \times B \times C}$$

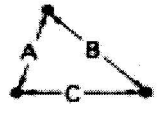

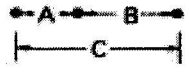

3. Local Feeder—B

Since current in the local line tapers off toward the end, voltage drop along the feeder plots as a curve as illustrated in Figure 3. Also, line conductor sizes may reduce toward the end of line. For these reasons, it usually is not feasible to find and calculate drop precisely to the regulation center. Approximations are necessary. These should be made using the same current base as used for the trunk.

An approximate solution, usually satisfactory where the load is fairly uniformly distributed, is to assume that 100% of the current flows as far as one-third the total length and that the load is concentrated at this point. Another premise for this is that the line characteristics are the same over the length of the branch. The results may be adjusted if there are significant deviations from the assumptions.

Should the circuit have two or more main radial branches, only a portion of the base load will be carried by each. Thus, the local branch-voltage drop will reduce accordingly. Should the load be split evenly three ways, for example, the current and, therefore, the voltage drop for each will be reduced to one-third.

4. Transformer—C

Obviously, individual transformer loads and impedances will vary quite widely. However, transformer regulation is usually not a major portion of the total. Therefore, a flat rule may apply.

The average impedance Z of modern transformers in sizes mounted on poles may be taken as about 2%; also X may be taken as equal to *R*. On this premise, and assuming that transformer load is 100% *at the time* of the base load used for line calculations, the allowance for the transformers will be 1.4% resistance and 1.4% reactance volts drop. These come from the above transformer values where $Z = 2$ *and* $R = X$; *i.e.,* R *or* $X = \sqrt{2}$. *Appropriate* adjustments can be made by ratio for any other percent load.

To combine properly with calculated line values, the voltage drop must be correctly converted to volts on the primary side of the transformer.

5. Secondaries and Services—D and E

By calcualtion. average voltage drops for the secondaries and services should be approximated. The combined total may approximate 2%, each, *R* and X voltage drops, if these circuits are open-wire. Values used will be influenced by local circuit design (such as the use of triplex cable) and loading practices If Table I is used, the drop calculated will be the per-conductor value. Therefore, if the service is three-wire, 120/240 volts, for example, the percentage is calculated using a 120-volt base.

The percentages *R* and X are translated into primary terms, following the method used for the transformer. The percentage values may be combined with the transformer values so only one conversion is involved.

6. Summary

If based on the impedance in Table 1, the primary line voltage-drop values (for A and B, Figure 3) are on a single-conductor basis. Thus, they are in basic form to be converted for the particular type of circuit and regulator connection (see CONVERSION TO COMPENSATION SETTINGS section). The transformer and secondary percent impedance values (C, D, and E) are multiplied by the transformer primary voltage rating to obtain equivalent volts drop. It is assumed. for Table 2 (multipliers) that local service transformers are phase-to-neutral connected on four-wire wye systems and phase-to-phase connected on three-wire delta systems.

Table 2
R and X Voltage-Drop Multipliers According to Type of Circuit

Portion of Circuit (Figure 3)	Single Phase of Wye	Single Phase of Delta	Three-Phase Wye	Three Phase Delta
A + B	2*	2	1	$\sqrt{3}$
C + D + E	1	1	1	1

*Assumes that the entire load current returns through the neutral wire. Multiple grounding can reduce the value to near 1.5.

Resistance and reactance voltage-drop values from Table 2 will be in a form to convert, either combined or separately, to regulator compensator settings. In practice, it may be feasible to calculate for each circuit only the primary line values, and to develop standard values for the local transformer and secondary circuits.

The CONVERSION TO COMPENSATOR SETTINGS section contains a complete summary for reference when determining settings for a specific circuit.

EFFECT OF SHUNT-CAPACITOR LOADS

The effect of shunt-connected capacitors on VSC and compensator settings depends to a great extent on where they are connected. Capacitor loads can reduce the effectiveness of compensation. Distribution of the capacitor and service loads over the circuit usually differs; also, capacitor loads remain constant, while the service loads vary.

Following are some combinations of conditions encountered in practice and modifications in settings that they suggest. Solving the problem for the maximum service load should produce acceptable results. If the maximum and minimum voltages (i.e., at the first and last meters) occurring under this condition are within established limits, then voltages at minimum load should normally be satisfactory. It is assumed that the amount of shunt-capacitor load is within the bounds of good engineering practice; however, large amounts of cable may cause difficulty.

1. Distributed Capacitors

If there is a reasonable uniformity in the spread of capacitors, the power factor of the current will be substantially the same everywhere along the line. Then, power factor of the current causing voltage drop in the line would be close to that of current flowing in the compensator. Thus, setting calculations would be only slightly complicated.

Shunt capacitors are usually connected to the primary line. There, they do not reduce transformer or secondary voltage drop. The voltage drops in these elements of the total circuit would be slightly higher than they appear to be at the regulator. One method of approximating this is to add a small value, probably less than 1%. to the total of the calculated transformer and secondary voltage-drop values.

Another approach is suggested by the fact that the capacitors cause a specific and constant reduction in voltage drop along the line regardless of variations in service load. Most of the reduction is due to the effect of a leading capacitor current tlowing through the line reactance. To make use of this fact, the voltage improvement at the regulatlon center can be separately calculated for only the capacitor load without regard to the service load. Since this value is a constant, the increase in line voltage due to the capacitors can be translated into a reduction in the voltage setting of the voltage-sensing circuit. Then, the compensator values for the primary line must be calculated as if there were no capacitors. These values would be based on the original base kw load, but on a new kva (ampere) value corresponding to the service load power factor. That is, the voltage-drop values to be used for the primary line portion of compensator settings would be increased by the ratio of power factors with—and without —the capacitors:

$$\frac{\text{Power factor with capacitors}}{\text{Power factor without capacitors}} \times \text{original voltage-drop}$$

2. Lumped Capacitors

Capacitor banks of considerable size or a large amount of cable pose special problems, usually rationalized by compromise. Where fixed banks are installed at some distance out and on the feeder branches, the solution frequently may be treated as the above distributed capacitors.

Large concentrations of capacitance near, and on the load side of, the regulator should, if possible, be avoided. A compromise of setting values, determined with—and without—capacitors, would necessarily be required. The regulator compensator has no way of knowing that the capacitor current does not flow through the impedance of the line, thus it has no chance to improve the voltage along it. Another approach is to increase the VSC voltage setting by an amount equivalent to the rise in voltage that would have been caused by such capacitors had they been connected out on the line. This solution would, at full load, result in correct voltage at the regulation center, but a check should be made for excessively high voltage at minimum load.

Switched capacitors, connected anywhere on the line, also require a compromise in determining compensator settings. Settings halfway between calculated requirements with—and without—the capacitors connected may prove to be a reasonable compromise.

CONVERSION TO COMPENSATOR SETTINGS

The line-drop compensator has adjustable resistance and reactance elements connected in series. Controls of each are marked in one-volt increments through 24 volts. (The resistance element actually is a rheostat that can be positioned between one-volt markings.) The voltage drop across each compensator element will be as marked *when primarr current through the current transformer is at CT (not necessarily regulator) rated* value. listed in Table 3.

Table 3
Current Transformer Primary Ampere Values that Produce Dial-Marked Compensation Values

Regulator Current Ratings	CT Primary Current Ratings
25	25
50	50
75	75
100	100
150	150
167, 200	200
219,231, 250	250
289, 300	300
328, 334,347, 400, 418	400
438,463, 500, 548, 578, 656,668	600
833	800
1000	1000
1332, 1665	1600

NOTE: Current transformer primary ampere value (CT ratios per nameplate) that results in 24 volts resistance and 24 volts reactance compensation, as marked on compensator dials. The current transformer value is appropriate for making voltage drop calculations, rather than the regulator rating.

The voltage across the compensator subtracts vectorially from the auxiliary control potential voltage. The resultant is applied to the voltage-sensing circuit, causing it to react as if it were at the center of regulation. Regulator and compensator connections are illustrated schematically in Figures 1 and 2.

The regulator will change taps until the voltage across the VSC is the nominal preset value, usually 120 volts. Without compensation, this will be exactly the primary voltage divided by the overall ratio of the control potential windings. This ratio can be changed by means of a secondary auxiliary transformer usually provided for special purposes. Overall control potential ratios, which must be used to obtain accuracy, are listed in Table 4.

Table 4
Control Potential (CP) Ratios, Including Effect of Ratio Adjustment

Regulator Voltage Rating	Nominal Single-Phase Voltage	Ratio Adjusting Data		Nominal Control Setting	Overal Potential Ratio*
		Int. Tap	Cont. Tap		
2500					
20:1	2500			125	20:1
	2400			120	20:1
5000					
40:1	5000	4.8	120	125	40:1
	4800	4.8	120	120	40:1
	4160	4.8	104	120	34.6:1
20:1	2400	2.4	120	120	20:1
7620					
60:1	7980	7.2	133	120	66.5:1
	7620	7.2	127	120	63.5:1
	7200	7.2	120	120	60:1
40:1	4800	4.8	120	120	40:1
	4160	4.8	104	120	34.6:1
20:1	2400	2.4	120	120	20:1
13800					
115:1	13800	13.8	120	120	115:1
	13200	13.8	115	120	110:1
	12000	13.8	104	120	100:1
57.5:1	7980	6.9	133	125	63.5:1
	7620	6.9	133	120	63.5:1
	7200	6.9	120	125	57.5:1
	6900	6.9	120	120	57.5:1
14400					
120:1	14400	14.4	120	120	120:1
	13800	14.4	115	120	115:1
	13200	14.4	110	120	110:1
	12000	14.4	104	115	104:1
60:1	7980	7.2	133	120	66.5:1
	7620	7.2	127	120	63.5:1
	7200	7.2	120	120	60:1
19920					
166:1	19920	19.9	120	120	166.1
120:1	14400	14.4	120	120	120:1
	13800	14.4	115	120	115:1
	13200	14.4	110	120	110:1
	12000	14.4	104	115	104:1
60:1	7980	7.2	133	120	66.5:1
	7620	7.2	127	120	63.5:1
	7200	7.2	120	120	60:1

*Nominal Control Setting and Overall Potential ratio may vary slightly from one regulator rating to another. See the regulator rating plate for determining the exact values.

From the above, it is evident that actual primary volts drop, calculated with current transformer full-load current as previously described, divided by the specific overall control voltage ratio, basically becomes the setting for the compensator. In addition, however, the type of circuit and regulator connections must be taken into account.

1. Single-phase Circuit Regulators

For either wye or delta systems supplying independently regulated single-phase circuits, the voltage-drop values are converted by potential ratio directly into compensator settings. The voltage-drop values used must include both supply and return conductors.

2. Three-phase Wye Circuit Regulators

A four-wire-wye circuit, Figure 4, operates basically with the load current in phase with the phase-to-neutral voltage. Therefore, calculated circuit voltage-drop-to-neutral (one conductor) values can be converted directly to compensator settings.

Calculations are the same whether regulation is by means of three single-phase regulators or a three-phase unit.

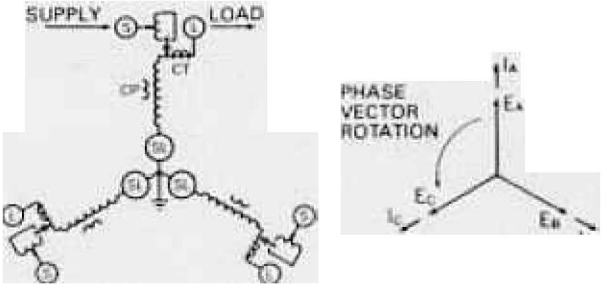

Figure 4.
Four-wire, three-phase wye with three-phase or single-phase regulators.

3. Three-phase Delta Circuit Regulators

For three-wire-delta circuits, only if regulator windings are wye connected and neutrals are stabilized can compensators be set with voltage-drop values converted directly, using the control potential ratio. For such regulator compensation, all voltage-drop calculations (including transformers and secondaries) would have to be treated as if the load was wye connected.

For single-phase regulators connected either closed delta (Figures 5 and 6) or open delta (Figures 7 and 8), an extra step may be required in making compensator settings. This is because the control potentials are in phase with the line-to-line voltages; whereas, the load currents are basically in phase with hypothetical, 30-degree displaced line-to-neutral voltages.

Assuming 100% power-factor load, the line current is 30 degrees out of phase with the line-to-line voltage. Therefore, the compensator voltages would be shifted 30 degrees from the control voltage. The direction of shift may be either lead or lag, depending on regulator connections. It will be noted in Figures 5 and 6 that, with three regulators in closed delta, phase relations for all three regulators will be the same whether lead or lag; whereas, with two regulators in open delta, one will lead and one will lag.

As a result of the 30-degree phase displacement the magnitude of the compensator resistance and reactance values must be adjusted.

It has been proved that compensation values can be mathematically adjusted to artifically correct both phase angle and magnitude discrepancies, and these corrections will hold for any load power factor. The same corrections, to be made for either closed-delta or open-delta regulator connections, are obtained with the following equations:

R_1 =0.866R—0.5X and X_1 =0.866X+0.5R for lagging unit

R_2=0.866R+0.5X and X_2=0.866X—0.5R for leading unit

NOTE: The above calculations can be quickly made by using Figure 9 (see page 8).

Should any resistance or reactance value calculated with the equations prove to have a negative sign, then the effect of that element must be reversed. Reference must be made to the control instruction manual for the method of reversing the resistance compensation and for reversing the reactance compensation.

Compensator resistance/reactance settings for delta-connected regulators differ based on the vintage of the control, as follows:

Key-entry Controls: McGraw-Edison (Cooper) CL4-series controls and newer require that the regulator configuration (Function Code 41) be entered. Compensator settings for these controls must be the unadjusted R and X values for a wye (star) system. Based on the programmed value of Function Code 41 (delta lead or delta lag) these newer controls automatically calculate the R_1 and X_1 or R_2 and X_2, and use the appropriate values in the LDC function.

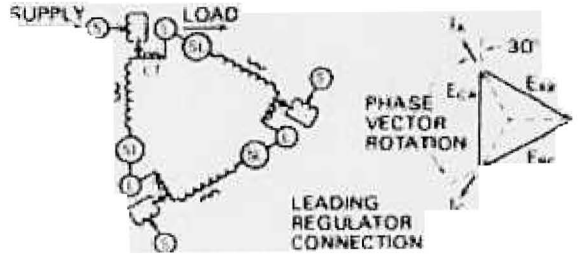

Figure 5.
Three-Phase, closed-delta connection—Case 1.

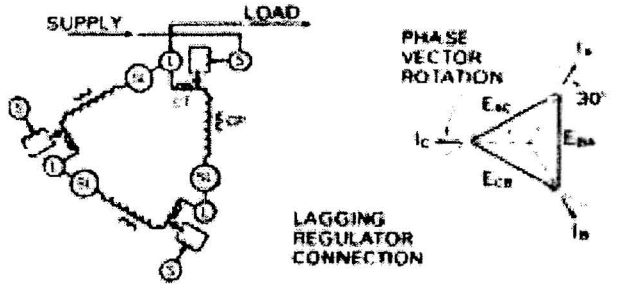

Figure 6.
Three-Phase, closed-delta connection—Case 2.

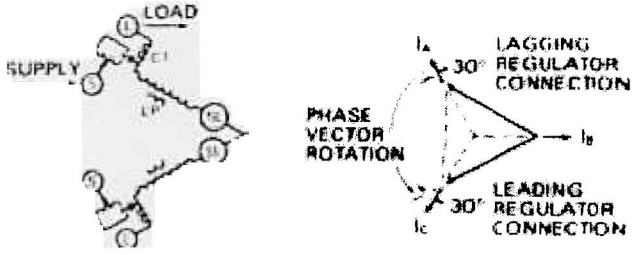

Figure 7.
Three-Phase, open-delta connection—Case 1.

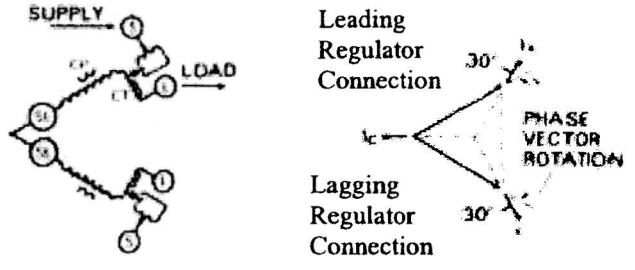

Figure 8.
Three-Phase, open-delta connection—Case 2.

Dial-type Controls: McGraw-Edison (Cooper) CL-2A controls and older do not allow for the programming of the regulator configuration, therefore, the resistance and reactance settings on these controls must be the adjusted values of R_1 and X_1 or R_2 and X_2, as calculated above.

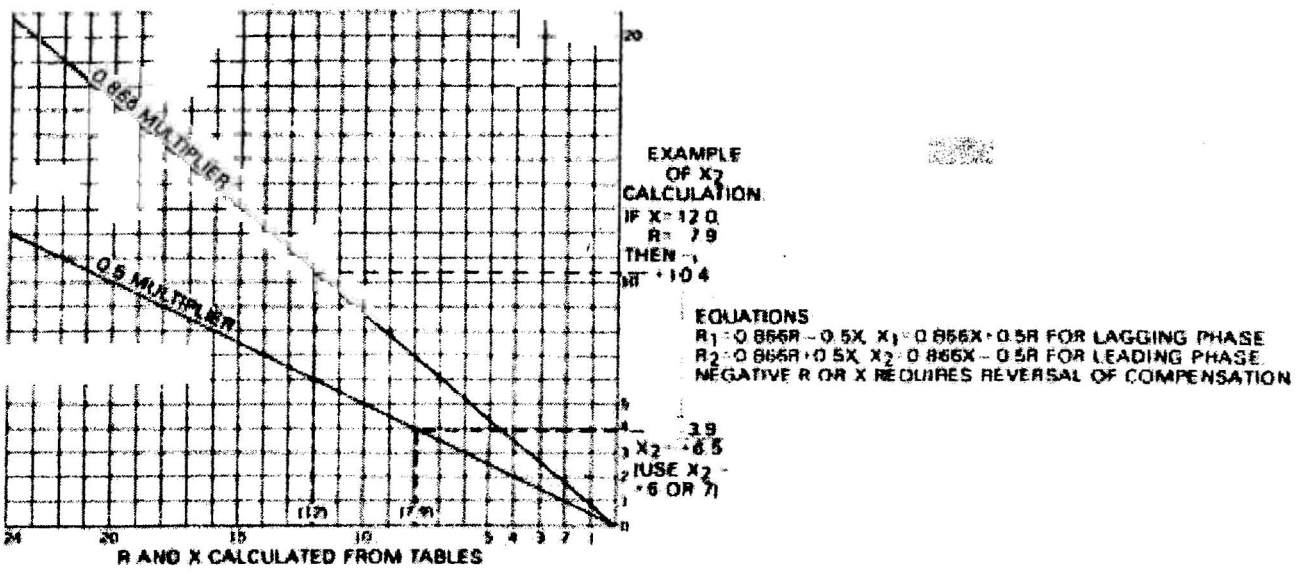

Figure 9.
Chart and formulas for converting compensator settings to values for delta-connected regulators.

NOTE: It is not the purpose here to discuss the relative merits of various regulator connections. However, it may be noted that (a) current transformers of closed delta regulators are inside the delta, causing up to 10% error in compensation (undercompensation); (b) a phase rotation results at any position but neutral with closed-delta banks, but not with open-delta banks; (c) closed delta banks provide 50% more voltage regulation range than open delta (15% instead of 10%); (d) there is some loss in kva capacity with delta connections because of load phase angle (inherent 30 degrees from regulator).

REFERENCE SUMMARY AND EXAMPLE

The MAKING THE VOLTAGE-DROP CALCULATIONS, EFFECT OF SHUNT-CAPACITOR LOADS, and CONVERSION TO COMPENSATOR SETTINGS sections contain general instructions for determining compensator settings that will be of optimum value. For the purpose of this summary section, it is assumed that the basic principles used for calculations are understood.

1. Step-by-Step Calculations

By the example and solution below, the procedure outlined in MAKING THE VOLTAGE-DROP CALCULATIONS section is illustrated.

CONDITIONS

Circuit: Three-wire delta, 2400-volt.

Regulators: Two 300 amp in open delta.

Primary: Express—2000 ft, 4/0 Cu, at 36 in. GMD; branches—two with equal loads evenly distributed, each total 3000 ft, 2/0 CU, at 36 in. GMD.

Transformers: Assumes average impedance 1.4% *R*, 1.4% X and 100% load when regulator CT fully loaded.

Secondaries and Services: Assume 2% *R* and 2% X voltage drop when regulator CT is 100% loaded.

SOLUTION

1. From Table 1, express $R = .0527$ and $X = .121$ ohms per 1000 ft for a total $R = .105$ and $X = .242$ ohms. At 300 amps CT primary rating (listed for regulator in Table 3) per-conductor volts, drop in $R = 31.6$ and in $X = 72.6$.

2. From Table 1, Branch $R = .0833$ and $X = .126$ ohms per 1000 ft. At 150 amps per branch to regulation center, one-third out on branch length, voltage drop in $R = 12.5$ and in $X = 18.9$.

3. Summarizing primary feeder, $R = 44.1$ and $X = 91.5$ volts per wire or to neutral. For a delta circuit, this converts—phase-to-phase—to $R = 76.4$ and $X = 158.5$ volts (from V-6, multipliers equal 1 for wye, $\sqrt{3}$ for delta, and 1.5 to 2 for single-phase).

4. To convert 3 to control voltage level, divide by the overall potential ratio from Table 4; in this case, 20/ 1. The result is $R = 3.8$ and $X = 7.9$ volts.

5. Summarizing transformer and secondary drops, using assumptions: $R = 3.4\%$ and $X = 3.4\%$ or 81.6 *R* and 81.6 X volts at the 2400 volt primary rating. By potential ratio division, this becomes $R = 4.1$ and $X = 4.1$ at control voltage level.

   Note that these values may be large and important relative to the primary line drop; therefore, a very careful analysis to determine average circuit conditions is justified.

6. Adding 4 and 5, $R = 7.9$ and $X = 12.0$ volts, total base control-level voltages.

7. Since this is a delta circuit with open-delta-connected regulators, the R and X settings are determined by artifical adjustment of the calculated voltages 6, using the chart, Figure 9. (For single-phase and four-wire, three-phase circuits, settings would be the calculated values of 6.) The chart shows a sample calculation.

If final setting calculations for delta regulators should be negative, it will be necessary to reverse the particular compensator element, as discussed in CONVERSION TO COMPENSATOR SETTINGS, Item 3.

2. Short Cut with Table

For convenience, calculations covered by Steps 1, 2, 3, and 4 in the step-by-step calculations are consolidated into a multiplier table, Table 5. The correct multiplier times line impedance provides, in one step, the basic voltage for setting the compensator. Above Steps 5, 6, and 7 in the step-by-step calculations must be followed as described.

For the branch primary calculation (Step 2), the multiplier must be selected according to the equivalent current transformer rating; i.e., corresponding to the actual branch load (150 amps for the example). Table 5 cannot be used without correction if the potential ratio is other than listed. The summations of the values for the express trunk (Step 1) and branch (Step 2) are necessarily made at the control voltage level.

DETERMINING LEADING AND LAGGING REGULATORS

A leading regulator of closed- or open-delta-connected banks is that unit in which 100% power-factor line load current (measured at the current transformer) leads the regulator voltage (measured at the control potential) by 30 degrees. In the lagging unit, the current lags the voltage by 30 degrees.

1. Phase Relations Known

If the phase rotation and identification of the circuit are known, units which are leading and units which are lagging can be identified by reference to Figure 5 through 8. The same relations hold, of course, should phase identifications (vector markings) in any diagram be rotated, provided the same phase order is retained.

2. Field Check for Rotation

Phase rotation, if unknown, can be determined in the field by the action of the individual regulators in an open-delta-connected bank when the reactance compensation is changed. If the bank is to be connected in closed delta, an open-delta connection may be made until phase rotation is determined or the SL terminal of one regulator can be transferred temporarily to the third phase for comparison.

With an open-delta connection, and a substantially balanced, sizable load of any power factor, *the voltage (or tap position) of the lagging regulator will increase the most* when the reactance compensation values are increased equally. Starting with zero R and X compensation, increase the X compensation value of each equally, until the difference in the voltage change is sufficient to be positively recognized.

Table 5
Multipliers for Direct Translations of Line Impedance to Compensator Settings

Nameplate Ratings		CT Primary Amps	Multiplier for Type of Circuit Connection		
Volts	kva		Wye (Base)	Single (2 x Base)	Delta (√3 x Base)
2500 Class Operating 2400 with 20/1 CP	25	100	5.00	10.00	12.98
	50	200	10.00	20.00	17.30
	75	300	15.00	30.00	25.95
	100	400	20.00	40.00	34.60
	125	600	30.00	60.00	51.96
	167	600	30.00	60.00	51.96
	250	1000	50.00	100.00	86.60
	333	1600	80.00	160.00	138.56
	416.6	1600	80.00	160.00	138.56
5000 Class Operating 4800 with 40/1 CP	25	50	1.25	2.50	2.17
	50	100	2.50	5.00	4 33
	100	200	5.00	10.00	8 66
	125	250	6.25	12.50	10.83
	167	400	10.00	20.00	17.32
	250	600	15.00	30.00	24.25
	333	600	15.00	30.00	24.25
	416.6	800	20.00	40.00	34.64
7620 Class Operating 7200 with 60/1 CP	19.1	25	0.42	0.84	0.73
	38.1	50	0.83	1.67	1.44
	57.2	75	1.25	2.50	2.17
	76.2	100	1.67	3.33	2.89
	114.3	150	2.50	5.00	4.33
	167	250	4.17	8.33	7.22
	250	400	6.67	13.33	11.55
	333	600	10.00	20.00	17.32
	416.6	600	10.00	20.00	17.32
	500	600	10.00	20.00	17.32
13800 Class Operating 13800 with 115/1 CP	69	50	0.43	0.87	0.75
	138	100	0.87	1.74	1.50
	276	200	1.74	3.47	3.00
	414	300	2.61	5.21	4.50
14400 Class Operating 14400 with 120/1 CP	72	50	0.42	0.84	0.73
	144	100	0.83	1.67	1.44
	288	200	1.67	3.33	2.89
	333	250	2.08	4.17	3.60
	416	300	2.56	5.00	4.33
	500	400	3.33	6.67	5.77
	576	400	3.33	6.67	5.77
	667	600	4.17	8.33	7.22
	833	800	6.67	13.33	11.55
19920 Class Operating 14400 with 166/1 CP	50	25	10.16	10.32	10.28
	100	50	0.31	10.62	10.54
	200	100	0.63	11.25	11.09
	333	200	1.25	12.50	12.17
	400	200	1.25	12.50	12.17
	500	250	1.50	13.00	12.60
	667	400	2.50	15.00	14.33
	833	400	2.50	15.00	14.33

Multpliers for other control potentials can be calculated by multiplying by the ratio shown over the new ratio times the value shown.

Exp: Wye (Base) for 76.2 kva, 7620 Class with 63.5/1

$$\text{CP Ratio} = \frac{60}{63.5} \times 1.67 = 1.58$$

UNGROUNDED-WYE CONNECTIONS

The conventional methods of connecting single-phase regulator banks is to use the grounded-neutral wye connection on a four-wire system and phase-to-phase connections on a three-wire system. When regulators are wye connected, it is normally necessary to stabilize the neutral by some means, this being accomplished by connection to the system neutral. If the common point (neutral) of the bank is not stabilized, it will shift electrically relative to the phase conductors, and voltages across individual units may vary widely.

If, for some reason, it is necessary to connect a regulator bank in wye, but isolate its neutral from the system, some special stabilizing provision is required. A practical method is to install a small grounding bank, consisting of three transformers, each from one-third to two-thirds the kva rating of the individual regulators. The rating within the range depends on the expected unbalance in load.

Three-phase regulators are normally designed for use on a four-wire system, with the regulator neutral grounded. Should it be necessary to isolate the regulator neutral, special provisions must be made. The neutral may be stabilized with a tertiary or by a grounding bank such as previously described.

Neutral shift may be tolerable when a three-phase regulator is supplying a substantially balanced load; however, special phase-to-phase instrumentation must be provided.

PARALLELING REGULATORS

Parallel operation of either three-phase or single-phase regulators necessitates some special provision to prevent off-step operation. This would cause the flow of excessive circulating current between regulators. If line-drop reactance compensation is used in the normal manner, the condition would become progressively worse because tap changes would be called for until the regulators run to opposite limits.

CAUTION

Under any circumstance, the impedance of regulators is too low to permit operation in direct parallel. Circulating current would be excessive even if they were only on tap off the same position. A parallel must have a loop impedance such as that provided when the regulators are inter-connected through different transformers.

There are several ways to prevent excessive off-step positioning of regulators operating in parallel. The most common, and one for which provision is built into the regulator control system, is to reverse the reactance compensation. Voltage drop through this element would then be in a direction to cause the regulators to change taps together.

A second method, for which provision is built into McGraw-Edison standard automatic control systems, is reactor paralleling—a method based on separation of load and circulating current. The circulating current, which is passed through all control units of the parallel, is used to operate the voltage-regulating relays and self-correct an off-position condition. Terminals of the multiwinding reactor coil are accessible at a control terminal block.

Other paralleling methods in use for special purposes can usually be worked into the normal control scheme.

COOPER Power Systems

Voltage Regulators

Reference Information

Voltage Regulators vs. Load Tap Changers

R225-90-21

It appears to be rather simple: The basic function of an electrical utility is to supply power to its customers. Voltage to be supplied is defined within a pre-determined range.

Unfortunately, the laws of physics enter in, with system losses and voltage sags that must be corrected and regulated (in a technical sense) in order to stay within the voltage range. There are choices to be made in how to regulate voltage; some of these choices can require significant capital expenditures.

For many utilities, demand for electricity continues to grow. New demand must be met with increased supply. Demand Side Management and Distribution Automation look to utilize existing system resources more efficiently. Paybacks from lower system losses and deferred use of costly peak demand electricity justify purchases of new equipment. Modular designs are favored, using products optimized for their function. Future benefits would likely be realized in ease of repair and improved availability when replacement is needed.

Even in the real world of ongoing maintenance and occasional system or component failures, objectives of minimizing outage time and limiting equipment failures can be realized. The use of more simple, basic, modular products increases the potential for benefits in product availability, performance optimized in product function, and reduced concentration on large engineering design development. Modular equipment offers the flexibility of modeling each feeder to supply service in an optimized range across most of the line or to the load center.

To meet today's as well as anticipated future needs, utilities will be focusing their efforts to better utilize equipment already in place, and to carefully evaluate the inclusion of new equipment. Three factors to consider in a new equipment purchase decision are these:

Expected utilization level of the equipment,

Ease of use of the equipment, and

Future maintenance schedules and anticipated repair rate.

As an example, in the purchase of equipment to regulate substation voltage, the following product alternatives may be considered (see Figure 1):

(1) Single-phase Regulators in conjunction with a Transformer without a Load Tap Changer (LTC)

(2) Single-phase Transformer with LTC in one package

Consider the common situation where equipment maintenance or failure requires taking product offline, i.e., de-energization. With a Transformer with LTC, whenever one phase of the tap changer fails or requires maintenance, the entire "package" is removed from service–all phases are affected. With single-phase Regulators, if one phase goes offline, it can be replaced with another single-phase unit. One spare Regulator can roll through all three phases when maintenance is required; the same spare unit can function effectively on any of the system's three phases. Full maintenance can be completed without diminishing service anywhere on the system. Spare equipment may be available from emergency reserves, from another substation, or as new–direct from the manufacturer or nearby distributor.

Operation of a single-phase Regulator is essentially the same as for a three-phase device. The main difference is in the separation of the three phases into separate tanks. In separating the active tap-changing mechanisms, several benefits are seen. Each single-phase unit has an independent control to react individually to the voltage

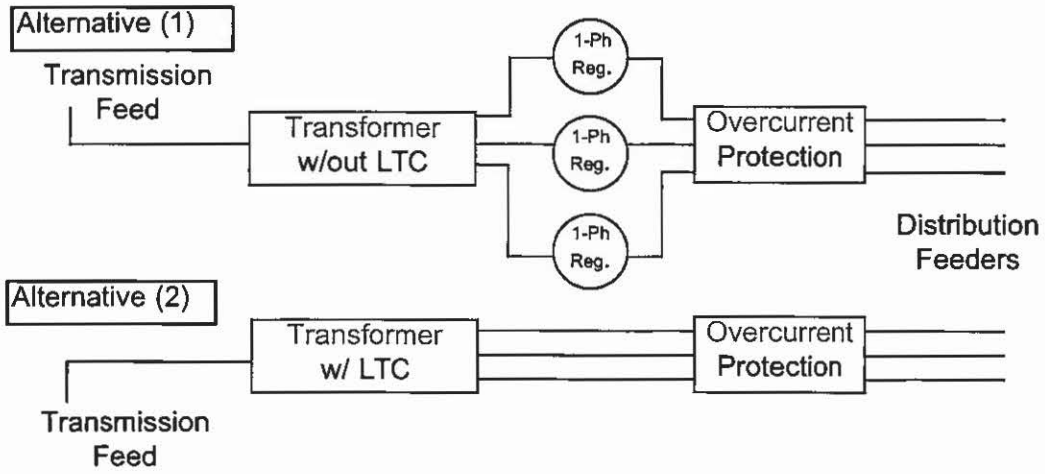

Figure 1.

variances of the phase. Where phase voltages are unbalanced, e.g., in single-phase loading on residential feeders, single-phase units can respond individually to these independent feeder models. Individual line drop settings can be used to model each phase.

By separating the phases, each into its own unit, every unit is made smaller and easier to handle. To a utility, this can mean the difference between using material-moving equipment at hand versus having to contract out for special services. Change-outs can be completed in hours, rather than days. Normal service is quickly restored. Nuisance complaints are minimized.

The Engineering function is often called upon to provide a contingency plan to transfer load in the event of product failure or scheduled maintenance. Bypass switching provides easy installation and the ability to remove a regulator without "dropping" the entire feeder or bus. Bypassing and the use of spare regulators allow for a simpler load transfer. When standard products are used, the product manufacturer can assist in devising a voltage regulation plan. This type of plan can be integrated into other utility projects such as load management or SCADA connection at the substation.

Cost comparisons for the two alternatives are shown below.

TABLE 1

Life Cycle Cost Evaluation

	Regulators	Other Equipment	Initial Cost	Maintenance every 5 years will have 5 charges over 30 years	30 yr Cost
(1) Transformer & 1Ø Regulators	$ 95,000	$2,500	$97,500	$10,000 each occurrence	$147,500
(2) LTC transformer	$120,000	$ 0	$120,000	$35,000 each occurrence	$295,000

Other equipment includes additional buswork and bypass switches.

Maintenance costs are based on $25,000 per LTC repair and a $10,000 Engineering study for load transfer when a LTC unit is removed, $10,000 for a regulator change-out and repair.

Based on 7620 phase-to-neutral, 438 ampere rating.

Clearly, Alternative (1), the single-phase Regulator in conjunction with the non-LTC Transformer, is more cost effective. Further, both the Regulator and the Transformer in Alternative (1) will typically be of a more standard design than the unit in Alternative (2). Standardization brings additional time savings and cost savings through shorter order leadtimes, availability of lower cost spares from the manufacturer, versatility of spares in utility stock, ease of field installation and maintenance, and increased line crew safety levels through consistent operation procedures.

Simplification through standardization. The voltage supply function can be made simpler, after all.

COOPER Power Systems

P. O. Box 1640
Waukesha, WI 53187
http://www.cooperpower.com

© 1999 Cooper Industries, Inc.

Voltage Regulating Apparatus

VR-32 Regulator and CL-2 Control
Operating, Maintenance and Parts Replacement Instructions

McGRAW-EDISON POWER SYSTEMS

S225-10-1

SERIAL NUMBER

88-Year of manufacture
Z-Factory location (Z-Zanesville)
A-Month of Manufacture
A = January,
B = February,
C = March,
D = April,
E = May,
F = June,
G = July,
H = August,
J = September,
K = October,
L = November,
N = December.
XXX - Arbritrary numbers and letters assigned per factory work order.
001 - Serial number of unit on a given factory work order (001-999)

88 Z A XXX 001

This manual pertains to the regulator with the serial number shown in the box above.

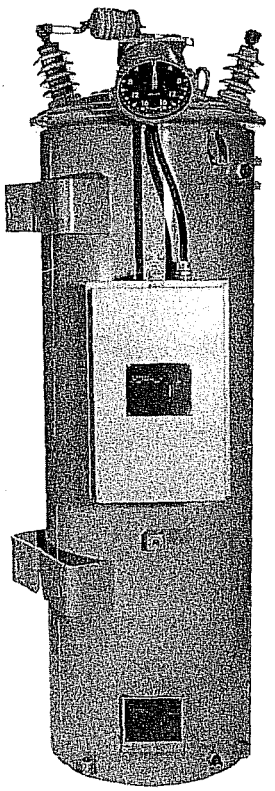

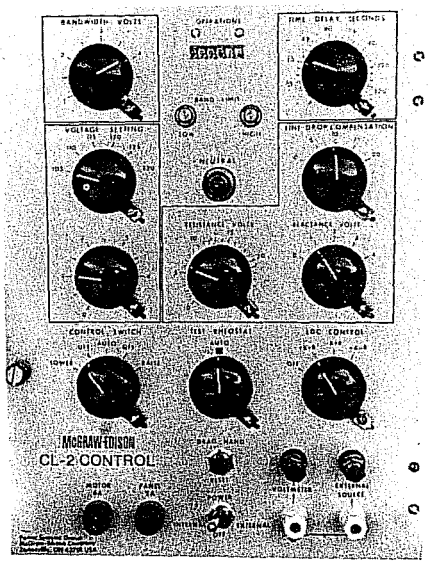

Figure 1.
VR-32 standard voltage regulator with CL-2 control.

CONTENTS

Introduction 2
Receiving/Inspection 3
Unloading 3
Storing 3
Warranty 3
Preinstallation inspection 3
Nameplate 3
Surge protection 4
Series surge arresters 4
Shunt arresters 4
Control 4
Operational check of the control 4
Position indicator 5
Limit switches 5
ADD-AMP capacity 6
Current transformer applications 6
System connections 6
Mounting 6
Tap connections and voltage levels 7
Connecting a regulator into service 8
Procedure I: One bypass switch and two disconnect switches 8
Procedure II: McGraw-Edison bypass disconnect switch 8
Maintenance program 9
Routine inspections 9
Removing a regulator from service 9
Method I: Neutral light method ... 9
Method II: Audible count method . 9
Method III: Longhorn method 10
Deenergizing the regulator 10
Untanking 10
Retanking 10
CL-2 regulator control description ..11
Programming controls 11
Switching modes 12
Sequential (standard) 12
Nonsequential 12
Voltage averaging 13
Setting the switching modes ...13
Operating controls 14
Removal of CL-2 front panel 14
Replacement of CL-2 front panel ..14
SCADA (Supervisory control and data acquisition) 15
Motor blocking and remote motor operation on CL-series controls 16
Early CL-1 controls with current relay 16
CL controls without the current relay 16
Voltage reduction 19
Operation and service 19
System operation (Part I) 19
Control power 19
Manual operation 19
Automatic operation 24
Internal construction of regulator 24
Rear panel signal circuit 31
Control function 31

These instructions do not claim to cover all details or variations in the equipment, procedure or process described not to provide directions for meeting every possible contingency during installation, operation or maintenance. When additional information is desired to satisfy a problem not covered sufficiently for the user's purpose, please contact your McGraw-Edison Power Systems sales engineer.

Voltage divider circuit 31
Printed circuit board.....31
Power supply and reference voltage.....37
Input and filtering circuit 38
Low-voltage detection circuit 38
Differential amplifier 39
Bandwidth setting 40
Time delay 40
Motor relays and output logic 40
Motor current sensing circuit 41
Microcomputer 41
Tap changer operation
Spring- and direct-drive tap changers 43
Motor 43
Reversing switch 44
Drive springs (spring-drive only) 44
Drive mechanism (direct-drive only).....45
Operating sequence spring-drive tap changers 45
Operating sequence direct-drive tap changers 45
Contacts 45
Troubleshooting guide complete regulator in service (Part 2) 46
Calibration check 49
Regulator energized 49
Regulator not energized.....49
Recalibration.....50
Voltage level setting and bandwidth 50
Time delay 50
Junction box troubleshooting 50
Position indicator replacement...51
Troubleshooting the control 51
Panel components 51
Line-drop compensation components 52
Printed circuit board.....52
Printed circuit board left in the control 52
Printed circuit board removed from the control 52
Check No. 1 - power supply and reference 52
Check No. 2 - input and filtering 53
Check No. 3 - differential amplifier 53
Check No. 4 - low-voltage detector 53
Check No. 5 - time delay.....53
Check No. 6 - motor current sense 53
Check No. 7 - bandwidth setting.....53
Check No. 8 - band edge indicators, output logic, drivers and motor relays 53
Check No. 9 - microcomputer, output logic and drivers 54
Check No. 10 - U5 terminals 54
Printed Circuit board removal 54

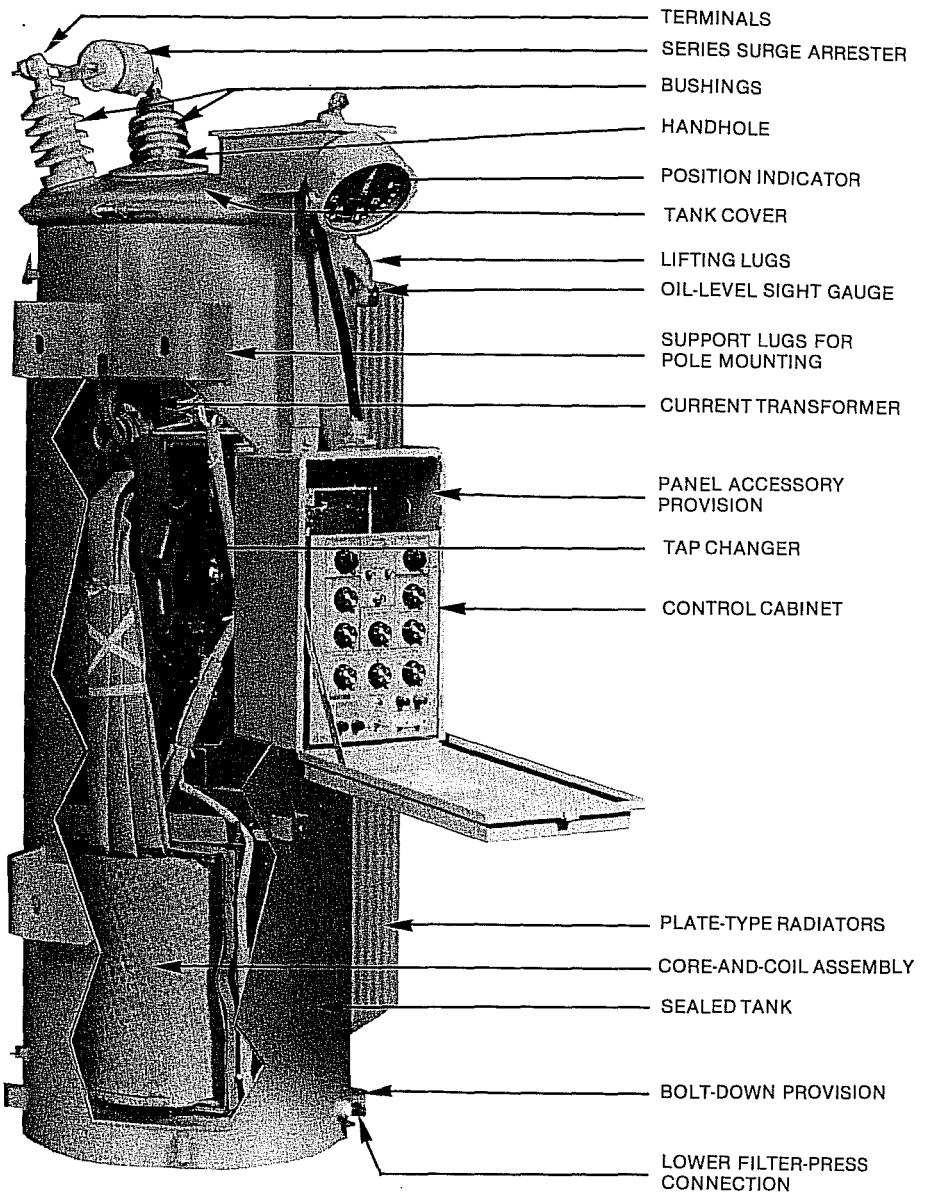

Figure 2.
Features of the VR-32 standard voltage regulator.

Accessories 55
Ampere - demand meters 55
Heater assembly 56
Voltage-reduction control 56
Voltage Limiter.....56
Auxiliary current transformer 57
Voltmeter 57
Reverse power flow detector (RPF) 58
Fan cooling accessory 58
Remote mounting control cable 59
CR relay and terminal block 59
Retrofitting a CL-2 control to previous regulator designs 59
Spare Parts 60

INTRODUCTION

McGraw Edison VR-32 feeder voltage regulators (Figure 1) are regulating auto-transformers. They regulate line voltage from ten-percent raise (Boost) to ten-percent lower (Buck) in 32, 5/8-percent steps.

Pages 2 to 9 of this manual should be read prior to installation. Provided on these pages is all of the basic information required to obtain dependable service from your regulator.

There are three types of step-voltage regulators: source-side series winding, load-side series winding and series transformer. These regulators are usually equipped with an equalizer winding. The nameplate located on the control box clarifies the power circuit involved. The entire internal assembly is attached to the cover for ease of removal from the tank for inspection and maintenance. For a study of the internal construction and control function refer to page 24.

A solid-state control (CL-2), seen in Figure 1, actuates the tap changer in response to feeder voltage fluctuations. *S225-10-2* gives full details on *Spring-Drive and Direct-Drive Tap Changer Switches.* Description of both types are given in this bulletin on pages 43-46.

CAUTION
It will be necessary to open the regulator for inspection purposes, routine maintenance, or for repair when troubleshooting procedures, as outlined, have isolated the problem to an internal malfunction.

Before any internal or external maintenance is performed, the regulator should be removed from service, as described in *Removing a Regulator From Service,* page 9.

RECEIVING/INSPECTION

Prior to shipment, the regulator was thoroughly tested and inspected at the factory. Immediately upon receipt of the regulator shipment, preferably before unloading, a thorough inspection should be made for damage, evidence of rough handling or shortages.

The position indicator, terminal box, arrester, radiators and bushings should all be inspected for evidence of damage.

Should this initial inspection reveal evidence of rough handling, damage, or shortages, a claim should immediately be made with the carrier. Also notify McGraw-Edison Company, Power Systems, Zanesville, Ohio 43701.

Unloading

When the regulator is unloaded, it should be lifted by means of a sling and spreader bar utilizing the lifting lugs which are shown in Figure 2. Do not lift the entire unit with the lifting eyes in the cover. The lifting eyes are only to be used to untank the internal assembly which is attached to the cover.

Storing

If the regulator is not to be put into immediate use, it can be stored with minimal precautions. Retain bracing and blocking that aids in securing and positioning the regulator. Locate the unit where the possibility of mechanical damage is minimized.

WARRANTY

McGraw-Edison warrants that the distribution regulator delivered to the purchaser is free from defects in material and workmanship.

This warranty shall apply only to defects appearing within one (1) year from the date of shipment by the Company. McGraw-Edison must be given prompt notification of any defect which appears under proper and normal use of this distribution regulator within one (1) year from the date of shipment by the Company. The Company will have fulfilled its obligations under this warranty by repairing or replacing the defective part or parts.

PREINSTALLATION INSPECTION

Each regulator is shipped with the switch mechanism in the neutral position, the VOLTAGE SETTING set at 120 volts, the BANDWIDTH set on 2 volts, and the TIME DELAY set at 30 seconds. LINE DROP COMPENSATION-RESISTANCE and REACTANCE are set at zero. The LDC control switch is set on OFF.

The CL-2 control offers three types of tap changer switching modes that allow the user to select the one that best fits the application. The available switching modes are sequential, non-sequential and voltage averaging. The control is factory set in the sequential mode. Page 12 gives information on the functioning and activation of these unique switching modes.

Before connecting the regulator to the line, make the following inspection

1. Check the oil level gauge. Look for for visible signs of oil leakage.
2. Examine the series arrester for damage. If damaged, install a new arrester of the same voltage rating.
3. Inspect the porcelain bushings for damage or leaking seals. Remove the handhole and inspect for evidence of moisture such as; rust or water tracks in the oil. If there is a suspicion that moisture has entered the tank, dry the regulator and filter the oil before putting the unit in service. The oil must test 26 kV minimum in a standard gap (ASTM D-877).

CAUTION
The tap changer must not be subjected to elevated temperatures, above 150°F. See bulletin *S225-10-2 Spring-and-Direct-Drive Tap Changers,* for additional details.

4. If the regulator has been stored for some time, test the dielectric strength of the oil according to ASTM D-877.
   Filter the oil if it does not test a minimum of 26 kV.
5. The regulator may be energized at rated line voltage (with caution) and the control operational check (steps 4 through 8 on page 4) can be performed. (This procedure is optional).
6. A Hipot test may be done to insure adequate electrical clearances to ground. (This procedure is optional).

NAMEPLATE

The VR-32 nameplate (Figure 3) prominently displays the 55/65°C temperature rise rating of the regulator. The sealed-tank system along with the 65°C rise winding insulation allows the regulator to be used at this dual rating. This provides an additional 12-percent capacity without loss of normal insulation life.

The nameplate is stamped with pertinent rating information and includes

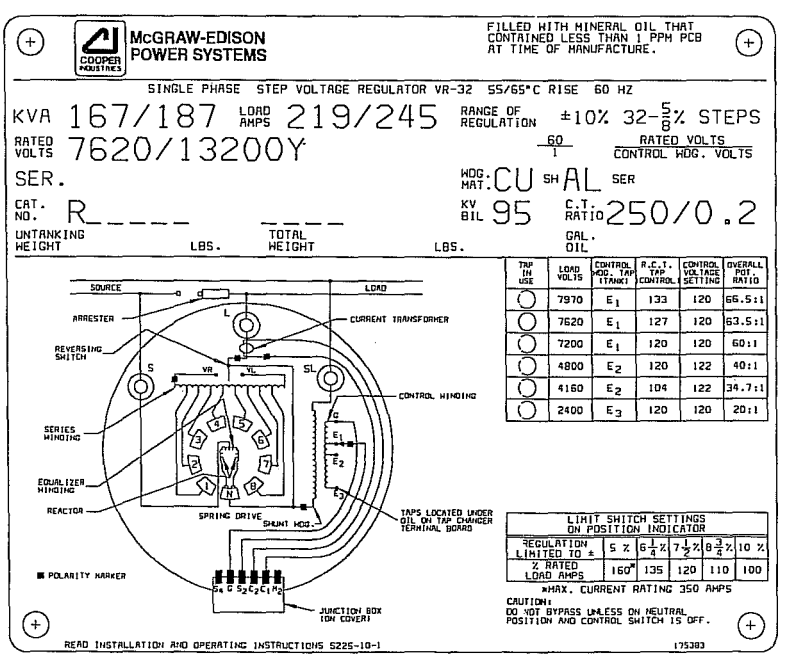

Figure 3.
Nameplate.

the schematic diagram of the VR-32 internal design. Refer to the nameplate to determine the correct adjustment for the required regulated load voltage. A movable peg on the nameplate indicates the tap and load voltage in use.

SURGE PROTECTION

Series Surge Arrester

All VR-32 regulators are equipped with a bypass arrester connected across the series winding between the source (S) and load (L) bushings. This bypass arrester limits the voltage developed across the series winding during lightning strikes, switching surges and line faults. The series surge arrester can be seen in Figure 2. A valve-type series surge arrester of 1-1/2 kV offers series winding protection on all regulators; except those rated over 14,400 volts which have a 3-kV valve-type series surge arrester.

Shunt Arresters

A shunt arrester is an optional accessory on the VR-32 regulator for protection of the shunt winding. The shunt arrester is a direct-connected arrester mounted on the tank and connected between the "L" bushing and ground. For additional protection a shunt arrester may also be installed between the S (source) bushing and ground.

For best results, locate these arresters on the mounting pads provided on the tank near the bushing. Ground the arrester and the regulator tank to the same ground connection using the shortest cable possible. Shunt arrester application data is listed in Table 1.

Control

The CL-2 control (Figure 4) has transformers and relays on the input and output circuits to provide isolation of the printed circuit board, offering the utmost in surge protection. Metal-oxide varistor arresters are provided as an additional measure of surge protection on the sensing and tap changer motor voltage supplies of the control circuitry.

OPERATIONAL CHECK OF THE CONTROL

An operational check of the control should be performed before installing the VR-32 regulator.

1. Connect the three high-voltage bushings together and ground them.
2. Place the POWER switch in the EXTERNAL position, and place the CONTROL switch in one of the OFF positions.

Table 1
Shunt Arrester-Application Data

Regulator Voltage Rating	Nominal System Voltages (volts)		Recommended Shunt Arrester Rating (kV)
	Delta or Single-Phase	Multi-Grounded Wye	
2500/4330Y	2400 2500	2400/4160 2500/4330	3
5000/8660Y	4160 4330 4800 5000	4160/7200 4330/7500 4800/8320 5000/8660	6
7620/13200Y	6900 7200 7620 7970	6900/11950 7200/12470 7620/13200 7970/13800	10
13800	12000 12470 13200 13800 14400		15
14400/24940Y	14400		15
		14400/24940	18
19920/34500GrdY		19920/34500	27

Figure 4.
CL-2 control.

3. Connect a 120-volt, 50/60-Hz source to the EXTERNAL SOURCE terminals. The grounded side of the external source should connect to the ground (white) terminal on the control.
4. Move the CONTROL switch to LOWER. Allow the tap changer to operate to 16L, the 10% buck position.
5. Move the CONTROL switch to RAISE. Allow the tap changer to operate to 16R, the 10% boost position.
6. Move the CONTROL switch to AUTO. Turn the coarse VOLTAGE SETTING counterclockwise for a LOWER operation. Permit the tap changer to operate for two or three steps in buck. Check to insure that the operation counter is registering tap changes.
7. Turn the coarse VOLTAGE SETTING clockwise for a RAISE operation. Permit the tap changer to operate for two or three steps in boost.
8. Return the tap changer to NEUTRAL. When on neutral the NEUTRAL LAMP will light and the POSITION INDICATOR will point to zero. Turn the CONTROL SWITCH to OFF.
9. Press the drag hand reset button, located on the control front panel, to reset the position indicator drag hands to neutral.
10. Disconnect the 120-volt source from the EXTERNAL SOURCE terminals.
11. Remove the shorting connection from the high-voltage bushings and disconnect the ground.

CAUTION
The POWER switch (INTERNAL/OFF/EXTERNAL) must NEVER be used to operate the control. This practice can damage the tap changer and/or the tap changer motor.

POSITION INDICATOR

The position indicator (Figure 5) is mounted on a junction box on the cover of the regulator and is directly connected to the tap changer by a flexible drive shaft passing through the junction box and terminal board via a sealing gland.

The indicator face is graduated in steps, numbered 1 through 16, on each side of zero, which designates neutral. Drag hands indicate the maximum and minimum positions attained during raise and lower operations. The drag hands are automatically reset around the position indicator hand by operating the drag hand reset button on the control front panel.

The position indicator has raise and lower limit switches to prevent the tap changer from traveling beyond a set position, in either raise or lower direction. The limit switches have scales graduated in % regulation, and are adjustable to specific values of 5, 6¼, 7½, 8¾ and 10 % regulation to alter the regulation range. At each setting a detent stop provides positive adjustment. This is the ADD-AMP feature that permits increased current carrying capacity, in conjunction with a reduction in range of regulation.

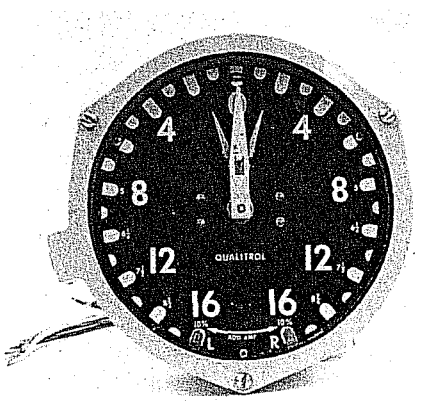

Figure 5.
Position indicator.

Limit Switches

Before setting the limit switches, be sure the new settings will not conflict with the present tap changer position. Do not set the switches **below** the indicated tap changer position. For example, if the indicator hand is at step 12 and the change is to be made from plus or minus 10% (step 16) to plus or minus 5% (step 8), run the tap changer back to step 7 or less, manually. Then set the limit switches for plus or minus 5% regulation.

Limit switches should be set in anticipation of the maximum deviation of primary voltage. For example, on a circuit where 7200 volts is to be maintained, plus or minus 10% will permit voltages between 6480 and 7920 to be regulated effectively. For voltages outside of this range, the regulator will not be able to return the voltage to the preselected level, in this case 7200 volts. The tap changer will have stepped to the maximum tap position and will be unable to regulate further. Five-% regulation would accommodate circuit voltages between 6840 and 7560, maintaining 7200 volts for all voltages in this range.

To set the limit switches, follow this two-step procedure:

1. Loosen the captive bezel securing screws and swing the bezel open.
2. Lift the limit switch adjustment lever free of the detent and slide it to the new setting allowing the lever to snap into the detent stop.

Table 2
ADD-AMP Applications

Rated Volts	Rated kVA	Load Current Ratings (amps)* Regulation Range				
		± 10%	± 8¾ %	± 7½ %	± 6¼ %	± 5%
2500	50	200/224	220/246	240/269	270/302	320/350
	75	300/336	330/370	360/403	405/454	480/534
	100	400/448	440/493	480/538	540/605	640/668
	125	500/560	550/616	600/668	668	668
	167	668	668	668	668	668
	250	1000/1120	1000/1120	1000/1120	1000/1120	1000/1120
	333	1332/1492	1332/1492	1332/1492	1332/1492	1332/1492
	416	1665/1865	1665/1865	1665/1865	1665/1865	1665/1865
5000	50	100/112	110/123	120/134	135/151	160/179
	100	200/224	220/246	240/269	270/302	320/350
	125	250/280	275/308	300/336	338/378	400/448
	167	334/374	367/412	401/449	451/505	534
	250	500/560	550/616	600/668	668	668
	333	668	668	668	668	668
	416	833/900	833/900	833/900	833/900	833/900
7620	38	50/56	55/62	60/67	68/76	80/90
	57	75/84	82/92	90/101	101/113	120/134
	76	100/112	110/123	120/134	135/151	160/179
	114	150/168	165/185	180/202	203/227	240/269
	167	219/245	241/270	263/294	296/331	350
	250	328/367	361/404	394/441	443/496	525/534
	333	438/491	482/540	526/589	591/662	668
	416	548/614	603/668	658/668	668	668
	500	656/668	668	668	668	668
	667	875/900	875/900	875/900	875/900	875/900
	833	1093/1224	1093/1224	1093/1224	1093/1224	1093/1224
13800	69	50/56	55/62	60/67	68/76	80/90
	138	100/112	110/123	120/134	135/151	160/179
	207	150/168	165/185	180/202	203/227	240/269
	276	200/224	220/246	240/269	270/302	320/350
	552	400/448	440/493	480/538	540/605	640/668
14400	72	50/56	55/62	60/67	68/76	80/90
	144	100/112	110/123	120/134	135/151	160/179
	288	200/224	220/246	240/269	270/302	320/350
	333	231/259	254/285	277/310	312/349	370/414
	416	289/324	318/356	347/388	390/437	462/518
	432	300/336	330/370	360/403	405/454	480/534
	500	347/389	382/428	416/466	468/525	555/622
	576	400/448	440/493	480/538	540/605	640/668
	667	463/519	509/570	556/622	625/668	668
	833	578/647	636/668	668	668	668
19920	50	25/28	28/31	30/34	34/38	40/45
	100	50/56	55/62	60/67	68/76	80/90
	200	100/112	100/123	120/134	135/151	160/179
	333	167/187	184/206	200/224	225/253	267/299
	400	200/224	220/246	240/269	270/302	320/350
	500	250/280	275/308	300/336	338/378	400/448
	667	335/375	369/413	402/450	452/507	536/600
	833	418/468	460/515	502/562	564/632	668

* 55/65ºC rise rating on VR-32 regulators gives an additional 12% increase in capacity if the tap changer's maximum current rating has not been exceeded.

Settings other than those with stops are not recommended. Limit switch settings are graduated to 1¼-% steps. The raise and lower limits need not be the same value.

ADD-AMP Capacity

The ADD-AMP feature of VR-32 regulators allows increased current capacity by reducing the regulation range. Each unit can have five possible load-current ratings. Refer to Table 2 for consideration when specifying the proper regulator for a particular application.

CURRENT TRANSFORMER APPLICATIONS

All VR-32 regulators are designed with a current transformer (internal toroidal coil) as standard equipment. The current transformer is used for line-drop compensation and metering devices. Table 3 gives the primary current ratings of the current transformers that are used on the regulator.

Table 3
Current Transformer Applications

Regulator Current Ratings	C.T. Primary Current
25	25
50	50
75	75
100	100
150	150
167, 200	200
219, 231, 250	250
289, 300	300
328, 334, 347, 400	400
418, 438, 463, 500	500
548, 578, 656, 668	600
833, 875, 1000, 1093	1000
1332, 1665	1600

SYSTEMS CONNECTIONS

A regulator can regulate a single-phase circuit, or one phase of a three-phase wye or delta circuit. Two regulators connected phase-to-phase in open-delta, or three regulators connected phase-to-phase in closed-delta, can regulate a three-phase, three-wire delta or four-wire wye circuit. When connected in wye, three regulators can regulate a three-phase, four-wire, multi-grounded-wye circuit. Three regulators cannot be connected in wye on three-phase, three-wire circuits because of the probability of neutral shift. Typical connection diagrams are illustrated in Figure 6.

CAUTION
Source (S), Load (L) and Neutral (SL) designation of bushings are permanently welded on the cover. Check before connecting regulator to line.

NOTE: Individual switches are shown for the bypass and disconnect functions. However, a McGraw-Edison regulator-bypass-disconnect switch can be used in each phase to perform the bypassing and disconnecting operations in sequence. Each of these switches replaces one bypass and two disconnect switches shown in the diagrams. Before closing the bypass switch the regulator must be on NEUTRAL and the control switch set on OFF.

MOUNTING

A regulator can be mounted on a pole, crossarm or platform. Regulators are normally provided with either pole mounting brackets or a station platform, according to the rating. This information is available in Table 7 page 44 by noting the suffix to the kVA. A McGraw-Edison elevating structure (Figure 7) can be used to simplify substation installation of regulators requiring a specific live part-to-ground clearance. This structure is built to customer specifications.

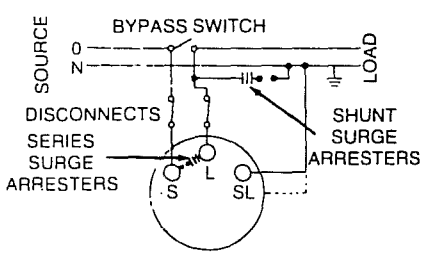

REGULATING A SINGLE-PHASE CIRCUIT.

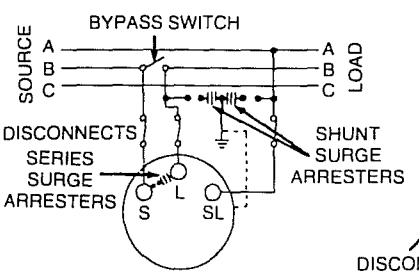

REGULATING ONE PHASE OF A 3-PHASE, 3-WIRE CIRCUIT.

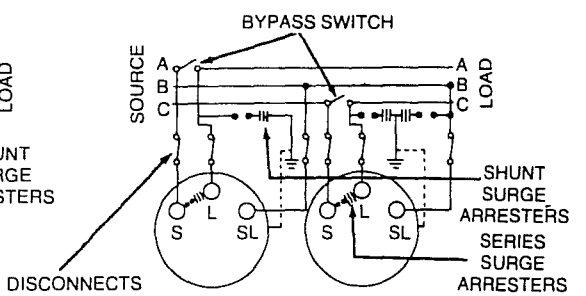

REGULATING A 3-PHASE, 3-WIRE WYE OR DELTA CIRCUIT WITH TWO REGULATORS.

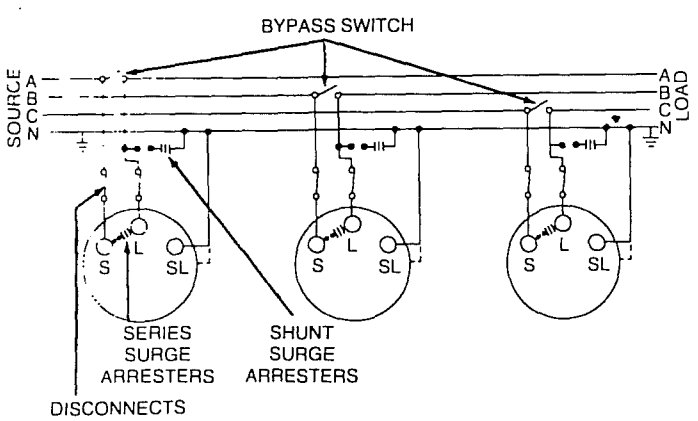

REGULATING 3-PHASE, 4-WIRE, MULTI-GROUNDED WYE CIRCUIT WITH THREE REGULATORS.

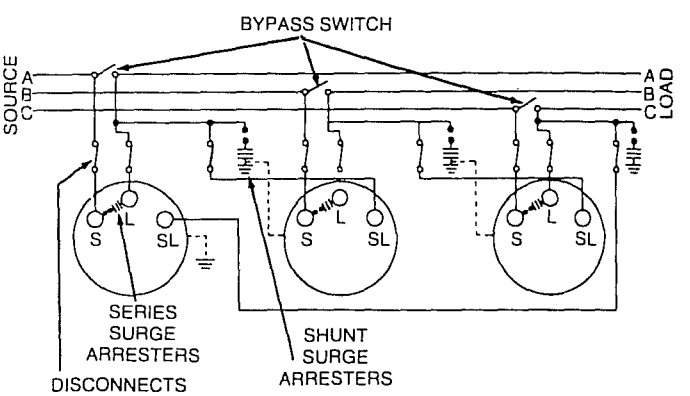

REGULATING A 3-PHASE, 3-WIRE DELTA CIRCUIT WITH THREE REGULATORS.

Figure 6.
Typical connections diagrams.

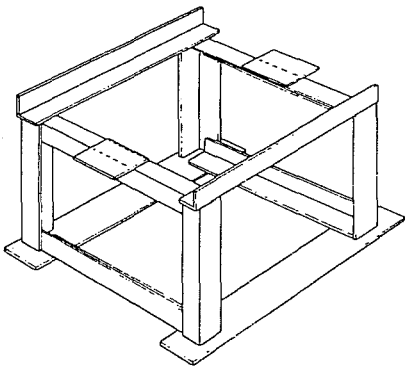

Figure 7.
Elevating structure.

The regulator control can be mounted on the regulator tank, or at a point remote from the unit. Rubber-covered cable is available in lengths of 15, 20, 25, 30, and 35 ft. for interconnection between the control and the regulator.

CAUTION
The control cabinet must be solidly grounded from a tap off of the regulator tank ground. The ground lug on the outside of the control cabinet should be used for this purpose.

TAP CONNECTIONS AND VOLTAGE LEVELS

All McGraw-Edison VR-32 regulators have provisions for operation at system voltages lower than the nameplate rating. Operation at certain system voltages may require changes in connections inside the tank as well as inside the control. Table 4 shows the various system voltages that can be applied on VR-32 regulators. Operation at system voltages lower than the nameplate rating requires an appropriate reduction in kVA loading directly proportional to the reduction in system voltage. Current-carrying capacity remains the same as the nameplate rating.

A potential source is provided to sense the load voltage. It may be a winding on the main core-and-coil assembly, a separate potential transformer or a combination of both.

The potential source is fed through a visible disconnect on the rear panel. The disconnect isolates the control completely from the potential winding. The supply from the potential winding feeds a fine-adjustment ratio-correcting transformer (RCT) that is mounted on the rear panel. The ratio-correcting transformer is tapped at 104, 110, 115, 120, 127, and 133 volts to provide the fine voltage adjustment, (as shown in Figure 8). This source is then fed to the double-pole, double-throw, three-position internal/off/external power supply switch.

This source is tapped to provide coarse adjustment of ratio correction

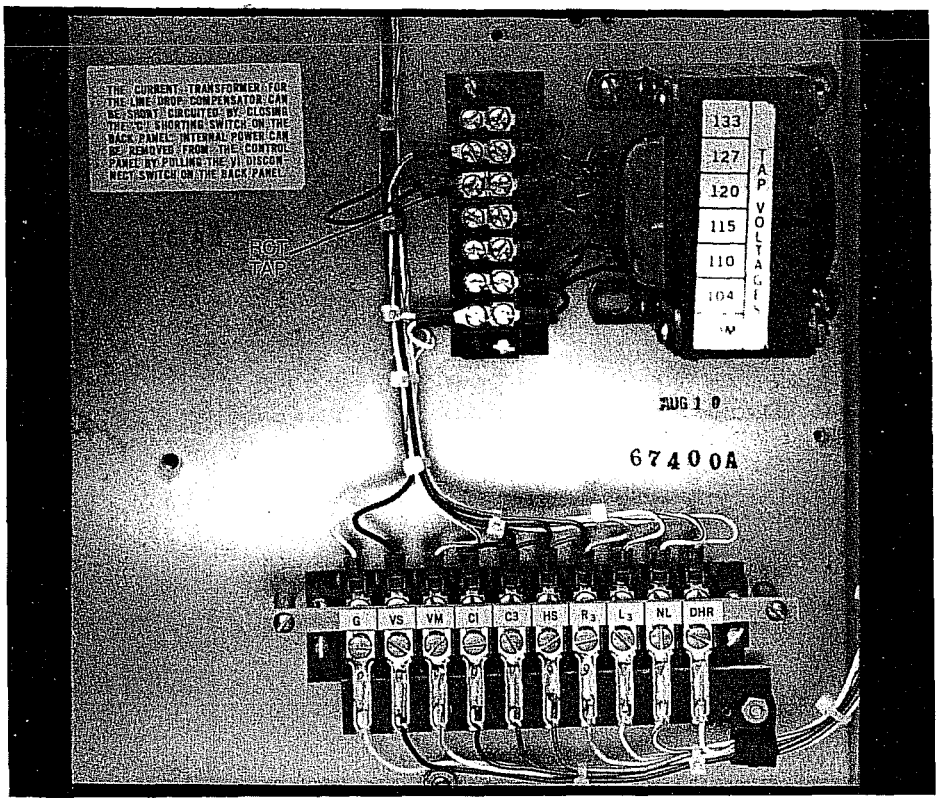

Figure 8.
RCT 1.

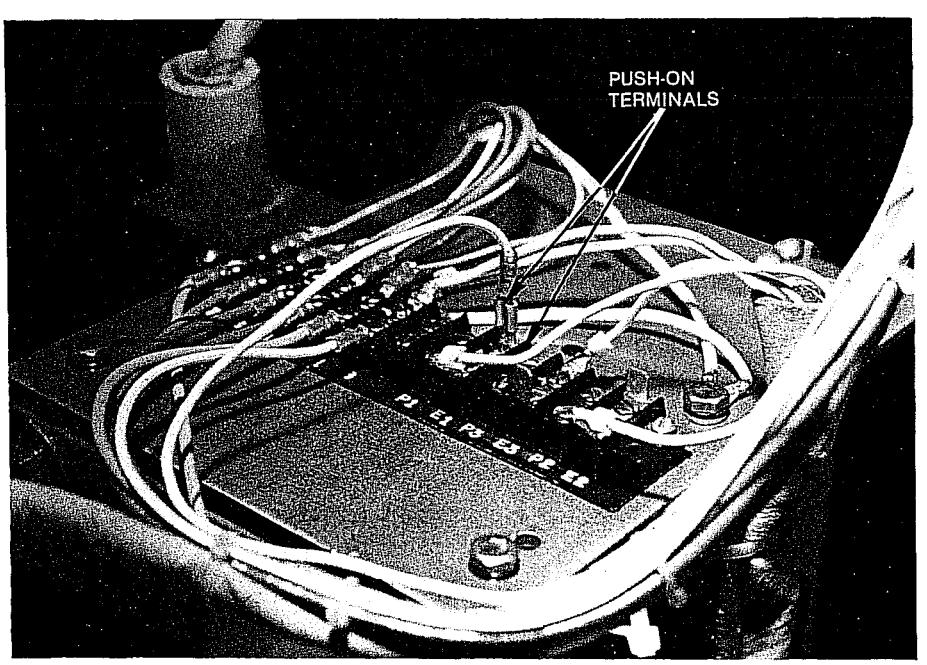

Figure 9.
Internal tap terminals.

when major voltage changes are made. The taps — accessible through the handhole — are under oil and connections are made with push-on type terminals. See Figure 9.

For example, a nominal voltage of 7620 volts has a 60:1 potential ratio (optimum for 7200 volts) on the main potential winding. Taps, under the handhole cover, also provide 4800 volts (40:1) and 2400 volts (20:1). The fine adjustment ratio correcting transformer in the control will offer 120 volts at 7620 volts and 7970 volts by tap selection. This will allow the same programming for 2400, 4800, 7620, and 7970 volts. See Table 4.

The following is how system voltage can be calculated for ANY SVR on any suitable svstem.

$$\frac{\text{(A) System Voltage}}{\text{(B) Internal PT Ratio}} \times \frac{120}{\text{(C) RCT Tap Voltage}} = \text{(D) Control Voltage Setting}$$

A. Normal system voltage applied between L and SL bushings. Listed in column 2 of Table 4.
B. Indicated on all SVR nameplates or in column 4 of Table 4.
C. Voltage listed by the tap on RCT. Either 104, 110, 115, 120, 127 or 133 volts as listed in column 5 of Table 4.
D. This is normally 120 volts, but this calculation provides the value. Place control set voltage on this value listed in column 6 of Table 4 to get regulation to exact nominal system voltage (A).

CONNECTING A REGULATOR INTO SERVICE

Regulators can be placed in service without interrupting load continuity.

CAUTION
The regulator tap changer must be on neutral during energization; otherwise, part of the series winding will be shorted.

Table 4
VR-32 Tap Connections and Voltage Levels

Regulator Voltage Rating 1	Nominal Single-Phase Voltage 2	Ratio Adjusting Data Internal Tap* 3	PT Ratio 4	RCT Tap 5	Overall Nominal Control Setting** 6	Overall Potential Ratio ** 7
2500	2500	—	20:1	120	125	20:1
	2400	—		120	120	20:1
5000	5000	E1/P1	40:1	120	125	40:1
	4800	E1/P1		120	120	40:1
	4160	E1/P1		104	120	34.7:1
	2400	E2/P2	20:1	120	120	20:1
7620	7970	E1/P1	60:1	133	120	66.5:1
	7620	E1/P1		127	120	63.5:1
	7200	E1/P1		120	120	60:1
	4800	E2/P2	40:1	120	120	40:1
	4160	E2/P2		104	120	34.7:1
	2400	E3/P3	20:1	120	120	20:1
13800	13800	E1/P1	115:1	120	120	115:1
	13200	E1/P1		115	120	110:1
	12000	E1/P1		104	120	100:1
	7970	E2/P2	57.5:1	133	125	63.5:1
	7620	E2/P2		133	120	63.5:1
	7200	E2/P2		120	125	57.5:1
	6900	E2/P2		120	120	57.5:1
14400	14400	E1/P1	120:1	120	120	120:1
	13800	E1/P1		115	120	115:1
	13200	E1/P1		110	120	110:1
	12000	E1/P1		104	115	104.4:1
	7970	E2/P2	60:1	133	120	66.5:1
	7620	E2/P2		127	120	63.5:1
	7200	E2/P2		120	120	60:1
19920	19920	E1/P1	166:1	120	120	166:1
	14400	E2/P2	120:1	120	120	120:1
	13800	E2/P2		115	120	115:1
	13200	E2/P2		110	120	110:1
	12000	E2/P2		104	115	104.4:1
	7970	E3/P3	60:1	133	120	66.5:1
	7620	E3/P3		127	120	63.5:1
	7200	E3/P3		120	120	60:1

* P taps are used with E taps only on regulators where an internal potential transformer is used in conjunction with the control winding to provide voltage supplies to the control.See nameplate for verification of this type of control supply.
** Nominal control settings and overall potential ratio may vary slightly from one regulator to another. See the regulator nameplate for determining the exact values.

Always assume that the regulator is off neutral, and if the following steps are taken, no connection problems should occur. Procedure I should be followed when one bypass switch and two disconnect switches are used. Procedure II should be followed when the McGraw-Edison regulator-bypass-disconnect switch is used.

Procedure I: One Bypass Switch and Two Disconnect Switches

1. Verify, from the regulator nameplate, that the control circuit is connected for the proper regulated load voltage.
2. Set the CONTROL switch to OFF.
3. Set the POWER switch to OFF.
4. Check the DISCONNECT switches on the back panel. V_1 (potential switch) should be closed (PUSHED IN), while C (CT shorting switch) should be open (PULLED OUT). See Figure 10.
5. Close the SOURCE-LOAD (SL) disconnect switch. (Delta application only).
6. Close the SOURCE (S) disconnect switch.
7. Set the POWER SWITCH to INTERNAL.
8. Set the CONTROL switch on RAISE or LOWER, to operate the tap changer to the NEUTRAL position. When on neutral, the NEUTRAL LAMP will glow and the POSITION INDICATOR will point to zero.
9. Set the CONTROL switch to OFF.
10. Close the LOAD (L) disconnect switch.
11. Open the BYPASS switch.
12. Set the CONTROL switch to AUTO.
13. Set the VOLTAGE SETTING to call for one step of voltage correction.
14. If satisfactory, call for one step of voltage correction in the opposite direction.
15. If both operations are satisfactory, set the VOLTAGE SETTING control at the desired level.

Procedure II: McGraw-Edison Bypass Disconnect Switch

1. Verify, from the regulator nameplate, that the control circuit is connected for the proper regulated-load voltage.
2. Set the CONTROL switch to OFF.
3. Set the POWER switch to EXTERNAL.
4. Check the DISCONNECT switches on the back panel. V_1 (potential switch) should be open (PULLED OUT), while C (CT shorting switch) should be closed (PUSHED IN). See Figure 10.
5. Apply 120 volts to the EXTERNAL SOURCE terminals.

6. Set the CONTROL switch on RAISE or LOWER, to operate the tap changer to the NEUTRAL position. When on neutral, the NEUTRAL LAMP will glow and the POSITION INDICATOR will point to zero.
7. Set the CONTROL switch to OFF.
8. Remove the 120 volts from the EXTERNAL SOURCE terminals.
9. Place the POWER switch on INTERNAL.
10. V_1(potential switch) should be PUSHED IN, while C (CT shorting switch) should be PULLED OPEN.
11. Close the SOURCE-LOAD (SL) disconnect switch. (Delta application only.)
12. Close the REGULATOR-BYPASS disconnect switch.
13. Set the CONTROL switch to AUTO.
14. Set the VOLTAGE SETTING to call for one step of voltage correction.
15. If satisfactory, call for one step of voltage correction in the opposite direction.
16. If both operations are satisfactory, set the VOLTAGE SETTING control at the desired level.

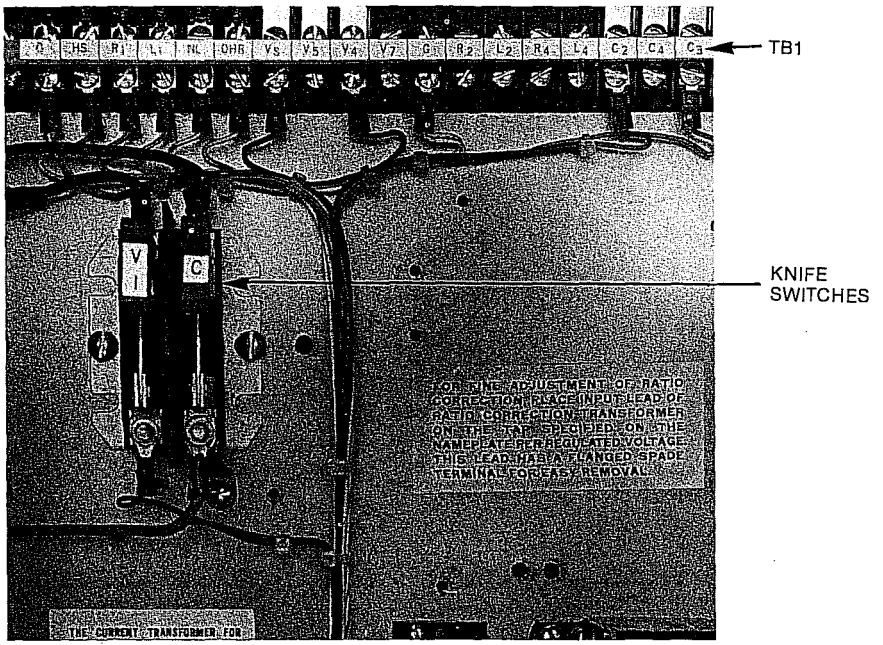

Figure 10
Knife switches and TB1.

MAINTENANCE PROGRAM

The recommended maintenance program includes occasional operational checks in the field, and a periodic inspection of all major regulator components in a service center where untanking is practical.

Duty and operating cycles of regulators vary, depending upon locations in the system. The number of complete inspections and the occasional operational checks should, therefore, be predicted upon the duty and operating cycles of each individual regulator.

Routine Inspections

1. After six months, a sampling of the oil in the regulator should be taken and a dielectric test made in a standard test cup. If the oil tests below 26 kV, it should be filtered, or replaced with reconditioned oil. The oil should be tested again after one year of regulator operation. A periodic schedule for sampling and testing the oil should then be established.
2. The tap changer sustains the greatest amount of mechanical duty of all the components in a VR-32 regulator, and therefore requires routine inspection. After four years or 100,000 operations, whichever comes first, the regulator should be removed from service for inspection. At that time, appraisal should be made of the condition and wear of both the movable and stationary contacts. From this appraisal it should be possible to set up a schedule for periodic inspection.

REMOVING A REGULATOR FROM SERVICE

WARNING
Bypassing a regulator off neutral will short part of the series winding and be very hazardous both to the lineman and the regulator.

If the regulator is on neutral, the regulator can be safely removed from service without interrupting load continuity. It is wise to employ more than one method to determine whether a regulator is on neutral.

Method I - Neutral Light Method

1. Use the control to RAISE or LOWER the regulator until it is in the neutral position.
2. When on NEUTRAL, the NEUTRAL LAMP will light and the POSITION INDICATOR will point to zero.
3. To stop the regulator on the neutral position, the CONTROL switch should be turned to OFF during the switching operation from position "1" to position zero. Switching to OFF prior to reaching the neutral position prevents overshoot.

CAUTION
Always use the CONTROL switch to operate the regulator. Do not use the power switch for this function.

Method II-Audible Count Method

1. Use the CONTROL switch to run the tap changer to full RAISE or LOWER. Audible clicks will be heard with each tap changer operation.
2. Now run the TAP CHANGER to the opposite end of its range and count the number of operations. Exactly 32 operations should be heard.
3. Reverse the TAP CHANGER direction again and count exactly 16 operations. Anticipate the 16th operation by turning the CONTROL switch to OFF, approximately one second after the 15th operation. This will prevent overshoot. The regulator is now on the neutral position.

Method III - Longhorn Method

The longhorn method was developed by an eastern utility and is effective, if the user is aware of its limitations. The device is illustrated in Figure 11, and can be easily constructed in a service shop.

WARNING
Care must be exercised to avoid contact between live parts and ground.

1. The LONGHORN DEVICE is attached to a hot stick.
2. One HORN is touched to the SOURCE bushing terminal and the other HORN is touched to the LOAD bushing terminal. When the regulator is on NEUTRAL there is no voltage difference between the two bushing terminals, and the lamps will not glow.

The longhorn method limitations become apparent when considering the voltages to be detected. Table 5 shows the voltage existing between the two bushing terminals when the tap changer is one step off neutral. The farther from neutral, the brighter the light will glow (e.g. at step 16 the voltage will be 10% of line voltage). Bulbs, fuses, or bulb-fuse combinations should be selected to permit detection of the voltages shown. Note that the voltage is doubled when the differential is two tap positions. The horns should be adjusted to make sure that there is no chance of shorting between the S and L bushings.

DEENERGIZING THE REGULATOR

Once it has been established that the regulator is on neutral, immediately proceed with the following steps:

1. Turn CONTROL switch to OFF.
2. Close the BYPASS switch.
3. Open the SOURCE (S) disconnect switch.
4. Open the LOAD (L) disconnect switch.
5. Open the SOURCE-LOAD (SL) disconnect switch. (Delta application only).

NOTE: If the McGraw-Edison regulator bypass disconnect switch is used, Steps 2, 3 and 4 are carried out in one operation.
If it is impossible to return the regulator tap changer to neutral, the feeder should be deenergized, the regulator bypassed, and then removed from the line.

The following is an extreme emergency procedure if the feeder cannot be deenergized.

1. Connect a FUSE CUTOUT large enough to carry the line current across the SOURCE (S) disconnect switch.
2. Close the FUSE CUTOUT.
3. Open the SOURCE (S) disconnect switch.
4. Close the BYPASS switch (fuse will blow).
5. Open the LOAD (L) disconnect switch.
6. Open the SOURCE-LOAD (SL) disconnect switch. (Delta application only).
7. Disconnect and remove the FUSE CUTOUT.

UNTANKING

1. Manually run the tap changer to neutral, if possible. If not possible, note position indicator reading be-before proceeding to untank.
2. Remove the two mounting bolts holding the control cabinet to the tank.
3. Remove the series arrester.
4. Free cover by removing clamping ring or cover bolts.
5. Attach sling or hooks with spreader bar (Figure 12) to lifting eyes and raise the cover, with the attached core-and-coil assembly, until the top of the coil is approximately one inch under oil. The control cabinet should be guided to avoid snagging during lifting.

CAUTION
Before untanking a fan-cooled regulator the oil level must be lowered below the thermometer. The thermometer well must then be removed. Failure to follow this procedure will cause damage to these parts.

It is recommended that the main core-and-coil assembly never be removed from the oil, except when a winding failure occurs. Blocking between the cover and tank lip should be employed to suspend the core-and-coil assembly within the oil until inspection of the tap changer or other maintenance is complete.

Retanking

Retank the regulator as follows:

1. Be sure the position indicator shows the present position of the tap changer. If not, hold the end of the indicator cable while loosening the set screws at the bottom of the indicator shaft. Rotate the indicator shaft until the proper position is reached, then tighten the set screws. In early 1986, this fine adjustment joint was moved to the back of the position indicator in the junction box. Verify coordination of position incator with tap changer in neutral position (control neutral light on).

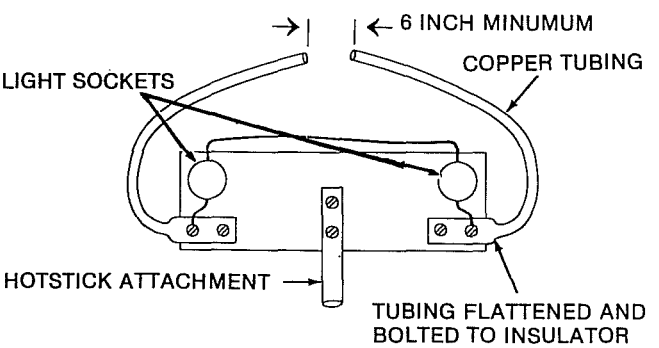

Figure 11.
Longhorn method.

Table 5
Voltage Between S and L Bushings One Step Off Neutral

Operating Voltage (kV)	2.5	5.0	7.6	13.8	14.4	19.9
Step Voltage (volts)	15	30	47	86	90	124

2. Check the gasket seat surfaces on the cover and tank, and wipe clean. Wipe the gasket and position it on the tank lip. Loosen horizontal side channel bolts to insure proper seating of regulator in tank and cover seal.
3. Raise the cover assembly and attached components over the tank. Make certain of proper orientation.
4. Lower the unit, positioning the channels into the tank guides. Guide the control cabinet onto its brackets.
5. Seat the unit in the tank. Tighten the cover clamps or bolts and replace the control mounting bolts.
   NOTE: Tap the cover with a rubber hammer around the edge to properly seal the gasket while tightening the cover band.
6. Check and retighten horizontal side channel bolts through handhole, if required.

CL-2 REGULATOR CONTROL

All indicating, programming, and operating controls are mounted on the front panel (Figure 13). All indicators (neutral light, band-limit indicators, and operations counter) are located in the center top of the panel where they remain visible when the control is checked or programmed. All programming controls, such as bandwidth, voltage setting, time delay, and line-drop compensation resistance and reactance are grouped in the upper section of the control panel. All operating controls such as the control switch, test rheostat, LDC control, motor fuse, panel fuse, position indicator drag hand reset, internal/external power switch, voltmeter terminals, and external source terminals are grouped in the lower section of the control panel. The separation of programming controls and operating controls in this manner allows an operational check of the control without disturbing the program settings.

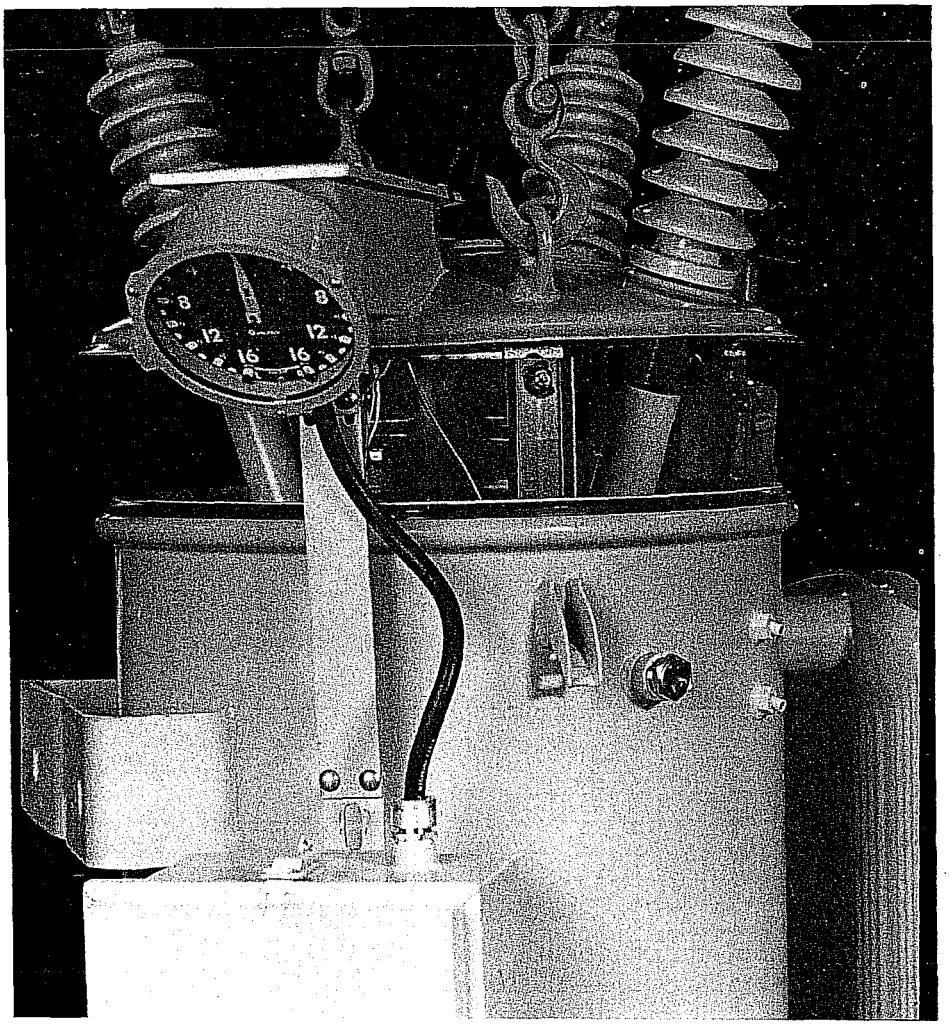

Figure 12.
Untanking.

Programming Controls

The bandwidth setting has a range of 1 to 4½ volts in half-volt steps. The incremental-step settings allow for factory selection of resistive components which are properly trimmed initially. The preselection and proper trimming of components provides a control that only requires a one-step and a one-spot calibration.

The voltage setting consists of an incremental coarse adjustment ranging from 105 to 130 volts in five-volt steps, and a continuously adjustable fine setting ranging from 0 to 5 volts. The coarse and fine adjustments combine to offer a number of settings between 105 and 135 volts.

The line-drop compensation resistance setting is continuously adjustable from 0 through 24 volts.

The line-drop compensation reactance settings employ a coarse adjustment in five-volt increments (from 0 to 20 volts), and a fine adjustment in one-volt increments (from 0 through 4 volts) combining to provide a range of 0 to 24 volts in one-volt steps.

The time-delay setting is continuously adjustable over a range of 10 through 120 seconds. It is also provided with a special setting-the unscaled full counterclockwise mark on the panel-that provides a short delay for test purposes.

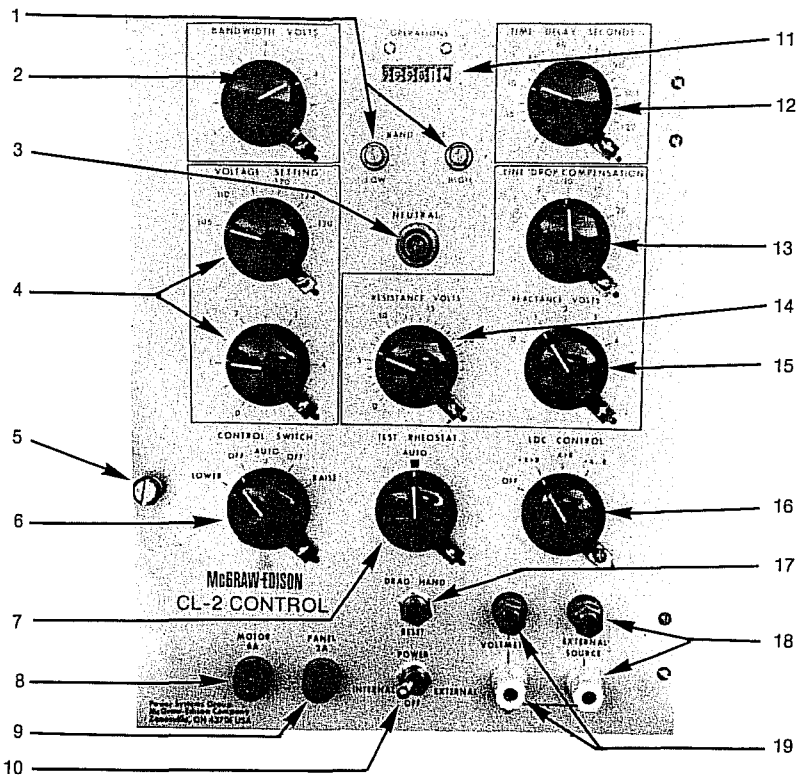

1. Band-Edge Indicators
2. Voltage Bandwidth
3. Neutral Indicating Light
4. Voltage Level
5. Panel-Locking Screw
6. Control Switch
   (5 positions: LOWER, OFF, AUTO, OFF, RAISE)
7. Test Rheostat
8. Motor Fuse
9. Panel Fuse
10. Internal/External Power Switch
11. Operations Counter
12. Time Delay
13. Reactance Volts, Line-Drop Compensator (coarse adjustment)
14. Resistance Volts, Line-Drop Compensator
15. Reactance Volts, Line-Drop Compensator (fine adjustment)
16. Line-Drop-Compensator Control (reactance and resistance polarity adjustment)
17. Drag Hand Reset/ Neutral Light Test Button
18. External Power Terminals
19. Voltmeter Terminals

Figure 13.
Features of the CL-2 control.

Switching Modes

The CL-2 control offers three types of tap changer switching modes that allow the user to select the one that best fits the application. The available switching modes are sequential, non-sequential and voltage averaging.

SEQUENTIAL (STANDARD)

When the load voltage goes out of band, the time-delay circuit is activated and, after the delay, a tap change is initiated. After each tap change, a two-second pause occurs. During this time, if the voltage is still out of band, another tap change occurs. If in band, the timing circuit is reset.

NONSEQUENTIAL

Only one tap change takes place, then the time-delay circuit is reset. It differs from the sequential mode in that a complete time delay is required before another tap change can take place.

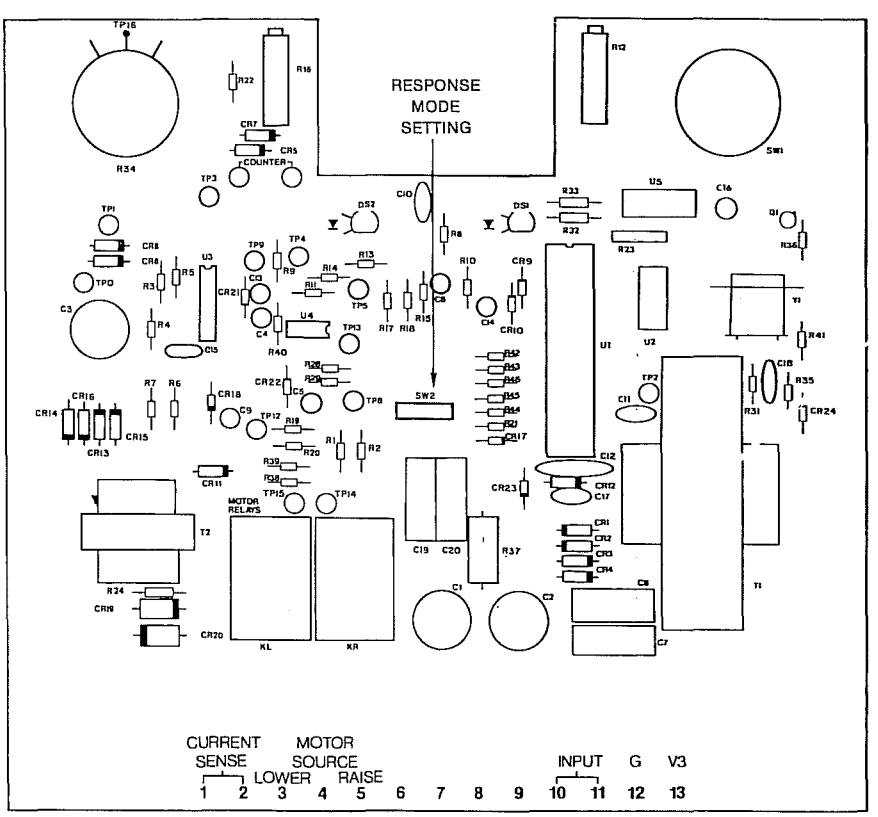

Figure 14.
Dipswitch location on printed circuit board.

VOLTAGE AVERAGING

When the load voltage moves out of band (high or low), the time-delay circuit is activated. The microprocessor then monitors and averages the instantaneous load voltage during the preset time-delay period. The time-delay setting must be 15 seconds or more for the voltage-averaging mode to be active. The microprocessor will compute the number of tap changes required to bring the average voltage back to the set voltage level, then operate the tap changer the necessary number of steps without any delay between them. A maximum of five consecutive tap changes will be allowed in this mode, before the time-delay circuit is reset, to avoid an accumulative error. Unlike the other two modes, the time-delay circuit will not automatically reset when the instantaneous voltage goes in band. However, should the voltage stay in band for at least 10 seconds, the time-delay circuit will reset. An error-averaging characteristic is inherent with the voltage averaging mode.

SETTING THE SWITCHING MODES

A CL-2 control incorporates sequential switching as a standard, but this can easily be changed in the field to the other switching modes. The nonsequential and voltage averaging modes are activated through a set of dipswitches (soldered jumpers on initial units) located near microcomputer U_1 on the printed circuit board (Figures 14 and 15). When the dipswitches are closed, they ground the selected input to the microcomputer, resulting in an alternate program mode (Figures 16 and 17).

If the nonsequential and voltage averaging dipswitch settings are both in the on position, the control will revert to the sequential (standard) response mode. For setting the desired mode of operation, refer to Table 6.

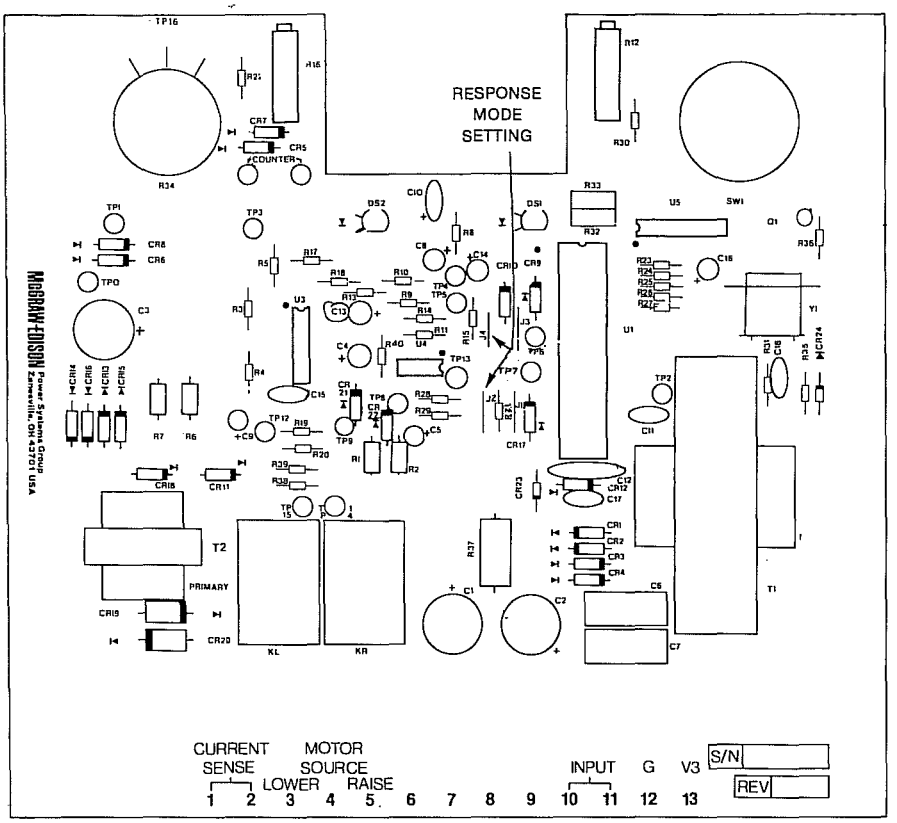

Figure 15.
Soldered jumper location on printed circuit board.

Table 6
Switching Mode Settings

Mode	Dipswitch	Jumper
Sequential	All off	None
Nonsequential	Position 4 On	J4
Voltage Averaging	Position 2 On	J2

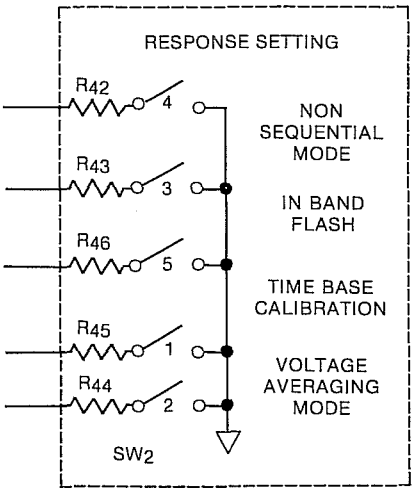

Figure 16.
Dipswitch response setting.

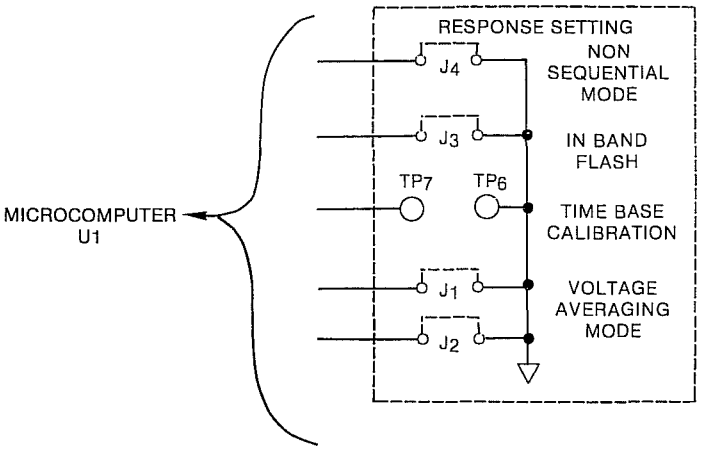

Figure 17.
Jumper response setting.

Operating Controls

The control switch features a lower/off/auto/off/raise position sequence. This is preferred for operational ease. In selecting the automatic mode, it is not necessary to pass from one of the manual positions through another. This eliminates accidental tap changer operations.

The test rheostat offers operating personnel a means of checking the control without disturbing the programmed setting. The test rheostat varies the voltage input to the sensing circuit and also varies the voltage at the voltmeter test terminals.

The LDC control polarity switch provides the necessary settings to employ the regulator in grounded-wye, closed-delta, or open-delta connections utilizing line-drop compensation. In addition, there is an off position to facilitate testing without disturbing the programmed line-drop compensation setting of the control. Refer to *R225-10-1* for line-drop compensation application.

Fuses for the motor and panel circuits are clearly marked 6A and 2A, respectively. Spare fuses are provided within the control cabinet. The fuse holders are panel-mounted for ease of replacement and operational checks.

The drag-hand reset functions in all tap changer positions and also offers a neutral light test for any position other than neutral. The power switch clearly indicates the positions of internal, off, and external. The power switch must not be operated while a tap change is in progress or while the control switch is not in an off position.

The voltmeter and external source terminals are color coded. They are located on the hinge side of the control panel. These precautions minimize the possibility of mishap.

REMOVAL OF CL-2 FRONT PANEL

To open the front panel, unscrew the captive knurled knob on the left side of the panel. With the control open, the printed circuit board and rear panel signal circuit are accessible as shown in Figure 18. This design enables quick field replacement of the control front panel, leaving the rear panel, control cabinet, and cable intact.

1. Swing the control panel out.
2. Pull the V1 disconnect switch open.
3. Push the C shorting switch closed.
4. Loosen the screws on the interconnecting terminal strip (TB2) at the bottom of the rear panel.
5. Drop the fanning strip free (Figure 19).
6. Lift the control panel free of the slip hinges.

NOTE: Care should be taken to prevent damage to the components under the control shelf during the handling.

Replacement of CL-2 Front Panel

To replace the front panel in the control cabinet, follow the procedure outlined below:

1. Engage the front panel on the cabinet hinges.
2. Insert the fanning strip from the front panel wiring harness under the TB2 terminal block screws.
3. Tighten the screws on the interconnecting terminal block (TB2).
4. Pull open the current shorting switch (C).
5. Push closed the V1 disconnect switch.
6. Close the panel and tighten panel locking screw.

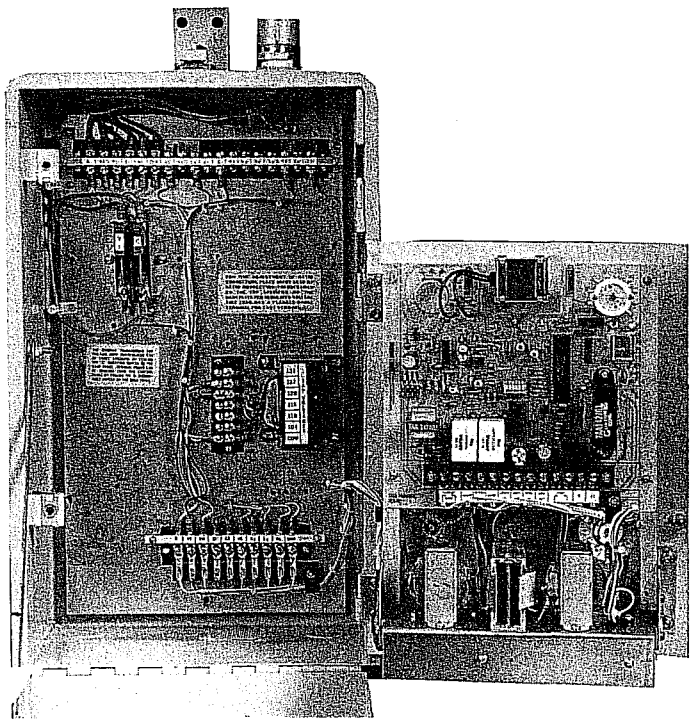

Figure 18.
Printed circuit board and rear panel signal circuit.

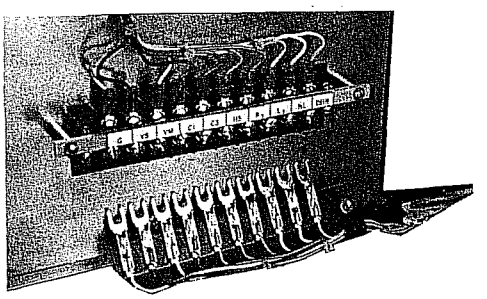

Figure 19.
TB2 and fanning strip disconnect.

SCADA (Supervisory Control and Data Acquisition)

SCADA is a supervisory system used by some utilities for remote control of their system. It is used at all levels of a power system. This section applies to regulator SCADA applications that have seen increased use on distribution systems. McGraw-Edison has prepared a connection scheme to accomodate various functions while at the same time protecting the equipment.

The scheme applies to the following:

1. CL-2 and CL-1.
2. Early CL-1 (with CR relay).

The basic requirement of the McGraw-Edison scheme is the use of the current-relay package. The purpose of the current-relay package is to prevent misapplication of any SCADA scheme, and to work with the holding switch to make sure a tap change is completed once it is started. The scheme uses a current relay to sense when the holding switch is closed. Once the holding switch is closed, the current relay contacts open and prevent any further energization of the tap changer motor, except through the holding switch. When the holding switch opens, the current-relay contacts close, returning control of the tap changer to one of the operational methods of control: auto, manual, or SCADA.

The blocking contact, shown in Figure 20, inhibits automatic or manual operation of the regulator when the SCADA scheme is in operation.

The scheme accommodates the following functions:

1. Raise and lower the tap changer.
2. Block automatic operation.
3. Apply voltage reduction.

Figure 20 shows the basic scheme and the function of the current relay. This general scheme applies to all controls, but the wiring changes necessary to achieve this scheme differ with the different controls.

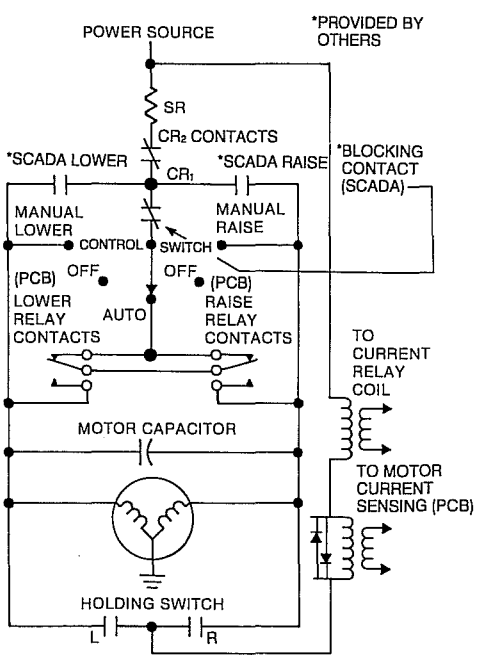

Figure 20.
SCADA connections basic scheme.

The following instructions indicate how to modify the various controls to include the SCADA operating scheme, and how to connect the voltage reduction package into the circuit.

Motor blocking and remote motor operation on CL-series controls.

All CL-series controls, with the exception of some early CL-1 controls, require the installation of the current relay (part 1068). The first step in installing the current-relay circuitry is to carry out the modification of the front panel, shown in Figure 21. Although not strictly essential, it is recommended that the terminal block shown be installed. The modification is indicated by the broad-lined connections.

1. **EARLY CL-1 CONTROLS WITH CURRENT RELAY.**
   A. Disconnect and cut back the blue (raise circuit) leads and the white/green (lower circuit) leads of:
      1. TB1/R1 and L1.
      2. CR assembly/R1 and L1.
      3. CR assembly/R3 and L3.
      4. TB2/R3 and L3.
      Some early CL control labels appear as R and L on both TB1 and TB2. Refer to Figure 22 for proper connection note.
   B. Make the following connections using no smaller than 20-gauge wire:
      1. TB1/R1 to TB2/R3.
      2. TB1/L1 to TB2/L3.
2. **CL CONTROLS WITHOUT THE CURRENT RELAY.**
   A. Install the CR assembly on the rear panel.
   B. Disconnect and cut back the orange harness wire from TB1/HS and TB2/HS.
   C. Connect TB1/HS to CR package/HS1 (for direct-drive tap changer) or HS2 (for spring-drive), using at least 20-gauge wire, as directed in Figure 22.
   D. Connect CR assembly/C to TB2/HS.

   All of the above and any other necessary wiring is shown in Figure 22.

   NOTE: When supervisory motor control is required, the raise and lower output of the SCADA control must be connected to the same terminals of TB1 as the raise and lower leads of the control cable that connects from the control to the regulator. This allows SCADA to override the control and accessories.

Figure 23 is a schematic of the motor control on an early control (CL-1) before modification. Figure 24 shows the motor control schematic after SCADA modification has been made.

The motor control modification allows normal operations of all standard options in normal automatic operation, and provides bypass of motor functions under supervisory control.

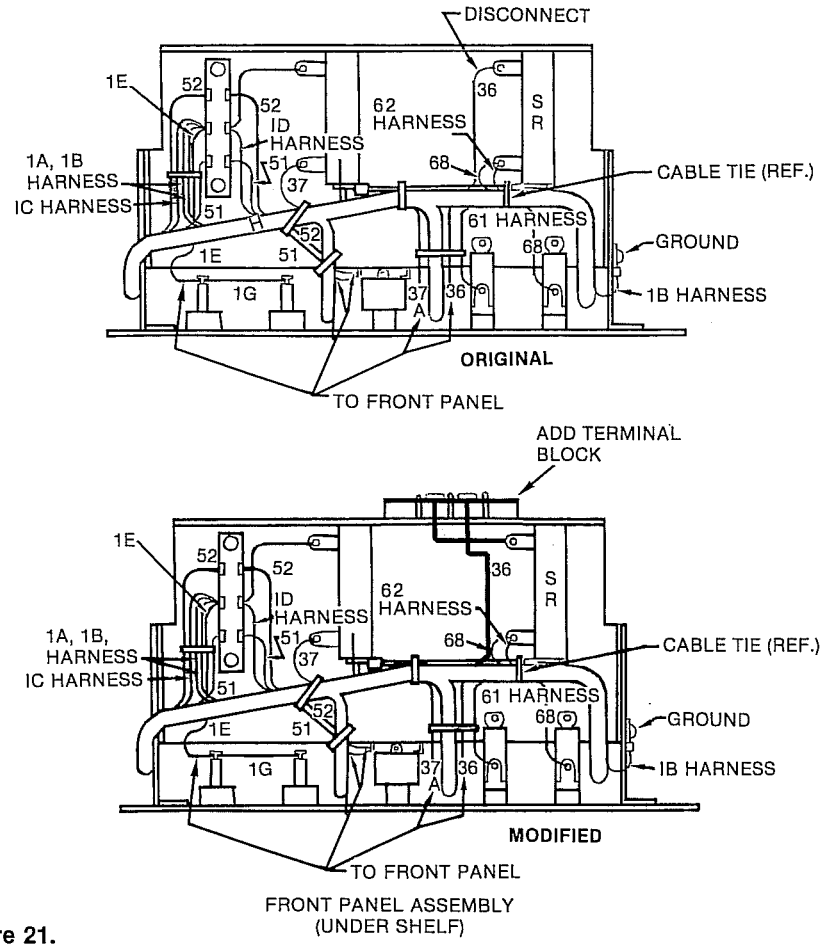

Figure 21.
SCADA modification of front panel assembly.

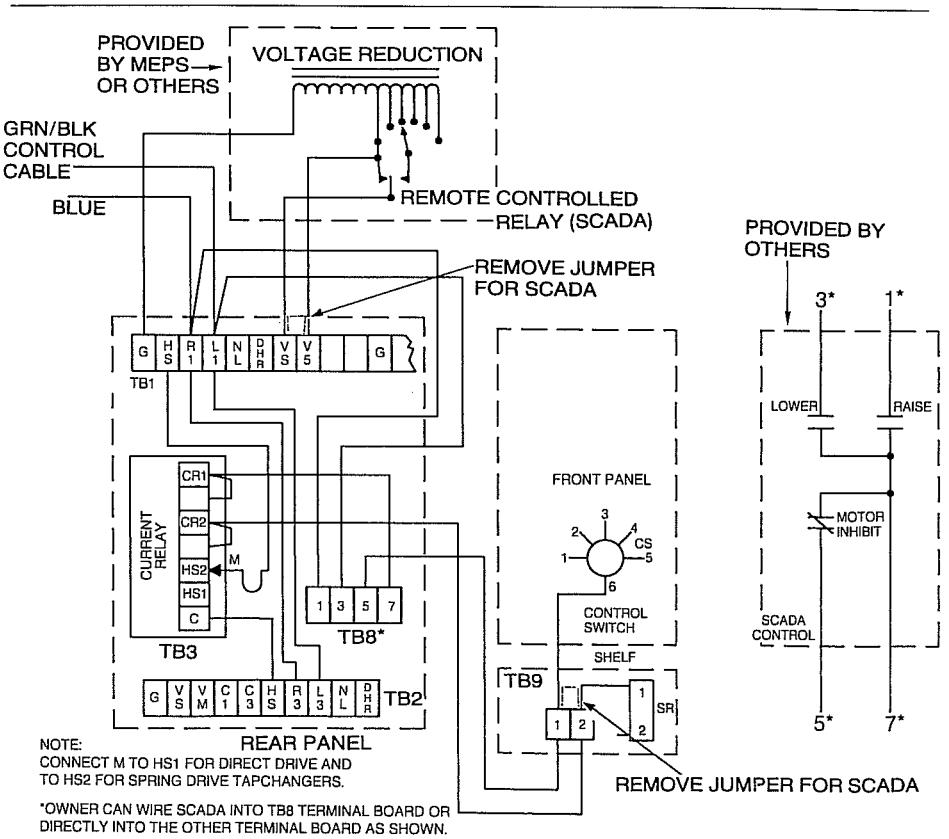

Figure 22.
SCADA connections to CL control.

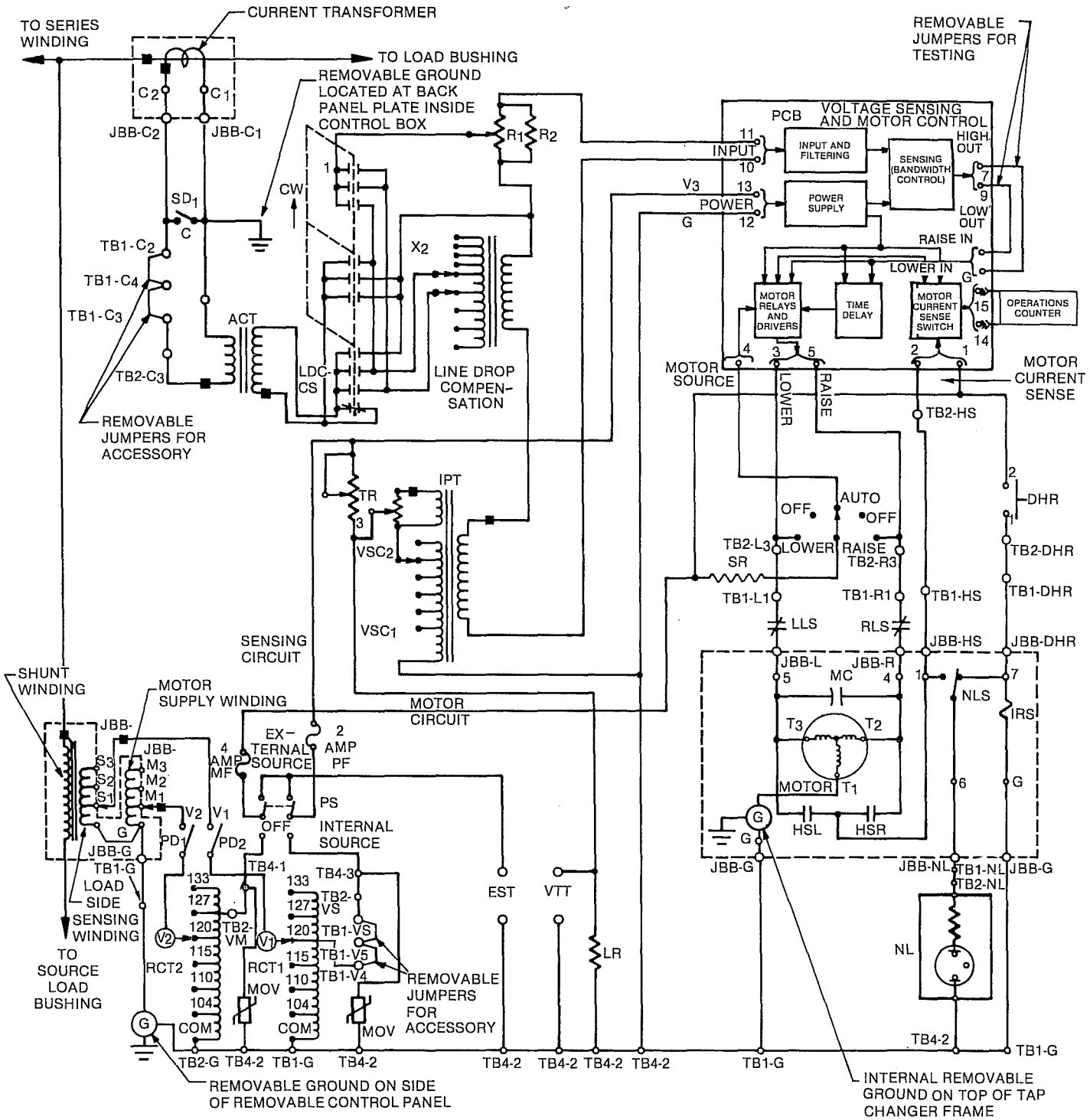

Figure 23.
Standard control for direct- and spring-drive tap changers (1980 CL-1 model).

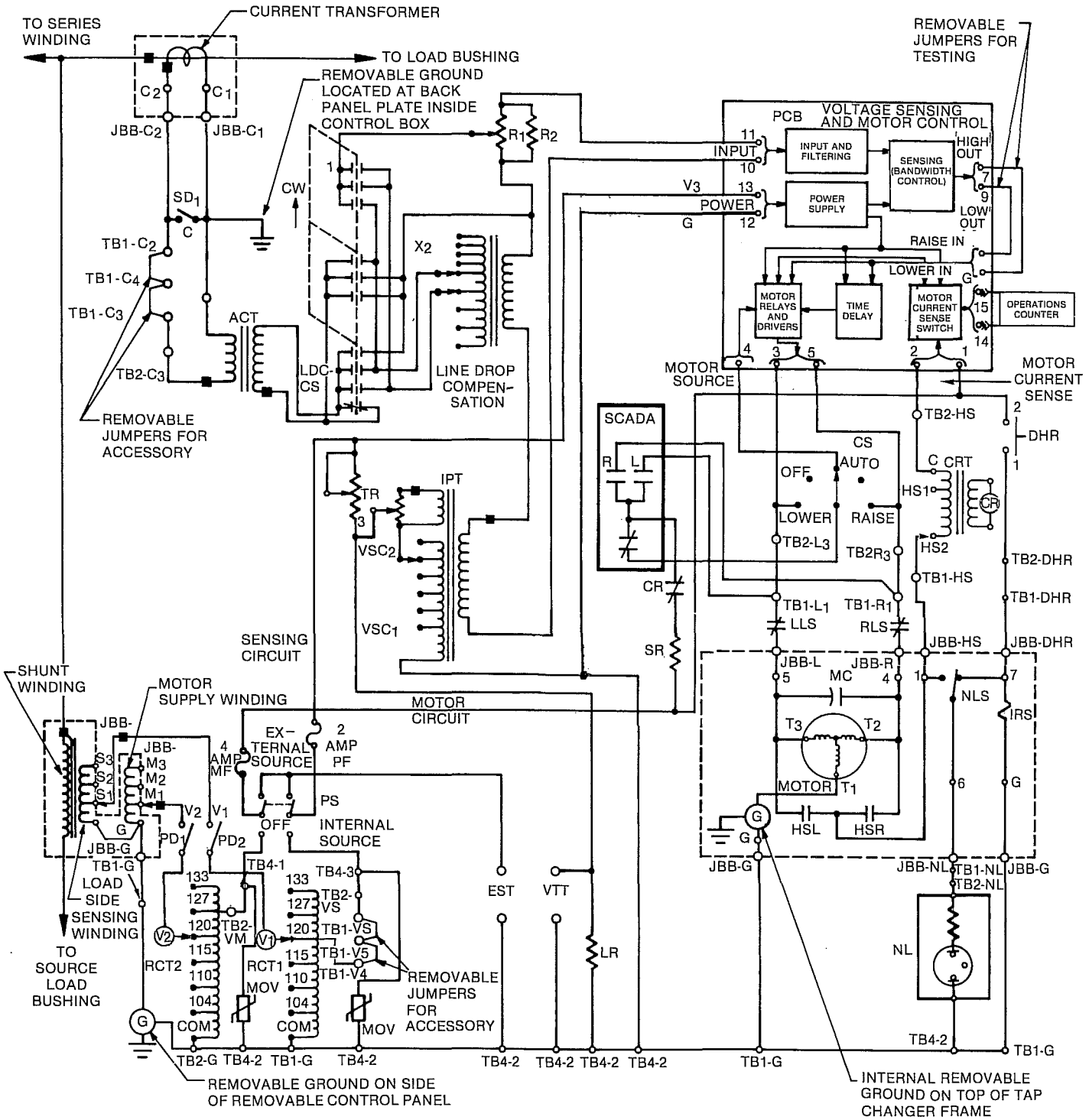

Figure 24.
SCADA modification of regulator control (1980 CL-1 model).

Voltage Reduction

The use of voltage reduction is comcom with SCADA schemes. Figure 25 shows a typical voltage reduction method used. The input voltage to the control is applied between V(in) and common. The output voltage V(out) to common is applied to the sensing circuit. If relay K is energized, V(out) is greater than V(in) and when this increased voltage is applied, the sensing circuit causes the control to lower the voltage by the amount of increase. Various levels of voltage (%) reduction may be selected, depending upon the number and value of each tap on the auto-transformer. The total range is usually 0 to 10%.

NOTE: This discussion assumes that the McGraw-Edison voltage reduction control accessory is not being used, and SCADA equipment is being connected directly to the bare CL-2.

The auto-transformer is used to raise the voltage sensed by the control, thus causing a reduction in the regulator output. All connections are to TB1, assuring proper coordination with other options which exist in the controls. Refer to Figure 22 for proper connections.

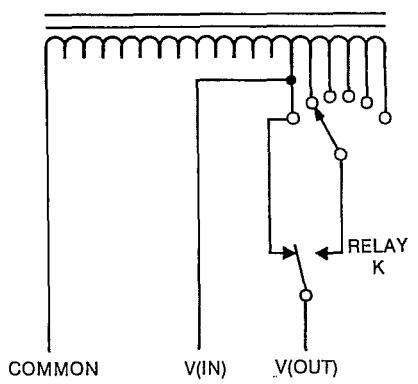

Figure 25.
SCADA voltage reduction.

OPERATION AND SERVICE

This section is divided into two basic parts. The first part is designed to fully acquaint the user with details of the operation of the 32-step regulator including internal construction, control functions and tap changer operation. The second part is a troubleshooting guide for the VR-32 regulator and the CL-2 control.

SYSTEM OPERATION (Part 1)

The overall system schematic (Figure 26) will be illustrated in segments to aid in the understanding of the operation of the VR-32 regulator and CL-2 control.

Control Power

The control winding, series-winding potential transformer, potential knife switch, fine-adjusting ratio-correction transformer, metal-oxide varistor arresters, internal/external power switch, panel fuses, and external source supply terminals are shown in Figures 27, 28, and 29.

The control power supply windings are tapped to provide coarse adjustment of ratio correction. The taps are accessible through the handhole on the regulator cover at the terminal board (TCB) located on top of the tap changer under oil. Push-on terminals are provided for these control winding and series winding potential transformer taps. Refer to Figure 9 for location of terminal taps.

These adjustable large-step ratio-correction leads are identified by the letters "E" control winding adjustment and if present, "P" series winding potential transformer adjustment. Output lead E is connected to E_1, E_2, or E_3, while output lead P is located on corresponding P_1, P_2, or P_3. The potential source is then fed through the visible disconnect knife switch (V1) on the rear panel. The output is fed into a fine-adjustment ratio-correcting transformer RCT1. The tap lead that is moved is the longest lead going to the transformer and has a spade (open-end) terminal. Refer to Figure 8.

Refer to the nameplate (Figure 30) on the control box door to find the correct taps (coarse and fine) for the regulated load voltage.

Two outputs are taken off of the ratio correction transformer-one for the sensing circuit supply (VS) and the other for the tap changer motor circuit supply (VM). These two potential sources are then fed to the double-pole, double-throw, three-position (internal/off/external) power supply switch. Metal-oxide varistor arresters are provided for surge protection of each circuit.

The motor circuit is fused at six amps and the sensing circuit is fused at two amps. External source terminals are provided to operate the regulator from an external voltage supply. With the power switch in the external position, the internal supply is disconnected to prevent accidental energization of the high-voltage bushings and the rear panel signal circuit.

Manual Operation

The tap changer motor and associated circuitry-including the motor supply bus, series resistor (SR), control switch (CS), limit switches (LLS and RLS) and reset solenoid (IRS) located in position indicator, capacitor (MC), motor, holding switch contacts (HSL, HSR), neutral light switch (NLS), neutral light (NL), and drag hand reset (DHR)-are shown in Figures 31 and 32. The motor supply bus provides power for the tap changer motor. Setting the control switch on lower, the power is fed through the series resistor, control switch, and the lower limit switch, to the motor and capacitor. The cam of the energized motor begins to turn, closing the holding switch contact HSL.

When the contact HSL is closed by the cam an alternate 120-volt source provides power to the motor. This alternate source is fed through the printed circuit board in the motor current sense section which will be described later. It then feeds through the holding switch contact, HSL, to the motor and capacitor. Raise operations are identical to lower operations involving only those components for that part of the circuit. The holding switch assures that a tap change in process will be completed.

CAUTION
Always use the CONTROL switch to operate the regulator. Do not use the power switch for this function.

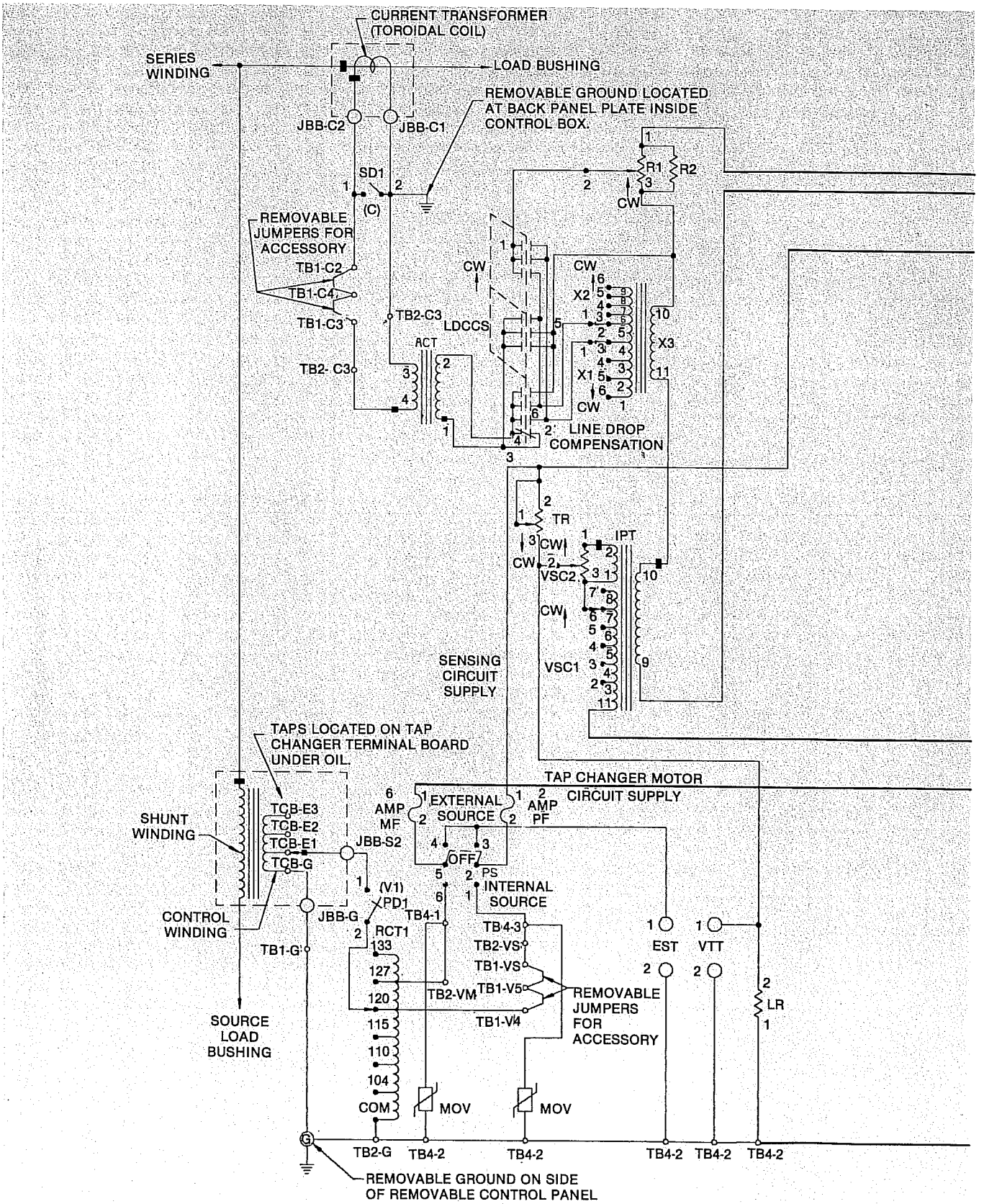

Figure 26.
VR-32 regulator and CL-2 control wiring schematic.

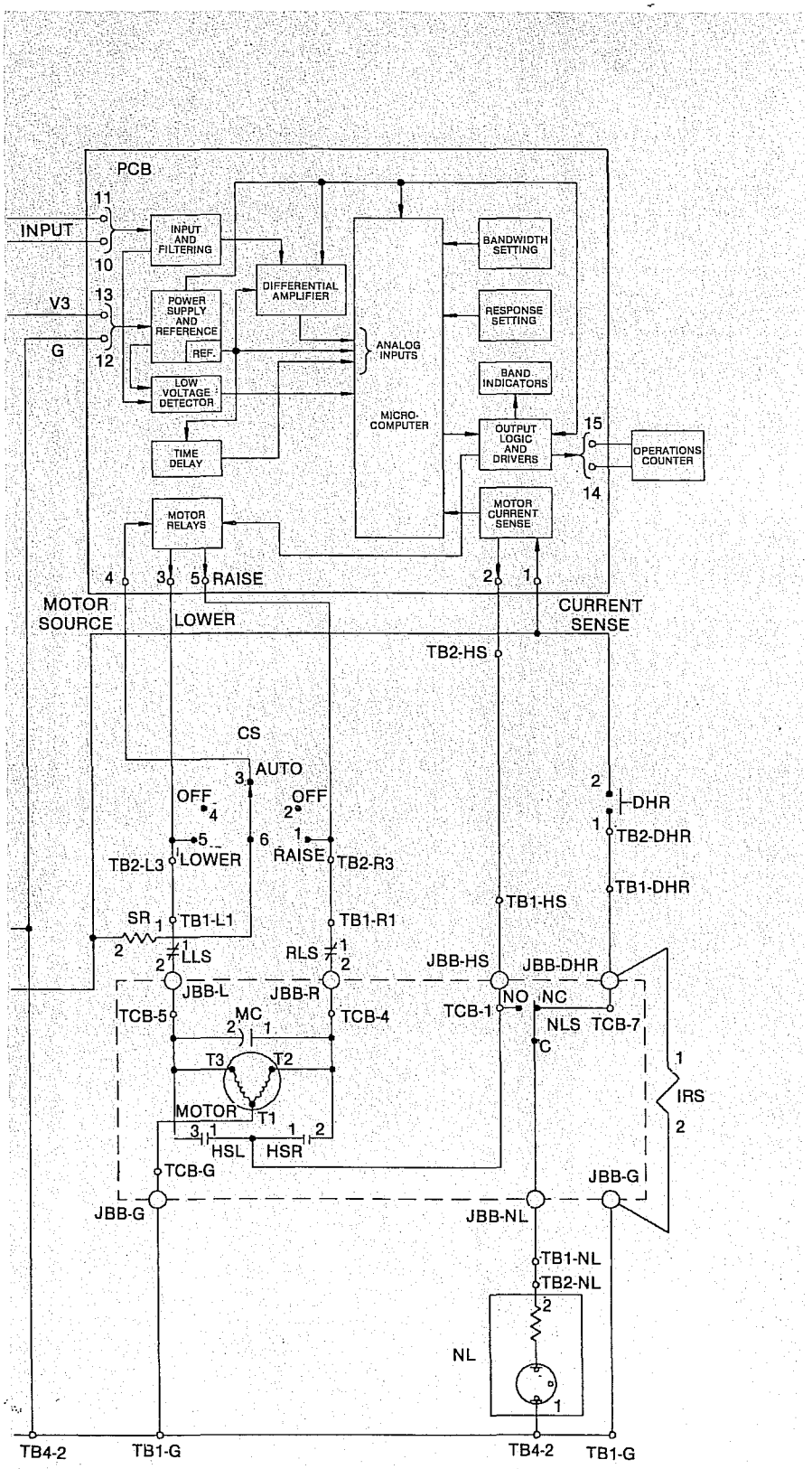

A C T	- AUXILIARY CURRENT TRANSFORMER
C S	- CONTROL SWITCH
D H R	- DRAG HAND RESET
E S T	- EXTERNAL SOURCE TERMINALS
H S L	- HOLDING SWITCH LOWER
H S R	- HOLDING SWITCH RAISE
I P T	- INPUT POTENTIAL TRANSFORMER
I R S	- INDICATOR RESET SOLENOID
J B B	- JUNCTION BOX TERMINAL BOARD ON THE COVER
L D C - C S	- LINE DROP COMPENSATION CONTROL SWITCH
L L S	- LOWER LIMIT SWITCH (POSITION INDICATOR)
L R	- LOADING RESISTOR
M C	- MOTOR CAPACITOR
M F	- MOTOR FUSE
M O V	- METAL OXIDE VARISTOR FOR SURGE PROTECTION
N L	- NEUTRAL LIGHT
N L S	- NEUTRAL LIGHT SWITCH
O C	- OPERATIONS COUNTER
P C B	- PRINTED CIRCUIT BOARD
P D	- POTENTIAL OPENING DEVICE
P F	- PANEL FUSE
P S	- POWER SWITCH
R 1	- LINE DROP COMPENSATING RESISTANCE SETTING
R 2	- TRIM RESISTOR
R C T 1	- RATIO CORRECTION TRANSFORMER
R L S	- RAISE LIMIT SWITCH (POSITION INDICATOR)
S D	- CURRENT SHORTING DEVICE
S R	- SERIES RESISTOR
T B	- CONTROL TERMINAL BOARD
T C B	- TAP CHANGER TERMINAL BOARD
T R	- TEST RHEOSTAT
V M	- MOTOR VOLTAGE
V S	- SENSING VOLTAGE
V S C 1	- COARSE VOLTAGE SETTING CONTROL
V S C 2	- FINE VOLTAGE SETTING CONTROL
V T T	- VOLTAGE TEST TERMINALS
X 1	- LINE DROP COMPENSATING REACTANCE COARSE SETTING
X 2	- LINE DROP COMPENSATING REACTANCE FINE SETTING
X 3	- LINE DROP COMPENSATION REACTOR

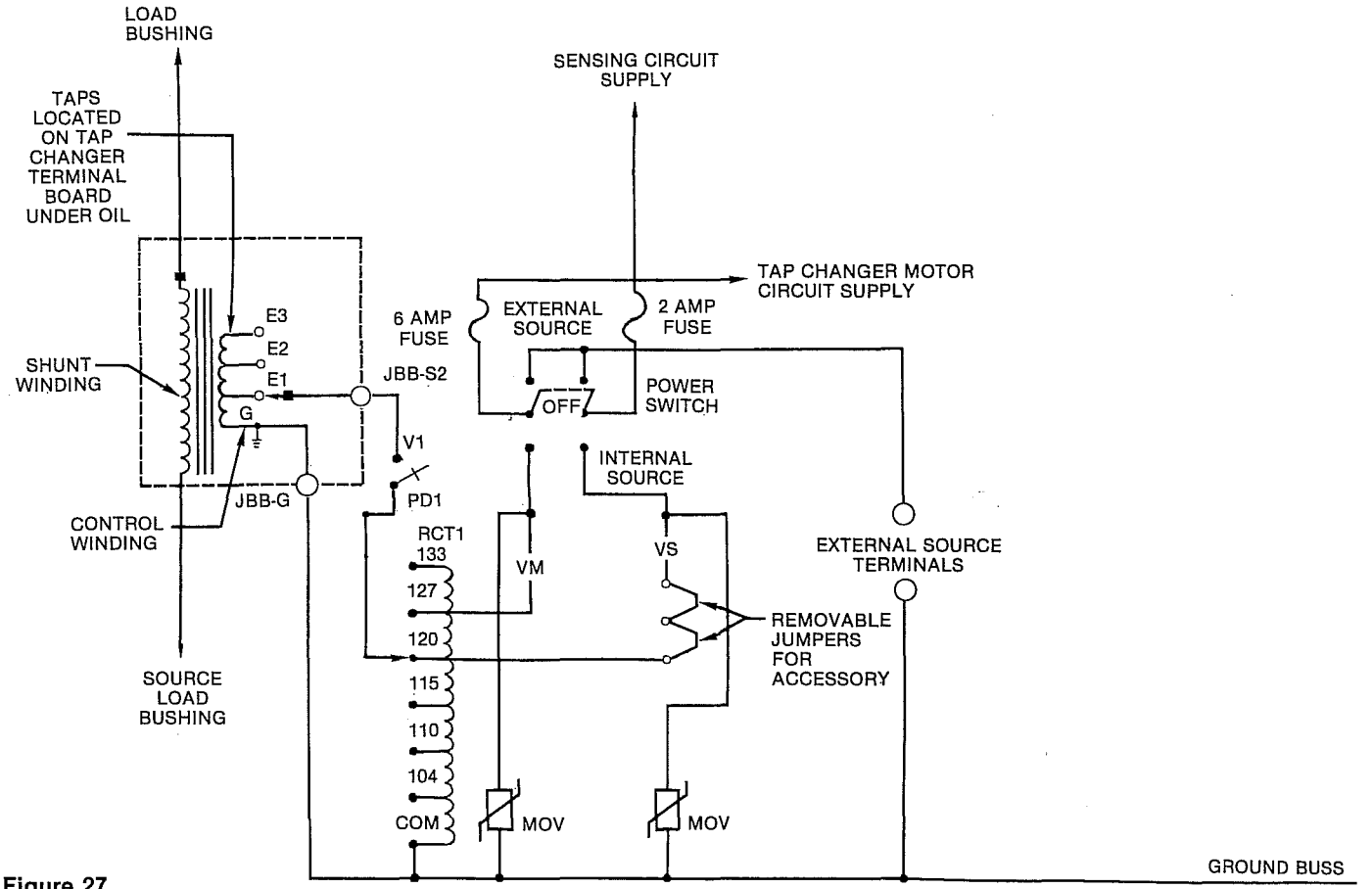

Figure 27.
Series winding - source side control power supply.

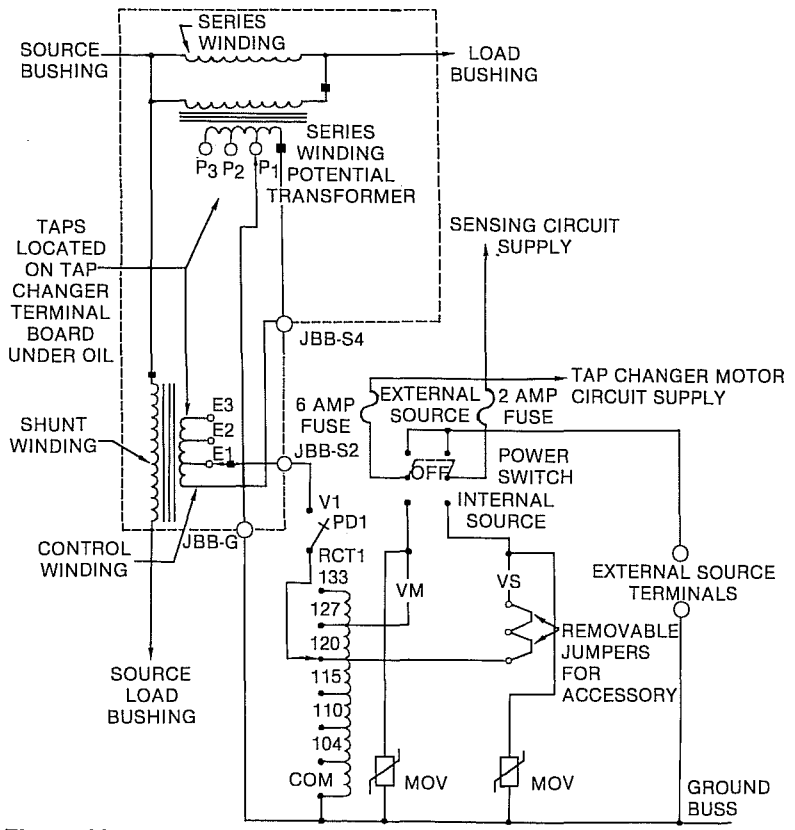

Figure 28.
Series winding - load-side control power supply.

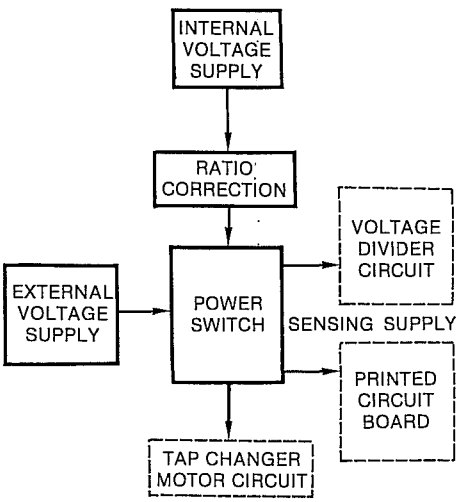

Figure 29.
Control power supply logic diagram.

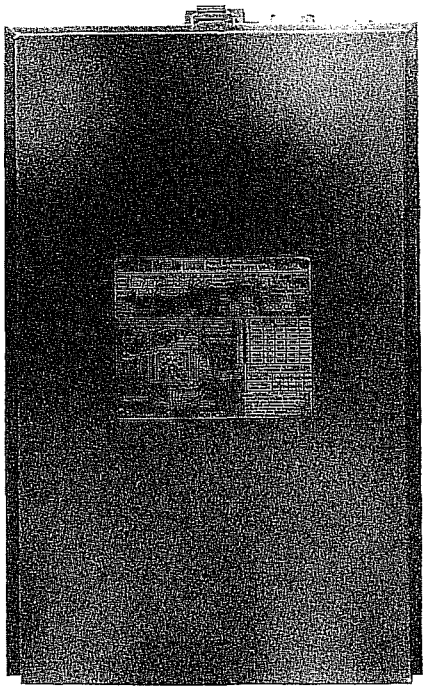

Figure 30.
Nameplate mounted.

Upon completion of the tap change, the cam opens the holding switch contact. The tap changer will repeat the cycle and continue in the same direction until:

1. The operator changes the control switch,
2. The position indicator limit switch is opened, or
3. The tap changer runs against a mechanical stop.

As the tap changer drives the position indicator drive shaft, the limit switch contact in the position indicator is opened at a predetermined setting. Thus, if the control continues to call for a tap change, there will be no power to initiate the operation of the motor. The neutral light switch, NLS, is fed through two different circuits from the motor supply. The tap changer closes the neutral light switch when the tap changer reaches the neutral position. This energizes the neutral light, NL. Note also that the drag-hand reset, DHR, will energize the neutral light at every position except neutral. The drag-hand reset functions as a neutral light test. The indicator drag hands will reset in any position, including neutral.

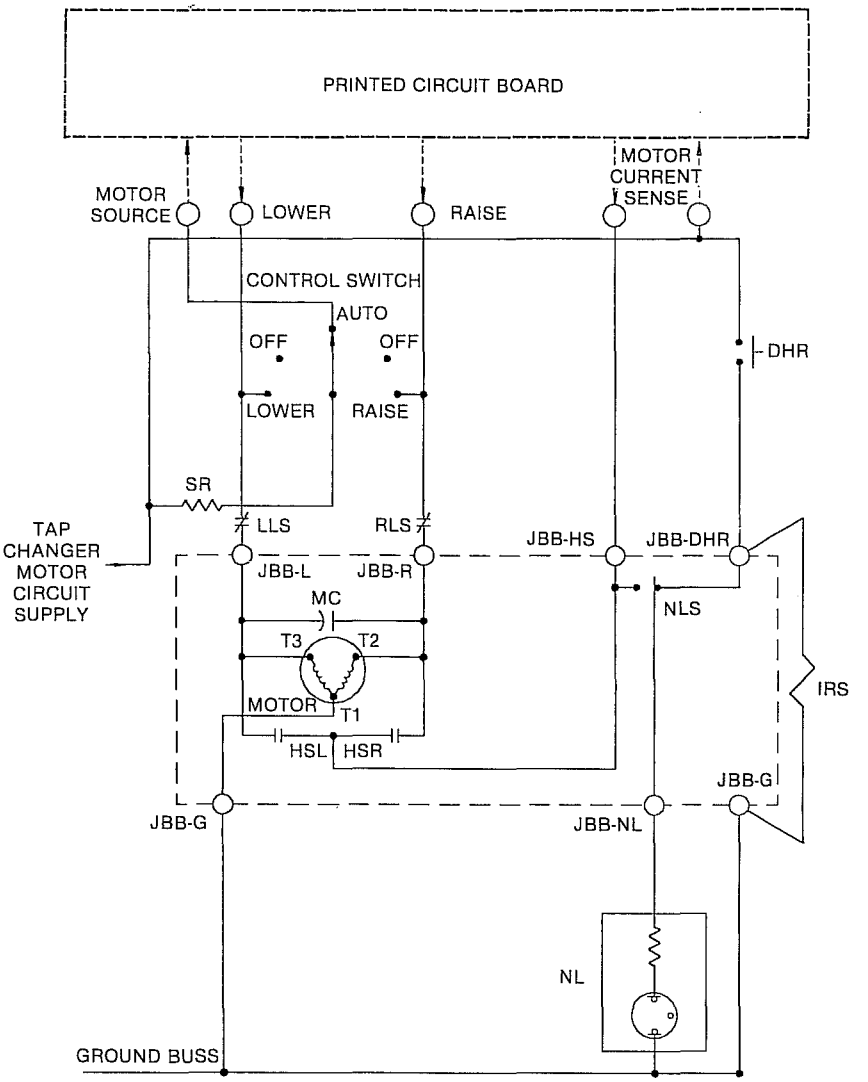

Figure 31.
Tap changer motor circuit.

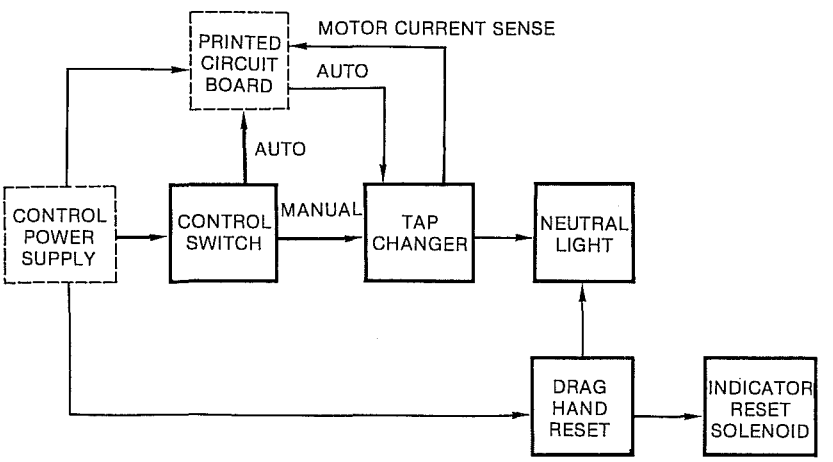

Figure 32.
Tap changer motor circuit logic diagram.

Automatic Operation

The sequence of automatic operation is similar to the manual operation. With the control switch in the auto position, a raise or a lower signal from the printed circuit will produce the same cycle of tap changer operations.

INTERNAL CONSTRUCTION OF REGULATOR

The main core-and-coil assemblies are of the shell-form configuration. The series winding on the input (source) side of the regulator (Figure 33 and 34) allows all windings (control, shunt, and series) to be located in one coil. The load voltage is read directly by the control winding.

Regulators that have the series winding on the output (load) side (Figures 35 and 36) possess an identical coil configuration, but have, in addition, a series-winding potential transformer. The potential transformer senses the voltage correction-buck or boost-due to the series winding. This voltage buck or boost is added to the source-side control winding voltage, resulting in a load voltage which is then applied to the sensing circuit of the control.

The control winding is wound on the core to obtain a supply voltage for the tap changer motor and the control sensing circuits. Taps are available on this winding for large-step voltage-ratio correction.

The shunt winding is wound over top of the control winding with the series winding wound over top of the shunt winding. Most regulators, depending upon the rating, have an equalizer winding. If applicable, the equalizer winding is wound on the outside of the coil over the series winding.

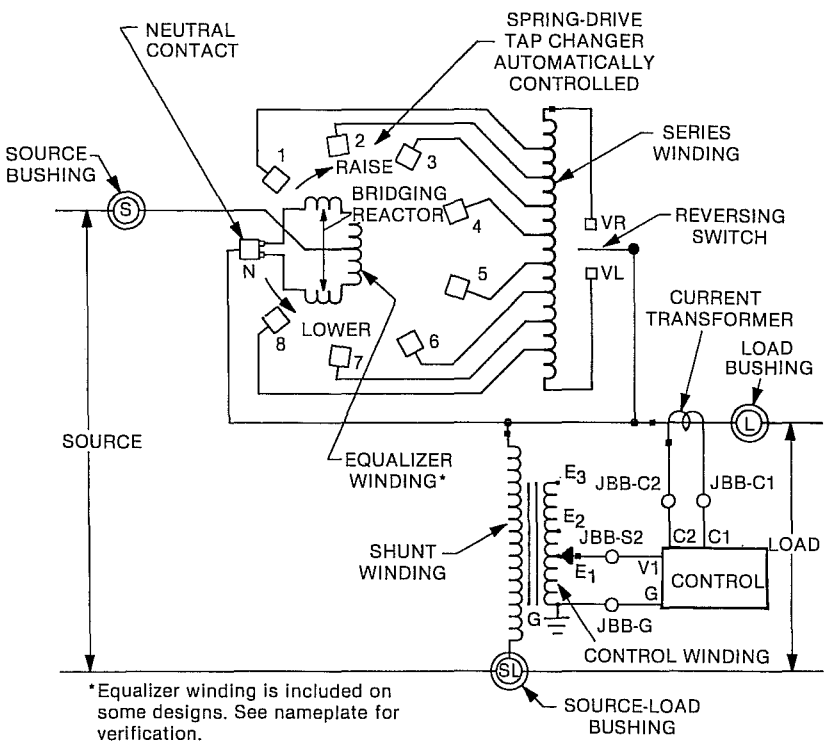

Figure 33.
Power circuit - series winding located on the source-side.

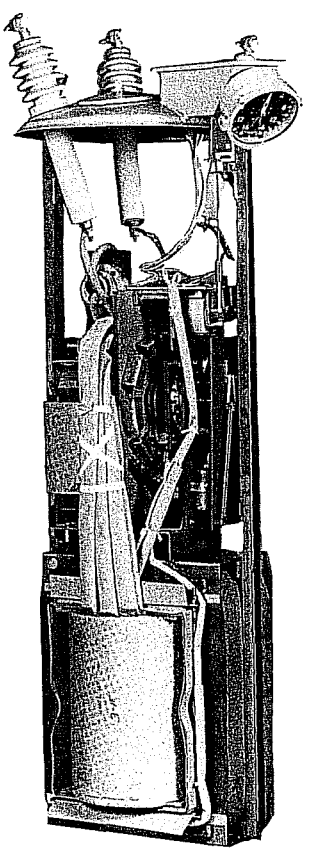

Figure 34.
Series winding located on the source-side design.

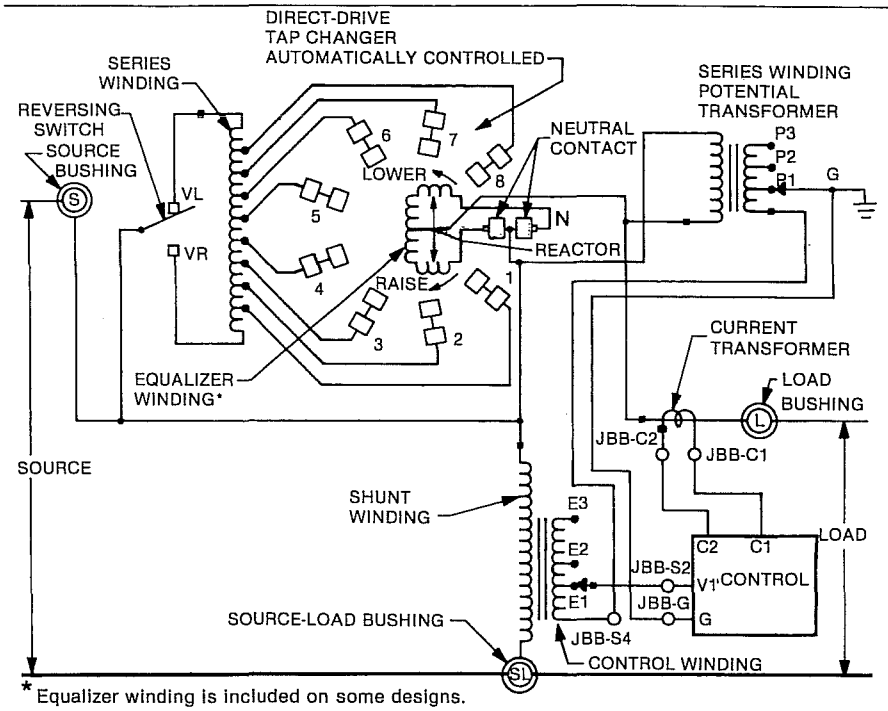

* Equalizer winding is included on some designs. See nameplate for verification.

Figure 35.
Power circuit-series winding located on the load-side.

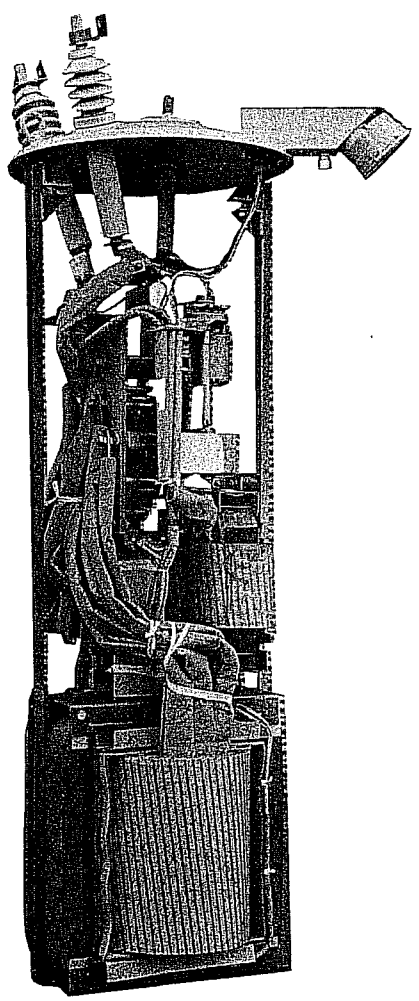

Figure 36.
Series winding located on the load-side design.

Figure 37 shows a regulator power circuit with a series transformer. This design is utilized when load current rating exceeds the tap changer rating. Figure 38 shows the internal construction of this regulator. In this type of design, the series transformer winding losses are a function of the load alone and are independent of the tap position. Because of this, limiting the range of voltage regulation does not reduce losses and, therefore, the ADD-AMP feature is not applicable.

The preventive-auto or bridging reactor is a core-form design, consisting of a coil on each leg of the core. The inside half of one coil is connected to the outside half of the other coil and vice versa, providing equal current in each half of the reactor winding. This interlacing of the two coils reduces the interwinding leakage reactance to a very low value. The reactor is completely isolated from ground by stand-off insulators. The reactor coil is at line voltage above ground. The reactor core, core clamps, and other associated parts approach this level.

The current transformer is a toroid, through which the load current passes. It furnishes a current proportional to load current to the line-drop compensator circuit in the control and to optional metering packages.

The tap changer enables the regulator to provide regulation in smooth, accurately proportioned steps at a controlled speed that minimizes arcing and extends contact life. Four different tap changers are used throughout the line of regulator ratings. Figures 39 through 42 illustrate typical internal wiring schemes of the various types of regulator constructions. Most of the wiring is on the tap changer itself. Application, troubleshooting, and operation of the spring- and direct-drive tap changers and related components are covered extensively in *Service Manual S225-10-2.*

The terminal board inside the junction box on the cover connects the internal tank wiring to the position indicator and control. The junction box wiring is shown in Figure 70.

Text continues on page 31.

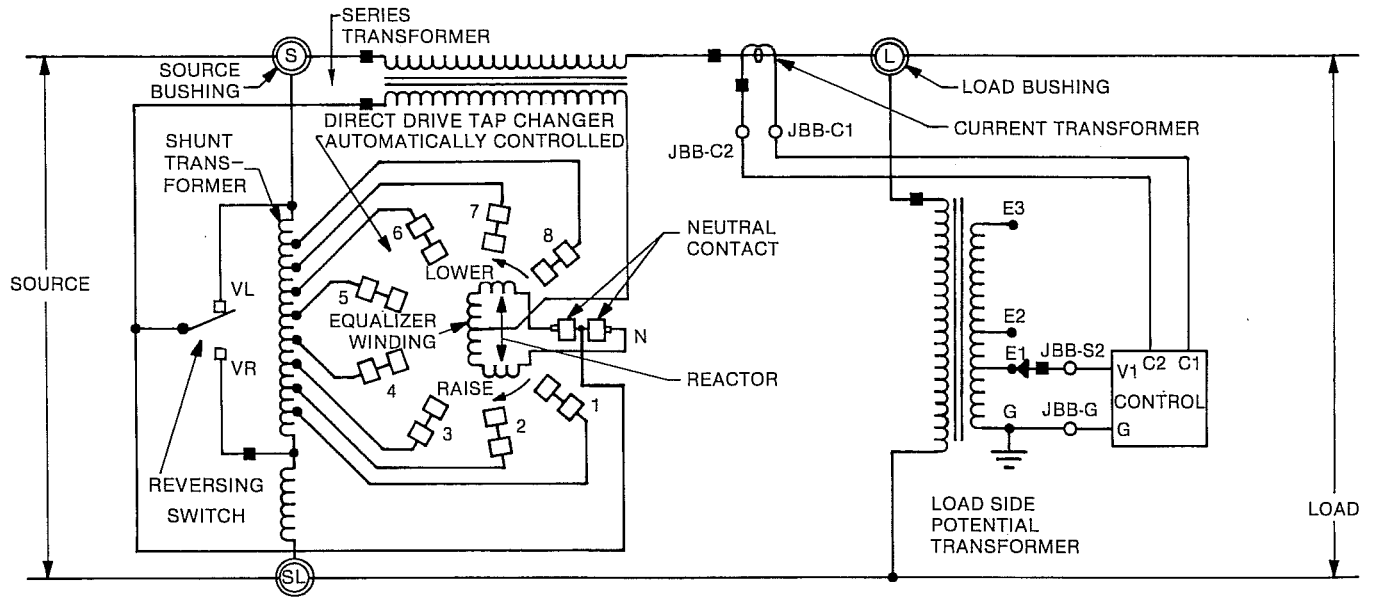

Figure 37.
Power circuit-series transformer.

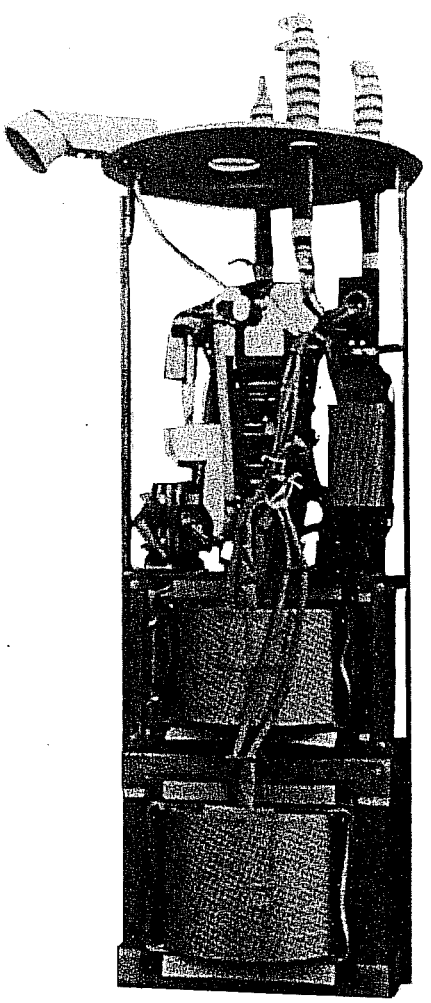

Figure 38.
Series transformer design.

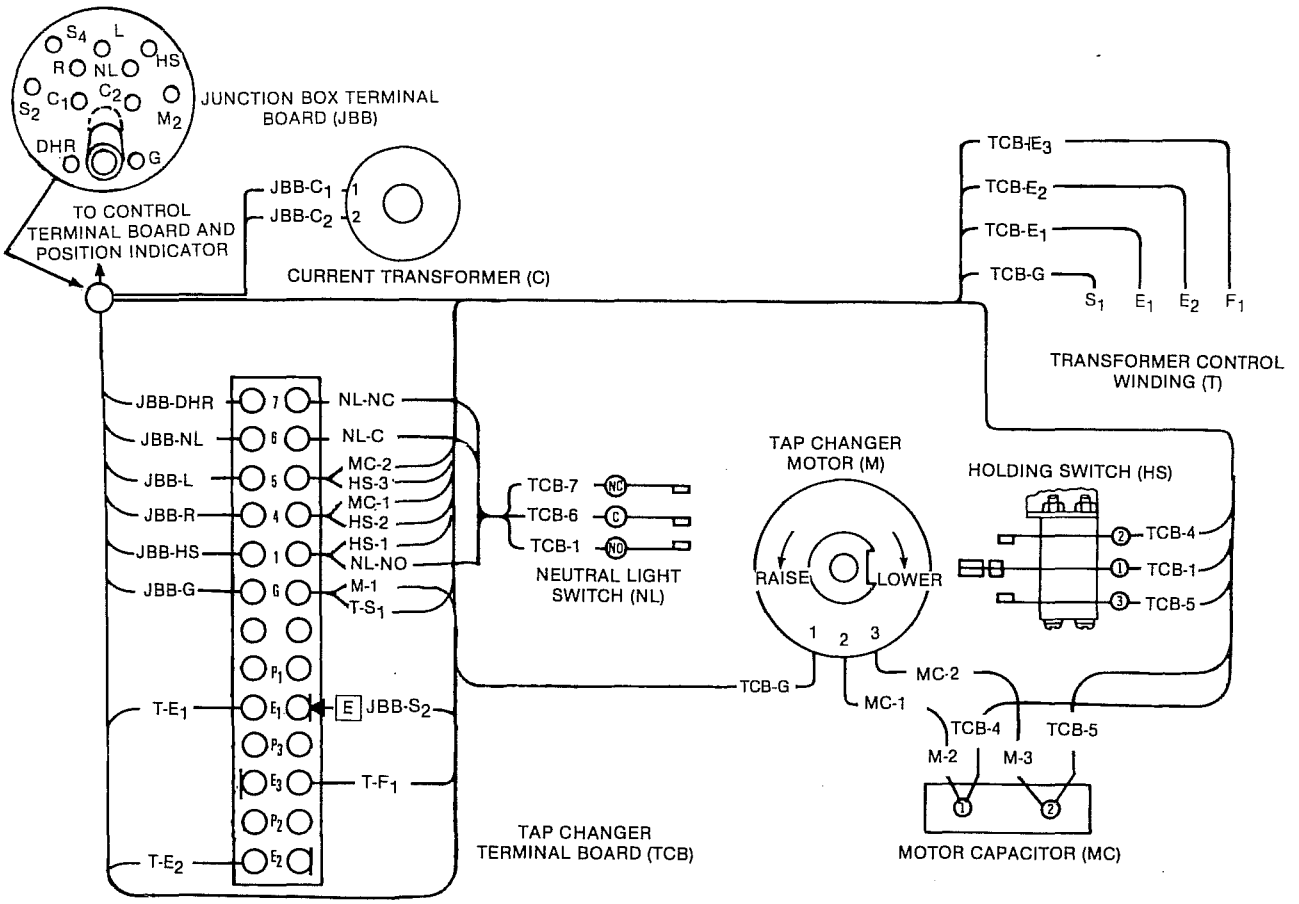

HS-1 — BLACK
HS-2 — BLUE
HS-3 — RED
JBB-C1 — WHITE
JBB-C2 — BLACK
JBB-DHR — ORG/BLK
JBB-G — WHITE
JBB-HS — ORANGE
JBB-L — GRN/BLK
JBB-NL — RED/BLK
JBB-R — BLUE
JBB-S_2 — WHITE

M-1 — WHITE
M-2 — BLUE
M-3 — RED
MC-1 — BLUE
MC-2 — RED
NL-C — WHITE
NL-NC — GREEN
NL-NO — ORANGE
T-E_1 — WHITE
T-E_2 — WHITE
T-F_1 — WHITE
T-S_1 — WHITE

TCB-1(HS) — BLACK
TCB-1(NL) — ORANGE
TCB-4 — BLUE
TCB-5 — RED
TCB-6 — WHITE
TCB-7 — GREEN
TCB-E_1 — WHITE
TCB-E_2 — WHITE
TCB-E_3 — WHITE
TCB-G — WHITE

Figure 39.
Internal wiring of spring-drive regulator with series winding located on the source side.

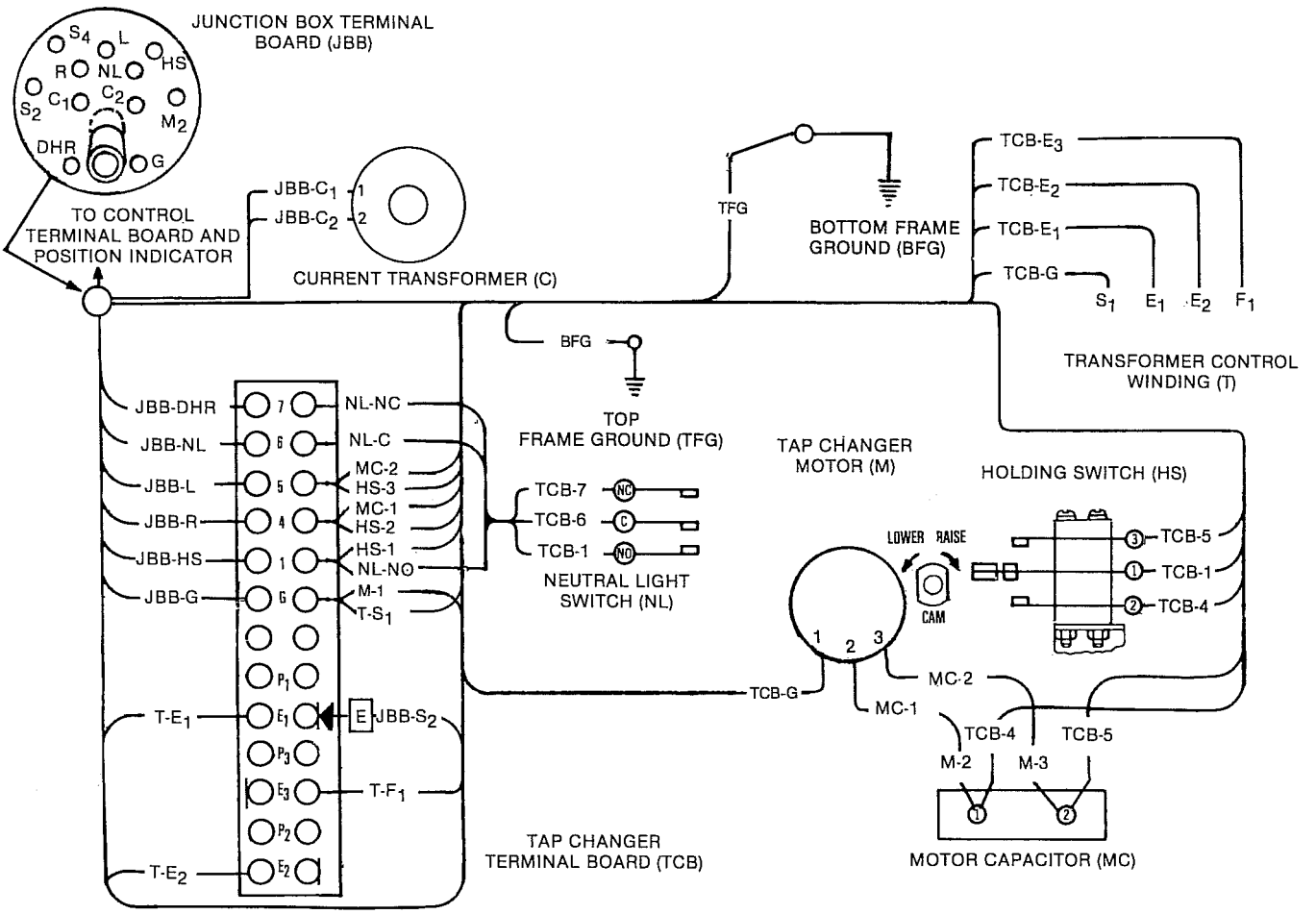

BFG — WHITE
HS-1 — BLACK
HS-2 — BLUE
HS-3 — RED
JBB-C1 — WHITE
JBB-C2 — BLACK
JBB-DHR — ORG/BLK
JBB-G — WHITE
JBB-HS — ORANGE
JBB-L — GRN/BLK
JBB-NL — RED/BLK
JBB-R — BLUE

JBB-S_2 — WHITE
M-1 — WHITE
M-2 — BLUE
M-3 — RED
MC-1 — BLUE
MC-2 — RED
NL-C — WHITE
NL-NC — GREEN
NL-NO — ORANGE
T-E_1 — WHITE
T-E_2 — WHITE
T-F_1 — WHITE

T-S_1 — WHITE
TCB-1(HS) — BLACK
TCB-1(NL) — ORANGE
TCB-4 — BLUE
TCB-5 — RED
TCB-6 — WHITE
TCB-7 — GREEN
TCB-E_1 — WHITE
TCB-E_2 — WHITE
TCB-E_3 — WHITE
TCB-G — WHITE
TFG — WHITE

Figure 40.
Internal wiring of direct-drive regulator with series winding located on the source side.

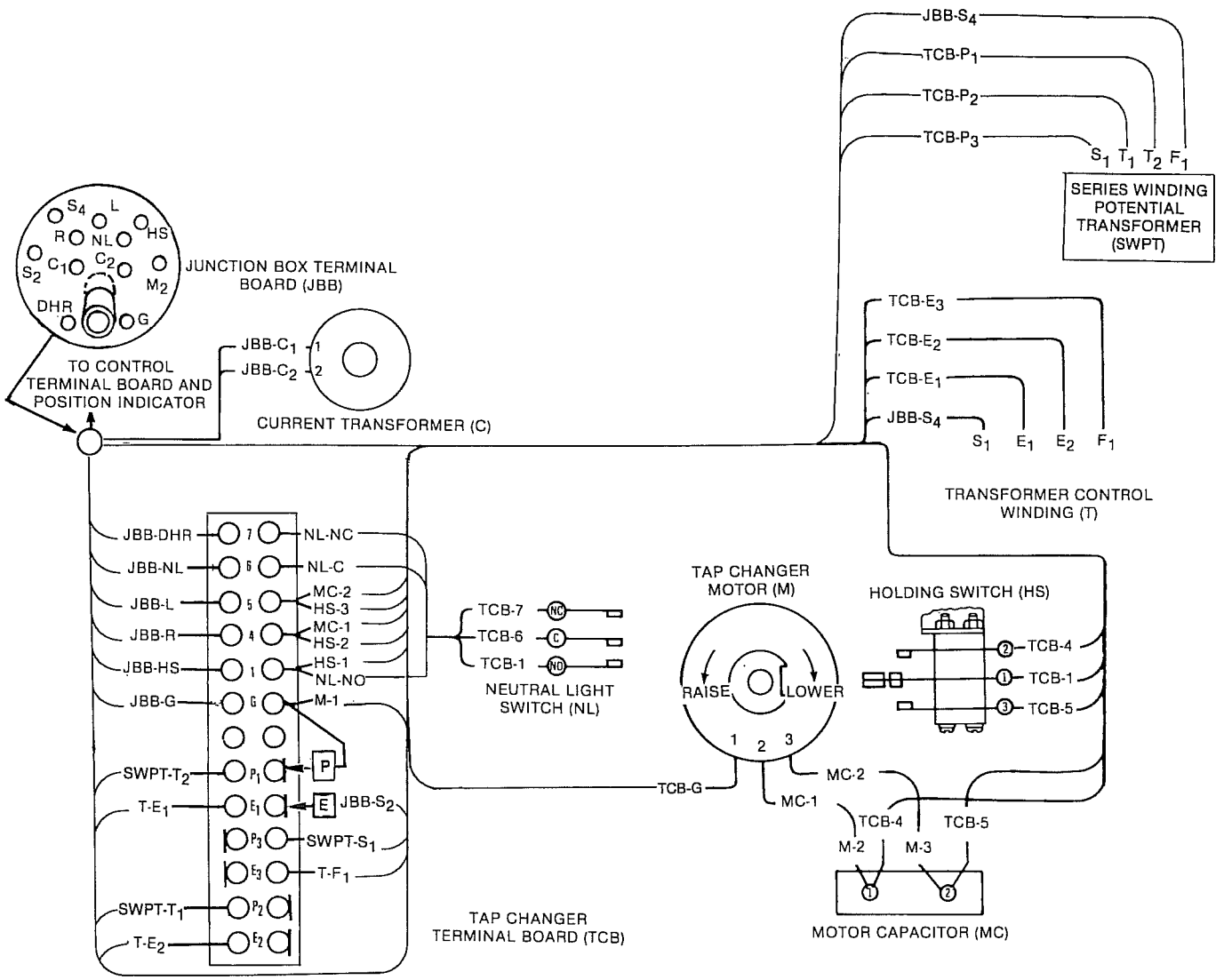

HS-1 — BLACK
HS-2 — BLUE
HS-3 — RED
JBB-C1 — WHITE
JBB-C2 — BLACK
JBB-DHR — ORG/BLK
JBB-G — WHITE
JBB-HS — ORANGE
JBB-L — GRN/BLK
JBB-NL — RED/BLK
JBB-R — BLUE
JBB-S_2 — WHITE
JBB-S_4 — WHITE

M-1 — WHITE
M-2 — BLUE
M-3 — RED
MC-1 — BLUE
MC-2 — RED
NL-C — WHITE
NL-NC — GREEN
NL-NO — ORANGE
SWPT-S_1 — WHITE
SWPT-T_1 — WHITE
SWPT-T_2 — WHITE
T-E_1 — WHITE
T-E_2 — WHITE
T-F_1 — WHITE

TCB-1(HS) — BLACK
TCB-1(NL) — ORANGE
TCB-4 — BLUE
TCB-5 — RED
TCB-6 — WHITE
TCB-7 — GREEN
TCB-E_1 — WHITE
TCB-E_2 — WHITE
TCB-E_3 — WHITE
TCB-G — WHITE
TCB-P_1 — WHITE
TCB-P_2 — WHITE
TCB-P_3 — WHITE

Figure 41.
Internal wiring of spring-drive regulator with series winding located on the load side.

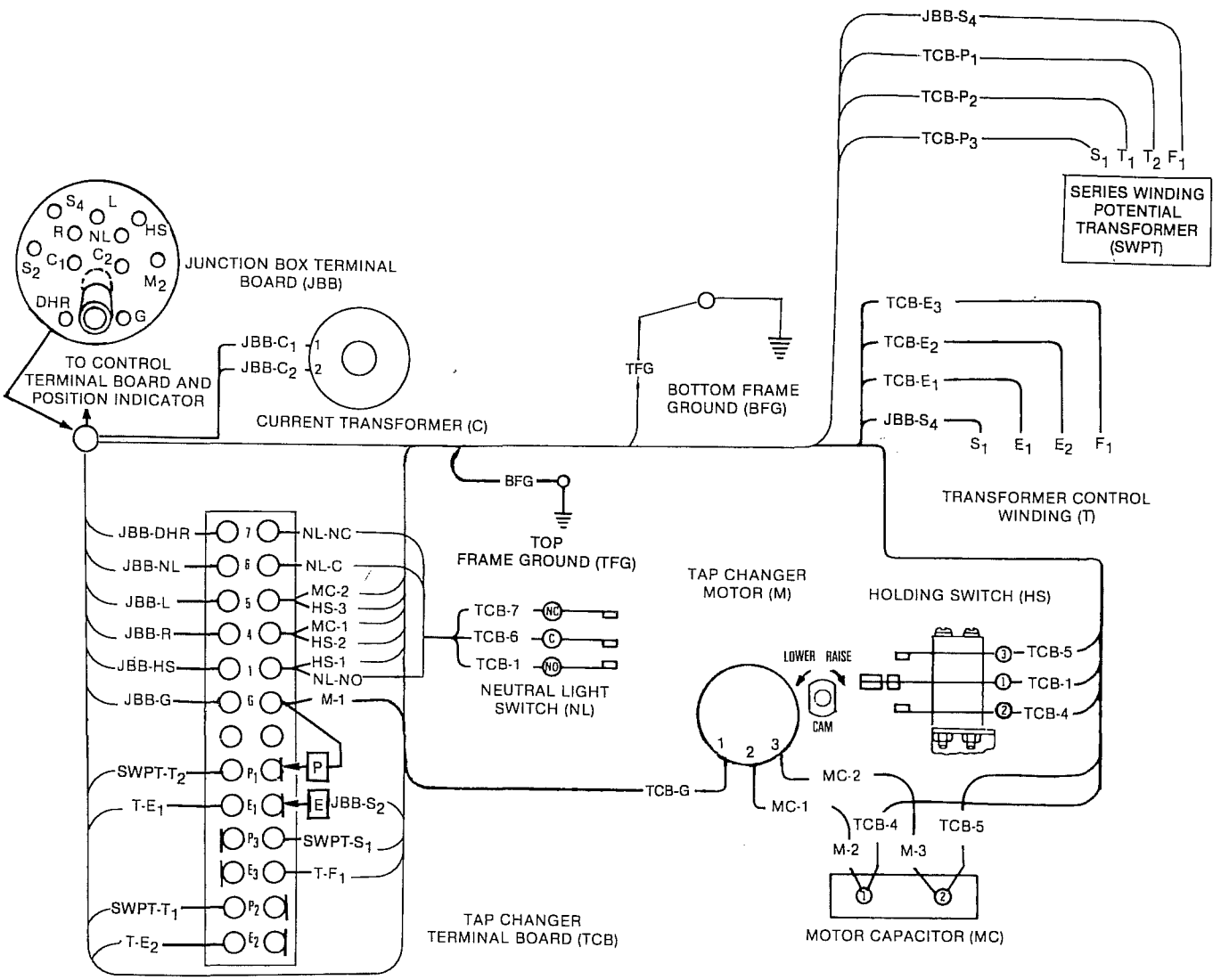

BFG — WHITE
HS-1 — BLACK
HS-2 — BLUE
HS-3 — RED
JBB-C1 — WHITE
JBB-C2 — BLACK
JBB-DHR — ORG/BLK
JBB-G — WHITE
JBB-HS — ORANGE
JBB-L — GRN/BLK
JBB-NL — RED/BLK
JBB-R — BLUE
JBB-S_2 — WHITE
JBB-S_4 — WHITE

M-1 — WHITE
M-2 — BLUE
M-3 — RED
MC-1 — BLUE
MC-2 — RED
NL-C — WHITE
NL-NC — GREEN
NL-NO — ORANGE
SWPT-S_1 — WHITE
SWPT-T_1 — WHITE
SWPT-T_2 — WHITE
T-E_1 — WHITE
T-E_2 — WHITE
T-F_1 — WHITE

TCB-1(HS) — BLACK
TCB-1(NL) — ORANGE
TCB-4 — BLUE
TCB-5 — RED
TCB-6 — WHITE
TCB-7 — GREEN
TCB-E_1 — WHITE
TCB-E_2 — WHITE
TCB-E_3 — WHITE
TCB-G — WHITE
TCB-P_1 — WHITE
TCB-P_2 — WHITE
TCB-P_3 — WHITE
TFG — WHITE

Figure 42.
Internal wiring of direct-drive regulator with series winding located on the load side.

Rear Panel Signal Circuit

The control cable makes a direct connection between the junction and control boxes. It is connected inside the control box to a terminal board (TB1) and a set of knife switches PD_1 and SD_1 on the control box rear panel shown in Figure 43. The terminal board (TB1) is arranged with jumpers and terminal designations to handle all "drop-in" accessories. The knife switches (Figure 10) provide a visible means of disconnecting the control voltage (V1) and shorting the internal current transformer supply (C). The current transformer secondary is shorted by closing the "C" knife switch on the rear panel. The internal voltage supply to the control is removed by pulling the "V1" knife switch open. These visible switches allow the operator to work safely in the area of the rear panel signal and control circuitry with the regulator energized internally through the bushings.

The potential-ratio-correction transformer (RCT1) provides fine voltage adjustment for the sensing and motor voltage supplies. RCT1 is shown in Figure 8 with instructions showing the lead that is moved for ratio correction. This input lead (PD_1-2) can be identified by its flanged spade terminal that makes removal easy for ratio correction adjustments.

The leads from the control are fitted with a fanning strip (Figure 8) which connects to the terminal board (TB2) at the bottom of the rear panel. This strip organizes the leads for easy removal or reinstallation. The terminals need only be loosened for the removal of the fanning strip.

CONTROL FUNCTION

This section breaks the control operation down into specific circuits for ease of understanding. Logic diagrams and schematics are included for most circuits to aid in understanding the text.

This section can also be used to further understand the troubleshooting instructions provided later on. The schematics are of particular help in this regard.

Voltage Divider Circuit

The voltage divider circuit, including the internal current transformer, shorting device (SD_1), auxiliary current transformer (ACT), line-drop compensation control switch (LDC-CS), test rheostat (TR), input potential transformer (IPT), and line-drop compensation reactance (X_1, X_2, X_3) and resistance (R_1, R_2) settings are illustrated in Figures 44 and 45.

From the two-amp fuse, the sensing voltage is fed to the voltage setting controls, VSC1 and VSC2, through the test rheostat, TR, and to the power supply of the printed circuit board, V_3 to G. The voltage setting controls consist of a potentiometer, VSC2, which provides the fine adjustment and a switch, VSC1, which selects coarse adjustment on the input potential transformer. The output of this transformer is in series with the line drop compensation resistance and reactance settings, giving a sensing input to the printed circuit.

NOTE: The voltmeter test terminals monitor a voltage proportional to the sensing input with test rheostat (TR) set on auto.

Current supply, from the current transformer mounted inside the regulator tank, is fed around a visible shorting switch (C) on the rear panel signal circuit to an isolation auxiliary current transformer (ACT), through the polarity switch of the line-drop compensator (LDC-CS), and then to the reactance and resistance components of line-drop compensation. By means of this circuit, the load current affects the sensing voltage input to the printed circuit. The line-drop compensation control switch has an off position to bypass the compensator circuit for test purposes and non-applicable systems.

The input potential transformer (IPT) provides a compensating effect for changes in diode characteristics on the printed circuit board. This feature enhances stability when a wide swing of ambient temperature occurs. The control provides a maximum 1/4-volt change from $-40°C$ to $+70°C$.

The use of precious-metal contacts in key components such as potentiometers and control switches provides additional stability over a wide temperature range and increases service life.

Printed Circuit Board

The printed circuit board schematic wiring (Figure 46) shows the major sections of the printed circuit board. The printed circuit board is represented as a logic diagram in Figure 47.

The heart of the circuit is a single-chip microcomputer that digitizes a group of conditioned inputs, decides the required response from internal programming, and provides the required signals to the drivers which feed the motor relays, counter and band limit indicators. The power supply and reference section provides power and a reference voltage to other sections of the printed circuit.

The input and filtering section receives and rectifies the input from the voltage divider circuit, and provides a significant level of harmonic rejection to increase the accuracy of the control. Because of the level of rejection of the third harmonic and stability in a wide range of temperatures, the control is more accurate than most voltmeters that are used to maintain it.

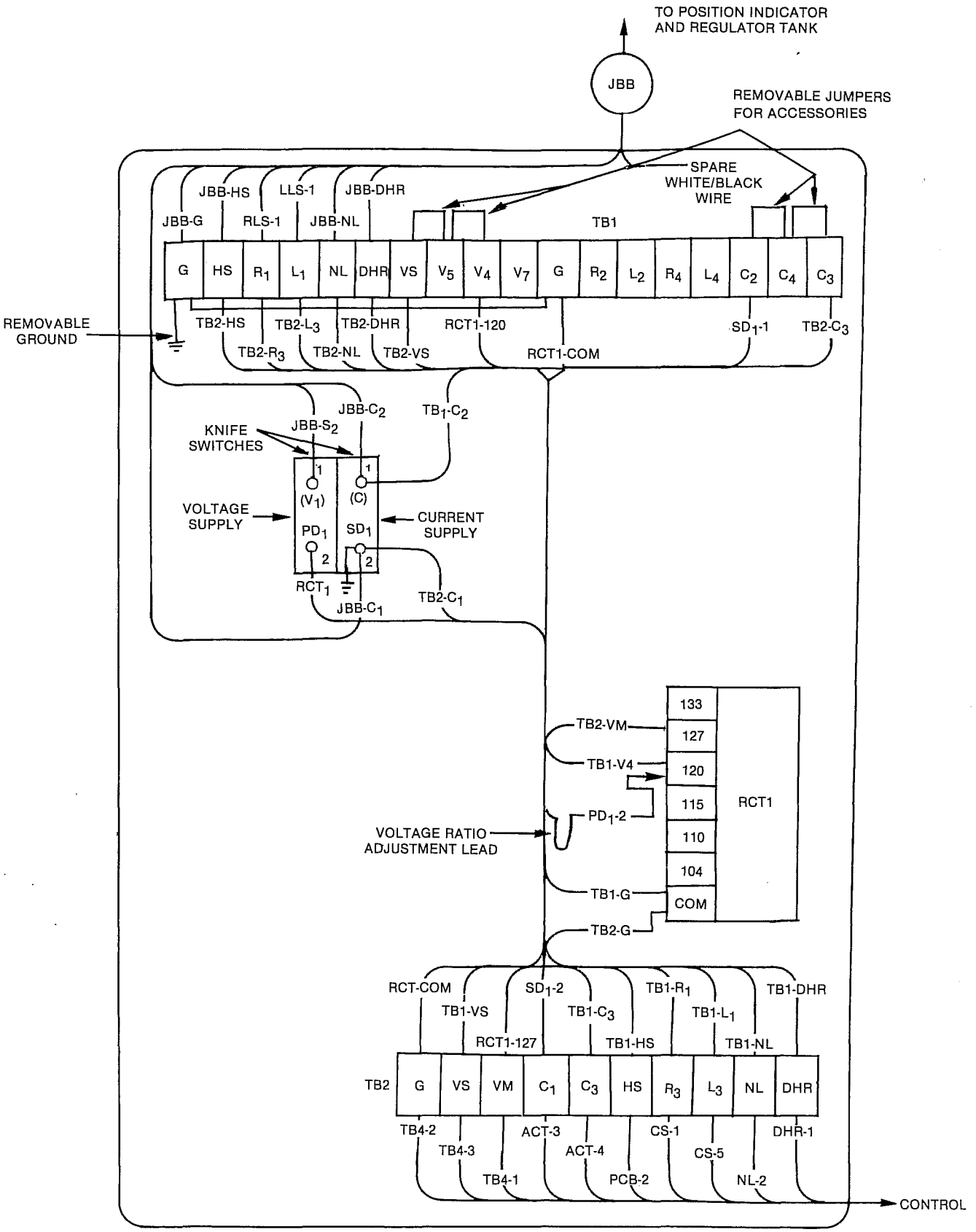

Figure 43.
Rear panel signal circuit.

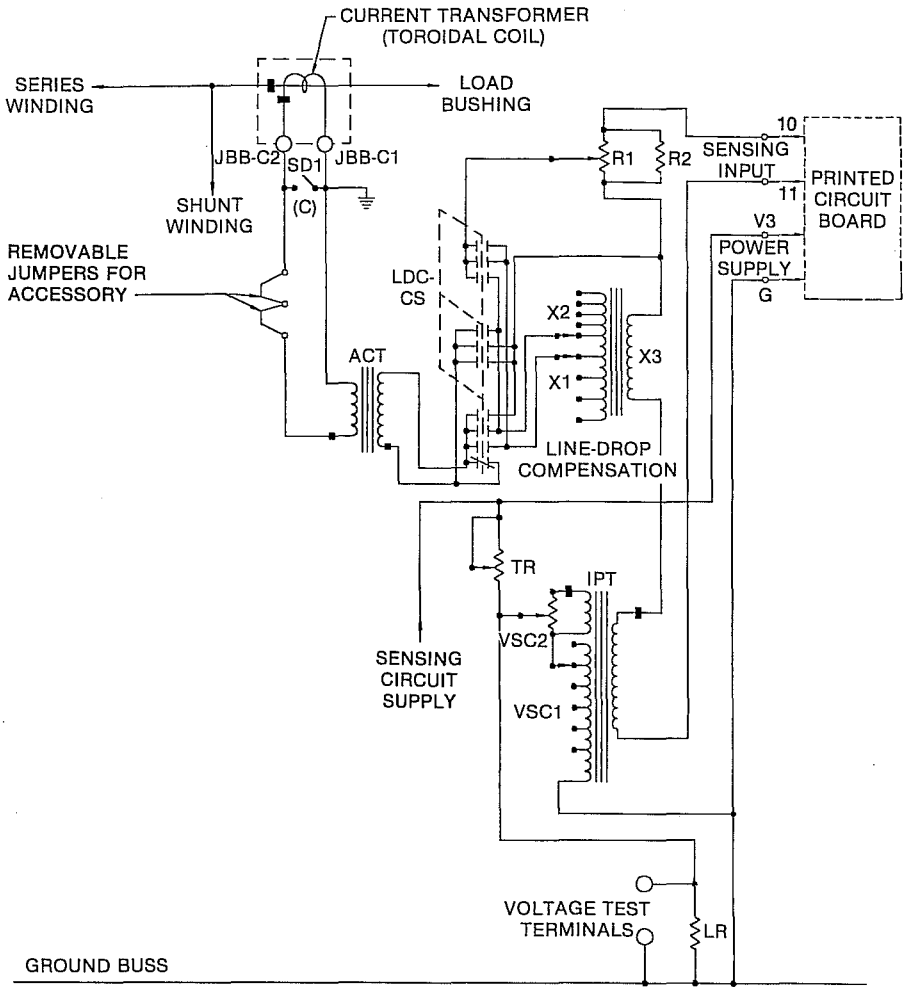

Figure 44.
Voltage divider circuit.

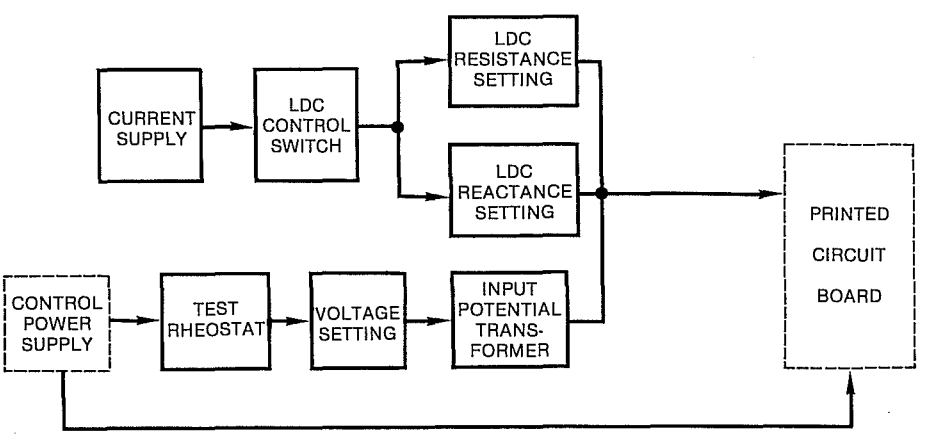

Figure 45.
Voltage divider circuit relation.

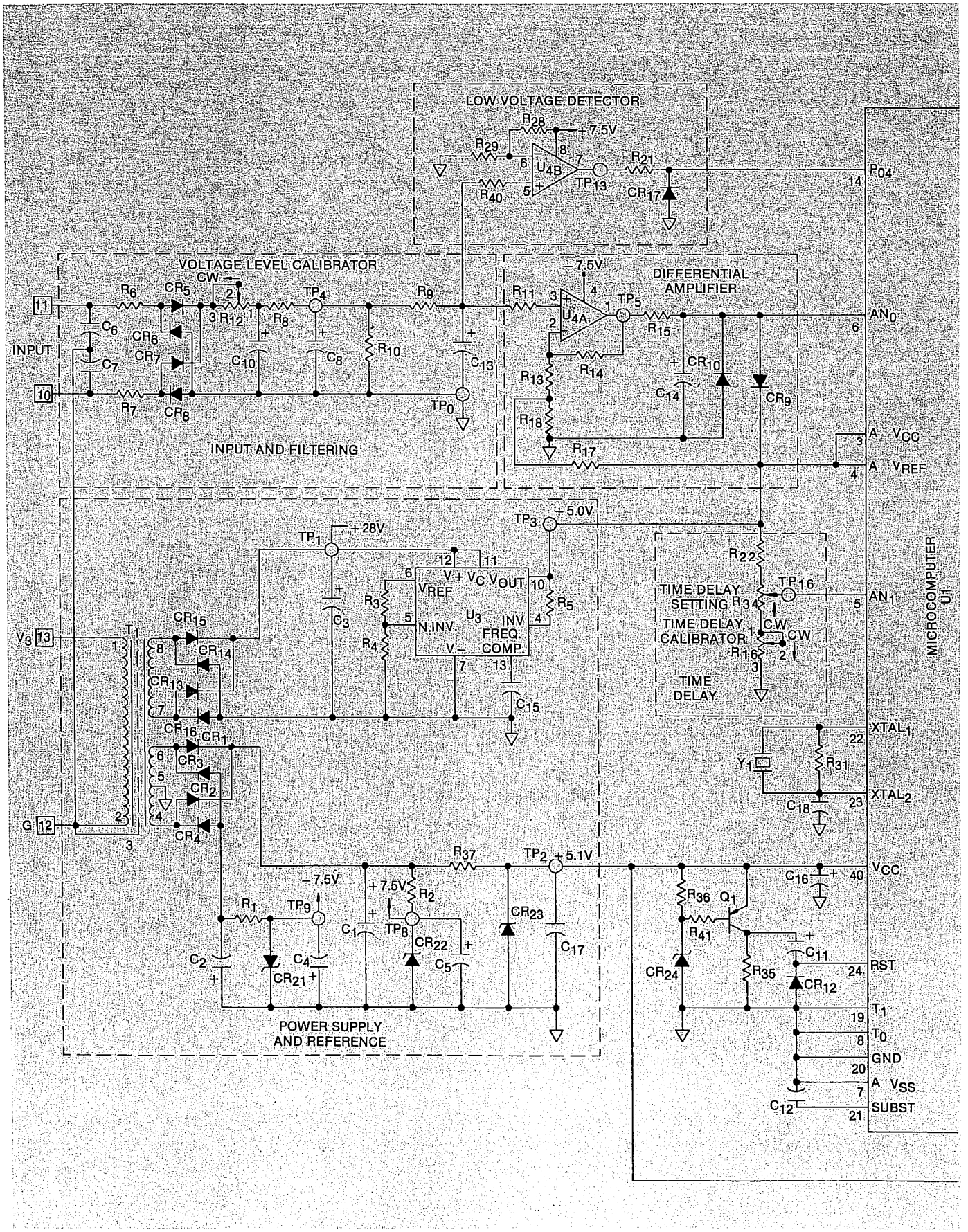

Figure 46.
Printed circuit board schematic.

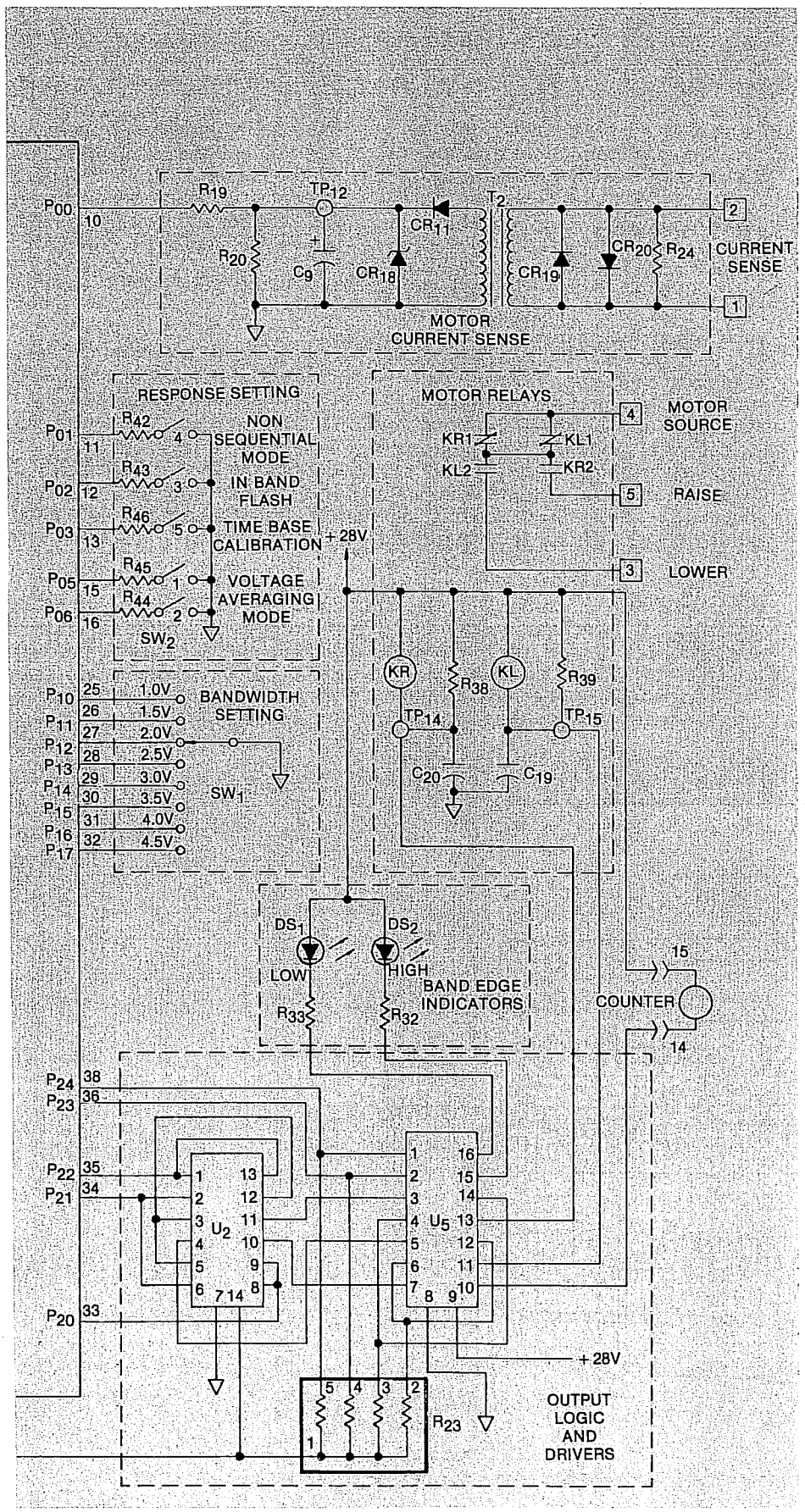

CL-2 PRINTED CIRCUIT BOARD
PARTS LIST

ITEM	DESCRIPTION
R 1, 2	120 OHM 1/2 WATT 5%
R 3	2.89 K RN55
R 4	7.15 K RN55
R 5, 32, 33	2.2 K 1/2 WATT 5%
R 6, 7	3.65 K RN60, TC-50 PPM
R 8	8.25 K RN55, TC-50 PPM
R 13	9.53 K RN55
R 10	810 OHM RN55 TC-50 PPM
R 12, 16	2K TRIMPOT, BOURNS 3009Y-1-202
R 14	140K RN55
R 9, 11, 15 19, 20, 21, 38, 39, 40	10K 1/4 WATT 5%
R 17, 18	1.0 K RN55
R 22	390 OHM 1/4 WATT 5%
R 23	6.8 K OHM × 5 SIP NETWORK
R 24	5.6 K OHM 1/2 WATT 5% OR 10%
R 28	5.6 K OHM 1/4 WATT 5%
R 29	1.6 K OHM 1/4 WATT 5%
R 31	1 MEG OHM 1/4 WATT 5%
R 34	10 K LINEAR CLAROSTAT 380 2½" SHAFT
R 35, 42, 43, 44, 45, 46	1.0 K OHM 1/4 WATT 5%
R 36, 41	100 OHM 1/4 WATT 5%
R 37	30 OHM 3 WATT 10%
CR 1-8, 11, 13-16	IN4004
CR9, 10, 12, 17	IN914
CR19, 20	MR500
CR18	IN4733 5.1V, 1W
CR21, 22	IN4737 7.5V, 1W
CR23	IN5338B 5.1V, 5W, 5%
CR24	IN4730 3.9V, 1W
C 1	1000 MFD 25V RADIAL LEAD
C 2, 3	220 MFD 50V, 50ULA220B-T
C 4, 5, 8, 9, 13, 14, 16	10MFD 16V AL ELECT., RADIAL LEAD, LOW LEAKAGE
C 15	0.001 16V CERAMIC
C 6, 7, 19, 20	0.1 400 V, ZR8117-104
C 11	3.3 MFD, 15V 10% TANTALUM
C 12	1 MFD 16V CERAMIC
C 10	1.5 MFD, 50V, 10% TANTALUM
C 17	0.01 MFD 16V CERAMIC
C 18	20 PF (OR 22PF) 16V CERAMIC
U 1	D8022C(M)801
U 2	MC14011BCP
U 3	SC76581LH/MC1723L
U 4	SC76547LH/MC1558U
U 5	MC1413P
Q 1	2N2907A
Y 1	CRYSTAL 2.45 MHZ
T 1	TAA142701
T 2	TAA142702
KR, KL	AIRPAX 37C21D24-0020 RELAYS
SW1	TAA14226900A
SW2	GRAYHILL 78R BO65 (OR EQUIVALENT)
DS1, 2	CHICAGO MINATURE CM4-482B
TERMINAL STRIP	R8B6VM131201 OR RDI PCV13-005

The sensing voltage is fed into the differential amplifier and low-voltage detector sections from the input and filtering section. In the event of a component failure in the voltage divider circuit or the input and filtering section, the low-voltage detector will prevent the regulator from running to the 16-raise position by sending a signal to the microcomputer to deactivate the tap changer motor circuit.

The input and filtering sensing output is compared with a portion of the reference voltage input at the differential amplifier. The amplified difference is fed to an analog input of the microcomputer which is digitized, and used in comparison with the bandwidth setting. The time-delay section feeds a portion of the reference voltage to another analog input of the microcomputer where it is digitized and used as the set point for a digital timer.

The presence of a signal from the microcomputer on the output logic and drivers section will light one of the band indicators and initiate a motor relay operation which will initiate a tap changer operation, after the time-delay circuitry times out.

Once the motor turns, it closes a holding switch on the tap changer. The holding switch circuit supply is then fed through the motor current sense section which develops an input signal to the microcomputer. This input signal operates the counter and inhibits the operation of the output logic and drivers section, opening the motor relays. At this point, the tap changer is energized independently and does not need power from the motor relays.

When the motor completes the switching cycle and opens the holding switch, a continued signal presence from the microcomputer to the drivers will cause another tap change after a slight pause. The time delay will reset only when the microcomputer output signal disappears from the output logic and drivers section.

The CL-2 control has increased flexibility and unique operational features supplied by the microcomputer and response settings. Two response settings are used to accurately calibrate the bandwidth, voltage setting and time delay with the aid of the band limit indicators and calibrating resistors. The remaining response settings offer the regulator two additional modes of tap changer switching operations. A standard CL-2 control incorporates sequential switching, but this can be easily changed in the field to either nonsequential or voltage-averaging modes.

The standard sequential mode is operational when all response settings are OFF. The nonsequential and voltage-averaging modes are activated once the corresponding response setting grounds the selected input of the microcomputer. Further discussion of the mode application and service procedures required to change the modes is given on pages 12 and 13, Switching Modes.

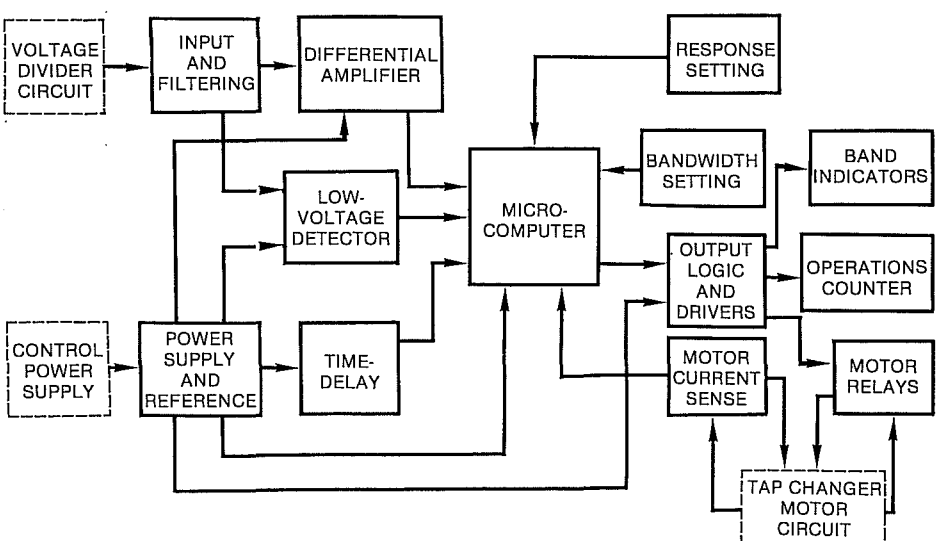

Figure 47.
Printed circuit board logic diagram.

Power Supply and Reference Voltage

The power supply and reference section (Figures 48 and 49) is fed by the control power section (see page 19) through the primary of transformer (T1) and then back to ground. One secondary of T1 feeds a full-wave rectifier consisting of CR_{13}, CR_{14}, CR_{15}, CR_{16}, and capacitor C_3, providing the dc supply of +28 volts, TP_1, which feeds motor relays KR and KL, band edge indicators, drivers, and the counter. From TP_1 a voltage regulator U_3 is used to obtain a dc reference supply of +5.0 volts (TP_3) which is fed into the time delay, differential amplifier and microcomputer sections of the printed circuit.

The other secondary of transformer T1 feeds the full-wave rectifier CR_1, CR_2, CR_3, CR_4, and capacitors C_1 and C_2. Power supplies +7.5 volts dc (TP_8) and −7.5 volts dc (TP_9) then are established from the resistors R_1 and R_2, capacitors C_4 and C_5, and Zener diodes CR_{21} and CR_{22}. They activate amplifer U_4 of the differential amplifer and low-voltage detector sections. This power supply bus is then fed through resistor R_{37} to the shunt-connected capacitor C_{17} and Zener diode CR_{23} to obtain a dc supply of +5.1 volts (TP_2). This voltage is supplied at the microcomputer and output logic and drivers section of the printed circuit board.

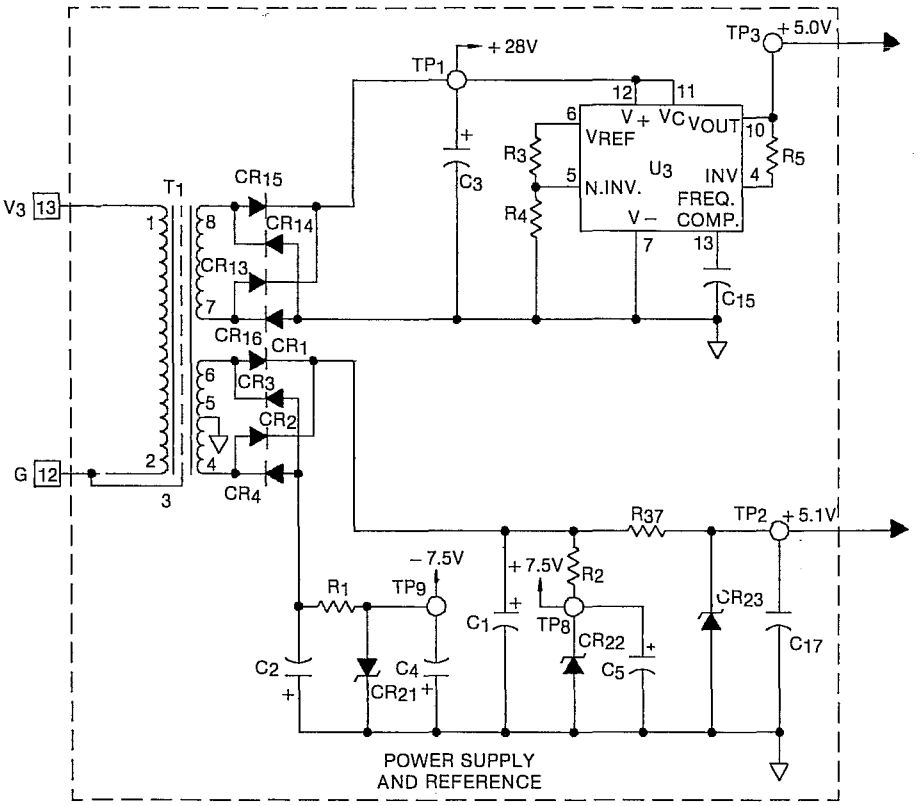

Figure 48.
Power supply and reference schematic.

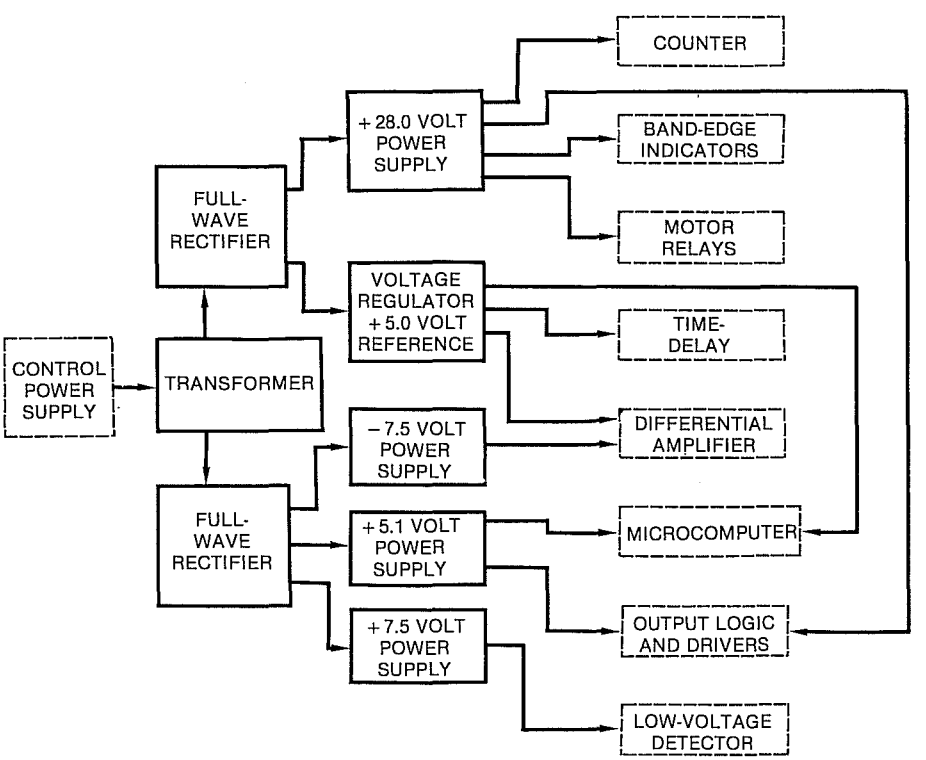

Figure 49.
Power supply and reference logic diagram.

Input and Filtering Circuit

The input and filtering portion of the printed circuit board is illustrated in Figures 50 and 51. An ac supply from the voltage divider section (see page 33) is fed into the input and filtering section on the printed circuit board. This input is received by the shunt capacitance, C_6 and C_7, for added protection against surges; and then given to the series resistors, R_6 and R_7; the full-wave rectifier composed of CR_5, CR_6, CR_7 and CR_8; and capacitor C_{10} to obtain a dc voltage. The design coordination of the input potential transformer (IPT) and the diode bridge in this circuit segment provides compensation for a maximum of 1/4-volt shift from −40°C to +70°C. The dc voltage is fed through bandwidth and voltage level calibrating resistor R_{12}. From R_{12}, it is fed through additional series and shunt resistors R_8, R_9 and R_{10} and shunt capacitors C_8 and C_{13}. These resistors and capacitors achieve a significant level of harmonic rejection and reduction of the ripple factor.

Low-Voltage Detection Circuit

The low voltage detector section of the printed circuit board is shown in (Figures 52 and 53). The filtered and rectified output from the input and filtering section is fed through resistor R_{40} to terminal 5 of comparator U_{4B}. An input to terminal 6 of U_{4B} is fed from the voltage divider circuit consisting of resistors R_{28} and R_{29} and the +7.5-volt dc power supply. During normal operation, the filtered and rectified input causes terminal 5 of comparator U_{4B} to swing positive with respect to terminal 6, turning on output terminal 7 (TP_{13}). This signal is fed through resistor R_{21} to input terminal 14 of microcomputer U_1. A loss or drop of input voltage, where the input related to 120 volts ac drops below 80 volts ac, causes terminal 5 of U_{4B} to swing negative with respect to terminal 6. The output then at terminal 7 swings negative and signals the microcomputer U_1 to shut the regulator down by inhibiting tap changer motor action. CR_{17} limits the negative swing to about −0.5 volt. The regulator is prevented from running to the 16 – raise position due to a failure of any of the control components in the sensing input circuit.

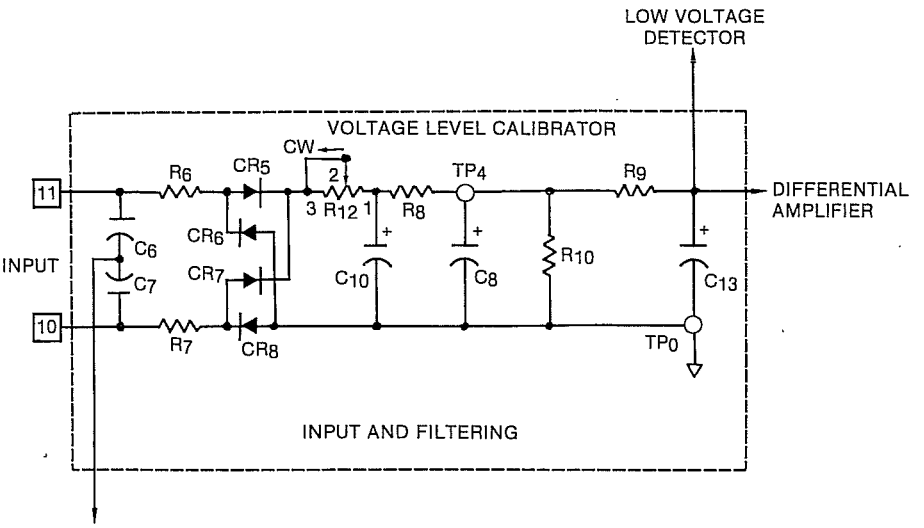

Figure 50.
Input and filtering schematic.

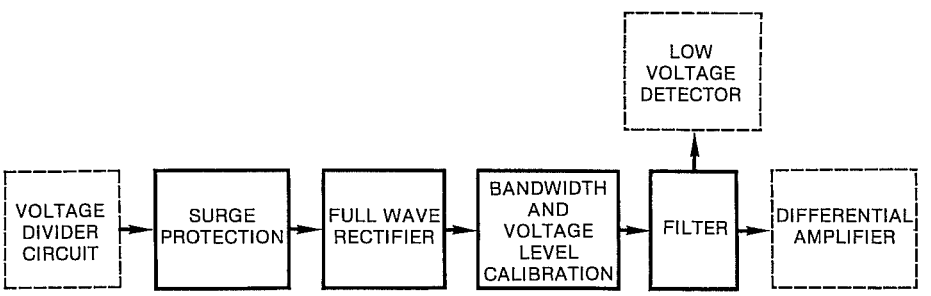

Figure 51.
Input and filtering logic diagram.

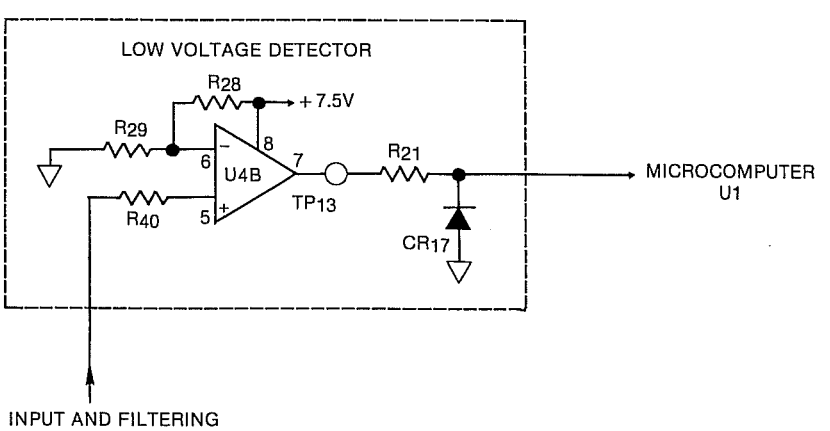

Figure 52.
Low-voltage detector schematic.

Differential Amplifier

The differential amplifier circuit is shown in Figures 54 and 55. The input and filtering circuit output is fed through resistor R_{11} to terminal 3 of the error amplifier U_{4A}. The input to terminal 2 of U_{4A}, through resistor R_{13}, is comprised of a +5.0 reference voltage and the voltage divider circuit composed of resistors R_{17} and R_{18}. Resistors R_{13}, R_{14}, R_{17}, and R_{18} establish the gain of the error amplifier U_{4A}. Depending upon the differential swing between input terminals 2 and 3, the output of U_{4A}, terminal 1 (TP5), will swing above and below approximately a +2.5 volts dc level. The range between the minimum and maximum voltages at this output, which cause the microcomputer to send a signal to the drivers, increases as the bandwidth setting increases.

Additional filtering is provided through resistor R_{15} and capacitor C_{14}. Diodes CR_9 and CR_{10} establish the minimum and maximum voltage limits of the input to terminal 6 of the microcomputer.

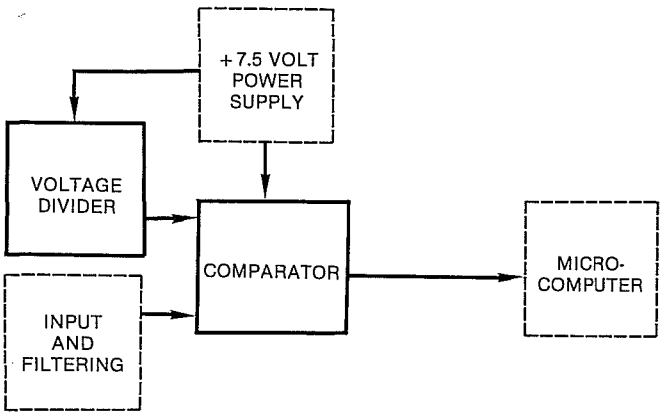

Figure 53.
Low-voltage detector logic diagram.

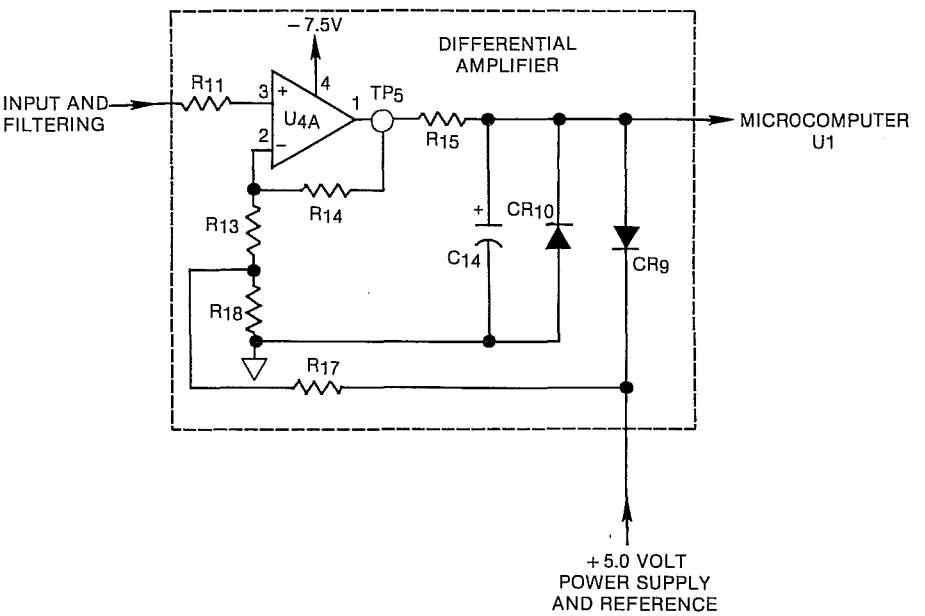

Figure 54.
Differential amplifier schematic.

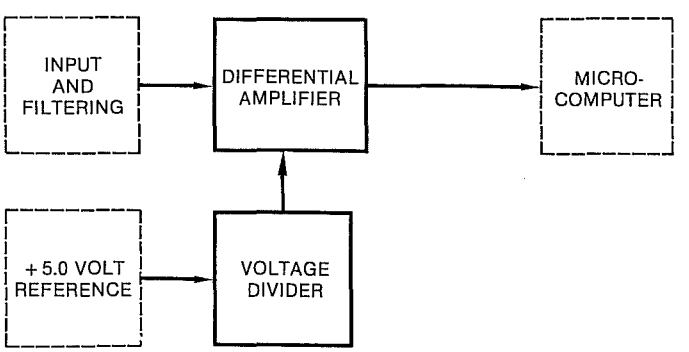

Figure 55.
Differential amplifier logic diagram.

Bandwidth Setting

The bandwidth setting is a direct input to the microcomputer U_1, as shown in Figure 56. The setting grounds a specified input of the microcomputer, resulting in a fixed bandwidth for the control program.

Time Delay

The time-delay section of the printed circuit board, shown in Figures 57 and 58, obtains a +5.0-volt reference supply that is fed through resistor R_{22}. The time delay setting resistor R_{34} supplies the input to terminal 5 of the microcomputer U_1. The adjustable resistor R_{16} is used to calibrate the time-delay circuit.

Motor Relays and Output Logic

The motor relays, indicators, output logic and drivers section of the printed circuit receive the output of microcomputer U_1, as seen in Figures 59 and 60. The output logic inhibits signals to both relays during power up. The drivers change the low-level output of the microcomputer to a high level output that can activate the relays and indicators. The +5.1-volt power supply and pull-up resistors in R_{23} increase the drivers input.

A power supply bus of +28 volts provides power to the relay coils. Relay coils KR and KL are directly connected to drivers U_5 output terminals 13 and 11, respectively.

The raise and lower relays have one normally open contact and one normally closed contact. In the raise circuit, for example, a normally open contact KR2 is connected in series with the normally closed contact KL1 of the lower relay. In the unlikely event that a control circuit malfunction would occur, causing simultaneous raise and lower signals, neither the raise nor the lower relay would operate the tap changer.

The band edge indicators, low (DS_1) and high (DS_2), are connected on one end to U_5 at terminals 16 and 15, respectively, through current-limiting resistors R_{33} and R_{32}. The other end of the band edge indicators is attached to the +28-volt power supply.

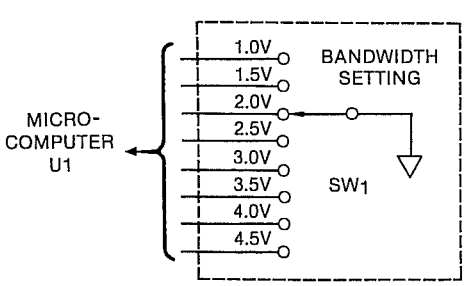

Figure 56.
Bandwidth setting schematic.

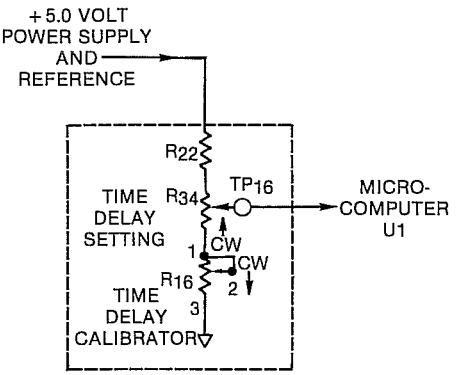

Figure 57.
Time-delay schematic.

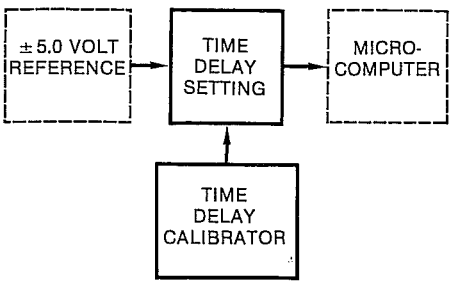

Figure 58.
Time-delay logic diagram.

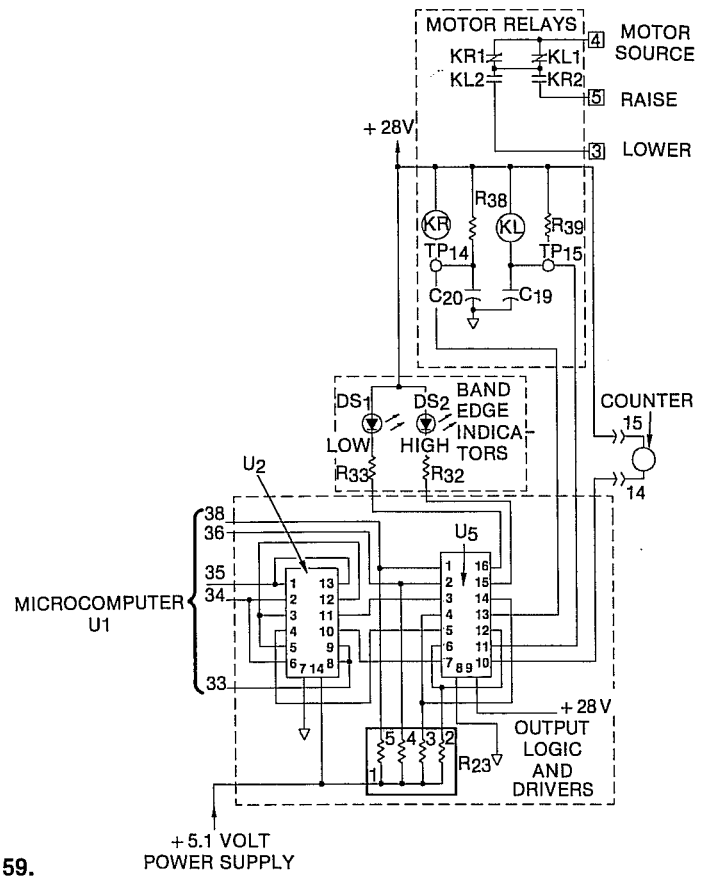

Figure 59.
Motor relays, indicators, output logic and drivers schematic.

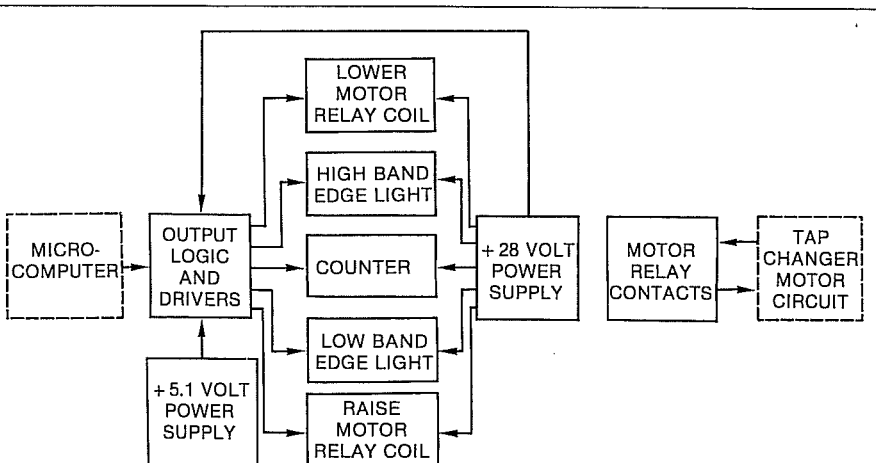

Figure 60.
Motor relays, indicators, output logic and drivers logic diagram.

Motor Current Sensing Circuit

After the time-delay section times out, a signal from microcomputer U_1 initiates a tap changer operation from the motor relays and drivers. When the motor begins to turn, the cam-operated holding switch on the tap changer closes. The tap changer is then energized independently of the manual or automatic positions of the control switch. While the holding switch is engaged, the motor current is fed through transformer T_2, which is the input to the motor current sense section of the printed circuit board (Figures 61 and 62). Diodes CR_{19} and CR_{20} limit the amount of motor current sensed by transformer T_2. These diodes will maintain the same voltage level at T_2 for both spring- and direct-drive motor circuits. Diode CR_{11} rectifies the output of transformer T_2 and Zener diode CR_{18} limits the voltage that can be applied to terminal 10 of the microcomputer U_1. Resistors R_{19} and R_{20} and capacitor C_9, filter this input.

The motor current sense signal is then transferred to the motor relays and drivers circuit, opening either the raise (KR) or lower (KL) relay, prior to completion of the tap change removing the motor load duty from the relays. In addition the signal operates the operations counter and is fed to the time-delay circuit, inhibiting the time-delay reset during completion of a tap change. Once the holding switch opens, the motor current ceases and the output of T_2 is removed.

Microcomputer

The microcomputer (U_1) is the heart of the CL-2 regulator control. The microprocessor-based logic insures dependable and precise operation. The single chip, 8-bit microcomputer has the capability to convert the inputs of the printed circuit board sections from an analog to digital code that can be understood by the control processor. The regulator control operations are established through the digital information along with the internal programming in the microcomputer's memory (Figures 63 and 64).

The reset circuit for the microcomputer is comprised of resistors R_{35}, R_{36} and R_{41}, capacitor C_{11}, diodes CR_{12} and CR_{24}, transistor Q_1 and the +5.1-volt power supply. This input circuit is used to initialize the microcomputer by clearing status flip-flops and setting the program counter to zero during power-up.

Microcomputer U_1 contains its own on-board oscillator and clock circuit. The crystal (Y_1) serves as the timing control.

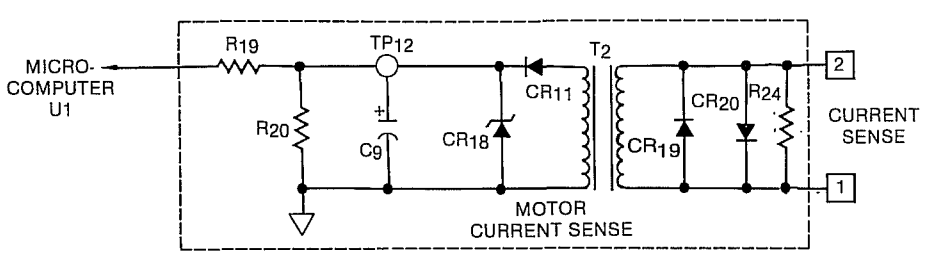

Figure 61.
Motor current sense schematic.

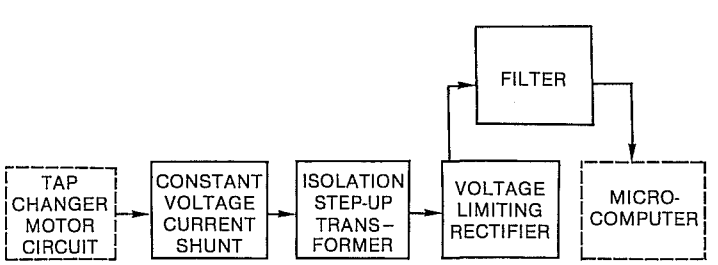

Figure 62.
Motor current sense logic diagram.

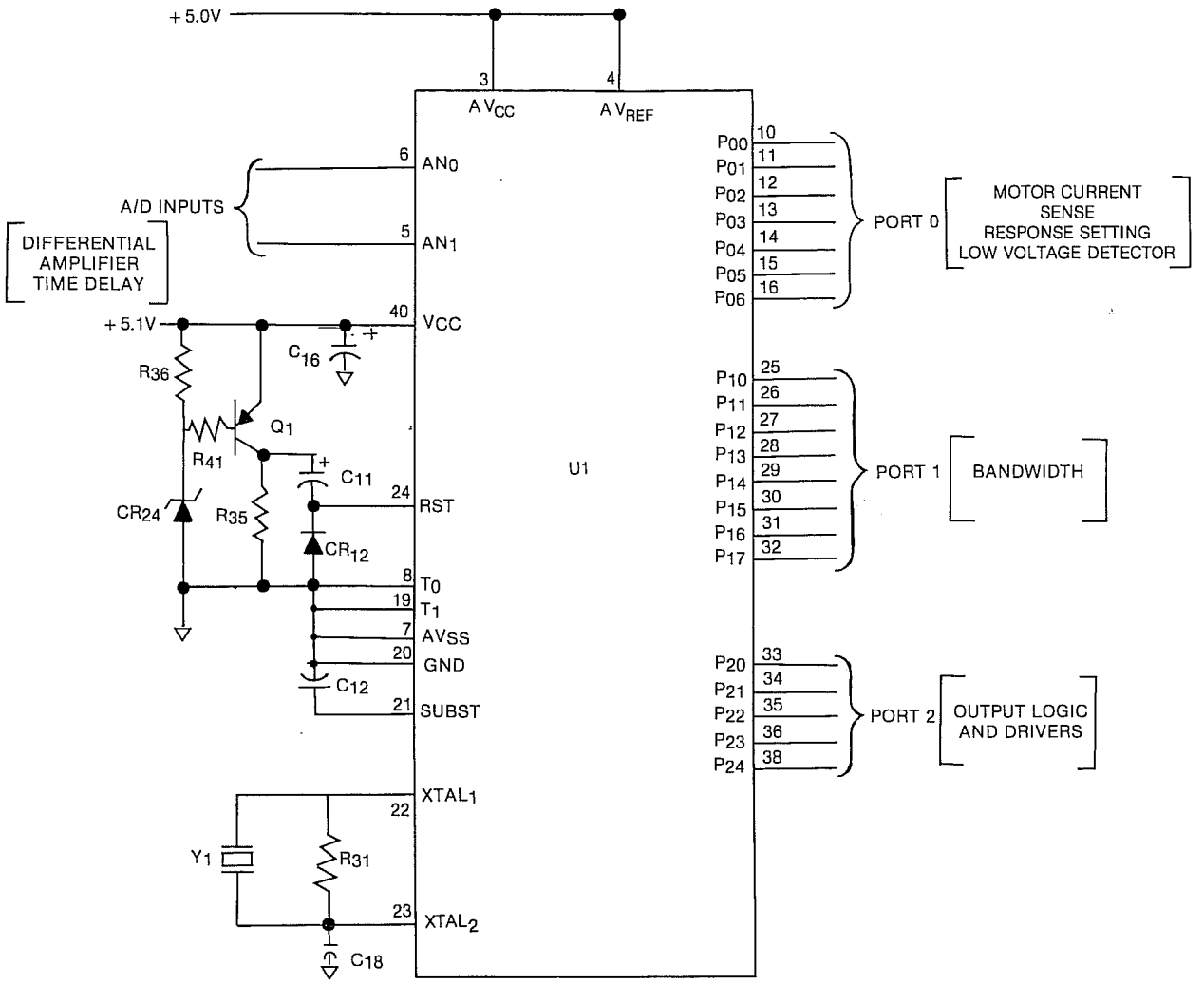

Figure 63.
Microcomputer U1 schematic.

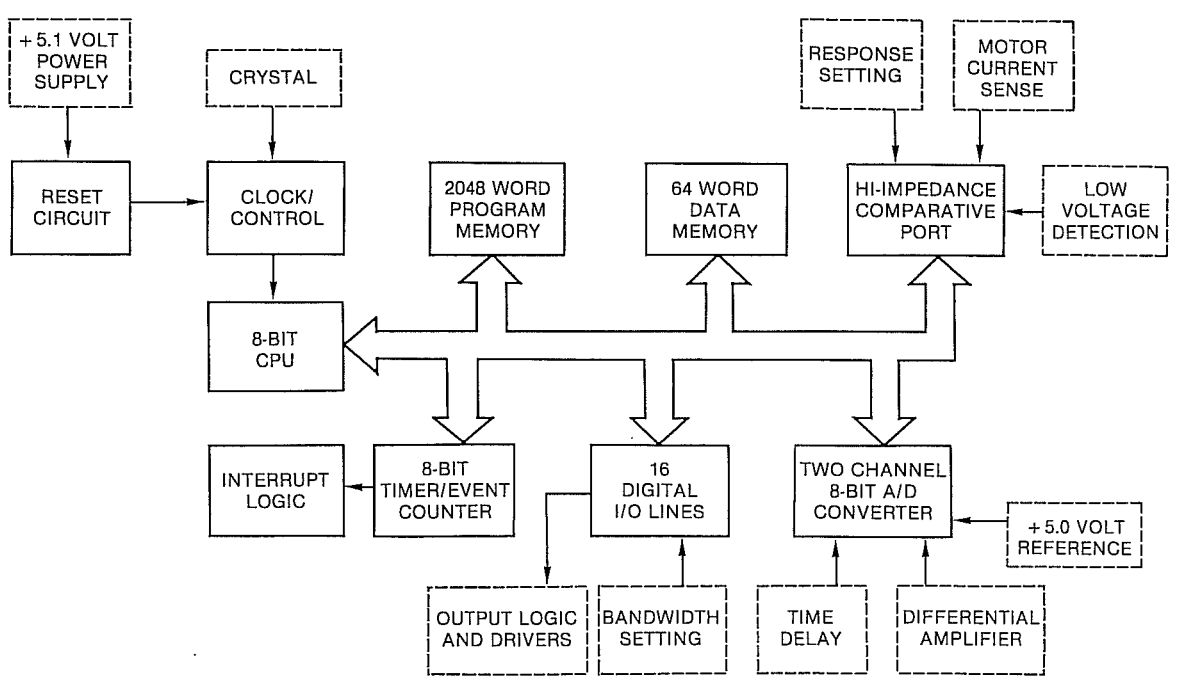

Figure 64.
Microcomputer U1 logic diagram.

TAP CHANGER OPERATION

Spring- and Direct-drive Tap Changers

Regulators for low-current applications employ stored-energy spring-drive tap changers. Commonly they are used on ratings 220 amps and below. The tap changer for a specific rating is shown on the rating plate. Figures 65 (95 BIL) and 66 (150 BIL) illustrate typical spring-drive mechanisms. On regulators manufactured January 1976 or later, the model number will be stamped in the drive frame area. Common models are either 859 or 928 (Figure 65) and 170 (Figure 66), followed by a suffix letter.

Voltage regulators used in medium- and high-current applications employ direct-motor-driven tap changers. They have the motor directly connected to the contacts through a geneva gear, pinion and scroll cam. Direct-drive tap changers are commonly applied above 220 amps. Both the mid-current, Model 770B (Figure 67) and high-current, Model 660C (Figure 68) are rated 150 BIL. See Table 7 for application chart of tap changer models.

MOTOR

The motor for the spring-drive tap changer is a capacitor run reversing gear motor suitable for operation at 120 volts ac, single-phase, at 50/60-Hz. An integral braking mechanism controls motor coast.

The motor for the direct-drive tap changers is a capacitor-start, capacitor-run, high-torque, reversing, gear-motor rated 115 volts ac, single-phase, at 50/60-Hz, with an internal magnetically disengaging braking mechanism.

All components are compatible with hot transformer oil and the windings are oil cooled. The motor will carry locked-rotor current for at least 3000 hours.

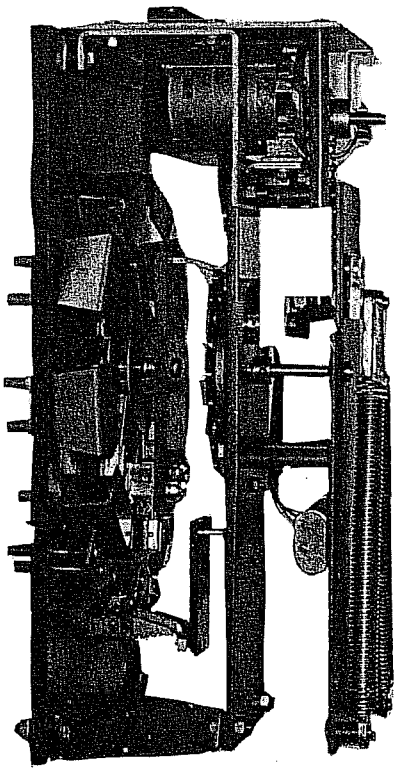

Figure 65.
928 spring-drive tap changer.

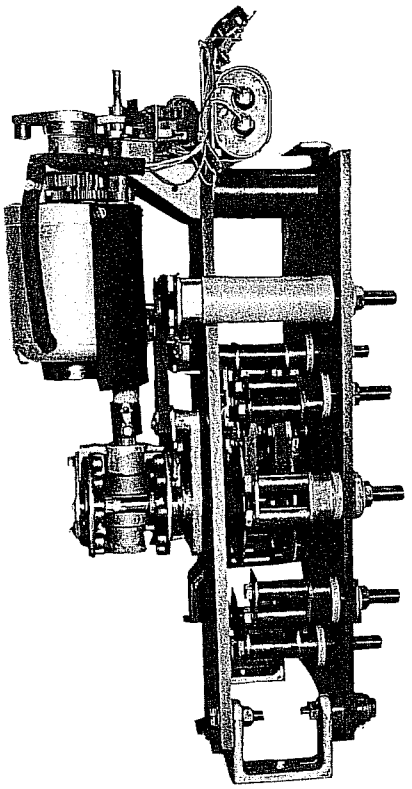

Figure 67.
770 direct-drive tap changer.

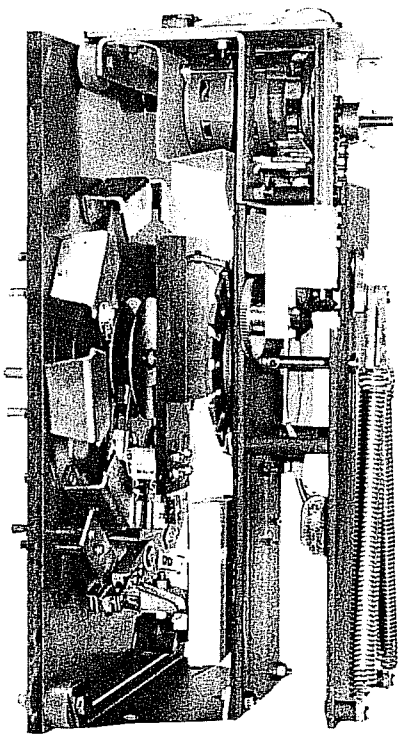

Figure 66.
170 spring-drive tap changer.

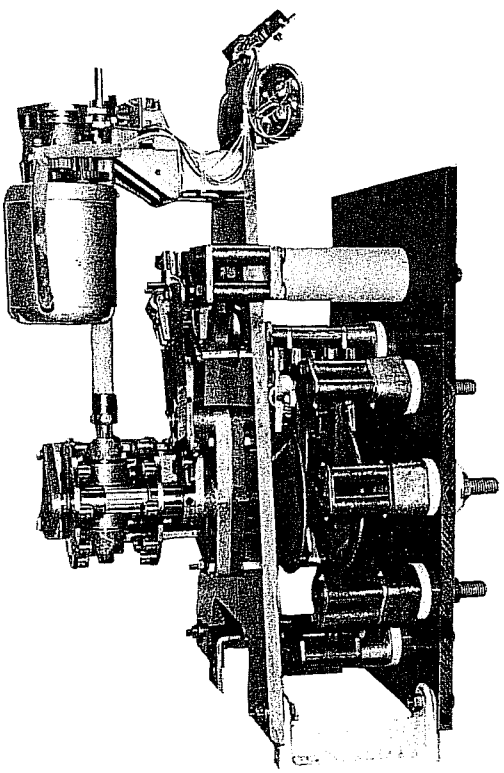

Figure 68.
660 direct-drive tap changer.

Table 7
Application Chart of Tap Changer Models

Volt (kV)	Load Current (Amp)	kVA	Catalog Number	Tap Changer
2.5	100	25	*RSAA025025AA	928D
	200	50	*RSAA025050AA	928D
60 kV BIL	300	75	*RSAA025075AA	770B
	400	100	RSAA025100AA	660C
	500	125	RSAA025125AA	660C
	668	167	*RSAA025167AA	660C
	1000	250SD	RSAA025250AA	770B
	1332	333SD	RSAA025333AA	770B
	1665	416SD	RSAA025416AA	770B
5.0	50	25	RSAA050025AA	928D
	100	50	RSAA050050AA	928D
75 kV BIL	200	100	RSAA050100AA	928D
	250	125	RSAA050125AA	770B
	334	167	*RSAA050167AA	770B
	500	250S	RSAA050250AA	660C
	668	333S	RSAA050333AA	660C
	833	416S	RSAA050416AA	660C
7.62	50	38	*RSAA076038AA	928D
	75	57	*RSAA076057AA	928D
95 kV BIL	100	76	*RSAA076076AA	928D
	150	114	*RSAA076114AA	928D
	219	167	*RSAA076167AA	928D
	328	250S	*RSAA076250AA	770B
	438	333S	*RSAA076333AA	660C
	548	416S	*RSAA076416AA	660C
	656	500S	RSAA076500AA	660C
	875	667S	RSAA076667AA	660C
	1093	833SD	RSAA076833AA	660C
13.8	50	69	RSAA138069AA	170C
	100	138	RSAA138138AA	170C
95 kV BIL	150	207	RSAA138207AA	170C
	200	276S	RSAA138276AA	170C
	300	414S	RSAA138414AA	770B
	362	500S	RSAA138500AA	660C
	483	667S	RSAA138667AA	660C
	604	833S	RSAA138833AA	660C
14.4	50	72	*RSAA144072AA	170C
	100	144	*RSAA144144AA	170C
150 kV BIL	200	288S	*RSAA144288AA	170C
	231	333S	RSAA144333AA	770B
	289	416S	RSAA144416AA	770B
	300	432S	* RSAA144432AA	770B
	347	500S	RSAA144500AA	660C
	400	576S	RSAA144576AA	660C
	463	667S	RSAA144667AA	660C
	500	720S	RSAA144720AA	660C
	578	833S	RSAA144833AA	660C
19.92	25.1	50	*RSAA199050AA	170C
	50.2	100	*RSAA199100AA	170C
150 kV BIL	100.4	200S	*RSAA199200AA	170C
	167	333S	RSAA199333AA	770B
	200.8	400S	RSAA199400AA	770B
	251	500S	RSAA199500AA	770B
	335	667S	RSAA199667AA	660C
	418	833S	RSAA199833AA	660C

Type: - Pole
S - Station Mount
D - Duplex Coils

* Stock Design

REVERSING SWITCH

The reversing switch function changes the polarity of the tapped winding. When the spring-drive tap changer is in the neutral position, the reversing switch is open. When the direct-drive tap changer is in the neutral position, the reversing movable contact is in contact with the lower reversing stationary contact (VL).

The load current on all types is carried from the source bushing through the reactor, slip rings, main movable contacts and neutral stationary contact to the load bushing.

The reversing switch motion on the spring-drive tap changer occurs as the main movable contacts enter or leave the neutral position. A pin in the contact drive sprocket assembly engages a slot in the reversing segment when the main switch is in the neutral position. The first tap step, in either direction, rotates the segment and the reversing switch engages the appropriate reversing stationary.

The drive sprocket pin and reversing segment provide a mechanical stop located approximately 320 degrees on either side of neutral. When the pin engages the end of the segment, the spring-drive mechanism will be loaded and will lock to prevent any further motion in that direction.

The reversing switch motion, on the direct-drive tap changers, occurs as the main movable contact moves from neutral to the first raise position. On the Model 770B tap changer, a roller on the back side of the rear roller plate engages a slot in the reversing segment on the reversing insulating arm. On Model 660C tap changer, a pinion, mounted on the same shaft as the rear roller plate, engages a slot in the reversing segment on the reversing insulating arm. As the rear roller plate rotates, the reversing movable contacts are driven from the (VL) reversing stationary contact.

DRIVE SPRINGS (SPRING-DRIVE ONLY)

Two steel extension springs are arranged in a triangular configuration to provide positive "spring-over-center" action to move the switch contacts. The mechanism is adjusted for smooth make-and-break contact action.

DRIVE MECHANISM (DRIVE-DIRECT ONLY)

The 770B and 660C tap changers employ drive mechanisms based upon the same design principle, and many components are interchangeable. The motor turns a geneva pinion three complete revolutions per tap change. The motion of the geneva pinion turns a six-tooth geneva gear, a main drive shaft, and a scroll cam 180 degrees per tap change. Each 180-degree movement of the scroll cam operates one of two roller plates and moves the corresponding main movable contacts 40 degrees. The combination of geneva gearing and scroll cam characteristics results in a three-step, wipe/transfer/wipe contact action.

Attached to the main (geneva gear) drive shaft is a planetary gear-type mechanical stop which prevents contact motion beyond the maximum raise and lower position.

Operating Sequence-Spring-Drive Tap Changers

When the spring-drive switch is in the neutral position, and the control calls for a tap change, the following events occur:

1. Motor brake releases and motor starts.
2. Motor holding switch closes, assuring that one tap change will be completed.
3. The up slope of sprocket cam engages lip of the spool. This lifts the pin, in the pin cam and frees it of the hole in the actuator.
4. A projection on sprocket cam contacts leg on pin cam and both turn.
5. Drive shaft, which is attached to pin cam, begins to turn crank arm and springs begin to extend.
6. Pin comes free from the lip on the spool and a spring pushes it against surface actuator.
7. Down slope of sprocket cam returns spool to start position.
8. Pin drops into hole in actuator 180 degrees from start position.
9. At this point, the crank arm is at top dead center and the springs are fully loaded. Drive shaft and crank arm, sprocket cam, pin cam, and actuator are locked together and connected through the chain to the motor.
10. Motor drives all parts beyond top dead center.
11. Spring unloads, instantaneously pulling pin cam and actuator through 180 degrees at high speed. Pins on actuator cause contact drive sprocket to index one tap position.
12. As the contact drive sprocket moves, it imparts motion to the reversing switch segment and main movable contacts. This action closes the reversing movable and reversing stationary contacts, and drives the main movable contact onto the adjacent main stationary contact. Also, the neutral light switch opens.
13. Motor continues to turn sprocket cam until the motor holding switch opens. The gear motor output shaft has completed one revolution.

Should more than one tap change be required, the foregoing sequence will be repeated (except reversing switch portion) until the control is satisfied, or the limit switch in the position indicator is reached.

Operating Sequence-Direct-Drive Tap Changer

When the switch is in neutral and the control calls for a tap change in the raise direction, the following events occur:

1. Motor brake releases and motor starts.
2. Geneva pinion rotates counterclockwise to engage geneva gear.
3. Geneva pinion drives the geneva gear, main drive shaft, and scroll cam through 60 degrees and produces initial wipe action at the front main movable contact and reversing movable contacts.
4. The motor holding switch closes, assuring that one tap change will be completed.
5. The geneva pinion completes first revolution and continues to rotate.
6. The gevena pinion drives geneva gear through 60 degrees and the scroll cam and roller plates transfer the front main movable contacts from the neutral stationary contact N to the stationary contact No. 1. Simultaneously, the reversing movable contact is transferred from the reversing stationary contact (VL) to the stationary contact (VR).
7. The neutral light switch opens.
8. The geneva pinion completes second revolution and continues to rotate.
9. The geneva pinion drives geneva gear, main drive shaft, and scroll cam through 60 degrees and produces final wipe action at the front main movable and reversing movable contacts.
10. The motor holding switch opens.
11. The motor brake engages.
12. The motor stops.

A tap change from No. 1 raise position to neutral will be accomplished as described, except the geneva pinion will rotate clockwise. The reversing movable contact will be transferred from the reversing stationary contact (VR) to the stationary contact (VL).

Contacts

Several connection conditions are satisfied by the variety of contact structures. They are divided into arcing and non-arcing.

The non-arcing contacts consist of front and rear slip rings which serve as the connection point for opposite ends of the reactor windings and one end of the two main movable contacts. All contact surfaces are Electrical Tough Pitch (ETP) copper and all joints are riveted, bolted, or brazed to maintain a high-conductivity current path. Contact pressure between moving points is maintained by steel leaf springs (in the spring-drive tap changers) or by opposing steel compression springs (in the direct-drive tap changers) that have been copper coated to provide opti mum conductivity. The main movable contact is split to make contact on both surfaces of the slip ring and resist separation in the event of high-current surges.

There are several types of arcing contacts on a regulator tap changer. They can be divided into two catagories, stationary and movable.

1. The main stationary contacts are connected to the series-winding taps. The main movable contacts connect the slip rings to the main stationary contacts.
2. The reversing stationary contacts are connected to opposite ends of the series winding. The reversing movable contacts connect the neutral stationary contacts and load bushing to the reversing stationary contact.

   NOTE: The neutral stationary contact in the direct-drive tap changer has both arcing and non-arcing contact conditions.

All stationary contact bodies are made of ETP copper. Copper-tungsten inserts are brazed to the edges of the stationary contacts which are subject to damage from impact or arcing duty. The arcing end of the main movable contacts use a copper-tungsten tip. The contact is split to make contact on both sides of the mating contacts. This split resists separation in the event of high-current surges.

The direct-drive tap changer stationary contact body is copper. Copper tube spacers and steel bolts are employed to fasten all parts and provide a high conductivity current path.

The reversing movable contacts are the same construction as the main movable contact.

The 660C direct-drive tap changer employs a double set of reversing movable contacts and silver-tungsten arcing ends to satisfy the high-current rating.

Contact erosion is a function of many variables such as tap voltage, load current and power factor, reactor design and tapped winding design.

Stationary contacts should be replaced before the arcing inserts erode to the point where there may be burning on the copper. Movable contacts should be replaced when approximately 1/8 in. of smooth rubbing surface remains. Refer to *S225-10-2* for complete information and typical erosion patterns for the various stages of contact life.

TROUBLESHOOTING GUIDE COMPLETE REGULATOR IN SERVICE (PART 2)

When service personnel arrive at what appears to be a malfunctioning regulator, it is advisable to examine the power connections. For example, verify that the source lead is connected to the source bushing, that the load lead is connected to the load bushing, and that the source-load lead is connected to the source-load bushing. Check other potential problems, such as an open ground connection.

CAUTION
Always use the CONTROL switch to operate the regulator. Do not use the power switch for this function.

Figures 69 and 26 should be used while troubleshooting the regulator.

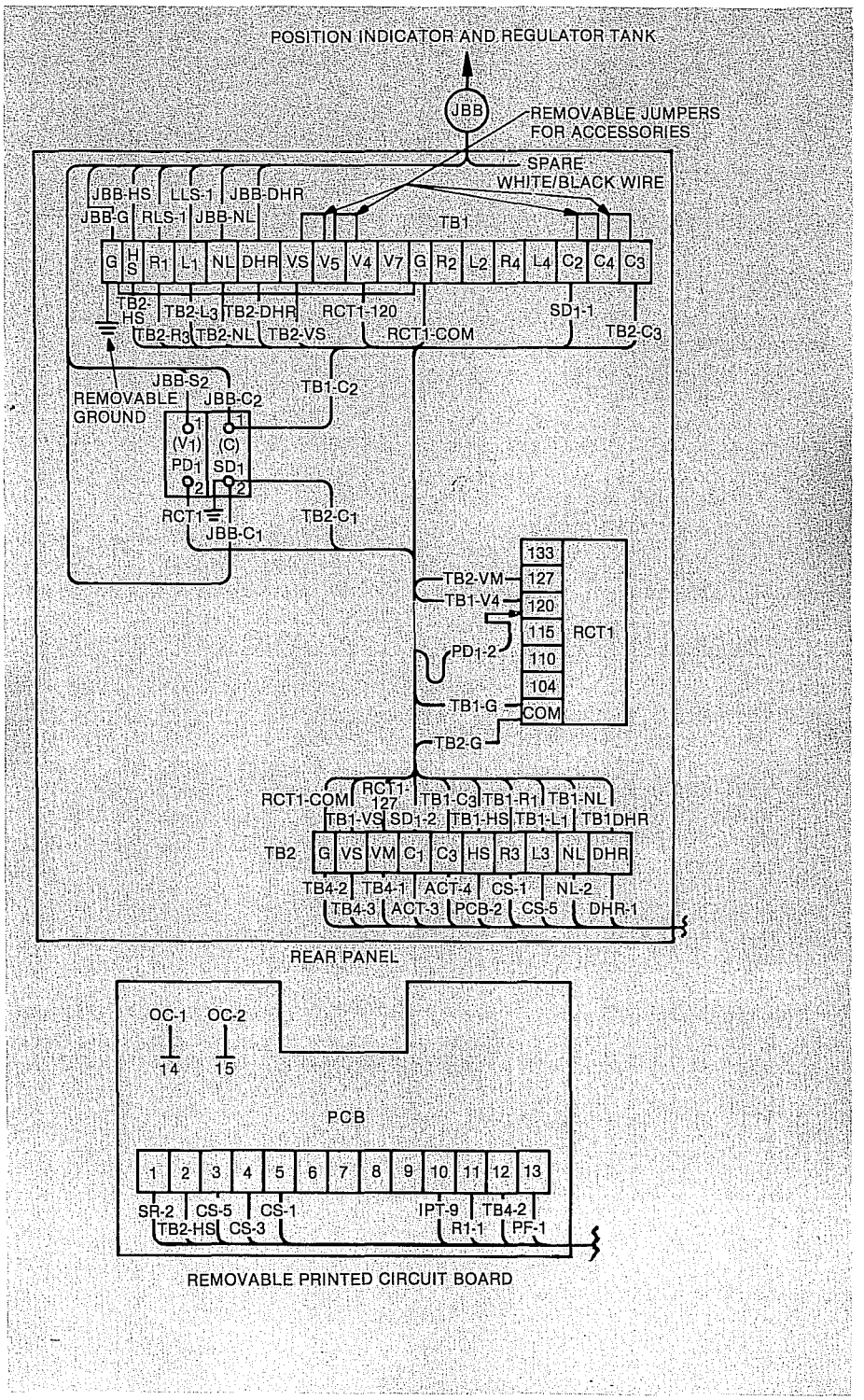

Figure 69.
Physical wiring.

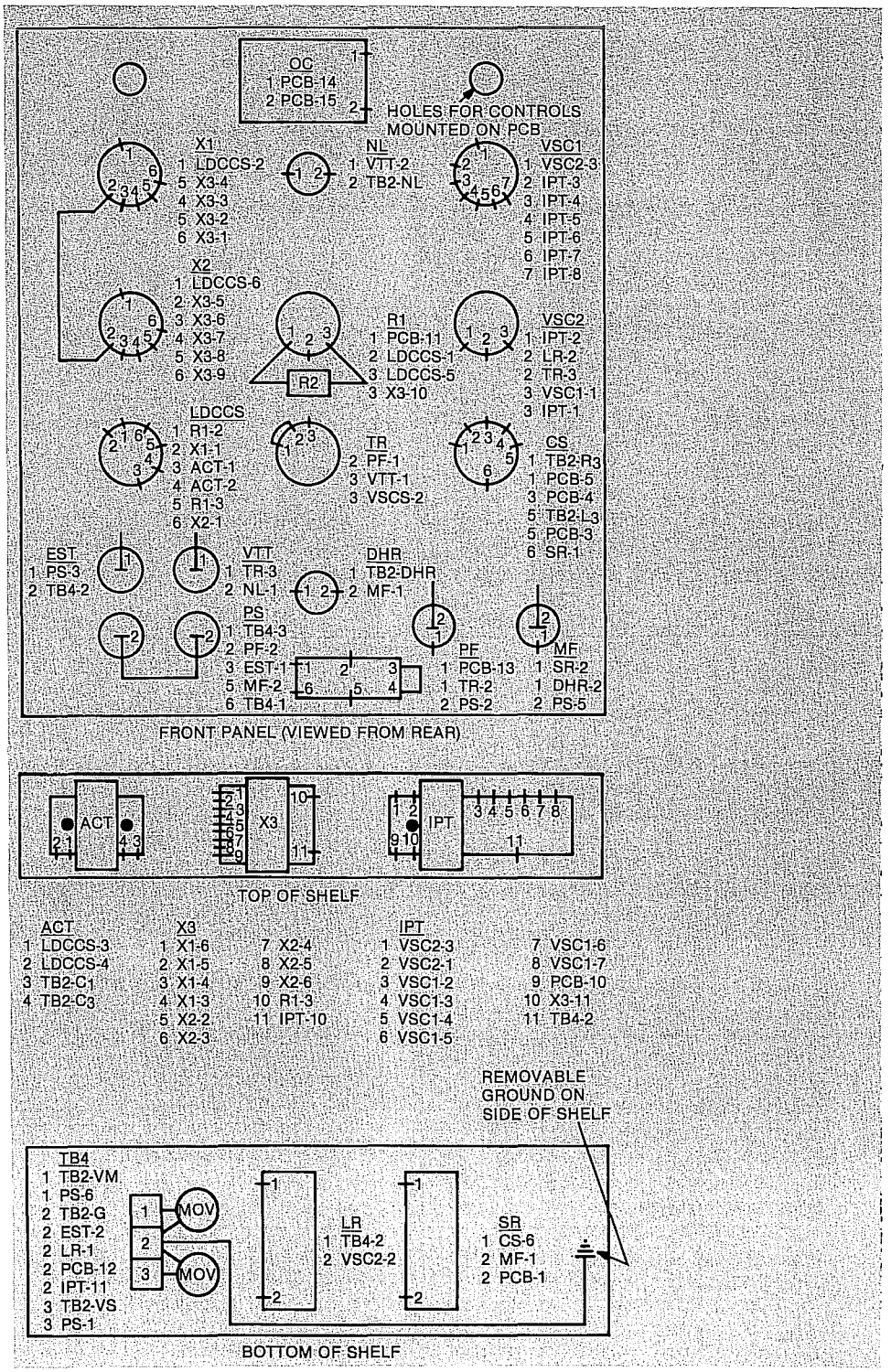

COLOR CODING CHART
TB1-G TO JBB-G WHITE
PD_1-1 TO JBB-S_2 BLACK
SD_1-2 TO JBB-C_1 RED
SD_1-1 TO JBB-C_2 GREEN
TB1-HS TO JBB-HS ORANGE
TB1-R_1 TO RLS-1 BLUE
TB1-L_1 TO LLS-1 GREEN/BLACK
TB1-NL TO JBB-NL RED/BLACK
TB1-DHR TO JBB-DHR ORANGE/BLACK
TB1-HS TO TB2-HS ORANGE
TB1-R_1 TO TB2-R_3 BLUE
TB1-L_1 TO TB2-L_3 WHITE/GREEN
TB1-NL TO TB2-NL WHITE/RED
TB1-DHR TO TB2-DHR WHITE/ORANGE
TB1-G TO RCT1-COM WHITE
TB1-V_1 RCT1-120 BLACK
TB1-VS TO TB2-VS BLACK
TB1-C_2 TO SD_1-1 VIOLET
TB1-C3 TO TB2-C_3 GREEN
RCT1 TO PD_1-2 BLACK
TB2-G TO RCT1-COM WHITE
TB2-VM TO RCT1-127 WHITE/BLACK
TB2-C_1 TO SD_1-2 RED
TB2-G TO TB4-2 WHITE
TB2-VS TO TB4-3 BLACK
TB2-VM TO TB4-1 WHITE/BLACK
TB2-C_1 TO ACT-3 RED
TB2-C_3 TO ACT-4 GREEN
TB2-HS TO PCB-2 ORANGE
TB2-R_3 TO CS-1 BLUE
TB2-L_3 TO CS-5 WHITE/GREEN
TB2-NL TO NL-2 WHITE/RED
TB2-DHR TO DHR-1 WHITE/ORANGE
PCB-1 TO SR-2 WHITE/BLACK
PCB-3 TO CS-5 WHITE/GREEN
PCB-4 TO CS-3 WHITE/BLUE
PCB-5 TO CS-1 BLUE
PCB-10 TO IPT-9 RED
PCB-11 TO R1-1 RED
PCB-12 TO TB4-2 WHITE
PCB-13 TO PF-1 BLACK
PCB-14 TO OC-1 BLACK
PCB-15 TO OC-2 BLACK
X1-1 TO LDCCS-2 BLUE
X1-3 TO X3-4 GREEN
X1-4 TO X3-3 BLUE
X1-5 X3-2 VIOLET
X1-6 TO X3-1 WHITE
X2-1 TO LDCCS-6 BROWN
X2-2 TO X3-5 BLACK
X2-3 TO X3-6 BROWN
X2-4 TO X3-7 RED
X2-5 TO X3-8 ORANGE
X2-6 TO X3-9 YELLOW
LDCCS-3 TO ACT-1 YELLOW
LDCCS-4 TO ACT-2 RED
LDCCS-5 TO R1-3 WHITE/BLUE
LDCCS-1 TO R1-2 WHITE/BROWN
EST-1 TO PS-3 BLACK
EST-2 TO TB4-2 WHITE
EST-2 TO VTT-2 WHITE
NL-1 TO VTT-2 WHITE
R1-3 TO X3-10 WHITE/BLACK
TR-2 TO PF-1 BROWN
TR-3 TO VTT-1 WHITE/VIOLET
TR-3 TO VSC2-2 WHITE/VIOLET
DHR-2 TO MF-1 WHITE/BROWN
PS-1 TO TB4-3 BLACK
PS-2 TO PF-2 BLACK
PS-5 TO MF-2 WHITE/BLACK
PS-6 TO TB4-1 WHITE/BLACK
VSC1-1 TO VSC2-3 BLUE
VSC1-2 TO IPT-3 BROWN
VSC1-3 TO IPT-4 ORANGE
VSC1-4 TO IPT-5 YELLOW
VSC1-5 TO IPT-6 GREEN
VSC1-6 TO IPT-7 VIOLET
VSC1-7 TO IPT-8 WHITE
VSC2-1 TO IPT-2 BLUE
VSC2-2 TO LR-2 WHITE/VIOLET
VSC2-3 TO IPT-1 GRAY
SR-1 TO CS-6 WHITE/BLACK
SR-2 TO MF-1 WHITE/BLACK
LR-1 TO TB4-2 WHITE
IPT-10 TO X3-11 WHITE/RED
IPT-11 TO TB4-2 WHITE
TB1-G TO GRD WHITE
TB1-G TO TB1-G WHITE
X1-2 TO X2-2 GREEN

After the external power connections have been checked, check the voltage-disconnect knife switch (V_1) and the current shorting knife switch (C) of the rear panel signal circuit in the control box. Close the voltage disconnect, if open. Open shorting switch, if closed.

Check for loose connections or burnt wiring.

Make sure ratio-correcting transformer RCT1 is on the correct tap for the regulated voltage shown on the nameplate on the control box door.

Run the regulator to the neutral position with the control switch. Check for voltage between V_4 and G on TB1. This is the sensing circuit supply voltage from the output of RCT1 on the rear panel. If this voltage is more than 10% above or below the programmed voltage level setting of VSC1 and VSC2, then the source is beyond the range of the regulator. An absence of voltage would indicate a wiring problem such as an opening somewhere in the control power supply.

A voltage check at the voltage disconnect switch between PD_1-1 (V1) and ground (G) will verify the presence of voltage. An absence of voltage here will indicate problems inside the tank, junction box, or control cable. Junction box troubleshooting on page 50 will confine any problem area.

Remove the motor and panel fuses from the control and check for continuity across each fuse. Spares, if needed are included with the control.

CAUTION
Use only 350 Vac, slow blow ceramic fuses. McGraw-Edison part code No. 1064 (motor) or 1065 (panel).

After the above checks have been made and the problem is not external to the regulator, follow the procedure outlined below to complete the analysis of the problem.

CAUTION
At this point, further investigation will require the disconnection of certain leads within the control for test purposes. While making these changes, the potential disconnect for V1 should be open and the shorting switch (C) closed.

Three problems that can occur are as follows:

I. **Nature of trouble:** The regulator will not operate manually or automatically.

Diagnosing trouble:

A. Set the CONTROL switch on RAISE.
B. Measure the voltage between terminals R_1 and G on terminal board TB1. The voltage reading should be approximately 120 volts ac.
C. Set the CONTROL switch on LOWER.
D. Measure the voltage beween terminals L_1 and G on terminal board TB1. The voltage reading should be approximately 120 volts ac.
E. If correct voltage readings are obtained in steps B and D above, the trouble may be in the position indicator, junction box, or control cable. Refer to the junction box troubleshooting section on page 50.
G. If there is no voltage measurement in either step B or D, make a corresponding measurement (R_3 to G and L_3 to G) on lower terminal board TB2.
H. If the voltages measured in Step G are approximately 120 volts ac then the fault is likely a loose connection or a faulty terminal swage between TB1 and TB2.
I. If steps B, D, and G do not provide voltage readings, measure the voltage between VM and G on terminal board TB2. The reading should be approximately 120 volts ac.
J. If Step I does measure correctly, the trouble could be an open resistor (SR), motor fuse, power switch, or control switch of the control.
K. If Step I does not yield a voltage measurement check the voltage between PD_1-1 (V1) and ground (G) at the voltage disconnect knife switch.
   1. If approximately 120 volts ac is obtained, the V1 disconnect or the ratio correcting transformer (RCT1) of the rear panel signal circuit is probably faulty.
   2. If voltage is not obtained, the trouble is in the control cable, junction box, or regulator tank. Refer to the junction box troubleshooting section on page 50. If the junction box checks are satisfactory, the trouble is in the regulator tank. See *S225-10-2* for the troubleshooting method.

II. **Nature of trouble:** The regulator will operate manually but not automatically.

Diagnosing trouble:

A. Measure voltage from VS to G on lower terminal board TB2.
   1. A measurement of approximately 120 volts ac at VS to G indicates that the problem is in the control.
   2. If there is no voltage present at VS to G, the trouble is in the V1 disconnect or ratio-correcting transformer of the rear signal circuit.
B. If check A indicates that the trouble is in the control, refer to pages 51-52 for troubleshooting the control.
   1. If the BAND LIMIT indicators do not function, the trouble could be with the panel fuse, power switch, or voltage divider circuit (see page 24).
   2. If the BAND LIMIT indicators do function properly, check the relays. They should close after the time delay. If the relays close, then the trouble could be in the relay contacts. An indication of problems with the contacts is that the tap changer will run in one direction (raise or lower) and not the other.
C. If the trouble has not been located at this point, then replace or troubleshoot the printed circuit board, using instructions on pages 52-54.

III. **Nature of Trouble:** Regulator operates manually but runs to one end of the range when the control is set on automatic.

Diagnosing Trouble: The malfunction is probably in the control. Refer to the control troubleshooting instructions on page 51-52.

CAUTION
The printed circuit board should have "revision C" printed on the lower side. If it does not, contact the factory for replacement instructions.

Calibration Check

McGraw-Edison regulator controls are factory calibrated in accordance with procedures described in this bulletin.

Two response settings are provided to assist the calibration of bandwidth, voltage level setting and time delay. Refer to Table 8 for proper application of dipswitches (jumpers on initial units).

The response setting for bandwidth and voltage level calibration will not interfere with normal operation and can remain closed.

The band edge indicators are used as zero indicators to display correct calibration. Once the response mode is activated, the high- or low-band edge indicator will flash when the voltage is in-band, using a progressively shorter flash as the band center is approached. Both indicators will be off when the voltage is at mid-band. As the voltage moves out of band, the indicator will light continuously when the band edge is reached.

The time-delay calibration setting allows a check of the time delay at one dial setting (65 seconds) against the crystal clock of the microcomputer. This setting also uses the band limit lights to assist in the calibration.

The optimum calibration is achieved by using the instrumentation and following the procedures suggested herein. An indication of correct calibration can be obtained by using a multimeter of the type commonly in use in the industry. Most of these meters respond to the average value, rather than the RMS value that the control does. In addition, harmonic content of the external source that is applied for the calibration check can further affect the accuracy of the reading. If a multimeter is employed rather than a true RMS-responding meter as specified herein, only indication of calibration can be obtained. Because the McGraw-Edison factory calibrates both the sensing circuit and the time-delay circuit, recalibration is only recommended in the event that components of the circuit board have been replaced by the user.

Table 8
Bandwidth, Voltage Level and Time-Delay Settings

Program	Dipswitch	Jumper
Bandwidth and Voltage Level	Position 3	J3
Time Delay	Position 5	TP6 to TP7

The time-delay setting may be checked during either method of calibration check. Turn the CONTROL SWITCH to an OFF position and proceed with the following steps:

1. Maintain the voltage in-band for at least ten seconds.
2. Quickly change the voltage to above or below band.
3. Time the appropriate relay until it closes.

Relay closure can also be marked by connecting a 5000 ohm/volt or higher dc meter from TP0 on the circuit board to either TP_{14} for RAISE or TP_{15} for LOWER. Measure approximately 28 volts dc when the relay is open and less than 2 volts dc when it is closed.

On-site calibration checks may be made in two general ways: 1) Regulator energized, and 2) Regulator not energized.

REGULATOR ENERGIZED

1. Turn the LDC (line-drop compensation) control switch to the OFF position.
2. Connect an accurate, true-RMS-responding voltmeter of at least 3000 ohms impedance to the VOLTMETER terminals.
3. Manually run the regulator three or four steps above the set point (Voltage Level Setting) of the control using the CONTROL SWITCH. Turn the CONTROL SWITCH to an OFF position.
4. Rotate the TEST RHEOSTAT counterclockwise from its AUTO position to bring the voltage within the bandwidth of the control.
5. Continue to rotate the TEST RHEOSTAT slowly counterclockwise until the LOW visual indicator just comes on. Record the voltage.
6. Rotate the TEST RHEOSTAT slowly clockwise until the HIGH visual indicator just comes on. Record the voltage.
7. The true set point of the control is the average of these measurements and the bandwidth is the difference.

REGULATOR NOT ENERGIZED

1. Turn the CONTROL SWITCH to an OFF position.
2. Switch the POWER switch to EXTERNAL.
3. Connect an accurate, true RMS-responding voltmeter of at least 3000 ohms impedance to the VOLTMETER terminals.
4. Switch the LDC control switch to OFF.
5. Connect a variable voltage source to the EXTERNAL SOURCE terminals. This source should present a harmonic content of not more than 5% for a good calibration check.
6. Increase the source voltage slowly until the HIGH visual indicator just comes on. Record the voltage.
7. Decrease the source voltage slowly until the LOW visual indicator just comes on. Record the voltage.
8. The true set point of the control is the average of these measurements and the bandwidth is the difference.
9. The TEST RHEOSTAT may also be used to vary the voltage as described above when regulator was energized, if the source voltage is several volts higher than the upper band limit.

Upon completion of either method of calibration check, the TEST RHEOSTAT must be returned to the AUTO position (fully clockwise) and the LDC control switch returned to its original position. The flashing band edge indicators can also be used in either of the above as in the *Recalibration* section.

Recalibration

This precise check should be made on a service bench with the control removed from the control box. (See instructions for control removal and replacement on page 14.

CAUTION
Use only a high impedance (3000 ohms minimum) RMS meter for measurements.

VOLTAGE LEVEL SETTING AND BANDWIDTH

1. Switch the POWER switch to EXTERNAL.
2. Switch the LINE-DROP COMPENSATION control switch to OFF.
3. Set the VOLTAGE SETTING control to 120 volts.
4. Set the BANDWIDTH control to 2 volts.
5. Connect an accurate, true-RMS-responding voltmeter of at least 3000 ohms impedance to the VOLTMETER terminals.
6. Connect a variable external 60/50-Hz voltage source with less than 5% harmonic content to the EXTERNAL SOURCE terminals.
7. Close dipswitch position 3 (connect a jumper across PCB terminals J3 on initial units).
8. Raise the applied voltage approximately 120 volts and adjust until the band indicators stop flashing, indicating mid-band.
9. The voltage applied should be 120 ±0.25 volts ac. If not, set the applied voltage to exactly 120 volts ac and adjust R_{12} (voltage level calibrator)on the printed circuit board until both indicators are off.
10. Slowly vary the input voltage up and down, noting the points that the HIGH and LOW visual indicators switch on. These points should be symetrical, and should be one volt above and one volt below the 120-volt nominal setting with an accuracy of 3% of one volt. If this is not true, proceed with the troubleshooting section, on page 51.

TIME DELAY

1. Rotate the TIME DELAY control counterclockwise against the stop. The knob indicator should point to the unscaled full counterclockwise mark on the panel.
2. If the knob and panel marks are not matched, loosen the set screw and reset the knob to the proper position.
3. Set the TIME DELAY control to 65 seconds.
4. Close dipswitch position 5 (connect a jumper from TP_6 to TP_7 on initial units). The band indicators should flash: LOW, if setting is below the calibration point, and HIGH, if the setting is above the calibration point. This will overide the flashing for voltage calibration.
5. Adjust R_{16} (time-delay calibrator) until both indicators stay off.
6. Open dipswitch position 5 (remove jumper between TP_6 and TP_7 on initial units).
7. Check other time delay values as in the calibration check procedure for reasonable tracking.

Junction Box Troubleshooting

This section is used if regulator will not operate manually. (Problem was isolated to junction box or regulator tank after checking-out control, on page 48.)

The junction box is composed of a terminal board, the position indicator, and the control box interconnections. Refer to Figure 70 when the following steps are made:

1. Remove the regulator from service, as stated on page 9.
2. Ground the three high-voltage bushings.
3. Open V_1 disconnect switch on rear panel of control cabinet.
4. Remove junction box lid.
5. Check the wiring on the junction box terminal board for loose connections, burnt wiring, or bad swage joints.
6. A. Set the POWER switch to EXTERNAL.
   B. Apply a 60/50 Hz, 120-volt ac nominal variable source to the EXTERNAL SOURCE terminals.
   C. Set the CONTROL switch on RAISE.
   D. Measure the voltage between terminals R and G on terminal board. The voltage reading should be approximately 120 volts ac.
   E. Set the CONTROL switch on LOWER.
   F. Measure the voltage between terminals L and G on terminal board. The voltage reading should be approximately 120 volts ac.
   G. If correct voltage readings are obtained in steps B and D above, the trouble is in the regulator tank. Refer to troubleshooting section of *S225-10-2.*
   H. If there is no voltage measurement in either step B or D, the problem is the limit switches inside the position indicator or the control cable.
7. Check the continuity of the raise and lower limit switches. The switches should be closed on all tap changer positions, except for the set limit switch positions of the indicator dial. To check the continuity:
   A. Remove position indicator green-black lead from splice terminals.
   B. Place the meter lead on the disconnected lead and the other lead on terminal L of the junction box terminal board. Then check continuity.
   C. If a continuity problem occurs, refer to *Position Indicator Replacement,* on page 51.
   D. Remove the position indicator blue lead from the splice terminal.
   E. Place the meter lead on the disconnected lead, and the other lead on terminal R of the junction box terminal board. Check continuity.

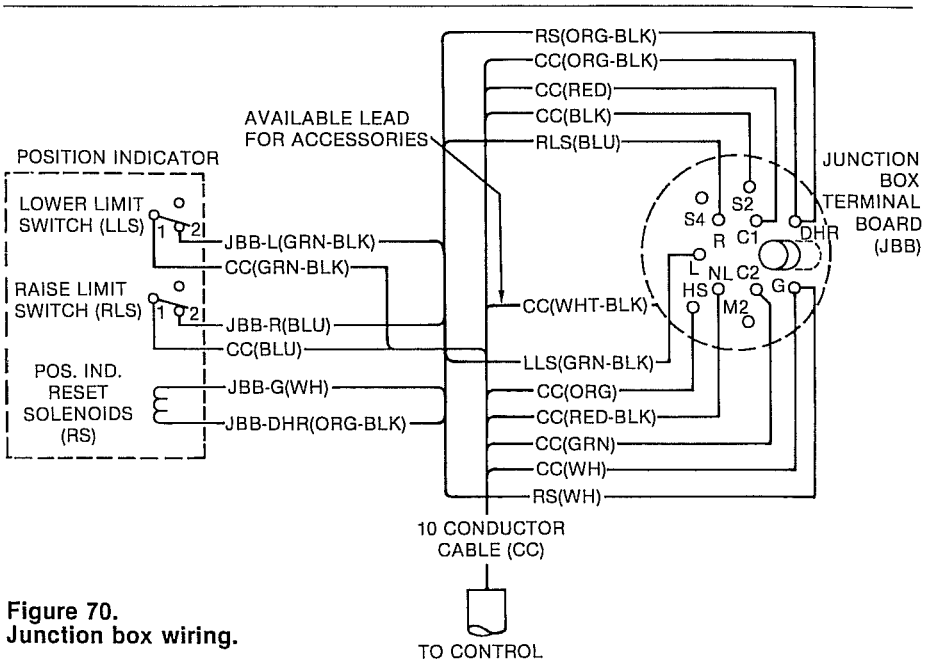

Figure 70.
Junction box wiring.

F. If a continuity problem occurs, refer to *Position Indicator Replacement,* on page 51.

8. Check the reset solenoid of position indicator. Push the DRAG HAND RESET button while measuring the voltage between DHR and G on the terminal board. The voltage reading should be approximately 120 volts ac and DRAG HANDS will reset.
   A. If 120 volts is read and drag hand will not reset, refer to *Position Indicator Replacement* on page 51.
   B. If 120 volts is not read; refer to *Control Troubleshooting,* on page 51.

Position Indicator Replacement

The following instructions apply only to the junction box mounted position indicator construction that was initiated in April, 1980.

To replace a defective position indicator requires removing the unit from service as outlined in "Removing from Service" on page 9.

CAUTION
Verify that the tap changer is in neutral via the neutral light on the control or visual inspection of the tap changer. If the position indicator does not also show neutral, refer to instructions in *S225-10-2, Spring-and-Direct Drive Tap Changers.*

1. Remove the junction box cover.
2. Note the location of the indicating hand for future alignment and disengage the flexible shaft from the position indicator shaft.
   A. In early 1986 this joint was changed to a set screw type coupling.
   B. Older equipment employed a cotter pin coupling.
3. Disconnect the four leads from the junction box terminal board and open the two splice terminals to the control cable.
4. Remove the three bolts holding the indicator to the junction box and slide the indicator free.
5. Remove the gasket from the groove on the back of the indicator body.
6. Clean the gasket surface of the junction box and the gasket and groove on the new indicator.
7. Place the gasket in the groove and insert the leads through the junction box wall, align the holes and install the three bolts finger tight.
8. Wrench-tighten the bolts to evenly compress the gasket and bring the indicator body tight against the junction box.
9. Connect the six leads to the terminal board and control cable leads per Figure 70 and secure all connections.
10. Turn the indicator drive shaft to place the hand at the previously noted position.
11. Slide the flexible shaft coupling over the indicator shaft and secure the joint.
12. Position the wire to prevent snagging on the coupling or cotter pin. Secure with the wraps.

CAUTION
A defect in the position indicator may have caused loss of synchronization between the tap changer and indicator hand.

13. Connect a 120-volt ac external power supply to the control.
14. Run the tap changer manually to verify alignment of the position indicator hand and the neutral light. If correction is required:
    A. Stop the tap changer with the neutral light on.
    B. Disconnect the flexible shaft from the back of the indicator.
    C. Turn the indicator shaft to center the hand at zero (neutral).
    D. Reconnect the flexible shaft.
15. Run the tap changer to both raise and lower extremes to check operation of the limit switches and coordination with holding switch.
16. Run between position nine raise and nine lower to check neutral light and position indicator alignment. Run several cycles.

CAUTION
Should the alignment of the PI and neutral light become unstable during this check, an internal inspection of the tap changer and position indicator shaft is required. See *S225-10-2* for instructions.

17. Return the tap changer to the neutral position and disconnect the power supply.
18. Replace the junction box cover.
19. Return the unit to service as outlined on page 8.

TROUBLESHOOTING THE CONTROL

If at this point, the problem has been determined to be in the control, the control front panel should be taken out of the control cabinet and taken to a service bench for troubleshooting.

Switches or rheostats should be tested before such things as transformers and reactors. Rheostat trouble is generally evident by sudden discontinuities in an observed voltage measurement as the control is rotated smoothly. In this section use Figures 26 and 69 to assist in troubleshooting.

Panel Components

Except for the line-drop compensation circuit, the panel components are checked by using an external voltage, approximately 120 volts ac, 60/50 Hz, applied on the external source terminals.

1. Place the power switch on the EXTERNAL position. Fuses should be double-checked before other components are evaluated.
2. Check the output voltage of terminals 2 and 5 to ground of the power switch. The output voltage should be equal to the external source voltage. If not, switch is bad.
3. Begin testing with a 1000 ohms/volt ac voltmeter connected to the VOLTMETER test terminals.
4. Vary the TEST RHEOSTAT (TR) through its range. The minimum-to-maximum voltage read should cover slightly more than 6.5 volts. If this is not true, the TEST RHEOSTAT or LOADING RESISTOR (LR) is at fault.
5. Set the LDC CONTROL SWITCH (LDC-CS) on the OFF position.
6. Connect the voltmeter across terminals 10 and 11 (INPUT) of the printed circuit board terminal strip. The reading here will be in the vicinity of 58 volts when the VOLTAGE SETTING control value equals the 120-volts-applied voltage. THIS IS NOT A CALIBRATION LEVEL MEASUREMENT. If this is not true, the switch (VSC1), the rheostat (VSC2), the transformer (IPT) or Line Drop Compensation circuitry is probably at fault. Isolate problem by checking components individually.
7. With the fine VOLTAGE SETTING rheostat (VSC2) on zero (0), operate the coarse VOLTAGE SETTING switch (VSC1) from the 105-volt position through its steps to the 130-volt position. The voltmeter should drop about 2.5 volts for each step. If this is not true, either the switch (VSC1) or transformer (IPT) is probably at fault.
8. With the coarse VOLTAGE SETTING switch on the 120-volt position, vary the fine VOLTAGE SETTING rheostat from zero (0) to 5.0 volts. The measured voltage should drop smoothly about 2.50 volts. Failure to conform indicates a faulty rheostat (VSC2) or transformer (IPT).

A quick check of the DRAG-HAND RESET switch (DHR) and the NEUTRAL LIGHT (NL) may be made.

1. Connect the ac voltmeter from G to DHR on fanning strip TB2.
2. Push the DRAG-HAND RESET button and note approximately a 120-volt reading on the meter. If there is no indication, the switch is probably defective.
3. Connect a jumper from DHR to NL on fanning strip TB2.
4. Push the DRAG-HAND RESET button and the NEUTRAL indicator light should come ON. If the neutral indicator light does not come on, the lamp or lamp holder is defective.

Line-Drop Compensation Components

The line-drop compensation components should be checked with the printed circuit board disconnected, by dropping the fanning strip away from the printed circuit board terminal strip.

1. Switch the POWER switch to EXTERNAL.
2. Connect a jumper from the EXTERNAL SOURCE terminal to ground.
3. Apply and maintain a test current source of 0.2 amp from C1 to C3 on the fanning strip for terminal strip TB2.
4. Connect a 1000 ohms/volt ac voltmeter to the terminals marked INPUT on the fanning strip for the printed circuit board.
5. Switch the LDC control switch to (+X+R).
6. Set the coarse and fine REACTANCE controls (X1 and X2) to zero (0).
7. Vary the RESISTANCE control (R1) and read the voltage at the major points across the dial. The measured voltage at these points should be half the RESISTANCE control dial setting ±3.5%.

Erratic behavior indicates a defective RESISTANCE control. A serious deviation from expected readings at all levels indicates a defective R2. R2 is selected to yield a resistance of 270 ohms ±3.5% from terminal 1 to terminal 3 of the RESISTANCE control (R1).

8. Set the RESISTANCE control at 24 volts on the panel and switch the LDC control from the (+X+R) setting through the other two positions (−X+R and +X−R). The voltage reading should be constant. Any change indicates a probable defective LDC control switch.
9. Check the coarse REACTANCE control.
   A. Set the RESISTANCE control to zero (0).
   B. Switch the LDC control to (+X+R) and operate the coarse REACTANCE control through all positions.

The voltage reading in each switch position should be half the dial setting. This reading cannot be taken as precise, unless a current source, virtually free of high-order harmonics, is used. This is not normally available in a typical test set up. The unit is calibrated at the factory and any trouble should be indicated by a significant deviation from the values provided in this troubleshooting outline. In this case, a deviation indicates a defective REACTANCE switch (X1) or reactor (X3).

10. Set the coarse REACTANCE control at 10 volts. Rotate the fine REACTANCE control through all positions. The voltage reading at each position should be half the sum of 10 plus the respective fine REACTANCE control setting. A deviation indicates a defective fine REACTANCE switch (X2) or reactor (X3).
11. Set the coarse REACTANCE control at 10 volts, and the fine REACTANCE control at zero (0), and then switch the LDC CONTROL through (−X+R) and (+X−R). The reading should remain constant. A deviation indicates a defective LDC CONTROL switch.

If the results of all the previous line-drop compensation tests deviate significantly from the values provided in this outline, the LDC CONTROL switch or the auxiliary current transformer (ACT) are the most likely problem areas.

If all the above checks are satisfactory, the trouble is likely to be in the printed circuit board. Refer to the printed circuit board troubleshooting procedures which follow.

Printed Circuit Board

WARNING
Care must be exercised if the printed circuit board is to be removed or tested while the control is energized. Shock hazzard is present.

It is convenient to troubleshoot the printed circuit board circuitry while it is mounted in the control; however, the board can also be checked after it is removed from the control. The board should be serviced in a properly equipped service facility and not in the field. In this section use Figures 46 and 14 or 15 to assist in troubleshooting.

The use of in-circuit component testers should be avoided since their use can cause damage to the microcomputer (U1). All soldering and unsoldering must be done with an isolated soldering iron. Good anti-static procedures must be followed during component replacement.

Replacement of the microcomputer is to be avoided. Return the printed circuit board to an approved service facility for repair.

PRINTED CIRCUIT BOARD LEFT IN THE CONTROL

1. Set the LINE-DROP COMPENSATION control to OFF.
2. Set the POWER switch to EXTERNAL.
3. Set the VOLTAGE SETTING to 120 volts.
4. Set the BANDWIDTH to 2 volts.
5. Set the TIME-DELAY to 15 seconds.
6. Apply a 60/50-Hz, 120-volt ac nominal variable source to the EXTERNAL SOURCE terminals, making sure that the source ground is connected to the panel ground (white post).

PRINTED CIRCUIT BOARD REMOVED FROM THE CONTROL

1. Set the BANDWIDTH control two positions clockwise from its extreme counterclockwise position.
2. Set the TIME-DELAY control approximately 30 degrees clockwise from its extreme counterclockwise positions.
3. Connect a 120-volt ac supply to V_3 terminal (13) and G (ground) terminal (12). Observe ground.
4. Connect one end of a 390-ohm ± 2% resistor to either INPUT terminal (10 or 11) on the printed circuit board.
5. Connect the other end of the 390-ohm resistor and the other printed circuit board INPUT terminal to a variable isolated 60-volt ac, 60/50-Hz supply.

The input voltage and equivalent bandwidth on the printed circuit board are related to 60-volt ac and are, therefore, one-half the 120-volt ac level applied to the control.

CHECK NO. 1 - POWER SUPPLY AND REFERENCE

The following measurements can be made with a multimeter with an accuracy of 2%, having at least 5000 ohms/volt dc and 1000 ohms/volt ac. The input voltage will either be held in band or varied from band edge to band edge.

With the input voltage set at nominal (in band), the following power supply voltages should be obtained between TPO and the designated test points as shown in Table 9.

Table 9
Power Supply Voltages at Test Points

Test Point	Volts dc
TP1	+28 ± 15%
TP2	+5.1 ± 6%
TP3	+5.0 ± 3%
TP8	+7.5 ± 10%
TP9	−7.5 ± 10%

Failure to Conform #1

Condition	Probable Fault
TP1 Low	CR13, CR14, CR15, CR16, or C3
TP2 Off	R37, CR23, C17, or U1
TP3 Off	U3, or shorted input on U1
TP8 Off	R2, CR22, C5, or U4
TP9 Off	CR3, CR4, R1, C2, CR21, C4, or U4
TP 2 and TP8 Low	CR1, CR2, or C1
All Low	T1

If all power supply voltages are correct, each circuit generating an input to the microcomputer should be checked by taking the following steps:

CHECK NO. 2 - INPUT AND FILTERING

1. Connect the multimeter to test points TPO and TP4.
2. Measure 2.5 volts dc ± 5% at TP4.
3. Connect an ac coupled meter having a 200 millivolt range to test points TPO and TP4. The reading should be less than 100 millivolts.

Failure to Conform #2

Condition	Probable Fault
DC Voltage Off	Any components up to TP4 in the input section
AC Ripple High	CR5, R6, CR7, CR8, C10, or C8.

CHECK NO. 3 - DIFFERENTIAL AMPLIFIER

1. Connect the multimeter to test points TP0 to TP5.
2. Adjust the input supply until the reading at TP5 is 2.5 volts dc. The input should be 60 volts ac or 120 volts ac ±5%, depending upon the board being out of or in the control, respectively.
3. Switch the multimeter to ac and read less than 20 millivolts.
4. Switch back to dc.
5. Vary the input and read a 0.625-volt change at TP5 for each 2.0-volts ac change in the input related to the 120 volts ac input supply.

Failure to Conform #3

Condition	Probable Fault
Input supply out of tolerance for 2.5 volts ac at TP5 or ac ripple high	R17, R18 C13, or U4
Output swing to input swing Off	R13, R17, R18, R14, or U4

CHECK NO. 4 - LOW-VOLTAGE DETECTOR

1. Connect the multimeter to TP0 and TP13.
2. TP13 should read at least 5 volts dc.
3. Place a 1000-ohm, 20-watt resistor between TP0 and TP4.
4. TP13 should read less than 0 volts dc.

Failure to Conform #4

Condition	Probable Fault
TP13 too low at high level or TP13 too high at low level	U4, R28 or R29

CHECK NO. 5 - TIME DELAY

1. Connect the multimeter to TP0 and TP16 of R34 (time-delay potentiometer center terminal).
2. Set the control to 65 seconds or at 140 degrees clockwise from its most counterclockwise position.
3. Read 2.5 volts dc ± 4% with an input supply of 120 volts ac.

Failure to Conform #5

Condition	Probable Fault
TP16 Off	R22, R34 or R16

CHECK NO. 6 - MOTOR CURRENT SENSE

1. Apply 0.12 amp to the motor current sense terminals (1 and 2) of the printed circuit board to operate the circuit by the following procedure:
   A. With the board in the control, connect a 1000-ohm, 20-watt resistor momentarily from (HS) on the control to the rear panel fanning strip to ground (G) while 120-volts ac supply is applied at the external source terminals.
   B. With the board out of the control the same resistance can be used in series with a 120-volts ac supply applied to the motor current sense terminals of the board.
2. Connect the multimeter from TP12 to TP0. Read at least 1.5 volts dc with the current applied and less than 0.4 volt dc with the current off.

Failure to conform can involve any component in the motor current sense circuit.

CHECK NO. 7 - BANDWIDTH SETTING

If not fault is found in any of the previous circuits, the bandwidth switch should be checked.

1. Connect the dc voltmeter from TP0 to each of the terminals of the bandwidth switch.
2. Position, in which the switch is set, should read 0.
3. All others should read at least 2.0 volts.

CHECK NO. 8 - BAND EDGE INDICATORS, OUTPUT LOGIC, DRIVERS AND MOTOR RELAYS

With the board in the control, the counter can act as an indicator of a signal to the counter. With the board out of the control a 500-ohm resistor may be connected across the counter terminals of the printed circuit board.

1. Rotate the TIME-DELAY control to its most counterclockwise position.
2. Adjust the input supply to the in-band value of 120 volts ac (60 volts ac with the printed circuit board out of the control).
3. Place control switch on AUTOMATIC (board in control).
4. Provide the means for triggering the motor current sense as in check no. 6.
5. Connect the dc voltmeter from TP1 to TP14. TP1 will be used for all following measurements on the printed circuit board (TP1 positive to others).
6. Relays should be open and TP14 should read 0.0.
7. Drop the input supply to approximately 110 volts ac. (55 volts ac with the board out of the control). The low light DS1 should come on. KR should close after a delay (5 seconds) and TP 14 should read 20 to 30 volts dc.
8. Connect ac voltmeter at fanning strip TB2 (board in control) from G to R3 and read approximately 110 volts ac.
9. Connect the dc voltmeter to TP15. TP15 should read 0.
10. Raise the input voltage to approximately 127 volts ac (63.5 volts ac with the printed circuit board out of the control). The high light DS2 should come on. The KL relay should close after a brief delay and TP15 should read 20 to 30 volts dc.
11. Connect ac voltmeter at fanning strip TB2 (board in control) from G to L3 and read approximately 127 volts.
12. If testing printed circuit board outside of control, place continuity meter between motor source and

raise or lower terminals. Continuity should exist when relay closes.

13. Pulse the motor current sense circuit with the triggering circuit. The relay should open when current is applied and reclose after a brief delay when the current is removed.
14. Connect the dc voltmeter across the counter terminals.
15. Pulse the current sense circuit. The counter should count and the meter should raise to 20 to 30 volts and drop to 0.0.

Failure to Conform #8

Condition	Probable Fault
Band Light does not come on	U5, U1, R23, DS1, or DS2
Relay does not close and associated TP stays low	U5, U1, or U2
Relay does not close but associated TP goes high	KR, or KL
Relay closed continuously	U5, U1, or U2
Band light stays on when it should be off	U5, U1
Counter voltage stays high or low at all times	U5, U1, or U2
Wrong voltage at L_3 or R_3 after respective relay closes	KR or KL

CHECK NO. 9 - MICROCOMPUTER, OUTPUT LOGIC AND DRIVERS

To isolate a possible problem which could be either U5, U2 or U1, it is necessary to probe the input pins of U2 and U5. A sharp needle probe is required to pierce the coating on the pins. Use these terminals of U5 as test points with TP0 common. LOW for a line is less than 0.45 volt dc; HIGH is 2.4 volts dc minimum.

CHECK NO. 10 - U5 TERMINALS

1 goes high to activate DS1 (low band edge).
2 goes high to activate DS2 (high band edge).
3 goes low to close KR.
5 goes low to close KL.
7 is normally high and goes low when the current sense is activated.

If these points are OK, the trouble is in U5.

Failure of any of these indicates trouble in U2 or the microcomputer U1. Replace U2 as a trial. If the failure persists the trouble is in the microcomputer U1.

See Figure 46 for the parts list of the printed circuit board.

Other problems in the microprocessor can cause false responses or bandwidth errors.

No attempt should be made to further analyze these problems or to replace U1. Contact McGraw-Edison service for board exchange.

Printed Circuit Board Removal

The printed circuit board can be physically removed from the control and yet remain electrically connected for test purposes. To keep the printed circuit board electrically connected to the control, follow the numbered steps, but DO NOT disconnect the fanning terminal strip as described in Step No. 1.

1. Loosen the screws on the interconnecting terminal strip on the printed circuit board to drop the fanning strip clear.
2. Remove the counter quick disconnects.
3. Loosen the locking strips on the bandwidth knob and the time-delay knob and turn them until they clear the knobs.
4. Loosen the time-delay knob set screw and remove the knob.
5. Remove the bandwidth knob.
6. Remove the panel nuts from the bushings that are located under the knobs.
7. Loosen the two side screws that are engaged in slots at the bottom of the board frame to allow free movement of the printed circuit board.
8. Swing the top of the board away from the front panel until the control shafts are clear. Lift the board free of the slots in the side brackets (Figure 71).

The replacement of the printed circuit board is accomplished by following the above steps in the reverse order. To correctly orient the bandwidth knob, observe the flattened shaft and corresponding knob cavity.

To properly orient the time-delay knob, observe the following:

1. Rotate the shaft to the extreme counterclockwise position.
2. Replace and align the knob index with the unscaled mark on the panel.
3. Tighten the set screw.
4. Check and readjust if required, because this alignment is critical.

By leaving the fanning strip attached to the printed circuit board with the printed circuit board removed from the control, it is possible to thoroughly test the entire control assembly. The fanning strip concept provides reliable screw-down-type terminals for rapid removal and replacement.

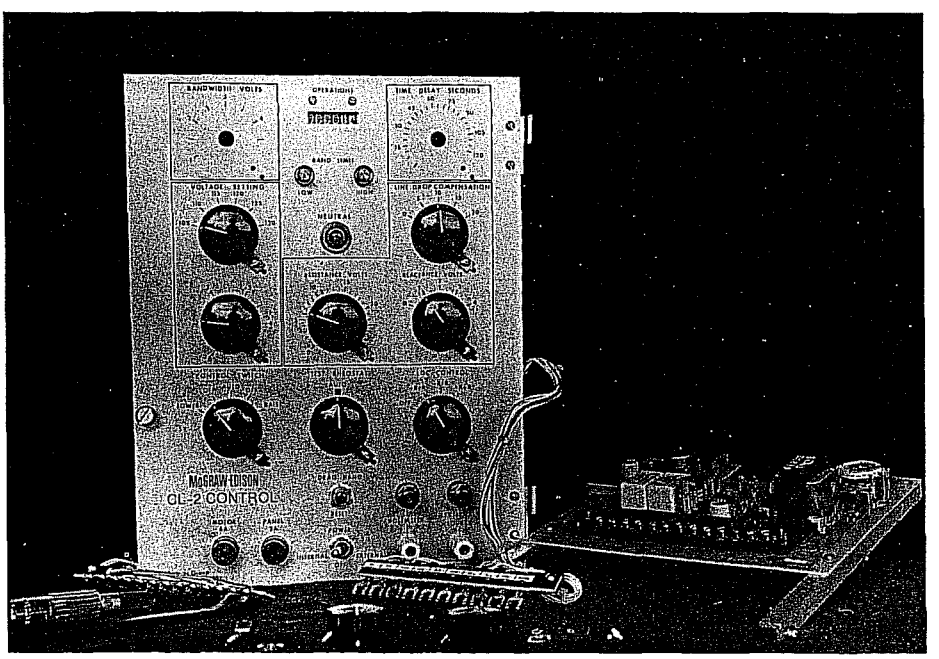

Figure 71.
Printed circuit board removed.

ACCESSORIES

The following accessories are available for use with the regulator control to perform various functions. They can be mounted in the same enclosure as the control; however, if a number of them are used, a second enclosure is required. Most can be either installed at the factory or retrofit in the field by the customer. Those that can be retrofit are listed in the spare parts section.

Ampere-Demand Meters

The ampere-demand meters, shown in Figures 72 (socket-type) and 73 (panel-type), facilitate system regulation by identifying overloaded circuits and showing feeder and phase loading balance. They accurately meter regulator loads from which feeder loads can be determined. Their best application is in an unmetered substation or on any supplementary line which does not have metering information available. The panel-type ammeter will read both instantaneous and thermal demand values.

The ampere-demand meters are thermally actuated, taking 5 minutes to record 90% of the change in the load, while continuously averaging the load. Transient variations are not reflected in the indication of the meter. A drag hand is provided to show the maximum value the meter reaches. A dual full-scale rating of either 4/8 amperes on the socket-type or 2.5/5 amperes on the panel-type ampere-demand meter is provided. The meter element operates from the secondary of a self-contained current transformer that is fed from the current transformer (toroid coil) inside the regulator tank on the load (L) bushing. The multiplier used to find the actual load current is obtained from the ratios of these current transformers. A supplemental auxiliary current transformer is not required to operate either meter with a McGraw-Edison VR-32 regulator. An ammeter socket is required to install the socket ammeter. This socket may be provided by the factory or field installed after manufacture. For full details refer to *S225-10-1 Supplement 1.*

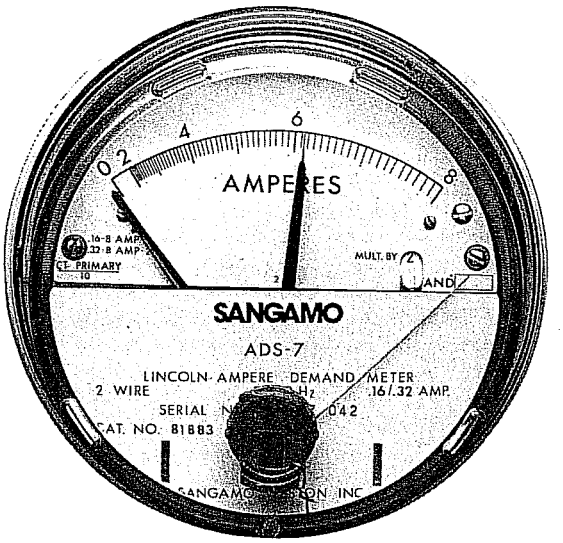

Figure 72.
Socket-type ampere-demand meter.

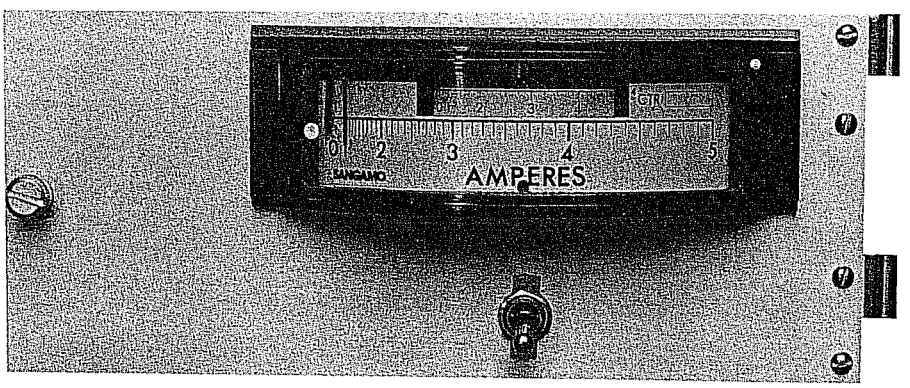

Figure 73.
Panel-type ampere-demand meter.

Heater Assembly

The thermostatically controlled heater assembly is best used in high-humidity areas. The heater assembly shown in Figure 74 is located in the lower-left corner of the rear panel.

The heater can be manually turned on or off by means of the toggle switch located on the heater assembly. In the ON position, the thermostat in the heater assembly will turn the heater on when the temperature falls below 85°F. The thermostat turns the heater off when the temperature exceeds 100°F. For full details refer to *S225-10-1 Supplement 2.*

Voltage-Reduction Control

The voltage-reduction control accessory (Figure 75) can provide system load management through its ability to trigger the regulator to reduce voltage. Its application is ideal in situations where power demands surpass available capacity and where there are extraordinary peak loads.

The voltage reduction control provides three reduction levels: 2½%, 5%, and 7½% of regulated voltage level. Any one of these three levels can be manually selected by turning the single control on the panel to the desired percent reduction. The reduction steps are provided by an autotransformer.

Through the use of plug-in relays and appropriate percentage connections to the rear terminal strip, any of these three reduction levels can be selected via remote activation signal. Many standard relay coil voltage selections -ac or dc - are available to match the relay-to the remote control system. For full details refer to *S225-10-1 Supplement 3.*

Voltage Limiter

The voltage-limiter accessory (Figure 76) permits a regulator's maximum and minimum output to be selected, protecting the consumer from abnormally high or low voltages resulting from:

1. Defective functioning of the regulator control panel.
2. Abnormal loading of the feeder.
3. Inaccurate regulator control settings (voltage level, bandwidth, line-drop compensation, etc).
4. Heavy loading by the first customer while there is a leading power factor on the feeder.
5. Light loading at the first customer with heavy loading on the feeder at the same time.

The lower-limit control can be disabled without influencing the upper-limit control. Turning the upper-limit control off, however, disables both controls. With both controls turned off, power may be applied to the voltage limiter's external test terminals for operational checks. The range of the lower-limit setting is 105 to 120 volts; the range of the upper-limit setting is 120 to 135 volts.

The raise or lower motor circuit of the regulator is interrupted when a set voltage limit is exceeded. This interruption provides total override of the main control. For full details refer to *S225-10-1 Supplement 4.*

Figure 74.
Heater.

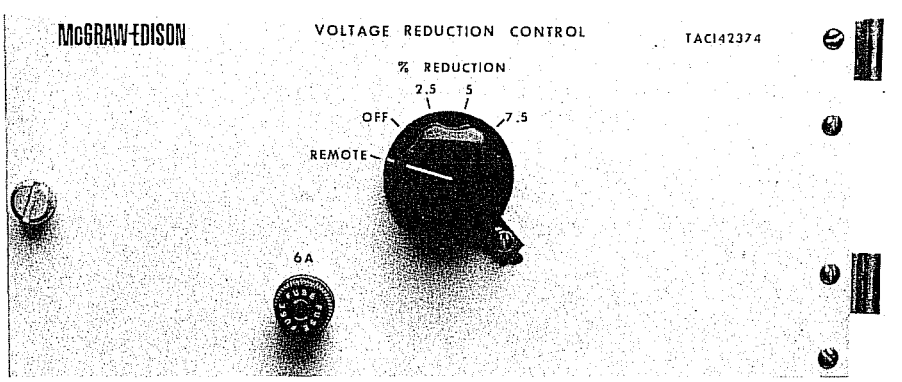

Figure 75.
Voltage reduction control.

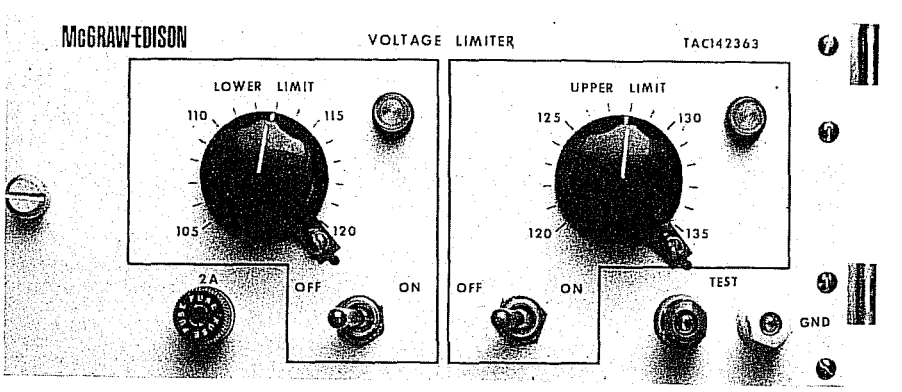

Figure 76.
Voltage limiter.

Auxiliary Current Transformer

The auxiliary current transformer (Figure 77) steps up the 0.2-ampere control current supply to a usable 2.5-ampere or 5.0-ampere source for special metering purposes. The two jumpers on the terminal strip on the rear of the accessory panel determine the current available from the auxiliary current transformer.

The auxiliary current transformer has an accuracy of ± 1% with a 25-VA burden at a 70% power factor. The secondary of the transformer must be short circuited - using the short-circuiting block provided - when a metering device is not connected to the secondary. For full details refer to S225-10-1 Supplement 5.

Voltmeter

The panel voltmeter (Figure 78) indicates the present instantaneous RMS voltage level of the regulator output (regulated voltage). The scale is 0 to 150 volts. The actual output voltage of the regulator, at the load bushing, may be determined by multiplying the voltmeter reading by the overall potential transformer ratio of the regulator. The PT ratio is found on the regulator nameplate. It is also listed for typical voltages in column 7 of Table 4 on page 8. This panel voltmeter is mounted similar to the panel-type ampere-demand meter (Figure 73) for installation inside the control cabinet. For details refer to *S225-10-1 Supplement 6.*

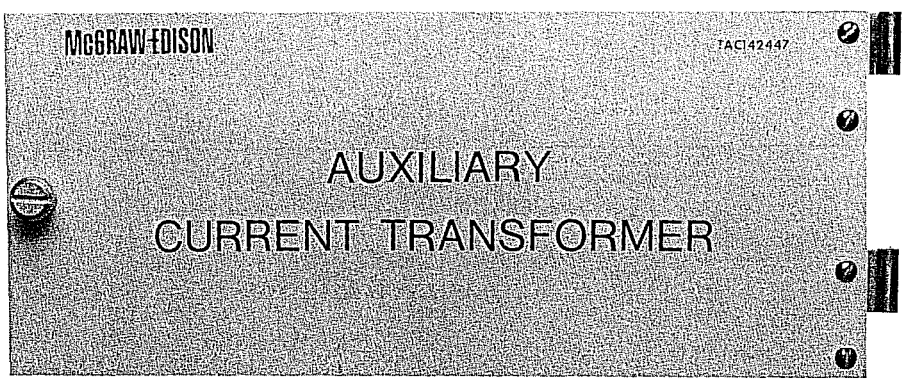

Figure 77.
Auxiliary current transformer.

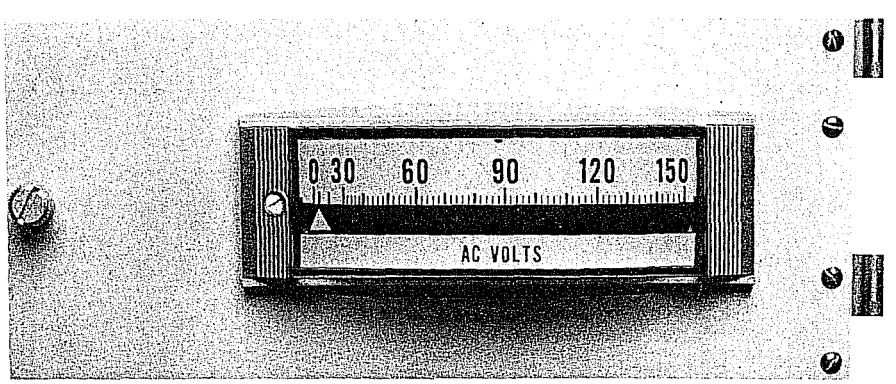

Figure 78.
Voltmeter.

Reverse Power-Flow Detector (RPF)

Most voltage regulators are installed in circuits with well-defined power flow from source to load. However, some circuits have interconnections or loops in which the direction of power flow through the regulator may change, requiring a reverse power-flow detector (Figure 79). For optimum operating performance, such a regulator should be equipped with a reverse power-flow detector to allow the regulator to sense and control voltage regardless of power-flow direction.

For proper operation in the reverse direction, a regulator equipped with a reverse power-flow detector must

1. Reverse the direction of the tap-changer motor.
2. Connect the voltage control to a source-side sensing voltage.
3. Reverse the apparent polarity of the line-drop compensator.

The SENSITIVITY control calibrated in % of CT primary rating sets the threshold for detection of power reversal. It is adjustable from 1 to 9%, sensing only the in-phase (real) component of current, and eliminating possible hunting resulting from reactive currents induced by line circuitry.

To operate to its full capabilities, a source-side PT voltage source must be available to the RPF detector. Without this source the RPF detector will sense a reverse power flow and will override the control, preventing any tap changes when current is flowing in the reverse direction. With a source-side sensing voltage (which may be provided by an externally mounted PT), the regulator will operate as programmed in the reverse direction, just as it does with forward (normal) power flow.

Because the RPF detector panel is larger than the other accessory panels, it requires the use of either a longer control cabinet or an auxiliary cabinet. For customers who contemplate adding reverse power flow detection at a later date, it is suggested that RPF provisions be ordered with the new regulator. This would provide a source-side sensing voltage, a larger control cabinet, and a modified control backpanel. For full details refer to *S225-10-1 Supplement 7.*

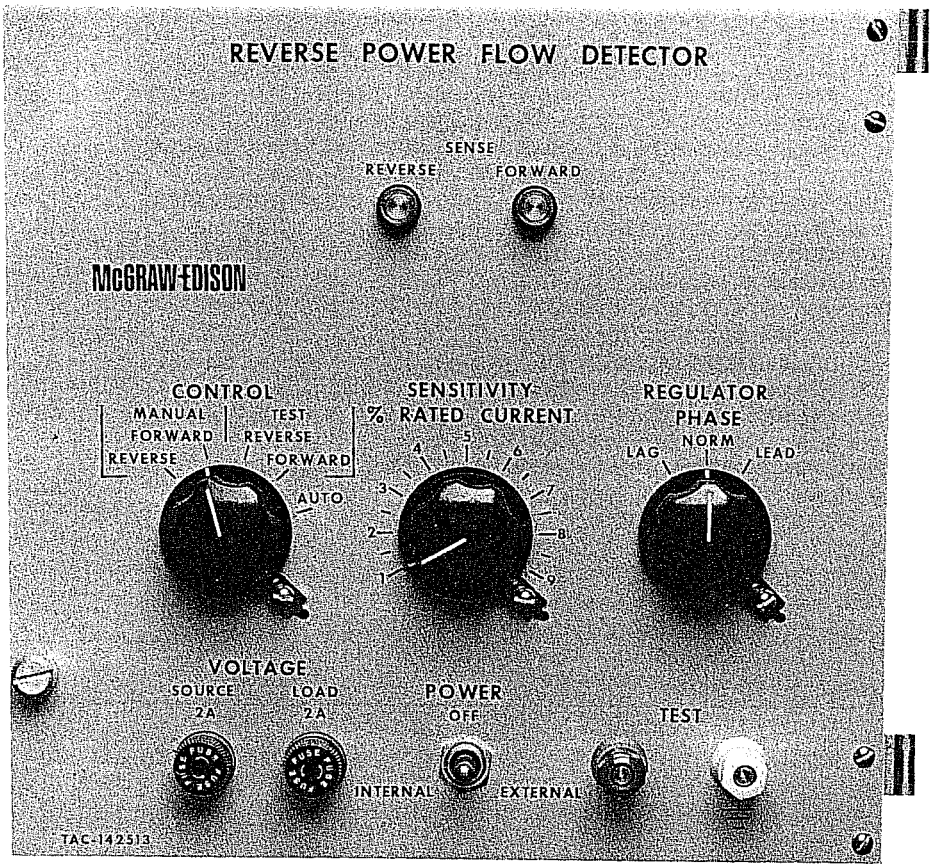

Figure 79.
Reverse power-flow detector.

Fan Cooling Accessory

Voltage regulators 250 kVA and larger can be equipped with fan cooling (Figure 80). Fan cooling increases the load capacity of the regulator by 25%. Special requirements are necessary on regulators using fan cooling, therefore the regulator must be ordered with fan cooling or with provisions for adding fan cooling. Mounting cooling fans flush to the plate-type radiator is accomplished by using T-bolts that secure the cooling fan to the bank of radiators.

The automatic operation of the fan is controlled by a thermometer having a thermal switch that will cycle the fan on or off when the top-oil temperature reaches predetermined temperature limits. This temperature-sensitive thermal switch has an upper limit adjustable from 80°C to 110°C. The differential from make to break is 6°C to 10°C. The thermal switch, when temperature activated or deactivated, signals a relay which turns the fan on or off. For full details, refer to *S225-10-1 Supplement 8.*

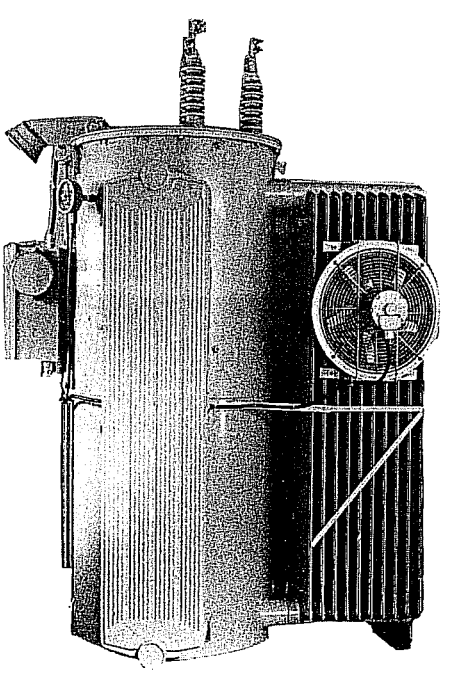

Figure 80.
Fan cooling accessory.

Remote Mounting Control Cable

For remote mounting of the control cabinet, various length cables are available. See the *Spare Parts* section.

CR Relay and Terminal Block

For SCADA operation, a CR relay and terminal block are required.

RETROFITTING A CL-2 CONTROL TO PREVIOUS REGULATOR DESIGNS

Most McGraw-Edison VR-32 voltage regulators produced since 1957 can be upgraded to work with the CL-2 control. This does not include simplified regulators (SR-32 or Auto-Boosters®). This does include the line material control (1957-63) in the RS13Y series, the Kyle control (1963-69) in the RS83Y series, the Canonsburg control (1969-77) in the TAB142045 or B843449 series and the CL-1 control (1977-82).

Earlier pole-star types, built in Canonsburg, cannot be retrofitted using these instructions. The following applies to pre-CL-1 design regulators:

A complete CL-2 control (part code #1060) must be retrofit to the older regulator. This includes the cabinet, back panel and front panel. The original control cable should be reused where possible to simplify rewiring. If this is impossible, the factory should be contacted for additional instructions. Note that all control accessories, except reverse power flow, can be utilized with the retrofit CL-2, providing increased versatility of the regulator.

1. Count the number of wires in the existing control cable to determine which wiring schematic applies to your regulator. All VR-32 regulators produced in this period had either 8, 9, or 10 conductors in the control cable.
2. Determine if the regulator is to be used at rated voltage, or at a lower tapped voltage. This can be found by referring to Table 4 on page 8. Using the regulator voltage rating, found on the nameplate, find the voltage rating in column 1 of Table 4. Then determine the nominal single-phase voltage at which the regulator will be used. Typical system voltages are found in column 2. If the exact system voltage is not listed, find the closest one. Then determine what internal tap is listed in column 3 for that system voltage.
   A. If it is "E1/P1" then our standard, current design CL-2 control will work. Order standard part code #1060 and install as indicated.
   B. If it is either "E2/P2 or E3/P3" then a modified CL-2 must be used. This modification includes a special ratio correction transformer on the back panel. Order CL-2 control part code #1079.
3. Note that the tap changer terminal board (TCB) wiring is shown, but no modifications are required here. The disconnect plug in the existing control cable will still be operative. The 10-conductor cable schematic required that one voltage lead, the white/black wire from V_2, be cut and insulated. It could also be disconnected at V_2 terminal on TCB located on the tap changer.
4. Tighten the waterproof lock-nut on cabinet top to the cable and cabinet.
5. Perform the operational check as described on page 4 to insure correct operation.

The following applies to CL-1 design regulators only:

1. Unless there is a need to replace the back panel or cabinet due to physical damage, the upgrade to CL-2 can be accomplished by replacing the front panel (part code #1061) only. This is done following the instructions for CL-2 front panel removal and replacement found on page 14. Note that there are two (2) voltage and CT disconnect switches on some CL-1 controls rather than one (1). All switches must be operated as instructed to disconnect the voltage and short the CT if the regulator is energized at time of panel replacement. Note and follow the instructions located on the decal on existing CL-1 back panels for proper operation of the switches.
2. Perform the operational check as described on page 4 to insure correct operation.

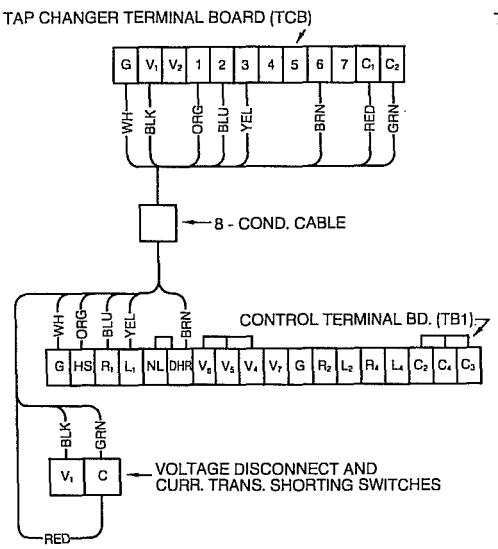

Figure 81.
8 - Conductor cable.

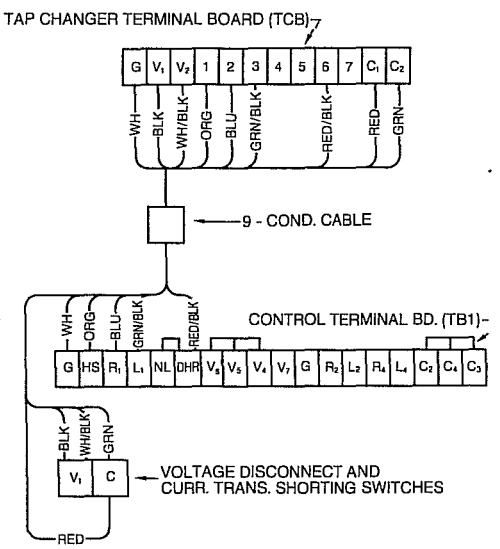

Figure 82.
9 - Conductor cable.

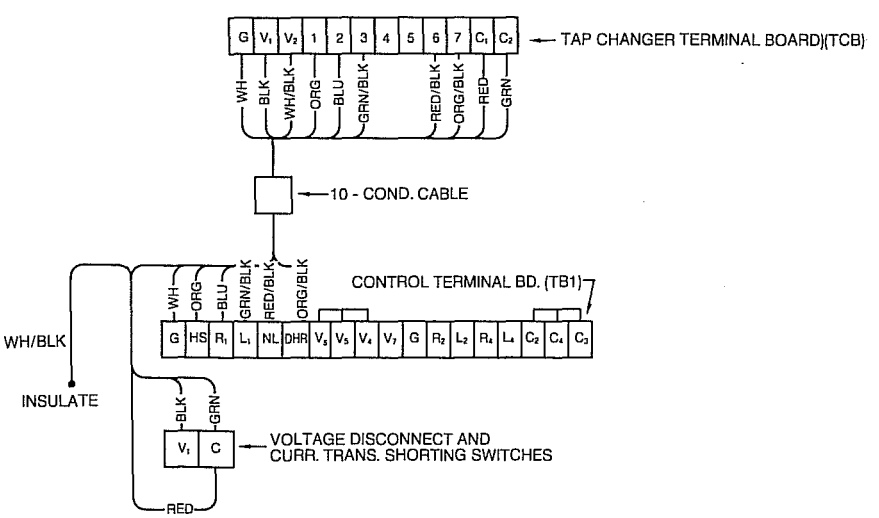

Figure 83.
10 - Conductor cable.

SPARE PARTS

When ordering replacement parts or field-installable accessories for your McGraw Edison VR-32 step-voltage regulator, provide the following information:

1. Regulator serial number (found on control nameplate).
2. Quantity of each part required.
3. Part code number of each part (as shown in Table 10).
4. Description of each part (as shown in Table 10).

Additional parts and installation information for tap changers is found in section *S225-10-2* on tap changers.

Table 10
Spare Parts

Description	Part Code No.	Reference Figure
• Bypass series arrester (with mounting hardware)	1001	Figure 2.
• Complete bushing assembly (indicate if for S, L, or SL application)		
Dry-type (95 kV BIL and below)	1002	Figure 84.
Oil-filled (150 kV BIL and above) (Note: oil-filled bushings available only as complete assembly.)	1003	
• Dry-type bushing components		
Terminal cap	1004	Figure 84.
Terminal cap gasket	1005	Figure 84.
Porcelain	1006	Figure 84.
Bushing/tank gasket	1007	Figure 84.
Clamp w/bolts	1008	Figure 84.
Clamp spring	1009	Figure 84.
• Terminal covers (bird guards)	1010	Figure 85.
• Position indicator (complete)	1021	Figure 5.
• Position indicator glass cover	1022	Figure 5.
• Position indicator external drive cable (not used on regulators without junction box)	1030	(not shown)
• Position indicator internal drive cable (provide total length of old cable in inches)	1031	(not shown)
• 928D and 170C Spring-drive tap changer parts		
Replacement motor kit A * (with sprocket and pin)	2001	Figure 86.
Main movable contact right hand * *	2002	Figure 86.
Main movable contact left hand * *	2003	Figure 86.
Main stationary contact	2004	Figure 86.
Reversing stationary contact right hand * *	2005	Figure 86.
Reversing stationary contact left hand * *	2006	Figure 86.
Reversing movable contact — 928D	2007	Figure 86.
Reversing movable contact — 170C	2050	Figure 86.
• 770B Direct-drive tap changer parts		
Replacement motor kit A (use old shield)	2101	Figure 88.
Replacement motor shield	2102	Figure 87.
Main or reversing movable contact	2103	Figure 87.
Main stationary contact	2104	Figure 87.
Reversing stationary contact	2105	Figure 87.
Reversing stationary neutral contact (non-arcing)	2106	Figure 87.
• 660C Direct-drive tap changer parts		
Replacement motor kit A *	2101	Figure 88.
Main movable contact	2202	Figure 88.
Main stationary contact	2203	Figure 88.
Reversing stationary contact	2204	Figure 88.
Reversing stationary neutral contact (non-arcing)	2205	Figure 88.
Reversing movable contact	2206	Figure 88.

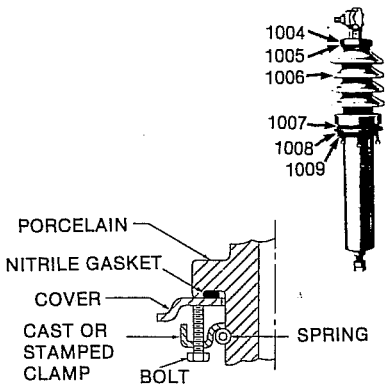

Figure 84.
High-voltage bushing and cut-away drawing.

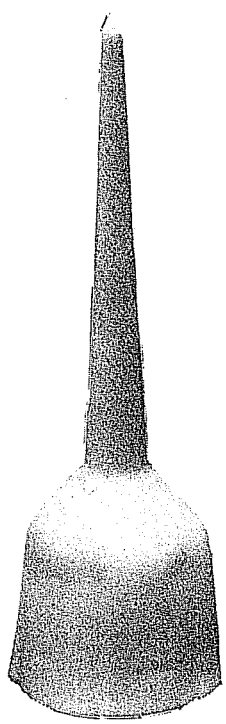

Figure 85.
Birdguard.

Description	Part Code No.	Reference Figure
• CL control parts		
Complete CL-2 control (includes 1061, back signal panel, cabinet, no cable)	1060	Figure 18.
CL-2 front panel only (includes all operational electronics of control)	1061	Figure 13.
CL-2 printed circuit board	1062	Figure 71.
Neutral light bulb and lens	1063	Figure 13.
Motor fuse (6A) (pack 5)	1064	Figure 13.
Panel fuse (2A) (pack 5)	1065	Figure 13.
Control knob with set screw (for time delay)	1066	Figure 13.
Control knob - push on (for all other applications)	1067	Figure 13.
CR relay and terminal strip	1068	(not shown)
• Control cable***		
Standard length for tank mounted control	1090	Figure 12
15' for remote mounting	1091	(not shown)
20' for remote mounting	1092	(not shown)
25' for remote mounting	1093	(not shown)
30' for remote mounting	1094	(not shown)
35' for remote mounting	1095	(not shown)
• Field-installable accessories See pages 55-58 for further information.		
Socket ampere demand-meter	1101	Figure 72.
Socket ampere demand-meter mounting base (with installation hardware and cover)	1102	Figure 72.
Panel ampere demand meter with instantaneous reading	1110	Figure 73.
Control cabinet heater	1201	Figure 74.
Voltage Reduction Control panel	1301	Figure 75.
Voltage limiter panel	1401	Figure 76.
Auxilary current transformer	1501	Figure 77.
Panel voltmeter (instantaneous reading)	1605	Figure 78.
Reverse Power Flow Detector panel****	1701	Figure 79.
Fan cooling	1801	Figure 80.
Auxilary control cabinet and hardware (required for RPF panel or when using more than one panel accessory with standard control box)	1080	(not shown)
Long control cabinet and hardware	1081	(not shown)

*Motor Kits include motor, capacitor and hardware.
**When contact viewed from motor-side of tap changer.
***Current design has 10 conductors. 8, 9 or 12 conductor cables with required terminations are available for obsolete designs or to mount CL-2 on previous regulator designs. Contact factory service department for details.
****Requires source side voltage only available through internal or external potential transformer on most regulators.

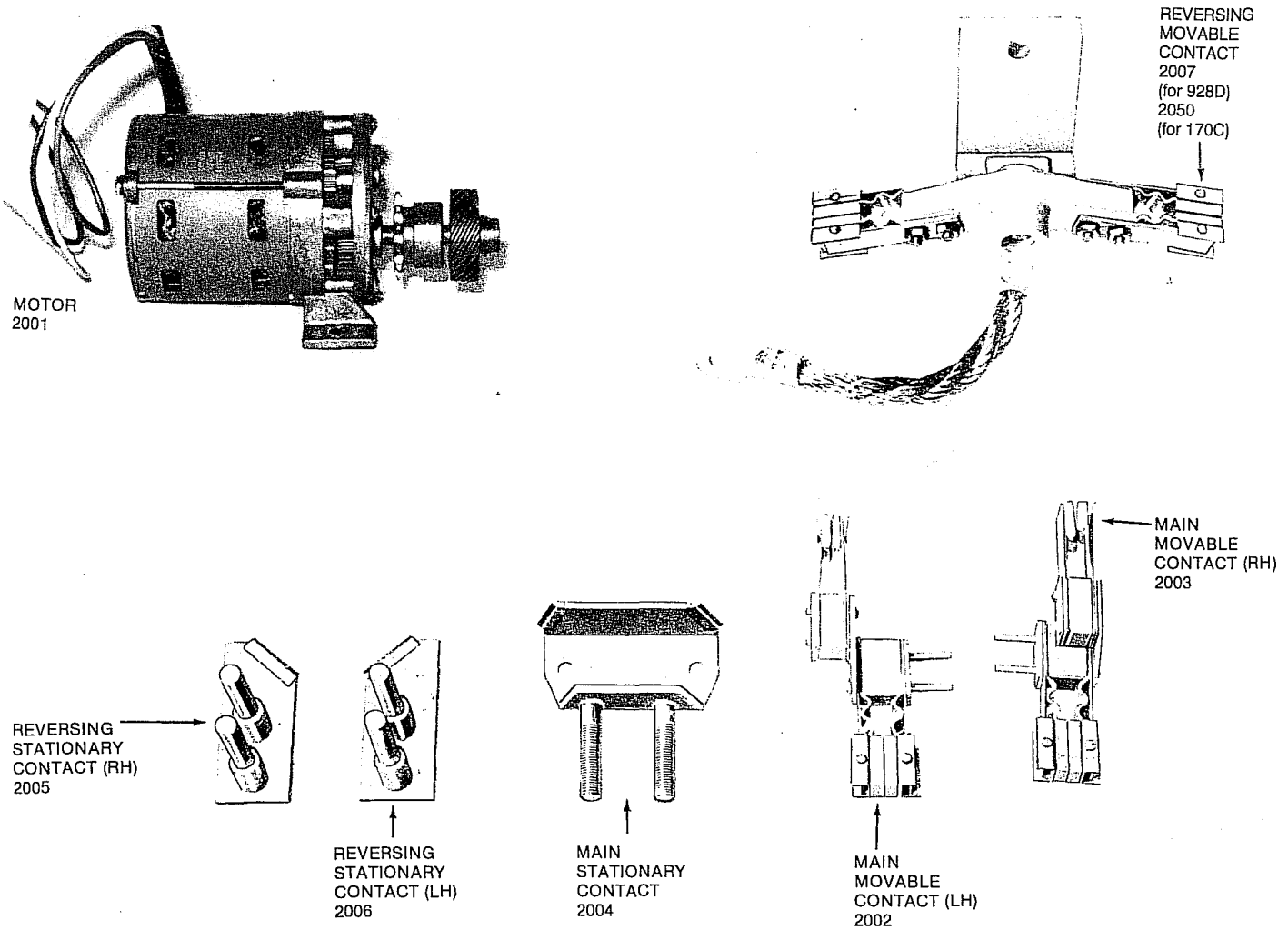

Figure 86.
Replacement parts for spring-drive tap changers (928D and 170C).

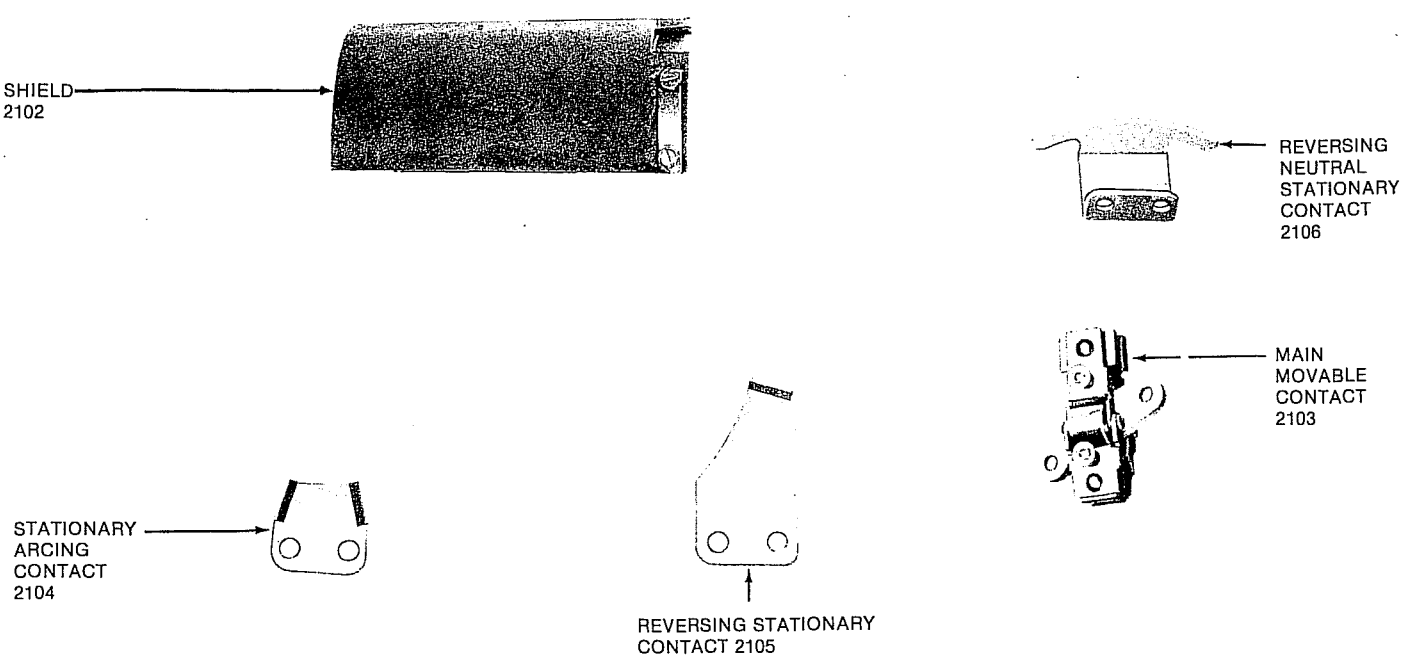

Figure 87.
Replacement parts for direct-drive tap changer (770B).

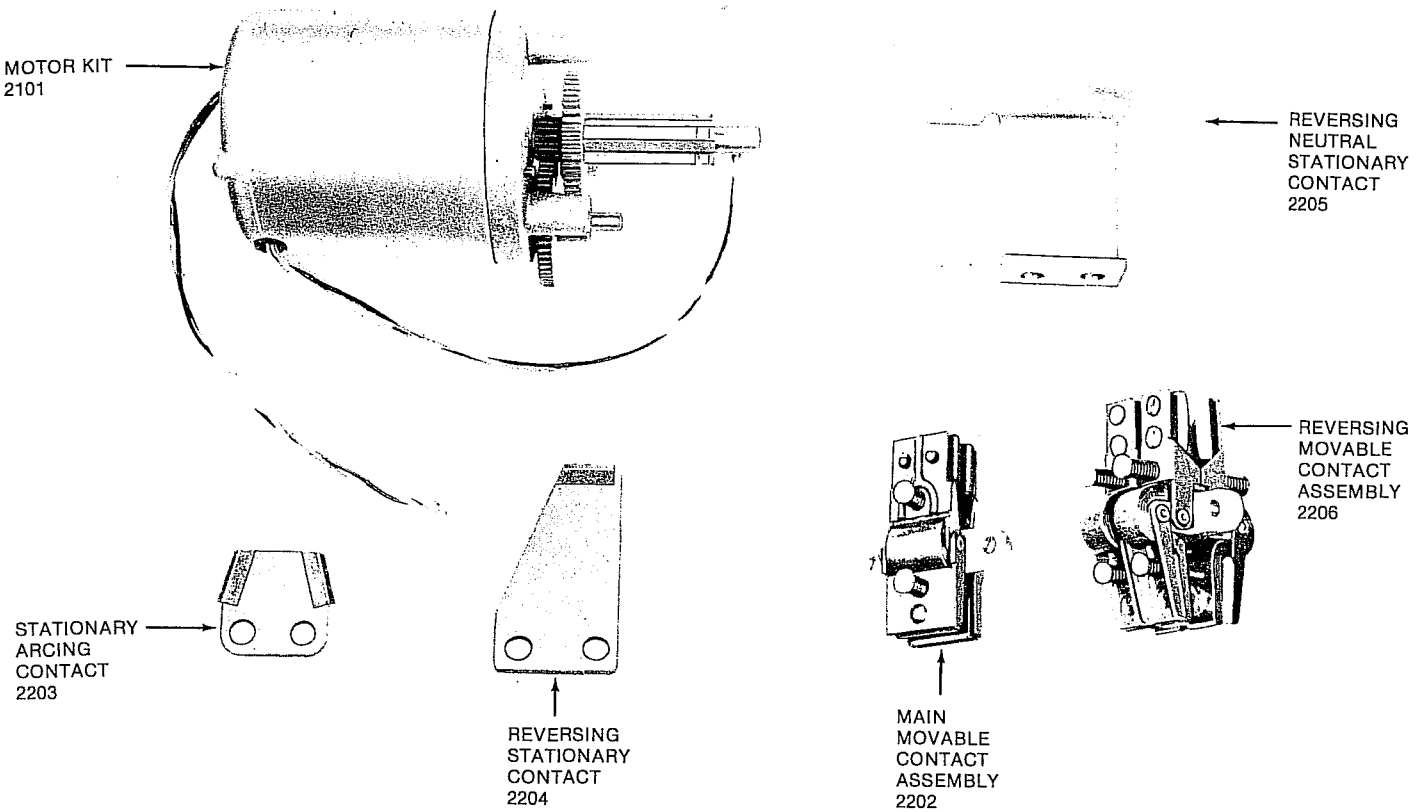

Figure 88.
Replacement parts for direct-drive tap changer (660C0.

Voltage Regulators

COOPER Power Systems

McGraw-Edison® VR-32 Regulator and CL-5 Series Control Installation, Operation and Maintenance Instructions and Parts Replacement Information

Service Information

S225-10-10

Contents

General 1
Safety 2
Receiving, Installation and Maintenance 1-1
Control Basics 2-1
Control Function Codes 3-1
Control Advanced Features 4-1
Tap Changer 5-1
Troubleshooting Guide 6-1
Accessories 7-1
Spare Parts 8-1
Index 9-1

General

McGraw-Edison® VR-32 voltage regulators are regulating auto-transformers. They regulate rated voltage from 10% raise (boost) to 10% lower (buck) in 32 approximately 5/8 percent steps.

McGraw-Edison regulators are supplied with the following standard features:

- Dual-rated 55/65°C rise
- ADD-AMP™ capability
- Unit construction
- Sealed-tank construction
- Pressure relief device
- 17” minimum creep bushings with clamp-type connectors
- MOV-type external series arrester
- Shunt arrester mounting bosses
- Two laser-etched nameplates
- Oil sight gauge
- Upper filter press connection
- Drain valve and oil-sampling device
- CE mark compliant control
- Control cable quick disconnect

The 65°C rise insulation system and the sealed-tank construction allow for a bonus capacity 12% above the 55°C nominal rating without loss of normal insulation life. The bonus capacity is stated on the nameplate (such as 167/187 kVA for a nominal 167 kVA regulator). All McGraw-Edison regulators are manufactured and tested to ANSI standard C57.15.

Unit construction, which suspends the internal assembly from the cover, allows for ease of inspection and maintenance.

There are three types of step-voltage regulators: source-side series winding (Type B), load-side series winding (Type A), and series transformer. McGraw-Edison regulators are usually equipped with an equalizer winding. The nameplates located on the tank and control box define the power circuit.

Figure 1.
VR-32 Voltage Regulator with CL-5 Series Control

These instructions do not claim to cover all details or variations in the equipment, procedure, or process described, nor to provide directions for meeting every possible contingency during installation, operation or maintenance. When additional information is desired to satisfy a problem not covered sufficiently for the user’s purpose, please contact your Cooper Power Systems representative.

October 2001 • Supersedes 12/00 • © 2001 Cooper Power Systems, Inc.
Printed in U.S.A.

SAFETY FOR LIFE

Cooper Power Systems products meet or exceed all applicable industry standards relating to product safety. We actively promote safe practices in the use and maintenance of our products through our service literature, instructional training programs, and the continuous efforts of all Cooper Power Systems employees involved in product design, manufacture, marketing, and service.

We strongly urge that you always follow all locally approved safety procedures and safety instructions when working around high voltage lines and equipment and support our “Safety For Life” mission.

SAFETY INFORMATION

The instructions in this manual are not intended as a substitute for proper training or adequate experience in the safe operation of the equipment described. Only competent technicians who are familiar with this equipment should install, operate, and service it.

A competent technician has these qualifications:

- *Is thoroughly familiar with these instructions.*
- *Is trained in industry-accepted high-and low-voltage safe operating practices and procedures.*
- *Is trained and authorized to energize, de-energize, clear, and ground power distribution equipment.*
- *Is trained in the care and use of protective equipment such as flash clothing, safety glasses, face shield, hard hat, rubber gloves, hotstick, etc.*

Following is important safety information. For safe installation and operation of this equipment, be sure to read and understand all cautions and warnings.

Hazard Statement Definitions

This manual may contain these four types of hazard statements:

DANGER: Indicates an imminently hazardous situation which, if not avoided, will result in death or serious injury.

WARNING: Indicates a potentially hazardous situation which, if not avoided, could result in death or serious injury.

CAUTION: Indicates a potentially hazardous situation which, if not avoided, may result in minor or moderate injury.

CAUTION: Indicates a potentially hazardous situation which, if not avoided, may result in equipment damage only.

Safety Instructions

Following are general caution and warning statements that apply to this equipment. Additional statements, related to specific tasks and procedures, are located throughout the manual.

DANGER: Hazardous voltage. Contact with hazardous voltage will cause death or severe personal injury. Follow all locally approved safety procedures when working around high voltage lines and equipment.

WARNING: Before installing, operating, maintaining, or testing this equipment, carefully read and understand the contents of this manual. Improper operation, handling or maintenance can result in death, severe personal injury, and equipment damage.

WARNING: This equipment is not intended to protect human life. Follow all locally approved procedures and safety practices when installing or operating this equipment. Failure to comply may result in death, severe personal injury and equipment damage.

WARNING: Power distribution equipment must be selected for the intended application. It must be installed and serviced by competent personnel who have been trained and understand proper safety procedures. These instructions are written for such personnel and are not a substitute for adequate training and experience in safety procedures. Failure to properly select, install or maintain this equipment can result in death, severe personal injury, and equipment damage.

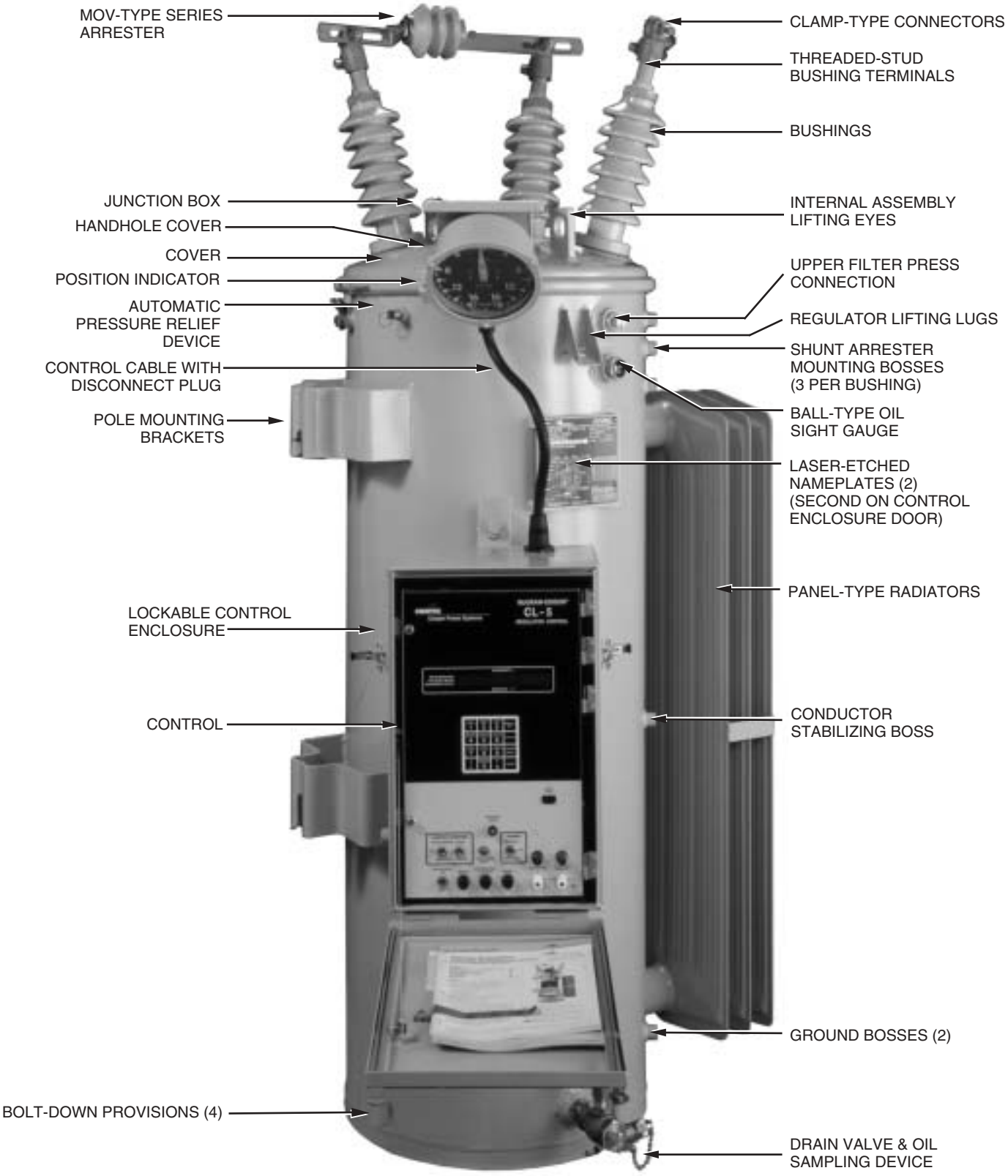

Figure 2.
External Features of the VR-32 Voltage Regulator

Receiving, Installation and Maintenance

Receiving

Inspection

Prior to shipment, the regulator is thoroughly tested and inspected at the factory. Immediately upon receipt of the regulator shipment, before unloading, a thorough inspection should be made for damage, evidence of rough handling or shortages. The position indicator, junction box, arrester, radiators and bushings should all be inspected for evidence of damage. Should this initial inspection reveal evidence of rough handling, damage, or shortages, it should be noted on the bill of lading and a claim should immediately be made with the carrier. Also, notify Cooper Power Systems, 2300 Badger Drive, Waukesha, Wisconsin 53188, attention Service Manager.

Unloading

When an overhead crane is used for unloading, the regulator must be lifted by means of a sling and **spreader bar** utilizing the tank-mounted lifting lugs which are shown in Figure 2. **Do not lift the entire unit with the lifting eyes on the cover.** The lifting eyes are only to be used to untank the internal assembly which is attached to the cover.

WARNING: The cover may fracture if the cover-mounted lifting eyes are used to lift the entire unit. Lift the entire unit only with tank-mounted lifting lugs.

Storing

If the regulator is not to be placed into immediate use, it can be stored with minimal precautions. Store the unit where the possibility of mechanical damage is minimized.

Installation

Pre-Installation Inspection

Before connecting the regulator to the line, make the following inspection:

1. Check oil sight gauge. Look for visible signs of oil leakage.
2. Examine series arrester for damage. If damaged, install a new arrester of same voltage rating.
3. Inspect porcelain bushings for damage or leaking seals. If there is a suspicion that moisture has entered unit, remove handhole cover and inspect for evidence of moisture such as rust or water tracks in oil. If moisture has entered that tank, dry regulator and filter oil before putting unit in service. See Table 1-5, page 1-12, for values that oil should meet. Be sure to properly replace handhole cover.

CAUTION: Do not subject tap changer to temperatures above 150°F (66°C). To do so may cause damage to the contact panels, resulting in misalignment of the contacts.

4. Check position indicator for damage. When cleaning the faceplate, do NOT use solvent or fuel.
5. If regulator has been stored for some time, test dielectric strength of oil according to Table 1-5, page 1-12.
6. Regulator may be energized at rated voltage (with caution) and an operational check (see page 1-10) can be performed. (This procedure is optional.)
7. A high-potential test may be done to ensure adequate electrical clearances to ground. (This procedure is optional.)

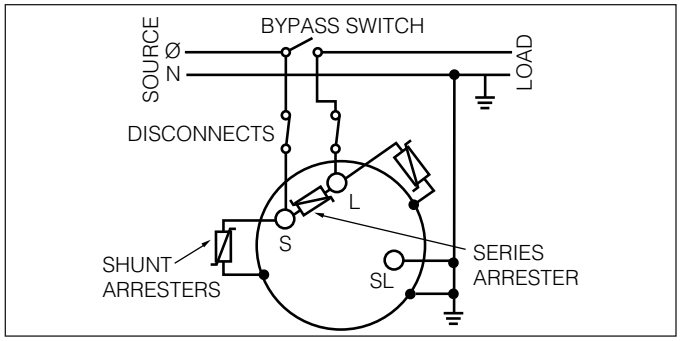

Figure 1-1.
Regulating a single-phase circuit

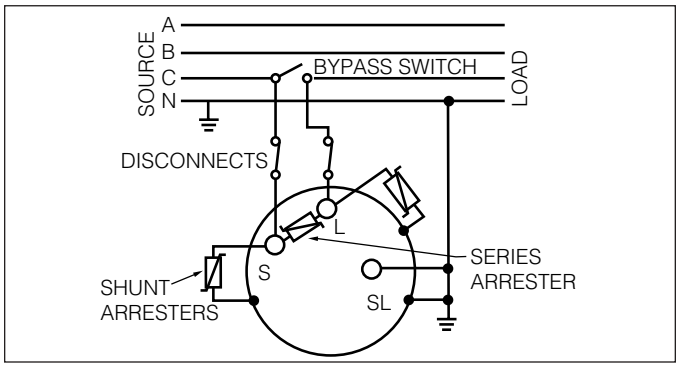

Figure 1-2.
Regulating one phase of a three-phase, four-wire circuit

WARNING: Connect the "S" bushing to the source, the "L" bushing to the load, and the "SL" bushing to neutral. To do otherwise may cause excessively high or low voltage on the load side of the regulator or cause severe damage to the regulator.

Systems Connections

A regulator can regulate a single-phase circuit, or one phase of a three-phase wye (star) or delta circuit. Two regulators connected phase-to-phase in open-delta, or three regulators connected phase-to-phase in closed-delta, can regulate a three-phase, three-wire circuit. When connected in wye, three regulators can regulate a three-phase, four-wire multi-grounded wye circuit. Three regulators should not be connected directly in wye on three-phase, three-wire circuits because of the probability of neutral shift, unless the neutral is connected to the neutral of a wye-connected bank of distribution transformers or to the substation transformer secondary neutral. Typical connection diagrams are illustrated in Figures 1-1 through 1-5.

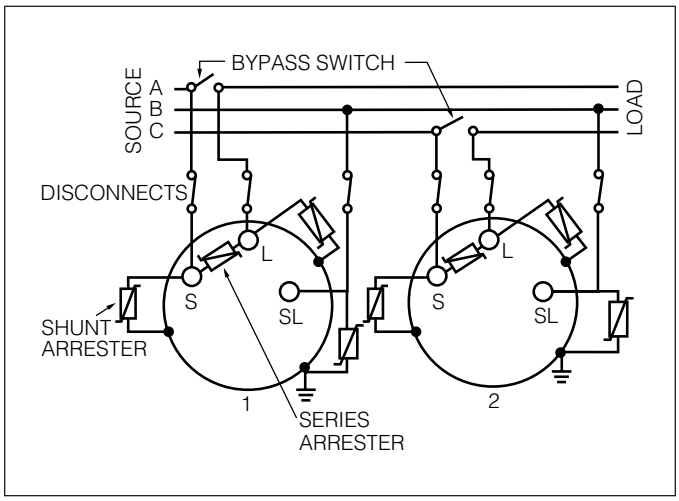

Figure 1-3.
Regulating a three-phase, three-wire circuit with two regulators

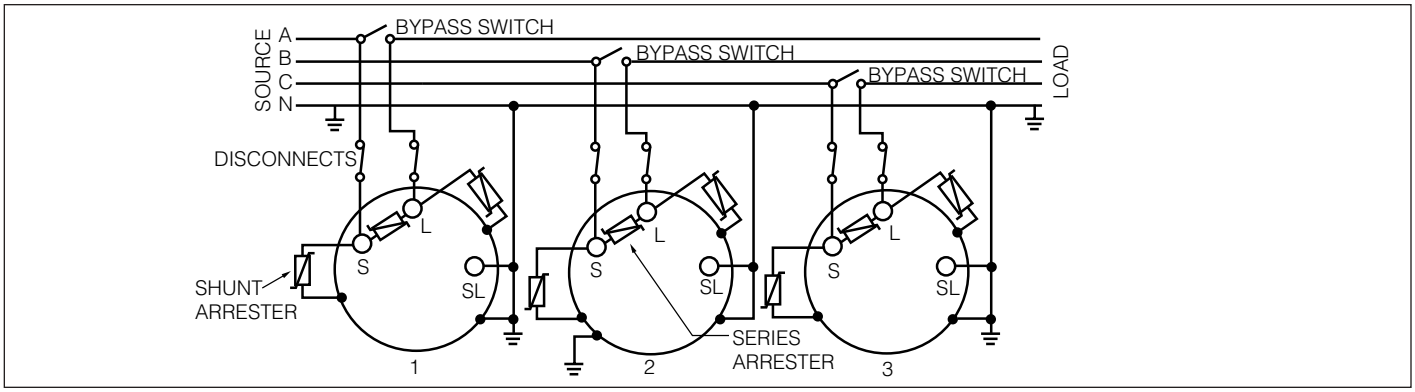

Figure 1-4.
Regulating a three-phase, four-wire, multi-grounded wye (star) circuit with three regulators

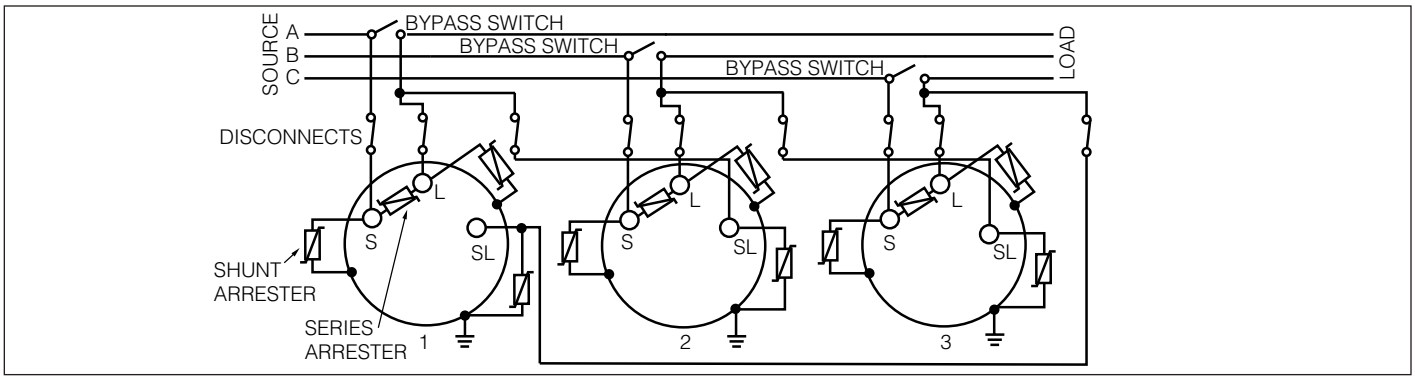

Figure 1-5.
Regulating a three-phase, three-wire circuit with three regulators

NOTE: Individual switches are shown for the bypass and disconnect functions. However, a regulator-bypass-disconnect switch can be used in each phase to perform the bypassing and disconnecting operations in sequence. Each of these switches replaces one bypass and two disconnect switches shown in the diagrams.

Mounting

A regulator can be mounted on a pole, crossarm platform or elevating structure. Regulators are normally provided with either pole mounting brackets or a substation base according to the rating. An elevating structure can be provided to simplify substation installation of regulators requiring a specific live part-to-ground clearance.

The regulator control can be mounted on the regulator tank, or at a point remote from the unit. Rubber-covered cable is available in 5 foot (1.52 m) incremental lengths from 15 feet (4.57 m) to 45 feet (13.7 m) for interconnection between the control and the regulator.

Placing a Regulator in Service

Regulators can be placed in service without interrupting load continuity once bypass and disconnect switches are installed.

WARNING: Closing the bypass switch with the tap changer in any position other than neutral will short-circuit part of the series winding. Before closing the bypass switch, the regulator must be in neutral, the control switch set to OFF and the motor circuit fuse removed.

Procedure A should be followed when one bypass switch and two disconnect switches are used. Procedure B should be followed when a regulator bypass-disconnect switch is used.

A ground pad tapped for 1/2 inch 13 NC thread is provided on the side of the control cabinet.

WARNING: For the protection of personnel from surges while operating the control, the following control enclosure grounding procedures should be followed:
If the enclosure is attached to the regulator tank or is remote from the tank but only accessible with a ladder, then the enclosure should be connected to the regulator-to-ground rod conductor.
If the enclosure is accessible by personnel standing on the ground, then the enclosure should be directly connected to a ground mat and ground rod.

When energizing the control from an external source, use only a 120 V ac source, unless the control is set up for 240 volts, indicated by a decal adjacent to the terminals.

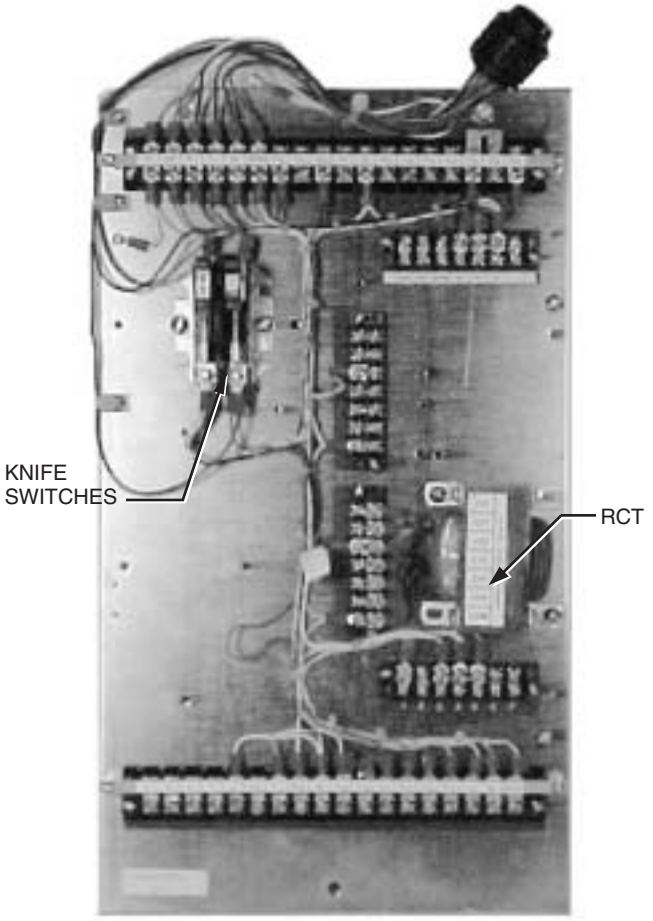

Figure 1-6.
Back panel

CAUTION: Only an ac power supply is to be used to energize the control externally; direct current (dc) to alternating current (ac) inverters are not to be used due to excessive harmonics that can be generated, resulting in damage to the front panel.

CAUTION: Be mindful of polarity when using an external source. Polarity reversal may result in control damage.

Procedure A: One Bypass Switch and Two Disconnect Switches

1. Verify from regulator nameplate that control circuit is connected for proper regulated system voltage.
2. Set power switch to OFF and control switch to OFF.
3. Knife switches on back panel should be set with V_1 (potential switch) (and V_6 if present) closed (pushed in), and C (CT shorting switch) open (pulled out). See Figure 1-6.
4. Close source-load (SL) disconnect switch if available.
5. Close source (S) disconnect switch.
6. Set power switch to INTERNAL and control switch to MANUAL.
7. Lift raise-lower switch to operate tap changer two or three steps, then depress raise-lower switch to return tap changer to the neutral position. (These steps verify that the mechanism is functional.) When on neutral, neutral light will glow continuously and position indicator will point to zero.
8. With regulator in neutral position, set control switch to OFF, set power switch to OFF, open V_1 knife switch (and V_6 if present), and remove 6 A motor fuse.
9. Close load (L) disconnect switch.
10. Open bypass switch. The regulator is now energized.
11. Replace 6 A motor fuse, close V_1 knife switch and set power switch to INTERNAL.
12. Go to Setting the Control for Service, following.

Procedure B: Regulator Bypass-Disconnect Switch

1. Verify from regulator nameplate that control circuit is connected for proper regulated system voltage.
2. Set control switch to MANUAL and power switch to EXTERNAL.
3. Knife switches on back panel should be set with V_1 (potential switch) (and V_6 if present) open (pulled out), and C (CT shorting switch) closed (pushed in). See Figure 1-6.
4. Apply 120 V (or other voltage as indicated by the decal) to external source terminals, if available. If not, proceed to Step 7, below.
5. Lift raise-lower switch to operate tap changer two or three steps, then depress raise-lower switch to return tap changer to neutral position. (These steps verify that the mechanism is functional.) When on neutral, neutral light will glow continuously and position indicator will point to zero.
6. Remove the voltage from external source terminals.
7. With regulator in the neutral position, set control switch to OFF, set power switch to OFF, and remove 6 A motor fuse.
8. Close source-load (SL) disconnect switch. (Delta applications only.)
9. Close regulator bypass-disconnect switch. The regulator is now energized.
10. Replace 6 A motor fuse, close V_1 knife switch (and V_6 if present), open C knife switch, and set power switch to INTERNAL.
11. Go to Setting the Control for Service, following.

Setting the Control for Service

There are more than 50 parameters on the control which are user-selectable. Many of these values pertain to the operation of the advanced features that are not needed for normal regulator operations. A full detailed description of each of the features is given in the Control Advanced Features section, along with set-up instructions.

The control must be energized to perform the programming. This can be accomplished by applying 120 V (or other voltage as indicated by the decal) to the external source terminals and placing the power switch in the external position. Alternately, the regulator may be energized at line potential, and the power switch placed in the internal position. When power is applied to the control, all segments of the display will light, followed by a PASS indication. If the FAIL message is encountered, see Diagnostics, on page 2-5.

Accessing the Control

Before gaining access to change the control settings, the proper security level must be activated. This is accomplished by entering a security code at the Function Code 99 location. Depress the following keys on the keypad:

FUNCTION, 99, ENTER
12121, ENTER

The proper level of security to change operational settings has now been activated.

All programming of the control is done through the keypad or communication ports.

For quick set-up of Cooper Power Systems regulators, see Table 1-1, page 1-5. For complete set-up, see Table1-2, page 1-6 for a detailed checklist for control programming. The only two parameters this checklist does not address are voltage and current calibration, Function Codes 47 and 48.

TABLE 1-1
Setting the Controls for Basic Operation

Keys to Depress	F.C	Display	Description
Security System			
FUNCTION, 99, ENTER	99	_ _ _ _ _	
12121, ENTER	Func	_ _	The security system is now activated for changing operational settings
Set Voltage			
Range: 100.0 - 135.0 (Factory Setting: 120.0)			
Keys to Depress	**F.C**	**Display**	**Description**
1	01	120.0	This is the set voltage as shipped from the factory
Change	01	_ _ _._c	Enter the desired value. Example: 122.0
1220, ENTER	01	122.0	The set voltage is now 122.0 volts.
Bandwith			
Range: 1.0 - 6.0 (Factory Setting: 2.0)			
Keys to Depress	**F.C.**	**Display**	**Description**
2	02	2.0	This is the bandwith as shipped from the factory
Change	02	_._c	Enter the desired value. Example: 3.0
30, ENTER	02	3.0	The bandwidth is now 3.0 volts
Time Delay			
Range: 5 - 180 (Factory Setting: 30)			
Keys to Depress	**F.C.**	**Display**	**Description**
3	03	30	This is the time delay as shipped from the factory
Change	03	_ _ _c	Enter the desired value. Example: 45
45, ENTER	03	45	The time delay is now 45 seconds
Line Drop Compensation, Resistance			
Range: -96.0 - +96.0 (Factory Setting: 0.0)			
Keys to Depress	**F.C.**	**Display**	**Description**
4	04	0.0	This is the resistive compensation as shipped from the factory
Change	04	_ _._c	Enter the desired value. Example: 5.0
50, ENTER	04	5.0	The resistive compensation is now 5.0 volts
Line Drop Compensation, Reactance			
Range: -96.0 - +96.0 (Factory Setting: 0.0)			
Keys to Depress	**F.C.**	**Display**	**Description**
5	05	0.0	This is the reactive compensation as shipped from the factory
Change	05	_ _._c	Enter the desired value. Example: 3.0
30, ENTER	05	3.0	The reactive compensation is now 3.0 volts
Regulator Configuration			
Range: 0 - 2 (Factory Setting: 0 [Wye or Star])			
Keys to Depress	**F.C.**	**Display**	**Description**
FUNCTION, 41, ENTER	41	0	This is the regulator configuration as shipped from the factory
Change	41	_c	Enter the desired value. Example: 1
1, ENTER	41	1	The regulator configuration is now Delta Lag
Control Operating Modes			
Range: 0 - 2 (Factory Setting: 0 [Sequential])			
Keys to Depress	**F.C.**	**Display**	**Description**
FUNCTION, 42, ENTER	42	0	This is the control operating mode as shipped from the factory
Change	42	_c	Enter the desired value. Example: 1
1, ENTER	42	1	The control operating mode is now Time Integrating
System Line Voltage			
Range: 1200 - 36000 (Factory Setting: Regulator Rated Voltage)			
Keys to Depress	**F.C.**	**Display**	**Description**
FUNCTION, 43, ENTER	43	7620	This is the system line voltage for a 7620 volt regulator as shipped from the factory
Change	43	_ _ _ _ _c	Enter the desired value. Example: 7200
7200, ENTER	43	1	The system line voltage is now 7200 volts
Overall Potential Transformer Ratio			
Range: 10 - 300 (Factory Setting: PT ratio for Regulator Rated Voltage)			
Keys to Depress	**F.C.**	**Display**	**Description**
FUNCTION, 44, ENTER	44	63.5	This is the overall PT ratio for a 7620 volt regulator as shipped from the factory
Change	44	_ _ _._c	Enter the desired value. Example: 60.0
600, ENTER	44	60.0	The system line voltage is now 7200 volts
Calendar Clock			
Range: 10 - 300 (Factory Default Setting XX)			
Keys to Depress	**F.C.**	**Display**	**Description**
FUNCTION, 50, ENTER	50	1.01	This is the default value for the date.
Scroll up	50	x.xx	This is the present time (hour/minute).
Scroll up	50	1d 90	This is the default value for the year, 1990.
Change	50	1 _ _c	Enter the desired value for Year. Example: 2000
00, ENTER	50	1 0	The Year is now 2000.
Scroll up	50	2 1	This is the default value for the month, January.
Change	50	2 _ _c	Enter the desired value for Month. Example: October
10, ENTER	50	2 10	The month is now October.
Scroll up	50	3 1	This is the default value for the Day 1.
Change	50	3 _ _c	Enter the desired value for the Day. Example 24.
24, ENTER	50	3 24	The Day is now 24.
Scroll up	50	4 xx	This is the present value for the Hour, xx.
Change	50	4 _ _c	Enter the desired value for Hour. Example: 2:00 P.M.
14, ENTER	50	4 14	The Hour is now 14. Military Time.
Scroll up	50	5 xx	This is the present value for the Minutes. Example: xx.
Change	50	5 _ _c	Enter the desired value for Minutes. Example: 30.
30, ENTER	50	5 30	The Minutes is now 30.
Scroll up	50	6 xx	This is the present value for the Seconds, xx.
Change	50	6 _ _c	Enter the desired value for Seconds. Example 45.
45, ENTER	50	6 45	The Seconds is now 45.

TABLE 1-2
CL-5 Series Control Programming Checklist

Step	Activity/Question	Function Code	Factory Set	Owner Set	Check	Next Step
A	Power up control or run Self Test (FC 91).					Pass = B; Fail = Refer to page 2-5
B	Access Security Level 3.	99	32123			C
C	Set the Forward Power Flow Control Settings -- Set Voltage	1	120			
	Bandwidth	2	2			
	Time Delay	3	30			
	LDC Resistance	4	0			
	LDC Reactance	5	0			D
D	Verify position indicator is in sync with tap changer by stepping through the neutral position.					E
E	Is the Control Tap Position in sync with the position indicator?	12P				No = F; Yes = G
F	Set the Control Tap Position.	12P				G
G	Is Source Side Voltage Calculation required?	39	0			No = J; Yes = H
H	Activate Source Side Calculation.	39		1		I
I	Set Type of Regulator. (A and Series Transformer =1; B=2)	39-1		Nameplate value		J
J	Change Control I.D.?	40	Control Serial No.			No = L; Yes = K
K	Set Control I.D.	40				L
L	Is regulator bank configuration closed or open delta?					No = O; Yes = M
M	Refer to Determination of Leading or Lagging, page 1-7.					N
N	Set Regulator Configuration.	41	0			O
O	Change Operating Mode? (Factory set for sequential)	42	0			No = Q; Yes = P
P	Set Operating Mode.	42				Q
Q	Set System Line Voltage.	43	Rated Voltage			R
R	Set Overall P.T. Ratio. (from Nameplate)	44	Rated P.T.Ratio			S
S	Verify C.T. Primary Rating. (from Nameplate)	45	Rated C.T. Primary			T
T	Change Demand Time Interval?	46	15			No = V; Yes = U
U	Set Demand Time Interval.	46				V
V	Change Tap Changer selection?	49	Nameplate value			No = X; Yes = W
W	Set Tap Changer selection.	49		Nameplate value		X
X	Are date and time correct?	50				No = Y; Yes = Z
Y	Set the required date and time by way of subfunctions- Year	50-1				
	Month	50-2				
	Day	50-3				
	Hour	50-4				
	Minute	50-5				
	Second	50-6				Z
Z	Should control be set up to react to a reverse power flow condition?					No = AA; Yes = BA (Table 1-3)
AA	Verify Reverse Sensing Mode is set on Locked Forward (0).	56	0			AB
AB	Verify the baud rate of Local Channel #1 (Data Reader) is set for 4800.	60	4			AC
AC	Set up Remote Communications Channel #2?					No = AE; Yes = AD
AD	Set Remote Communications Function Codes as desired.	64				
		65				
		66				
		67				
		68-1				
		68-2				AE
AE	Verify the Blocking Status is normal.	69	0			AF
AF	Is Voltage Reduction required?	70	0			No = AH; Yes = AG
AG	Set Voltage Reduction Function Codes as desired.	70				
		72				
		73				
		74				
		75				
		76				
		77				AH
AH	Is Soft Add-Amp required?	79*	0			No = AJ; Yes = AI
AI	Activate Soft Add-Amp.	79*		1		
	Set Add-Amp Raise Limit.	79-1*				
	Set Add-Amp Lower Limit.	79-2*				AJ
AJ	Is Voltage Limiter required?	80	0			No = AL; Yes = AK
AK	Set Voltage Limiter Function Codes as desired.	80				
		81				
		82				AL
AL	Set Profile Recorder Parameters.	85*				
		85-1				
		85-2				
		85-3				
		85-4				
		85-5*				AM
AM	Is Security Override required?	92	0			No = AO; Yes = AN
AN	Set Security Override.	92		1		AO
AO	Change Security Codes?					No = AQ; Yes = AP
AP	Set Security Codes as desired.	96	1234			
		97	12121			
		98	32123			AQ
AQ	Reset Metering & Tap Position.	38				AR
AR	Take Data Reader reading (optional).					AS
AS	Press DISPLAY OFF key to return to Base Security Level.					AT
AT	**CONTROL IS NOW FULLY PROGRAMMED.**					

TABLE 1-3
CL-5 Series Control Programming Checklist for Reverse Power Flow Detection and Operation

Step	Activity/Question		Function Code	Factory Set	Owner Set	Check	Next Step
BA	Is voltage regulation required on the source and load side of regulator?						No = BC; Yes = BB
BB	Is dispersed generation available on load side of regulator?						No = BH; Yes = BI
BC	Is voltage regulation required on the source side of regulator during a reversal of power flow?						No = BD; Yes = BJ
BD	Is the load side of regulator dedicated to a Co-generation facility?						No = BE; Yes = BK
BE	Is Tap to Neutral required for excursions below a reverse power threshold?						No = BF; Yes = BL
BF	Set Reverse Sensing Mode to Reverse Idle.		56		2		BG
BG	Is source side metering required during a reversal of power flow?						No = BQ; Yes = BN
BH	Set Reverse Sensing Mode to Bi-directional.		56		3		BM, BN & BO
BI	Set Reverse Sensing Mode to Reactive Bi-directional		56		6		BM, BN & BO
BJ	Set Reverse Sensing Mode to Lock Reverse.		56		1		BM & BO
BK	Set Reverse Sensing Mode to Co-Generation.		56		5		BM, BN & BO
BL	Set Reverse Sensing Mode to Neutral Idle.		56		4		BM & BO
BM	Set the Reverse Power Flow Control Settings -	Set Voltage	51	120			
		Bandwidth	52	2			
		Time Delay	53	30			
		LDC Resistance	54	0			
		LDC Reactance	55	0			BR
BN	Set Reverse Power Threshold (%)		57	2			BR
BO	Does regulator have an internal or external source side sensing voltage?						No = BP; Yes = BR
BP	Activate Source Side Calculation.		39		1		BQ
BQ	Set Type of Regulator. (A and Series Transformer =1; B=2)		39-1		Nameplate value		BR
BR	**REQUIRED REVERSE MODE IS PROGRAMMED.**						See Table 1.2 - AB

Delta-connected (Line-to-line) Regulators

Determination of Leading or Lagging

For a regulator to operate properly when connected phase to phase, it is necessary for the control to be programmed with the correct regulator configuration in Function Code 41. It must be determined whether it is connected “leading” or “lagging”. The control aids the operator in making this determination.

1. Regulator must be installed.
2. Power switch must be set to Internal.
3. V_1 knife switch (and V_6, if present) must be closed.
4. Knife switch C must be open. Current must be flowing.
5. Control (Auto/Remote-Off-Manual) switch may be in any position.
6. For regulator #1, set Function Code 41 to 1 (Delta Lag) and record the Power Factor, Function Code 13.
7. For the same regulator set Function Code 41 to 2 (Delta Lead) and record the Power Factor.
8. Repeat steps 6 and 7 for each regulator in the bank.

For each regulator, one of the two power factor values will be reasonable and the other will be unreasonable. Set the Regulator Configuration (FC 41) to the value which produced the reasonable power factor.

For one regulator: Set Function Code 41 to the value which produced the reasonable power factor.

For two regulators in open delta: See the example in Table 1-4. In an open delta connection one of the regulators will always be leading and the other lagging. The reasonable power factor for each regulator should be very close to the typical power factor of the system. In this example, regulator #1 is the lagging unit and regulator #2 is the leading unit.

For three regulators in closed delta: In closed delta, all three regulators are either leading or lagging, depending on how they are connected relative to generator phase rotation.

TABLE 1-4
Sample Power Factor Values for Regulators Connected in Open Delta Configuration

Configuration (FC 41) Set to This Value	Recorded Power Factor (FC 13)	
	Reg. #1	Reg. #2
1 (Delta Lag)	0.94*	-0.77
2 (Delta Lead)	0.17	0.93*

*Reasonable power factor values.

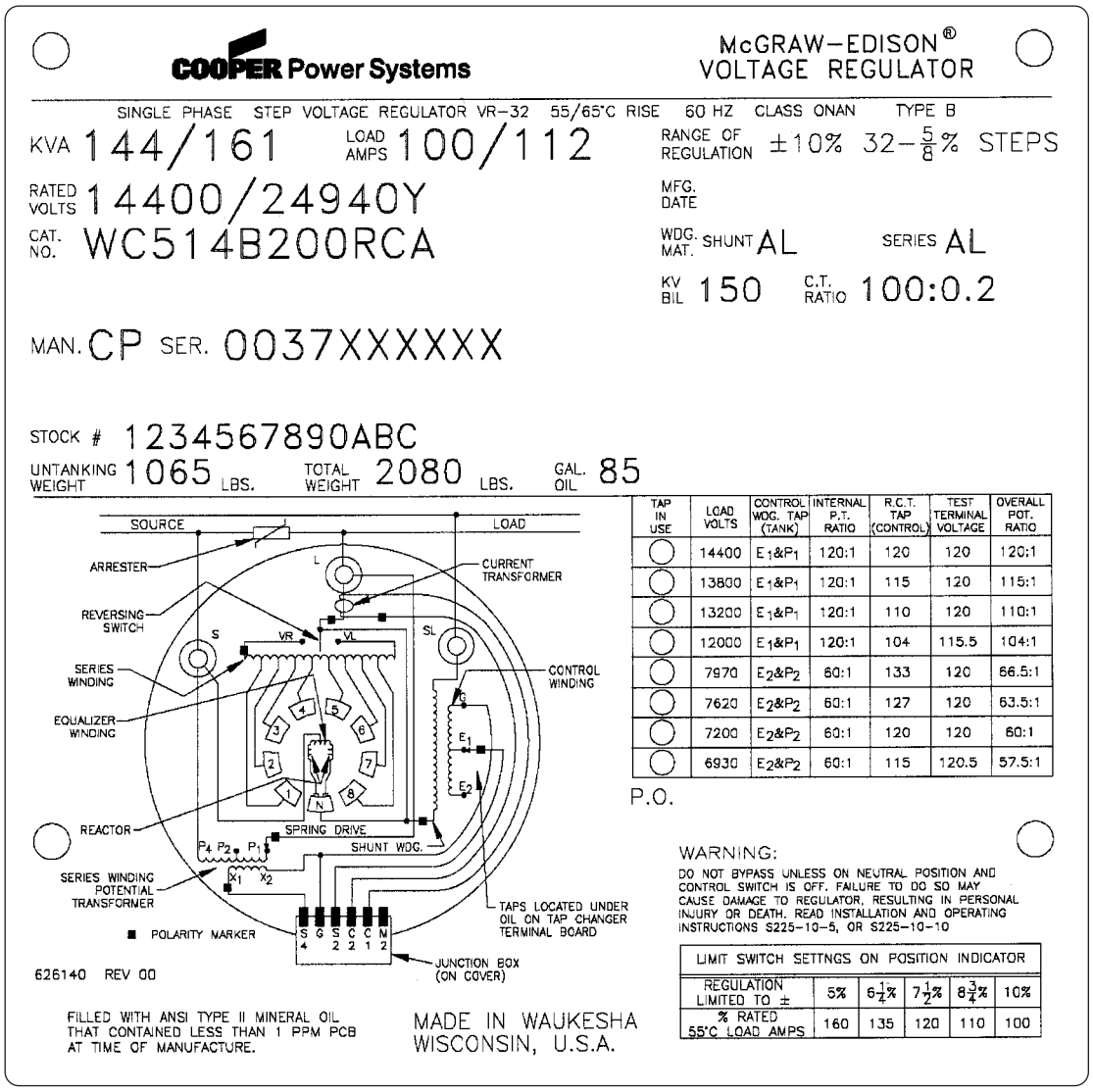

Figure 1-7.
Nameplate of a 60 hertz regulator with an internal series winding P.T.

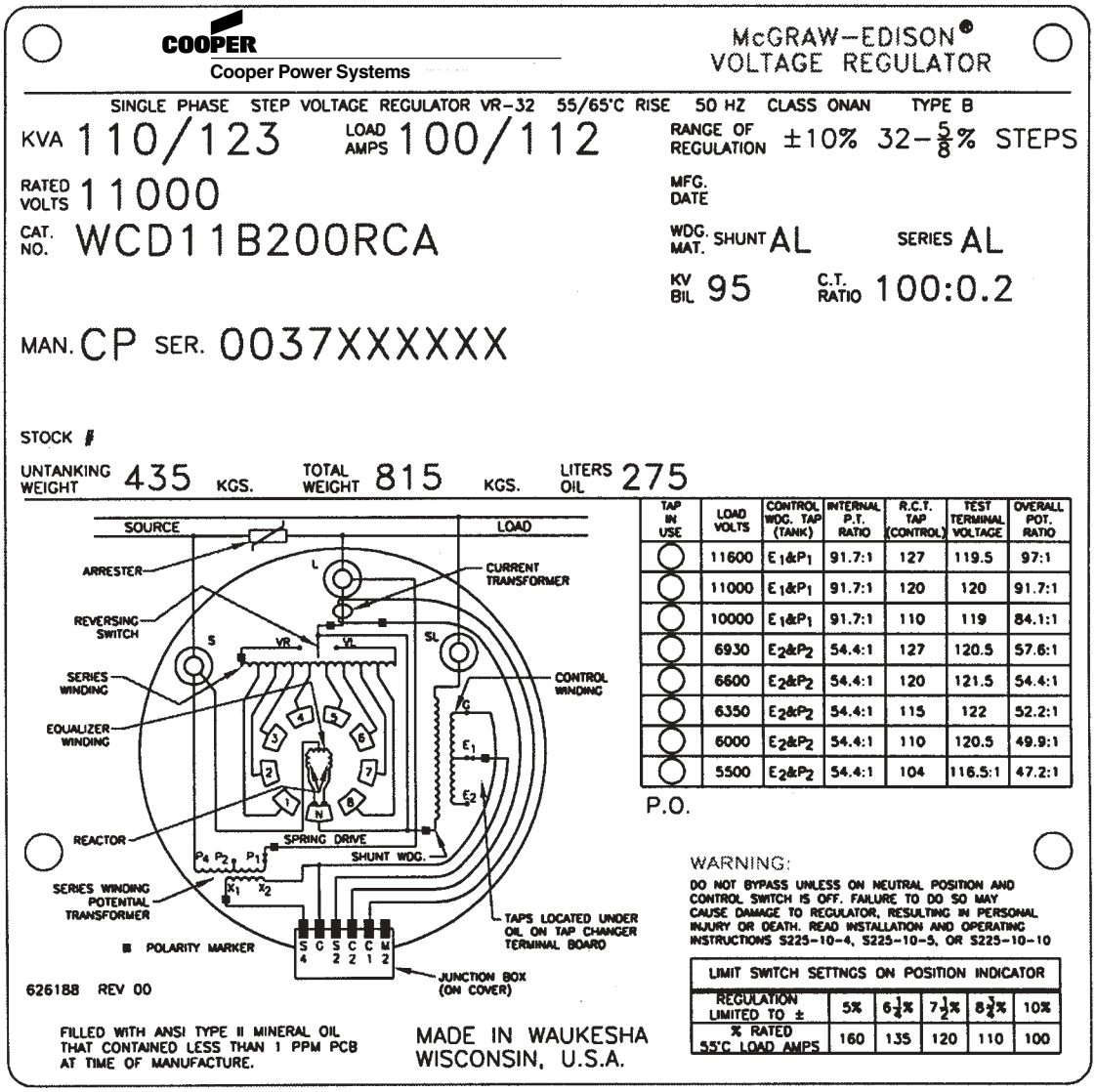

Figure 1-8.
Nameplate of a 50 hertz regulator indicating metric weights and volumes

Operational Check

Pre-Installation Operational Check

The CL-5 Series Control has the facilities for either manual or automatic operation of the tap changer, using either the internal source of power (the regulator), or an external source. To perform an operational check of the control before installing the regulator, follow these steps:

1. Open V_1 (and V_6, if present) knife switch(es) located on control backpanel.
2. Place POWER switch in OFF position, and CONTROL switch in OFF position.
3. Connect a variable 120-volt 50/60 Hz source to EXTERNAL SOURCE terminals. Grounded side of external source must connect to ground (white) terminal on control.
4. Place POWER switch in EXTERNAL position.
5. Move CONTROL switch to MANUAL, and depress and hold RAISE-LOWER momentary toggle switch. Allow tap changer to operate to 8L, the 5% buck position.
6. Hold up on RAISE-LOWER momentary toggle switch. Allow tap changer to operate to 8R, the 5% boost position.
7. Now place Control switch in the AUTO/REMOTE position.
8. Increase variable voltage source so applied voltage is out of band. Note that “HIGH” band annunciator in display will come on. After time delay period, control will issue “LOWER” tap change signals. Check to ensure that operations counter is registering tap changes by pressing “0” key on keypad.
9. Decrease variable voltage source so applied voltage is out of band. Note that “LOW” band annunciator in display will come on. After time delay period, control will issue “RAISE” tap change signals. Check to ensure that operations counter is registering tap changes.
10. Place CONTROL switch in MANUAL position and manually return tap changer to NEUTRAL. When on NEUTRAL, NEUTRAL LAMP will light continuously and position indicator will point to zero.
11. Place CONTROL switch in OFF position.
12. Press down on momentary toggle switch labeled DRAG HAND RESET, and position indicator drag hands will reset around indicating hand.
13. Turn POWER switch to OFF and disconnect power supply from EXTERNAL SOURCE terminals.

In-Service Operational Check

With the control now set for basic operation, an operational check of manual and automatic operation should be performed as follows:

1. Depress “8” key to display compensated voltage.
2. Place control switch in MANUAL position.
3. Lift up on Raise/Lower switch to activate a raise operation.
4. Allow tap changer to operate for enough steps to take voltage out of band.
5. Place control switch in the AUTO position. After time delay period, the control should cause the regulator to step down to the top band edge. (EXAMPLE: 120 V and a 2 V B.W. = 121 V top band edge.) This should be shown in the display.
6. After voltage is brought in-band and tap changing has stopped, move control switch to the MANUAL position.
7. Press down on Raise/Lower switch to activate a lower operation.
8. Allow tap changer to operate for enough steps to take voltage out of band.
9. Place control switch in the AUTO position. After time delay period, the control should cause the regulator to step up to the lower band edge. (EXAMPLE: 120 V and a 2 V B.W. = 119 V lower band edge.) This should be shown in the display.

Field Calibration Check

If the operator also desires to check the calibration of the control, perform the steps listed below.

NOTE: Field calibration checks are only an indication of calibration, and are not nearly as precise as the laboratory procedure described in the Troubleshooting Guide section of this manual.

1. Connect an accurate true-RMS responding voltmeter to the voltmeter terminals.
2. The easiest and most direct way to perform a calibration check is to compare the voltage that the control “sees” to the voltage measured at the test terminals. This is accomplished by accessing the keypad and keying:

   FUNCTION, 47, ENTER.
3. Under ideal conditions, the displayed voltage of the control will match the voltage of the voltmeter. Realistically, the voltages may be slightly different because:

a. The metering and operation is based upon the RMS value of the fundamental power line frequency. Thus, the metered values exclude the influences of harmonic voltages which are probably present on the line. A true-RMS meter however, will include these harmonic voltages in its calculations of the RMS voltage. This does not present a problem with either metering device, since each device uses a different approach to metering.

b. The calibration of the voltmeter being used for measurement is probably not exact. Even a very good meter with a basic accuracy of 0.5% could be in error by as much as 0.6 V (out of 120 V), and still be considered to be "in-calibration." The control is calibrated using a conditioned power supply and reference voltmeters which are periodically calibration-checked, traceable to the National Bureau of Standards.

NOTE: The control is designed to perform ratio correction in software. Through the use of the ratio correcting transformer (RCT) located on the back panel, the voltage brought to the front panel is usually already corrected to the 120 V base voltage. However, there are some ratings in which this voltage is not fully corrected by the RCT. Column 6 in Table 1-10 or 1-11, page 1-21 gives a general indication of these voltages, however, always refer to the nameplate which provides the specific information for the particular regulator.

Whatever voltage results from dividing the nominal system voltage, FC43, by the overall P.T. ratio, FC44, is considered by the control to be the nominal voltage. Therefore, when that voltage appears at the input of the control, 120 volts will be reported as the output voltage, FC6 (whether the nominal is actually 120 or not). Likewise, the compensated voltage, FC8, and input voltage, FC7, will be scaled accordingly. If the regulator is equipped and programmed for reverse power operation, the voltage displayed at Function Code 8 will be correct even during reverse power conditions.

The load voltage, FC10, source voltage, FC11, and calculated parameters such as the kVA, kW and kvar are not scaled similar to FCs 6 and 8. Instead, they reflect the true value of line voltage.

NOTE: The voltage measured at the test terminals during reverse power flow is the new source voltage at the L bushing of the regulator.

Removal From Service

Determining Neutral Position

WARNING: In order to prevent possible damage to equipment and injury to personnel, prior to bypass switching being attempted, the following must be accomplished: 1) The regulator must be placed in the neutral position; 2) action must be taken to prevent tap changer operation while the bypassing is being performed.
If the regulator is in any position other than neutral, part of the series winding will be shorted if bypass switch is closed. This results in high circulating current which can severely damage the regulator. If catastrophic failure occurs, it could pose a threat of injury or death to operating personnel.

Return the regulator to neutral. The regulator can be safely removed from service without interrupting load continuity only in the neutral position. It is recommended to use more than one method to determine whether a regulator is on neutral.

To Return the Regulator to Neutral

1. Use Raise/Lower switch to bring regulator to neutral position.

WARNING: A regulator should be bypassed with the line energized only if both the position indicator and the neutral light indicate neutral. If both do not indicate neutral, the line should be de-energized to avoid shorting part of the series winding.

WARNING: Always use the control switch (labeled AUTO/REMOTE-OFF-MANUAL) to operate the regulator, not the power switch. Failure to do so may result in the tap changer stepping off of neutral immediately upon being energized.

2. When in neutral, neutral light will light continuously and position indicator will point to zero.

WARNING: To stop the regulator on the neutral position, the control switch should be turned to OFF during the switching operation from positions "1" or "-1" to position zero. Switching to OFF prior to reaching the neutral position prevents overshoot.

3. To increase safety, we recommend verifying that the regulator is in the neutral position using the following three methods:
   a. Verify that the neutral indicator light on the control is indicating the neutral position. Neutral is indicated only when the light is continuously illuminated.
   b. Verify that position indicator is in the neutral position.
   c. Using an acceptable method, verify that there is no voltage difference between the source and load bushings.
4. When the regulator has been placed in the neutral position, and prior to bypassing, additional safety action must be taken to ensure that the tap changer will not inadvertently switch to an off-neutral position. This can be accomplished by doing the following:
   a. Place the control (Auto/Remote-Off-Manual) switch in OFF position.
   b. Remove motor fuse.
   c. Place control power switch in OFF position.
   d. Open V_1 knife switch (and V_6 if present) located on control back panel.

   If the precautions listed above are taken, the likelihood of damaging a regulator or injuring personnel is eliminated.

De-energizing the Regulator

Once it has been established that the regulator is on neutral, immediately proceed with the following steps:

1. Place control (Auto/Remote-Off-Manual) switch in OFF position.
2. Place power switch in OFF position.
3. Open V_1 knife switch (and V_6 if present) on back panel (see Figure 1-7, page 1-8).
4. Remove the 6 A motor fuse.
5. Close bypass switch.
6. Open load (L) disconnect switch.
7. Open source (S) disconnect switch.
8. Open source-load (SL) disconnect switch, if available.

NOTE: If a regulator bypass disconnect is used in place of three separate switches, steps 5, 6 and 7 are carried out in one operation.

Maintenance Program

Periodic Inspections

Step-type voltage regulators are designed to provide many years of trouble-free operation. Proper operation of the regulator can be checked without removing the unit from service. Using the manual mode of operation, run the regulator several steps in the raise direction, and then switch the control back to auto. After the time delay, FC3, expires, the regulator should return to band edge. When this has been completed, use the manual mode of operation to run the regulator several steps in the lower direction, and then switch the control back to auto. After the time delay, the regulator should return to band edge.

If the regulator will not operate properly, a substitute control can be tried before removing the unit from service. Refer to the following sections for proper procedures on removing and replacing the control.

Since the usable life of a regulator is affected by its application, it may be desirable to periodically remove the regulator from service and untank the unit to verify contact wear, oil dielectric, etc. The time for this will vary, depending on a specific user's past experience.

The oil should be checked (a) prior to energization, if the regulator has not been energized for a long time period, or (b) at normal maintenance intervals. Table 1-5 shows the characteristics that the oil should meet.

TABLE 1-5
Oil Characteristics*

	New	Used
Dielectric Strength (kV minimum)		
ASTM D1816-84		
0.08 inch gap	40	34
ASTM D877-87	30	26
Interfacial Tension		
ASTM D971-91		
(mN/m)	35	24
Water		
ASTM D1533-88		
(ppm maximum)	25	35

*Per C57.106.

Removal of Control Front Panel

The front panel may be removed from the regulator with the regulator energized.

To open the front panel, unscrew the captive knurled knobs on the left side of the panel. This allows the control to swing open on its hinges. With the control open, the back panel is readily accessible. The design of the control enclosure, back panel and front panel enable easy replacement of the front panel, leaving the back panel, control enclosure, and cable intact. To remove the front panel, proceed as follows:

WARNING: Push the C shorting switch closed before attempting to remove the fanning strip. Failure to do so may open the regulator CT circuit, producing a flashover in the control.

1. Push closed the current shorting switch, C. This shorts out the secondary of the regulator CT.

NOTE: Regulators shipped with a quick disconnect cable contain a solid-state CT shorting board in the junction box. This device automatically places a burden on the CT anytime the CT circuit is opened. For consistency, it is recommended that the CT shorting switch be used whenever it is present on the back panel.

2. Pull open disconnect switch, V_1, (and V_6 if present). This de-energizes terminal board TB_2.
3. Loosen screws on terminal board TB_2 at the bottom of back panel.
4. Pull fanning strip (a series of terminals, wired to front panel) free from terminal strip.
5. Disconnect front panel ground lead from back panel.

The front panel can now be lifted off its hinges. Care should be taken to prevent damage to a control front panel while in transit and/or storage.

Replacement of Control Front Panel

To replace a front panel in the control enclosure, follow the procedure outlined below:

1. Engage the front panel on enclosure hinges.
2. Connect front panel ground lead to back panel.
3. Insert fanning strip from front panel wiring harness under TB_2 terminal board screws.
4. Tighten screws on interconnecting terminal board.
5. Push closed the disconnect switch, V_1, (and V_6 if present).
6. Pull open the current shorting switch, C.
7. Close panel and tighten panel locking screws.

WARNING: Do not pull open the current shorting switch, C, until the screws have been tightened on the interconnecting terminal block. Failure to do so could open the regulator CT secondary causing a flashover in the control.

Untanking the Regulator

WARNING: When the internal assembly is lifted for inspection or maintenance, blocking should be placed between the cover and the top of the tank to keep the assembly from falling should the lifting apparatus fail.

CAUTION: Before untanking a regulator that contains a thermometer, (1) lower the oil level below the thermometer, then (2) remove the thermometer well. Failure to do so will result in damage to the thermometer well and/or spillage of oil when the internal assembly is lifted.

CAUTION: Do not suspend the control box using the control cable.

1. Manually run tap changer to neutral, if possible. If not, record position indicator reading before proceeding to untank.
2. Disconnect control cable from bottom of junction box (Figure 1-9).
3. Remove series arrester. Release internal pressure using pressure relief device on side of regulator.
4. Free cover by removing clamping ring or cover bolts.
5. Attach sling or hooks with spreader bar (Figure 1-10) to lifting eyes and raise the cover, with the attached core-and-coil assembly, until the top of the coil is approximately one inch under oil. As a safety precaution, blocking between the cover and tank lip should be used until inspection of the tap changer or other maintenance is complete. A service cable assembly is available for operating an untanked regulator from the mounted control cabinet, if connection cable is not long enough. Contact customer service for availability.

Figure 1-9.
Quick Disconnect Cable

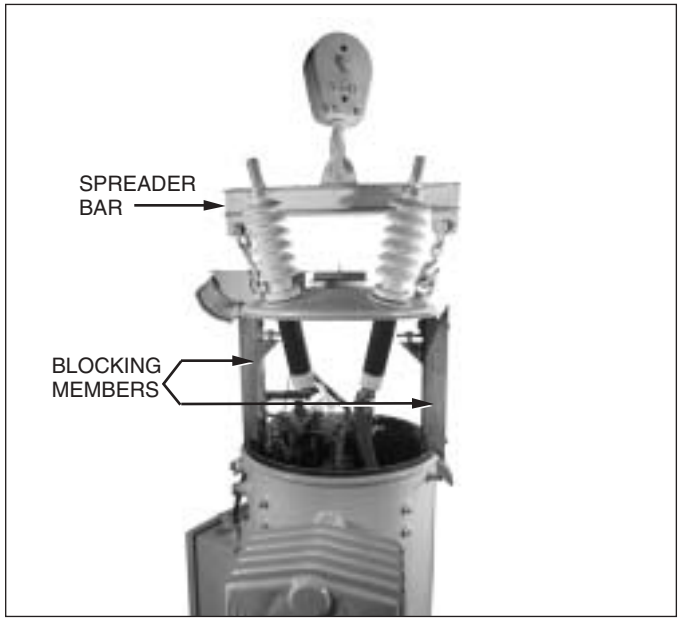

Figure 1-10.
Untanking

Retanking the Regulator

Retank the regulator as follows:

1. Be sure position indicator shows present position of the tap changer. If not, remove indicator cable in junction box from position indicator shaft after loosening set screw. Rotate indicator shaft until proper position is reached, then tighten set screw. Verify coordination of position indicator with tap changer in the neutral position (control neutral light on). Refer to page 6-3 for position indicator replacement.
2. Check gasket seat surfaces on cover and tank and wipe clean. Wipe gasket and position it on tank lip. Loosen horizontal side channel bolts to ensure proper seating of regulator in tank and proper cover seal.
3. Raise cover assembly and attached components over tank. Make certain of proper orientation.
4. Lower unit, rotating channels counter-clockwise into tank guides.
5. Seat unit in tank. Tighten cover clamps or bolts.

NOTE: Tap cover with a rubber hammer around edge to properly seal gasket while tightening cover band.

6. Check and retighten horizontal side channel bolts through handhole, if required.
7. Properly reseal handhole cover, being careful not to damage cover or insulation on the handhole cover bolt.
8. Connect control cable to connector at bottom of junction box.

Maintenance

The following is the recommended maintenance program for a regulator that has been untanked:

1. Check all connections for tightness.
2. Check all contacts for wear (refer to S225-10-2).
3. Avoid removing main core-and-coil assembly from oil, except when a winding failure occurs. Blocking between cover and tank lip should be used to suspend core-and-coil assembly within oil until inspection of tap changer or other maintenance is complete.

   If it is necessary to remove main core-and-coil assembly from oil, the following steps should be followed.

   a. Tap changer must not be subjected to temperatures above 150°F (66°C). It must be removed if the unit is baked at higher temperatures.

b. If unit is out of oil more than four hours, it must be rebaked for a minimum of 24 hours at 100°C (212°F). The maximum number of times a unit should be rebaked is twice over its life.

c. Within four hours after bake, the unit should be retanked and filled with oil.

d. It is recommended that a vacuum be pulled on the unit for at least one hour (2 mm of vacuum or better) after the unit is completely refilled with oil. If vacuum processing is not available, allow entire internal assembly to soak in oil for at least five days before energizing.

Construction

Surge Protection

Series Arrester

All VR-32 Regulators are equipped with a bypass arrester connected across the series winding between the source (S) and load (L) bushings. This arrester limits the voltage developed across the series winding during lightning strikes, switching surges and line faults. The series surge arrester can be seen in Figure 2, page 3. A heavy-duty MOV-type series surge arrester of 3 kV offers series winding protection on all regulators except those rated 22,000 V and greater, which have a 6 kV MOV-type series surge arrester.

Shunt Arresters

A shunt arrester is a recommended accessory on the VR-32 regulator for protection of the shunt winding. The shunt arrester is a direct-connected arrester mounted on the tank and connected between the bushing and ground (earth). It is recommended that arresters be applied to all non-grounded bushings.

For best results, locate these arresters on the mounting pads provided on the tank near the bushing. Connect the arrester and the regulator tank to the same ground connection using the shortest cable possible. Shunt arrester application data is listed in Table 1-6.

TABLE 1-6
Shunt Arrester Application Data

Regulator Voltage Rating	Recommended MOV Shunt Arrester Ratings (kV)	Regulator Voltage Rating	Recommended MOV Shunt Arrester Ratings (kV)
2500	3	14400	18
5000	6	15000	21
6600	9	19920	27
7620	10	22000	27
8660	12	33000	36
11000	15	34500	36
13800	18		

Position Indicator & ADD-AMP Capability

The position indicator (Figure 1-11) is mounted on a junction box on the cover of the regulator and is directly connected to the tap changer by a flexible drive shaft passing through the junction box and terminal board via a sealing gland.

The indicator face is graduated in steps. Drag hands indicate the maximum and minimum positions attained during raise and lower operations. The drag hands are automatically reset around to the main hand position by operating the drag hand reset switch on the control front panel.

During forward power flow the main hand of the position indicator will be to the right of the neutral position when the regulator is boosting. **During reverse power flow the main hand will be to the left of the neutral position when the regulator is boosting.**

The ADD-AMP feature of VR-32 regulators allows increased current capacity by reducing the regulation range. This is accomplished by either setting limit switches in the position indicator or enabling function code 79 (soft ADD-AMP) to prevent the tap changer from traveling beyond a set position in either raise or lower directions.

The limit switches have scales graduated in percent regulation, and are adjustable to specific values of 5, 6¼, 7½, 8¾, and 10% regulation to alter the regulation range. These percentages translate to tap position limitations of 8, 10, 12, 14, or 16 raise or lower. The five possible load current ratings associated with the reduced regulation ranges are summarized in Tables 1-7 and 1-8. Higher regulation ranges are realized in closed delta application. When using the limit switches, a detent stop at each setting provides positive adjustment. Settings other than those stops are not recommended. The raise and lower limits need not be the same value unless reverse power is possible. The regulator will stay within the ADD-AMP limits set forth by the control or the position indicator, whichever limit is of a lower regulation percentage.

NOTE: If the ADD-AMP limits have been programmed into the control (soft ADD-AMP) and the limit switches have not been set, it is possible to manually step the tap changer beyond the ADD-AMP limit. If the unit is switched back to automatic mode, the control will step the regulator back to within the ADD-AMP limits set in the control.

See also page 6-3 for position indicator replacement and calibration.

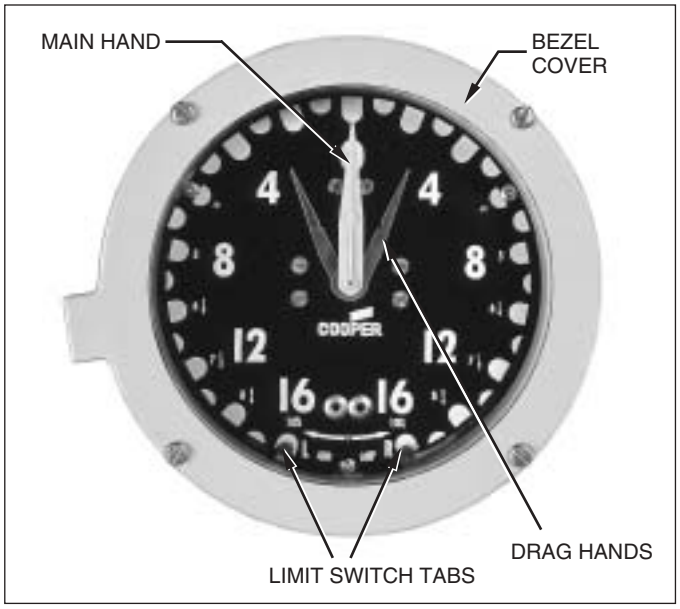

Figure 1-11.
Position Indicator

Setting the Manual (Hard) Limit Switches

Before setting the manual limit switches, be sure the new settings will not conflict with the present tap changer position. Do not set the switches below the indicated tap changer position. For example, if the main hand is at step 12 and the change to be made is from plus or minus 10% (step 16) to plus or minus 5% (step 8), run the tap changer back to step 7 or less, manually. Then set the limit switches for plus or minus 5% regulation.

Limit switches should be set in anticipation of the maximum deviation of primary voltage. For example, on a circuit where 7200 V is to be maintained, plus or minus 10% will permit voltages between 6480 V and 7920 V to be regulated effectively. For voltages outside this range, the regulator will not be able to return the voltage to the preselected level (7200 V). Five percent regulation would accommodate circuit voltages between 6840 and 7560 V, maintaining 7200 V for all voltages in this range.

To set the limit switches, follow this two-step procedure:

1. Loosen the captive bezel securing screws and swing the bezel open.
2. Lift the limit switch adjustment lever free of the detent and slide it to the new setting allowing the lever to snap into the detent stop.

Internal Construction & Wiring Diagrams

The main core-and-coil assemblies are of the shell-form configuration. The series winding on the input (source) side of the regulator (Figure 1-12) allows all windings (control, shunt and series) to be located in one coil assembly. The load voltage is monitored by the control winding.

Regulators that have the series winding on the output (load) side (Figure 1-13) have a separate potential transformer installed on the load side in lieu of a control winding.

The control winding or separate potential transformer supplies a voltage for the tap changer motor and the control sensing circuit. Additional taps are available on them for line voltages lower than rated voltage.

Most regulators, depending upon the rating, have an equalizer winding. This winding improves contact life for high-current applications.

Figure 1-14 shows a typical regulator power circuit with a series transformer. This design is utilized when the load current rating exceeds the tap changer rating. In this type of design, the series transformer winding losses are a function of the load alone and are independent of the tap position. Because of this, limiting the range of voltage regulation does not reduce losses and therefore, the ADD-AMP feature is not applicable.

The bridging reactor is a core-form design, consisting of a coil on each leg of one core. The inside half of one coil is connected to the outside half of the other coil and vice versa, providing equal current in each half of the reactor winding. This interlacing of the two coils reduces the interwinding leakage reactance to a very low value. The reactor is completely isolated from ground by stand-off insulators since the reactor coil is at line voltage above ground. The reactor core, core clamps and other associated parts approach this level.

The current transformer is a toroid, through which the load current passes. It furnishes a current proportional to load current for the line-drop compensator and metering features.

The tap changer enables the regulator to provide regulation in smooth, accurately proportioned steps at a controlled speed that minimizes arcing and extends contact life. Figures 6-3 and 6-4 in the Troubleshooting section illustrate **typical** internal wiring schemes of the various types of regulator constructions. Most of the wiring is on the tap changer itself. Application, troubleshooting and operation of the tap changer and related components are covered extensively in Service Manual S225-10-2.

The terminal board inside the junction box on the cover connects the internal tank wiring to the position indicator and control. The junction box wiring is shown in Figure 6-1, page 6-5.

TABLE 1-7
ADD-AMP Capabilities of 60 Hz Ratings

Rated Volts	Rated kVA	†Load Current Ratings (amperes)				
		Regulation Range (Wye and Open Delta)				
		±10%	±8.75%	±7.5%	±6.25%	±5%
		Regulation Range (Closed Delta)				
		±15%	±13.1%	±11.3%	±9.4%	±7.5%
2500	25	100	110	120	135	160
	50	200	220	240	270	320
	75	300	330	360	405	480
	100	400	440	480	540	640
	125	500	550	600	668	668
	167	668	668	668	668	668
	250	1000	1000	1000	1000	1000
	333	1332	1332	1332	1332	1332
	416.3	1665	1665	1665	1665	1665
5000	25	50	55	60	68	80
	50	100	110	120	135	160
	100	200	220	240	270	320
	125	250	275	300	338	400
	167	334	367	401	451	534
	250	500	550	600	668	668
	333	668	668	668	668	668
	416.3	833	833	833	833	833
7620	38.1	50	55	60	68	80
	57.2	75	83	90	101	120
	76.2	100	110	120	135	160
	114.3	150	165	180	203	240
	167*	219/232	241/255	263/278	296/313	350/370
	250*	328/347	361/382	394/417	443/469	525/556
	333*	438/464	482/510	526/557	591/625	668
	416.3*	548/580	603/638	658/668	668	668
	500*	656/668	668	668	668	668
	667*	875/926	875/926	875/926	875/926	875/926
	833*	1093/1157	1093/1157	1093/1157	1093/1157	1093/1157
13800	69	50	55	60	68	80
	138	100	110	120	135	160
	207	150	165	180	203	240
	276	200	220	240	270	320
	414	300	330	360	405	480
	500	362	398	434	489	579
	552	400	440	480	540	640
	667	483	531	580	652	668
	833	604	664	668	668	668
14400	72	50	55	60	68	80
	144	100	110	120	135	160
	288	200	220	240	270	320
	333	231	254	277	312	370
	416	289	318	347	390	462
	432	300	330	360	405	480
	500	347	382	416	468	555
	576	400	440	480	540	640
	667	463	509	556	625	668
	720	500	550	600	668	668
	833	578	636	668	668	668
19920	50	25.1	28	30	34	40
	100	50.2	55	60	68	80
	200	100.4	110	120	135	160
	333	167	184	200	225	267
	400	200.8	220	240	270	320
	500	250	275	300	338	400
	667	335	369	402	452	536
	833	418	460	502	564	668
	1000	502	552	602	668	668

† 55/65°C rise rating on VR-32 regulators gives an additional 12% increase in capacity if the tap changer's maximum current rating has not been exceeded. For loading in excess of the above values please refer to customer service.

* Regulators are capable of carrying current corresponding to rated kVA when operated at 7200 Volts.

TABLE 1-8
ADD-AMP Capabilities of 50 Hz Ratings

Rated Volts	Rated kVA	†Load Current Ratings (amperes)				
		Regulation Range (Wye and Open Delta)				
		±10%	±8.75%	±7.5%	±6.25%	±5%
		Regulation Range (Closed Delta)				
		±15%	±13.1%	±11.3%	±9.4%	±7.5%
6600	33	50	55	60	68	80
	66	100	110	120	135	160
	99	150	165	180	203	240
	132	200	220	240	270	320
	198	300	330	360	405	480
	264	400	440	480	540	640
	330	500	550	600	668	668
	396	600	660	668	668	668
11000	55	50	55	60	68	80
	110	100	110	120	135	160
	165	150	165	180	203	240
	220	200	220	240	270	320
	330	300	330	360	405	480
	440	400	440	480	540	640
	550	500	550	600	668	668
	660	600	660	668	668	668
15000	75	50	55	60	68	80
	150	100	110	120	135	160
	225	150	165	180	203	240
	300	200	220	240	270	320
	450	300	330	360	405	480
	600	400	440	480	540	640
	750	500	550	600	668	668
22000	110	50	55	60	68	80
	220	100	110	120	135	160
	330	150	165	180	203	240
	440	200	220	240	270	320
	660	300	330	360	405	480
33000	165	50	55	60	68	80
	330	100	110	120	135	160
	495	150	165	180	203	240
	660	200	220	240	270	320

† 55/65°C rise rating on VR-32 regulators gives an additional 12% increase in capacity if the tap changer's maximum current rating has not been exceeded. For loading in excess of the above values please refer to customer service.

TABLE 1-9
Current Transformer Applications (50 & 60 Hz)

Regulator Current Ratings	C.T. Primary Current
25	25
50	50
75	75
100	100
150	150
167, 200	200
219, 231, 250	250
289, 300	300
328, 334, 347, 400	400
418, 438, 463, 500	500
548, 578, 656, 668	600
833, 875, 1000, 1093	1000
1332, 1665	1600

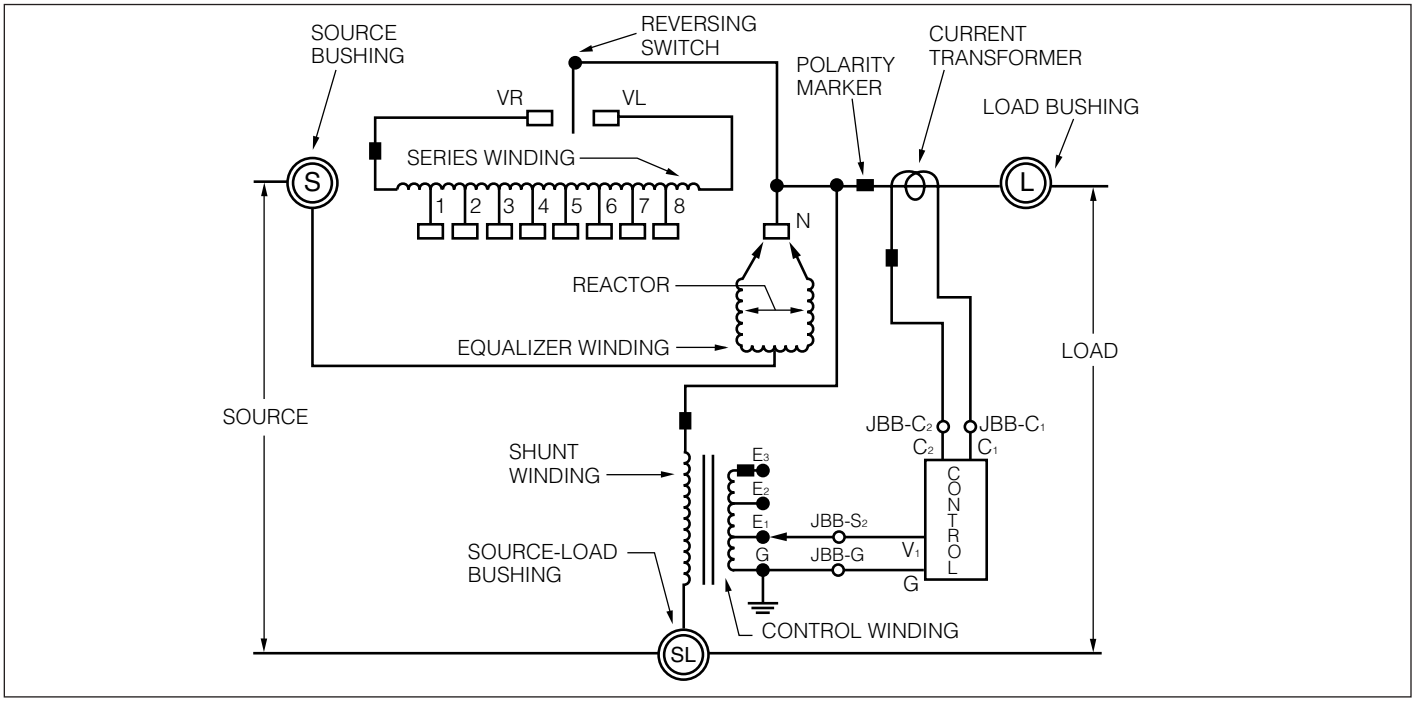

Figure 1-12.
Power circuit — series winding located on the source-side (ANSI Type B)

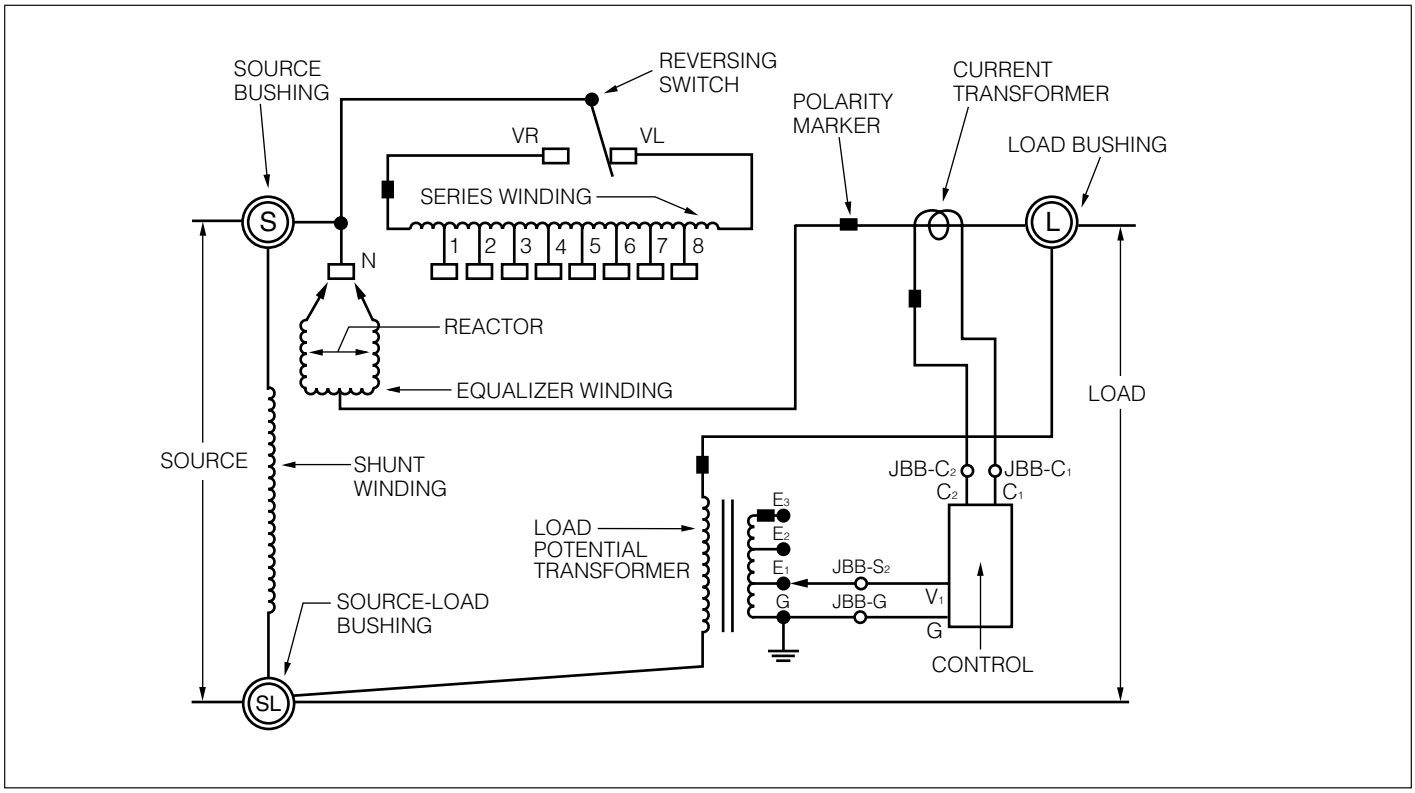

Figure 1-13.
Power circuit — series winding located on the load-side (ANSI Type A)

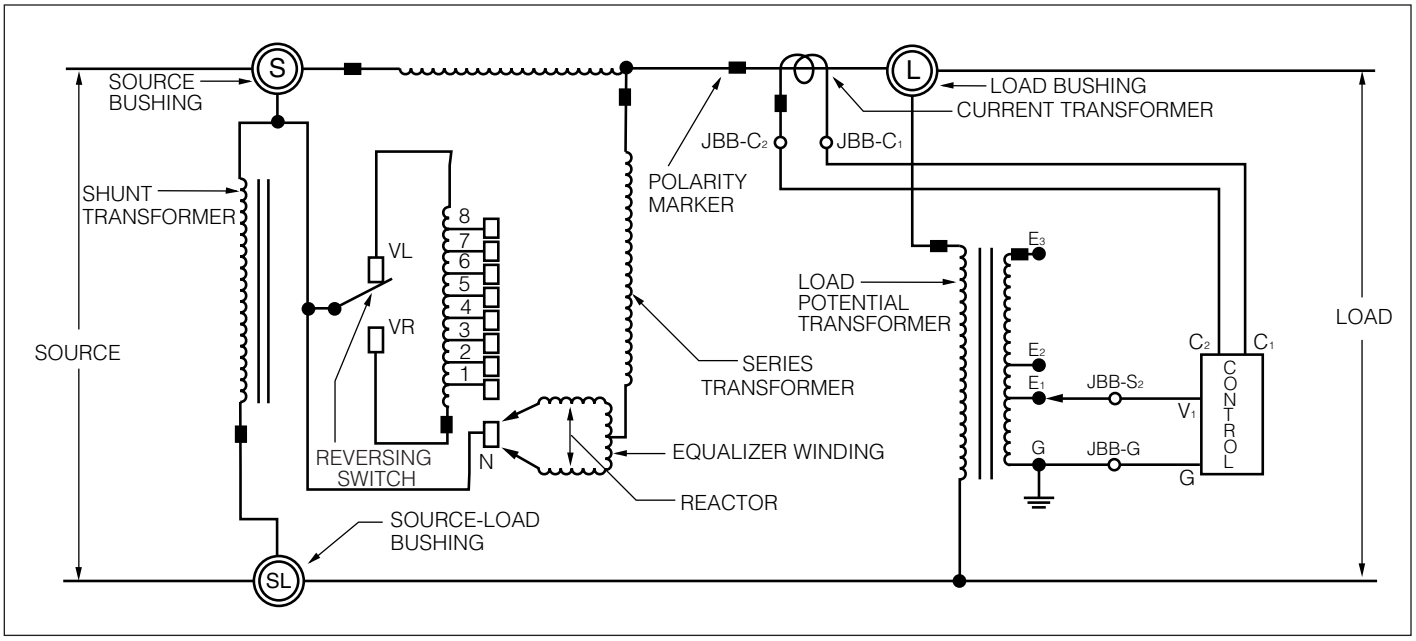

Figure 1-14.
Power circuit — series transformer

Voltage Circuits

All McGraw-Edison VR-32 regulators have provisions for operation at system voltages lower than the nameplate rating, as illustrated in Tables 1-10 and 1-11. This is accomplished by providing taps on the control winding or P.T. The taps are brought to a terminal board located on top of the tap changer assembly, under oil and are marked E_1, E_2, etc. (See Figure 1-15.) The connections are made with push-on terminals and are easily accessed through the handhole.

Regulators built prior to 1995 will have all the voltage terminal connections mounted on the top of the tap changer. Since the middle of 1995, the voltage connections will be as shown in figure 1-15.

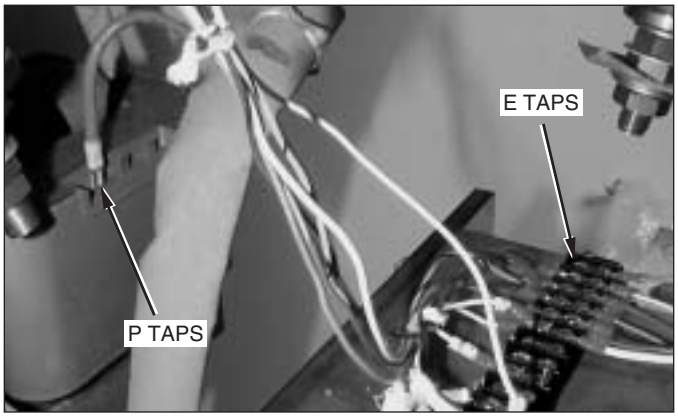

Figure 1-15.
Internal tap terminals

The tapped potential winding cannot always provide adjustment of the voltage fine enough for control or motor use. A tapped autotransformer is therefore used for fine voltage adjustment. This transformer, the Ratio Correcting Transformer (RCT_1), has input taps at 104, 110, 115, 120, 127, and 133 V. The output tap to the control and motor is set as 120 V. RCT_1 is located on the control back panel (see Figure 1-7, page 1-3). To operate a regulator on a system other than its rating, the appropriate selection must be made for the internal tap and RCT_1 tap, and the control must be programmed properly at Function Code 43 (System Line Voltage) and Function Code 44 (Overall P.T. Ratio). The nameplate provides these values for common system voltages (see Figure 1-8 on page 1-9).

This voltage supply is then brought from the tap changer terminal board to the junction box terminal board through the control cable, into the enclosure, terminating at the knife switch labeled V_1. Opening this knife switch provides a visible means of removing all power to the control and motor circuits. From the knife switch, the voltage is ratio corrected by RCT_1 as previously described. The motor circuit is routed directly to the control front panel and the sensing potential is brought back to the top terminal strip through a series of removable jumpers, and then to the front panel. This scheme allows for the complete interchangeability with all the prior CL-series controls and accompanying accessories.

If a regulator is purchased with the intent of using it in an area where reverse power flow is likely, the unit may

have a second voltage source installed internal to the regulator to develop the source-side voltage supply. (For the CL-5C and subsequent controls, reverse power flow may instead be handled using the source voltage calculator. See page 4-3, Reverse Power Operation.) A series winding (differential) P.T. is utilized for measuring the voltage across the series winding, which is then used, along with the existing control winding or separate control windings, to develop the source-side voltage. The series winding P.T. will have taps similar to the load side supplies. These high-voltage taps (see Figure 1-15) are located on the series winding P.T. and are marked P_1, P_2, etc. The secondary voltage of the series winding P.T. is brought directly to the knife switch labeled V_6, and then passes through RCT_2 for ratio correction (similar to that performed for V_1). The differential V_6 voltage, once corrected by RCT_2, is labeled V_7 and is then routed to the control front panel.

On the front panel, the three potentials (V_s, sensing voltage; V_7, differential voltage; V_m, motor voltage) are all brought directly to the power switch. Without a source side supply, the V_7 terminal is connected to the V_s terminal on the control back panel, and the control software then recognizes that the V_7 voltage is not present.)

The power switch has three positions: internal, off, and external. The internal position powers the control and motor from the regulator sensing winding, and the external position permits an external supply for the same purpose. When the power switch is in the external position, the internal supply is disconnected to prevent accidentally energizing the high voltage winding and bushings. The external source terminals are prominently located adjacent to the voltmeter test terminals.

The voltmeter terminals allow the monitoring of the voltage that is applied to the circuit board. This is the voltage output from RCT_1 and the voltage displayed at Function Code 47. During forward power flow, the voltage at these terminals is the output voltage. During reverse power flow the voltage at these terminals is the source voltage.

The three voltage circuits are routed from the power switch to the respective 6 A motor fuse, 2 A panel fuse, and 2 A differential voltage fuse. The differential voltage fuse is provided to protect the front panel if an external source P.T. is used. From the 6 A fuse, the motor potential provides power to the auto/manual selector switch, the drag hand reset solenoid, the neutral light, and the holding switch (alternate motor source) circuits. The sensing voltage and differential voltage are connected directly to their respective circuit board input terminals.

TABLE 1-10
VR-32 Tap Connections and Voltage Levels (60 Hz)

Regulator Voltage Rating	Nominal Single Phase Voltage	Ratio Adjusting Data			Test Terminal Voltage **	Overall Potential Ratio **
		Internal Tap*	PT Ratio	RCT Tap		
1	2	3	4	5	6	7
2500	2500	—	20:1	120	125	20:1
	2400	—	20:1	120	120	20:1
5000	5000	E_1/P_1	40:1	120	125	40:1
	4800	E_1/P_1	40:1	120	120	40:1
	4160	E_1/P_1	40:1	104	120	34.7:1
	2400	E_2/P_2	20:1	120	120	20:1
7620	8000	E_1/P_1	60:1	133	120.5	66.5:1
	7970	E_1/P_1	60:1	133	120	66.5:1
	7620	E_1/P_1	60:1	127	120	63.5:1
	7200	E_1/P_1	60:1	120	120	60:1
	6930	E_1/P_1	60:1	115	120.5	57.5:1
	4800	E_2/P_2	40:1	120	120	40:1
	4160	E_2/P_2	40:1	104	120	34.7:1
	2400	E_3/P_3	20:1	120	120	20:1
13800	13800	E_1/P_1	115:1	120	120	115:1
	13200	E_1/P_1	115:1	115	120	110.2:1
	12470	E_1/P_1	115:1	104	125	99.7:1
	12000	E_1/P_1	115:1	104	120	99.7:1
	7970	E_2/P_2	57.5:1	133	125	63.7:1
	7620	E_2/P_2	57.5:1	133	120	63.7:1
	7200	E_2/P_2	57.5:1	120	125	57.5:1
	6930	E_2/P_2	57.5:1	120	120.5	57.5:1
14400	14400	E_1/P_1	120:1	120	120	120:1
	13800	E_1/P_1	120:1	115	120	115:1
	13200	E_1/P_1	120:1	110	120	110:1
	12000	E_1/P_1	120:1	104	115.5	104:1
	7970	E_2/P_2	60:1	133	120	66.5:1
	7620	E_2/P_2	60:1	127	120	63.5:1
	7200	E_2/P_2	60:1	120	120	60:1
	6930	E_2/P_2	60:1	115	120.5	57.5:1
19920	19920	E_1/P_1	166:1	120	120	166:1
	17200	E_1/P_1	166:1	104	119.5	143.9:1
	16000	E_2/P_2	120:1	133	120.5	133:1
	15242	E_2/P_2	120:1	127	120	127:1
	14400	E_2/P_2	120:1	120	120	120:1
	7970	E_3/P_3	60:1	133	120	66.5:1
	7620	E_3/P_3	60:1	127	120	63.5:1
	7200	E_3/P_3	60:1	120	120	60:1

* P taps are used with E taps only on regulators where an internal potential transformer is used in conjunction with the control winding to provide voltage supplies to the control. See nameplate for verification of this type of control supply.

** Test terminal voltage and overall potential ratio may vary slightly from one regulator to another. See the regulator nameplate for determining the exact values.

TABLE 1-11
VR-32 Tap Connections and Voltage Levels (50 Hz)

Regulator Voltage Rating	Nominal Single Phase Voltage	Ratio Adjusting Data			Test Terminal Voltage **	Overall Potential Ratio **
		Internal Tap*	PT Ratio	RCT Tap		
1	2	3	4	5	6	7
6600	6930	—	55:1	127	119	58.2:1
	6600	—	55:1	120	120	55:1
	6350	—	55:1	115	120.5	52.7:1
	6000	—	55:1	110	119	50.4:1
	5500	—	55:1	104	115.5	47.7:1
11000	11600	E1/P1	91.7:1	127	119.5	97:1
	11000	E1/P1	91.7:1	120	120	91.7:1
	10000	E1/P1	91.7:1	110	119	84.1:1
	6930	E_2/P_2	55:1	127	119	58.2:1
	6600	E_2/P_2	55:1	120	120	55:1
	6350	E_2/P_2	55:1	115	120	52.7:1
	6000	E_2/P_2	55:1	110	119	50.4:1
	5500	E_2/P_2	55:1	104	115.5	47.7:1
15000	15000	E1/P1	120:1	120	125	120:1
	14400	E1/P1	120:1	120	120	120:1
	13800	E1/P1	120:1	115	120	115:1
	13200	E1/P1	120:1	110	120	110:1
	12000	E1/P1	120:1	104	115.5	104:1
	11000	E_2/P_2	92.3:1	120	119	92.3:1
	10000	E_2/P_2	92.3:1	110	118	84.6:1
	8660	E_3/P_3	72.9:1	120	119	72.9:1
22000	23000	E1/P1	183.3:1	120	125.5	183.3:1
	22000	E1/P1	183.3:1	120	120	183.3:1
	20000	E1/P1	183.3:1	110	119	168:1
	19100	E1/P1	183.3:1	104	120	159.2:1
	15000	E_2/P_2	119.8:1	120	125.5	119.8:1
	12700	E_2/P_2	119.8:1	104	122.5	103.9:1
	11000	E_3/P_3	91.6:1	120	120	91.6:1
	10000	E_3/P_3	91.6:1	110	119	84:1
33000	34500	E1/P1	275:1	127	118	291:1
	33000	E1/P1	275:1	120	120	275:1
	30000	E1/P1	275:1	110	119	252.1:1
	22000	E_2/P_2	183.3:1	120	120	183.3:1
	20000	E_2/P_2	183.3:1	110	119	168:1
	11600	E_3/P_3	91.7:1	127	119.5	97:1
	11000	E_3/P_3	91.7:1	120	120	91.7:1
	10000	E_3/P_3	91.7:1	110	119	84:1

*P taps are used with E taps only on regulators where an internal potential transformer is used in conjunction with the control winding to provide voltage supplies to the control. See nameplate for verification of this type of control supply.

**Test terminal voltage and overall potential ratio may vary slightly from one regulator to another. See the regulator nameplate for determining the exact values.

TABLE 1-12
RCT Ratios

RCT Input Tap	RCT Ratio
133	1.108
127	1.058
120	1.000
115	0.958
110	0.917
104	0.867

Allowable System Voltages

Calculation of Overall P.T. Ratio

If the system voltage is other than those listed on the nameplate, it can be determined whether there is sufficient ratio correction available from the control winding (internal P.T.) taps and the Ratio Correction Transformer (RCT) taps to allow the CL-5 Series control and motor to function properly. The general guideline is that the overall P.T. ratio is sufficient if the voltage delivered to the control for the nominal voltage conditions is in the range of 115-125 V.

To determine the voltage delivered to the control, use the following procedure:

1. Of the P.T. ratios shown on the nameplate choose the one which provides a voltage closest to 120V at the output of the internal P.T. (The output of the internal P.T. is the input to the RCT).
2. Calculate the voltage at the output of the internal P.T., and compare that to the RCT input taps of 133, 127, 120, 115, 110 and 104.
3. Choose the RCT tap closest to the RCT input voltage.
4. Given the RCT input tap use Table 1-12 to determine the RCT ratio.
5. Use the formula below to calculate the control input voltage.
6. Use the formula below to calculate the overall P.T. Ratio.

Control Input V = Internal P.T. Output V (RCT Ratio)
Overall P.T. Ratio = Internal P.T. Ratio x (RCT Ratio)

EXAMPLE: If a 60Hz, 14400 V regulator is to be used on a system with a nominal voltage of 12700, the following is determined:

1. 12700V / 120V=105.8. Choose 120:1 Control Winding Tap
2. Internal P.T. output voltage = 12700V / 120=105.8V
3. Best RCT input tap is 104
4. RCT ratio is 0.867
5. Control input V = 105.8/0.876 = 122V. This is within allowable range.
6. Overall P.T. ratio = 120 x .867 = 104:1

Changing System Voltage

WARNING: Remove regulator from service before performing internal lead connection changes.

To utilize a regulator at a system voltage other than the nominal voltage designated on the nameplate,

1. If required, change control winding tap (E1-E3) on the terminal strip (accessible through the handhole,) to the value indicated on the nameplate.
2. If the regulator contains an internal differential P.T., and if a change to the P.T. settings is required, make the changes on the P.T. (through the handhole.)
3. Move the Control Function switch to OFF.
4. Move the Power switch to OFF.
5. Remove the 6 amp motor fuse.
6. Open the V_1 (and V_6 if present) knife switches, on the control back panel.
7. If required, change the Ratio Correction Transformer tap (on the control back panel) to the value indicated on the nameplate.
8. Close The V_1 (and V_6 if present) knife switches, on the control back panel.
9. Replace the 6 amp motor fuse.
10. Move the Power switch to External or Internal, depending on how regulator control is energized.
11. Change Function Code 44 to the new overall P.T. Ratio.
12. Change Function Code 43 to new system voltage.
13. Move the Control Function switch to AUTO/ REMOTE.

Current Circuit

All VR-32 regulators are designed with an internal current transformer to provide a current source for the line drop compensation calculations and for metering functions. Table 1-9, page 1-17 provides the application information for the various C.T.s used on the McGraw-Edison regulators. These C.T.s provide 200 mA output for the rated C.T. primary current.

The current developed by the C.T. is brought to the terminal board inside the junction box, through the control cable, into the enclosure, terminating at the knife switch labeled C. **Closing the knife switch provides a visible means of shorting the C.T.**, thus allowing the operator to work safely on the current circuitry. (For additional safety measures, the V_1 and V_6 knife switches should also be opened.) For all regulators with quick disconnect, connector (Figure 1-9), an automatic solid-state C.T. shorting device is located in the junction box. This solid-state device automatically will short the C.T. when the cable is disconnected.

Figure 1-16.
Internal bushing mounted current transformer

At this knife switch, one side of the C.T. is connected to the equipment ground, and is also routed to the front panel for termination on the circuit board. The “high” side of the current circuit is brought to the top terminal board through two removable jumpers and then to the front panel for connection to the circuit board. Once this current signal is delivered to the circuit board, it is transformed into a voltage signal and converted into a digital format for processing.

Motor Circuit

The motor circuit power is brought from the 6 A fuse to the circuit board through a set of back-to-back diodes to the control (auto/manual) switch. When this switch is set for automatic operation, motor power is applied to the relays. An appropriate relay closure then applies this power to the tap changer motor, after first passing through the limit switch contacts in the position indicator. When the switch is set for manual operation, the power is transferred to the momentary toggle switch labeled raise-lower. By actuating this switch in one direction or the other, power is applied through the limit switch contacts, directly to the tap changer motor, completely bypassing the circuit board.

Also included as a part of the motor circuit is an alternate feed to the motor called the holding switch circuit. Located on the tap changer is a switch or switches, which operate off of the tap changing mechanism. Motor rotation causes switch closure (one direction or the other) and establishes a complete circuit for motor current until the rotation is complete and the cam drops out. During the time the holding switch is closed, motor current is drawn through an input on the circuit board which permits the control to detect that a tap change is in process. The microprocessor uses this information in its decision making process, as described under Control Operating Modes, page 2-8.

Two other unassociated circuits which share the 6 A motor source are the drag hand reset and neutral light circuits. The drag hand reset function is accomplished simply by operating a momentary toggle switch which applies power to the reset solenoid in the position indicator. The neutral light is energized from a neutral light switch (located on the tap changer) when in the neutral tap position.

Control Basics

Introduction

The CL-5 Series Control

The McGraw-Edison CL-5 series control is a full-featured control which incorporates digital logic and microprocessor technology. A keypad is used to simplify the setup of the basic control and its many built-in accessory features. An LCD (liquid crystal display) screen displays the control settings, accessory settings, metering values and annunciator words.

Standard features of the control are:

- Line Drop Compensation
- Voltage Limiting
- Voltage Reduction (Local and Remote)
- Reverse Power Flow Operation
- Metering
- Data Port
- CE Mark Compliant

Advanced features of the control are:

- Source Voltage Calculation (CL-5C and later only)
- Calendar/Clock
- Time-Tagged Min/Max Demand Metering
- Metering Profile Recorder
- Total Harmonic Distortion and odd harmonic voltages and currents up to the 13th
- Tap Position Indication
- Pulse Voltage Reduction Mode
- Security Override
- Supervisory On/Off Switch
- Resident Communications Protocol (DATA 2179)
- Tap to Neutral*
- Enhanced Operation Counter*
- SOFT ADD-AMP Limits*

  * CL-5E only

The demand metering values and control settings are stored in EEPROM memory to prevent their loss during a power outage. Information stored in the EEPROM will be retained indefinitely, with or without power applied.

To fully capitalize on the microprocessor capabilities, a 12-bit analog-to-digital converter is used in the front end of the design to convert the analog voltage and current waveforms into digital signals. A digital signal processing technique, called Discrete Fourier Analysis, is then performed on this data. This permits extremely accurate resolution of both the voltage and current input signals. It is this technique which enables the control to do harmonic analysis (to the 13th harmonic frequency), as well as measurements for metering and control.

TABLE 2-1
Control Specifications

A.	Physical Size	17 ½" H 10 ¼" W 2 ½" D (44.5 cm 26.0 cm 6.35 cm)
B.	Weight	11 ½ lbs. (5.2 kg)
C.	Burden @ 120 V	4 VA
D.	Operating Temperature Range	-40° C to +85° C
E.	Control System Accuracy	±1%
F.	Metering Accuracy Voltage Inputs (2) Output Voltage and Differential/Source Voltage 80-137 V ac, 45 to 65 Hz with error not to exceed 0.5%*† of the reading under all conditions. The control will withstand up to 137 V without damage or loss of calibration. Current Input 0-0.400 A ac 45 to 65 Hz with error not to exceed 0.6% (0.0012 A)* of the nominal full load current (0.200 A), under all conditions. The control will withstand the short-circuit rating of the regulator without damage or loss of calibration. Calculated Values - kVA, kW, kvar 0-9999, with error not to exceed 1%* under all conditions. Harmonic Analysis - Current and Voltage Harmonics 3, 5, 7, 9, 11, 13th harmonic frequencies and THD, with error not to exceed 5%* under all conditions.	

*Basic accuracy of the device, excluding P.T. and C.T. errors
†0.5% on 120 volt base; (0.5%) (120)=0.6 volts

All control setting values, instantaneous and demand metering values, tap position values and diagnostic values can be displayed on the LCD screen. (Some reverse power flow operation modes and metering require source side voltage, from either an optional differential potential transformer or the source voltage calculator in the control [CL5C and later.])

The entire control data base (all Function Codes) may be copied through the control Data Port to an optional McGraw-Edison Data Reader for transfer to a personal computer, or be copied directly to a personal computer.

The control can communicate digitally with a SCADA system.

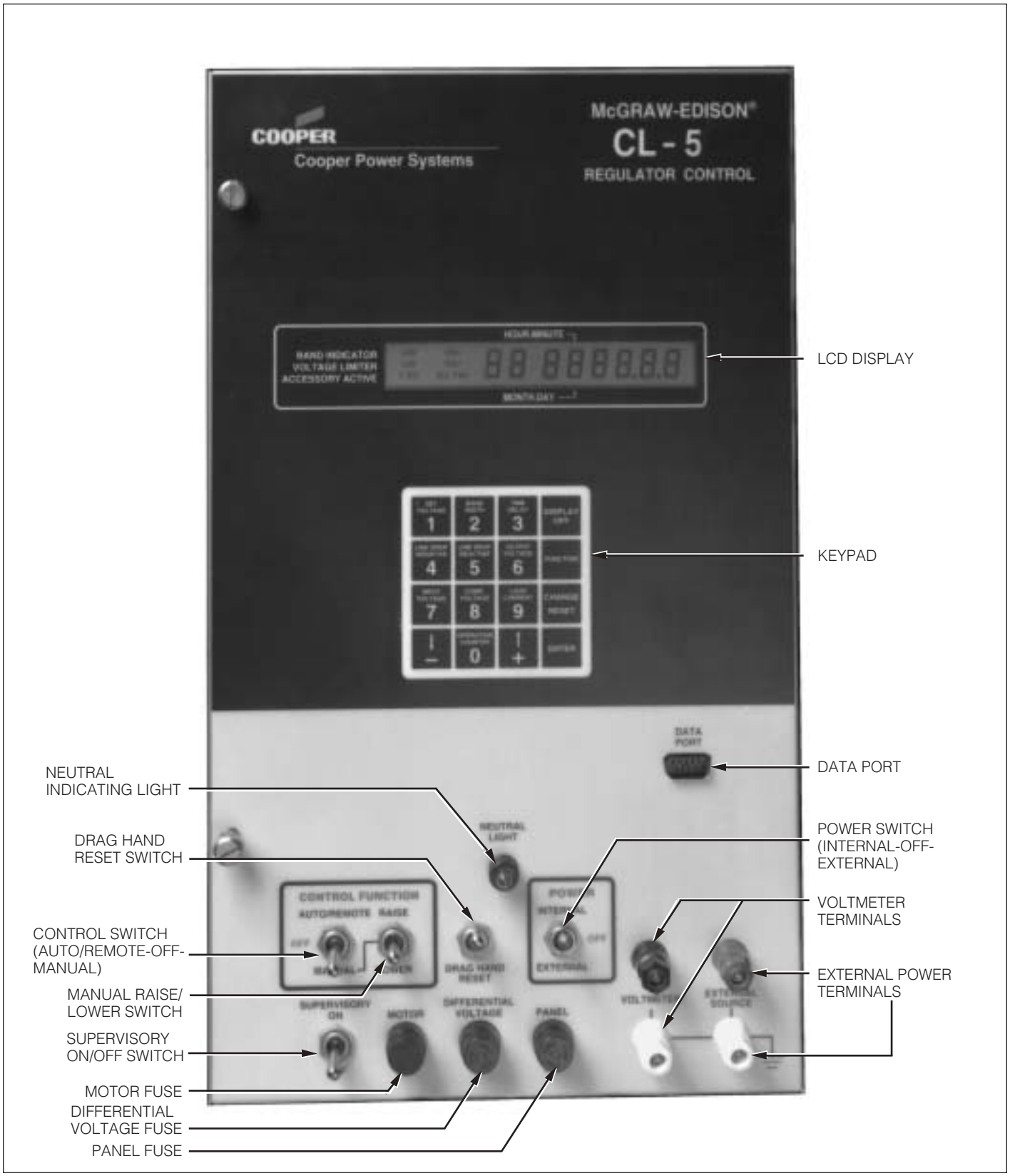

Figure 2-1.
CL-5 series control front panel

Front Panel Components

Lower Section - Grey

The lower section of the control contains components which are similar to the other controls in the McGraw-Edison CL series.

Power Switch

In the external position, the control and tap changer motor are powered from an external 120 V ac source connected to the external source terminals. In the internal position, the control and motor get power from the regulator. In the off position, no power is delivered to either the control or the motor.

External Power Terminals

Providing 120 V ac to these terminals powers the control and tap changer motor. See page 1-3 for cautionary note. Controls wired for an external source of 220-240 V ac have a “240” decal at the terminals.

Control Switch

In the auto/remote position, the tap changer motor can be controlled by either the front panel (auto) or remotely by SCADA. In the off and manual positions, automatic operation and analog-type remote motor control are inhibited. In the manual position, automatic operation and analog-type remote motor control are inhibited and the tap changer may be raised or lowered locally by momentarily depressing the raise/lower switch.

Manual (Raise/Lower) Switch

This switch allows the operator to manually raise or lower the tap changer motor.

Supervisory Switch

This switch is used for digital communications only. When in the on position, SCADA has full capabilities. When in the off position, SCADA may only read the control database. See DIGITAL SCADA, page 4-11.

Draghand Reset Switch

This switch operates a solenoid in the Position Indicator to move the draghands to the present position of the main hand.

Neutral Light

This is the primary indication that the tap changer is in the neutral position. See Determining Neutral Position, page 1-11.

Voltmeter Terminals

These allow the connection of a voltmeter so that the potential sensed by the control (between the load (L) bushing and SL bushing of the regulator) can be measured.

Fuses

The motor fuse is a 6.25 A slow-blow fuse. The 2 A panel fuse protects the control panel circuit. The 2 A differential voltage fuse protects the circuit from mis-wiring of an external PT.

Data Port

This was first introduced on the CL-4 control. It allows the temporary connection of a McGraw-Edison Data Reader or personal computer. See Data Retrieval and Settings Uploading, page 4-12.

Upper Section - Black

The man-machine interface chosen for the CL-5 Series control is a 16-key touchpad and a liquid crystal display (LCD).

The keypad, with a layout similar to a touch-tone telephone, has a snap-action response. (See Figure 2-2.)

The special, low-temperature LCD was chosen to be easily visible in direct sunlight. (See Figure 2-3 for a diagram of the LCD with all of the segments on.)

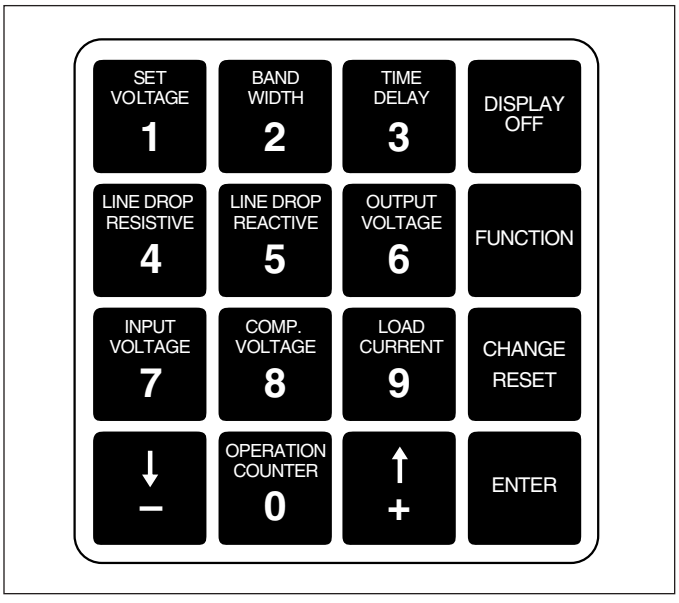

Figure 2-2.
Keypad

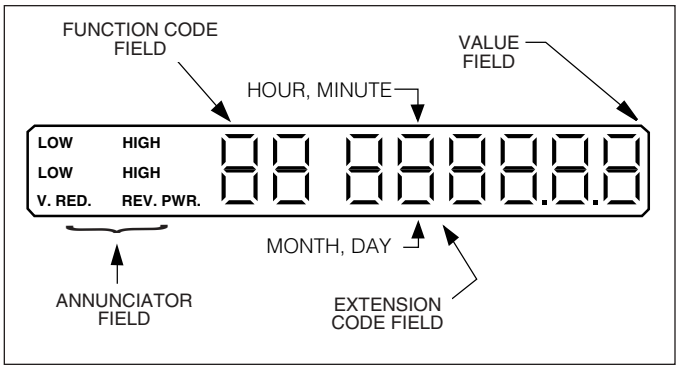

Figure 2-3.
Display fields

Control Operation

In the automatic mode of operation, the power switch will be set on internal, and the control switch will be placed on auto. The regulator is assumed energized from the primary circuit. If the sequential mode of operation is selected (the standard mode), the control response is as follows:

1. As the primary voltage moves to a level which represents an out-of-band condition, the sensing voltage will correspondingly reflect the same results on the 120 V base. Assuming the voltage dropped low, a lower than nominal signal will appear at the printed circuit board input, terminals P_5-4 to P_5-3.
2. The signal is transformed and converted into a digital format for use by the microprocessor.
3. The microprocessor, recognizing the voltage condition as low and out-of-band, issues an output which activates the LOW band indicator in the display, and starts an internal timer which is equivalent to the time delay setting.
4. During the time-out period, the voltage is continually sensed and sampled. Should the voltage momentarily move into band, the low band indicator is deactivated and the timer is reset.
5. At the end of the time delay period, the microprocessor issues an output which causes the RAISE relay coil to be energized.
6. The tap changer motor begins to turn as a result of the relay closure, and a cam on the tap changer closes the RAISE holding switch. This now provides an alternate source for the motor current, which passes through the input terminals P_4-9 and P_4-11 on the circuit board.
7. The microprocessor now recognizes that current is flowing in the holding switch circuit; the operations counter and tap position indication are incremented, and the RAISE relay is de-energized, thus opening its contacts.
8. As a result of the relay contacts opening, the motor current is now carried solely by the holding switch circuit. When the motor rotation is complete, the holding switch opens as a result of the cam action, and the motor stops.
9. The microprocessor recognizes that the tap change is now complete by detecting that motor current is no longer flowing through input terminals P_4-9 and P_4-11. A 2-second pause then occurs, allowing the sensing voltage to stabilize from the motor operation.
10. At the end of this pause, if the voltage is still out-of-band, another output is issued to close the RAISE relay, thus starting another tap change sequence (step 6). If the voltage is in-band, the LOW band indicator is turned off, and the time delay timer is reset. At all times, the microprocessor is sampling the sensing voltage for a change of conditions.

This sequence is altered slightly if the voltage averaging or time integrating mode of operation is selected. These characteristics are described in Control Operating Modes, starting on page 2-8.

Manual Operation

In the manual mode of operation, the power switch can be set on either internal or external and the control switch will be placed on manual. If the external position is chosen, an external source must be applied through the terminals on the front panel. This should be a nominal 120 V ac source (or other ac voltage as indicated by a decal) and should not be a direct current (dc) to alternating current (ac) inverter.

Operation of the momentary toggle raise-lower switch applies power through the position indicator limit switch contacts directly to the tap changer motor. As the tap changer motor cam rotates, the holding switch is closed, as described in the preceding section, step 6. This holding switch current is sensed by the circuit board, and the operations counter and tap position indicator are appropriately incremented (Function Code 0).

Tap changes will continue to occur as long as the raise-lower switch is closed and the ADD-AMP limit switch is not opened.

System Protection

All control inputs (15) are protected with metal oxide varistors (MOVs) and capacitors to prevent damage from line surges and high-frequency transients. This protection concept has proven very effective in the surge tests conducted by Cooper Power Systems. Provisions

have also been made in the design to further enhance the control operation under adverse conditions. Orderly operation is ensured by MERTOS4, an operating system developed by Cooper Power Systems for microprocessor-based systems. There are four error detection firmware activities, overseen by MERTOS4, which are an inherent part of the normal operation:

1. The microprocessor architecture includes a COP (Computer Operating Properly) watchdog system to protect against firmware failures. A watchdog reset sequence is executed on a periodic basis so that the watchdog timer is never allowed to time out. Should the firmware malfunction, the reset sequence will not be generated, and the COP will time out, causing the system to enter a diagnostic routine.
2. MERTOS4 continually polls the various firmware tasks to ensure that they are performing correctly. If an abnormality is encountered, MERTOS4 will cause the system to enter a diagnostic routine.
3. Throughout the unused memory space, commands are embedded which generate a system reset if executed. Should an event occur which causes the processor to run errantly into unused memory space, the system will immediately be directed to a diagnostic routine.
4. Settings programmed into the control are stored in non-volatile memory in triplicate. A voting scheme is used as each parameter is accessed. If one of the three values does not match, the "different" value will be corrected to agree with the other two. This will also be counted as an EEPROM correction and the "Number of EEPROM Corrections" (Function Code 93) will be increased by 1.

   If all three values are different, a "default" value (one that is chosen as a representative value programmed into ROM), will be used for that particular parameter. If a setting parameter defaults, the "Number of Defaults" (Function Code 90) will be increased by 1. Additionally, when interrogated, the parameter(s) that defaulted will display a "d" preceding the value to indicate it is a default. The control will continue to operate using the default value(s).

Three parameters cannot default to a predetermined value because no logical choice is possible. The three parameters, regulator configuration (Function Code 41), system line voltage (Function Code 43), and overall P.T. ratio (Function Code 44) will revert to an invalid status and will display dashes preceded by a "d". Anything dependent upon these values will cease to function, and Function 95 will display a "6" to represent invalid critical parameters.

Diagnostics

There are three events which force the control into the self-diagnostic routines: 1) The power is first turned on; 2) operator entry of the self-test mode (Function Code 91); or 3) MERTOS4 detects a firmware problem. Once the diagnostic routines are entered, the first action taken by the control is to light all segments of the LCD display for approximately six seconds. This provides the operator an opportunity to observe the display for defective segments. Activities are performed as follows:

1. Non-volatile memory is checked to ensure all locations can be written to and erased;
2. The frequency detection circuitry is checked to verify a signal frequency between 45 and 65 Hz is being sampled;
3. The interrupt line to the processor is checked to verify that it is functional;
4. The multiplexor and analog-to-digital converter are checked to verify operation;
5. Critical parameters are checked to ensure validity;
6. The input/differential voltage channel is checked for the presence of a signal;
7. The output voltage channel is checked for the presence of a signal.

The duration of this test sequence is approximately three seconds. At completion, the display will indicate PASS or FAIL, depending upon the test results. The PASS message will remain in the display until the operator makes an entry through the keypad, or 30 minutes if no keypad entry is made. After 30 minutes, the display will automatically be turned off. The PASS message will be preceded by dashes (----) if the internal calendar/clock requires resetting. If, after 30 minutes, no keys have been pressed, the display will be formatted showing four dashes (----) only if the calendar/clock requires resetting. The clock will maintain timekeeping for 24 hours after loss of ac power to control. The backup power source requires 65 hours operation on ac power to become fully charged.

"Soft" failures are those listed under Function Code 95, System Status Code. Keypad entry is allowed, but automatic operation is inhibited for the following System Status Codes: 3, 4, 5, 6 and 8. Automatic operation is resumed as soon as the problem condition is removed. If status code is 10, see tap position indication, page 4-3.

For a "hard" failure, such as a RAM malfunction, the control will not operate. For hard failures the FAIL message remains in the display for approximately 15 minutes, then the diagnostic routines are executed again. The control will attempt to overcome the problem

TABLE 2-2
Security Codes

Security Level	Accessible at Function Code	Factory Programmed Code	User Definable Range	Functions Available at the Active Code
0	No Code Required	No Code Required	No Code Required	Read all parameters except security (Function Codes 96, 97, & 98).
1	96	1234	1-9999	Read all parameters as described above, and reset all demand metering and tap position maximum and minimum values and date/times.
2	97	12121	10000-19999	Read all parameters as described above, reset all demand meter and tap position maximum and minimum values and date/times, and change any operational or setup parameter.
3	98	32123	20000-32766	Read, reset or change any parameter.

that disabled it by going through this process continually until it receives operator attention. Keypad entry is denied during a hard failure.

NOTE: The word ERROR on the LCD indicates a key entry error, not a diagnostic failure. See Table 9-2, page 9-2 for a listing of the error codes.

Security System

The security (password) system implemented on the control is structured into four (4) levels. This permits selective access to the various parameters as dictated by the active security level. Most Function Codes may be read (accessed) at level 0, the base (unsecured) level. The security level required to change or reset each parameter is listed in Table 3-1, page 3-1. The security access codes for levels 1, 2 and 3 have been programmed into the control at the factory. These codes may be changed by the user according to Table 2-2. Access into the system is accomplished by entering the appropriate security code at Function Code 99.

The user has the option of overriding (inhibiting) one or more levels of security by choosing the appropriate Security Override Code at Function Code 92. Choices at Function 92 are 0 = standard security mode (no override); 1 = override level 1; 2 = override levels 2 and 1, and 3 = override levels 3, 2 and 1.

The values of the three security codes, Function Codes 96, 97 and 98, may be read only at level 3. If the level 3 code has been changed and forgotten, it may be retrieved with the McGraw-Edison Data Reader or with a personal computer using the Cooper Control Interface (CCI) CL-4/CL-5 Interface program.

Working with the Control

Function Codes

All of the parameters of the control — settings, metering values, etc., have been assigned a number. This number is called the Function Code of the parameter. To read the value of a parameter — that is, to display the parameter on the LCD — the operator accesses the appropriate Function Code. The value appears on the LCD, right-justified, with decimal point shown as necessary. See Table 3-1, page 3-1 for a list of the Function Codes grouped by subject.

Accessing Function Codes

All parameters, except for the Profiler data, can be read at the LCD by accessing its Function Code by one of the following methods:

One-touch Method

Access Function Codes 0-9 directly by pressing keys 0-9. The parameter printed on these keys is the same as the Function Code number. EXAMPLE: Function Code 1 = Set Voltage. Via the one-touch method, the operator may quickly read the Operations Counter (0), the five basic control settings (1-5), and the four most important instantaneous metering values (6-9).

Scroll Method

Use the scrolls keys — the upward- and downward-pointing arrows — to scroll up or down through the Functions Codes. In addition to the main Function Codes, there are Function Code Extensions. For

instance, the extensions of Function Code 18, are 3, 5, 7, 9, 11 and 13. When Function Code 18 is accessed the Total Harmonic Distortion (THD) is displayed. When one scrolls up from THD, the extension number 3 is displayed just to the right of the Function Code 18, denoting that the value displayed to the far right is the 3rd harmonic. Function code extensions may only be accessed by scrolling.

Function Key Method

One may scroll to Function Codes numbered higher than 9, but a more convenient method is to do the following: Press the FUNCTION key, key in the Function Code number, and press the ENTER key. EXAMPLE: To access Function Code 18: Press FUNCTION, 1, 8, ENTER. The Function Code and its value will be displayed.

For security, certain parameters may only be accessed by the function key method. They are as follows:

- 38 - Master Metering & Tap Position Reset
- 47 - Voltage Calibration
- 48 - Current Calibration
- 89 - Software Version Number
- 91 - Self Test
- 99 - Enter Security Code

LCD Annunciator

The left third of the LCD is the Annunciator field. The operator is advised of the present status of operations by words which appear in this field. While Function Codes and their values are dropped from the LCD 30 minutes after the last keypad activity, the annunciator field is always active.

On the band indicator line, LOW or HIGH indicate an out-of-band condition. (See Control Operating Modes, page 2-8 for details.) On the voltage limiter line LOW or HIGH indicate that the voltage limiter is operating. (See page 4-8.) On the accessory active line V. RED. indicates that voltage reduction is active. (See page 4-9.) Also on that line, REV. PWR. indicates that the regulator is currently experiencing a reverse power condition, except when Function Code 56 is set to zero, Locked Forward. (See Reverse Power Flow Operation, page 4-3)

To display all of the segments of the LCD; if the control is off, turn on; or if the control is on, access Self Test, Function Code 91.

Basic Control Operations

Set Voltage

The set voltage is the voltage level to which the control will regulate, on the 120 V base. Since the control performs ratio correction in software, this value will normally be set for 120.0 V unless it is desired to operate at a voltage level higher or lower than nominal. For proper operation, the ratio correcting transformer located on the control back panel must also be set for the correct tap as shown by the regulator nameplate.

Bandwidth

The bandwidth is defined as that total voltage range, around the voltage setting, which the control will consider as a satisfied condition. As an example, a 2 V bandwidth on a 120 V setting means the operational timer will not activate until the voltage is below 119 V or above 121 V. When the voltage is in-band, the band edge indicators are off, and the timer (time delay) is off, so no relay closure can occur. Selection of a small bandwidth will cause more tap changes to occur, but will provide a more “tightly” regulated line. Conversely, a larger bandwidth results in fewer tap changes, but at the expense of better regulation. Selection of the bandwidth and time delay settings should be made recognizing the interdependence of these two parameters.

Time Delay

The time delay is the period of time (in seconds) that the control waits, from the time when the voltage first goes out-of-band, to the time when relay closure occurs. If a rapid response is required, a smaller setting should be used. If several devices on the same line are to be coordinated (cascaded), different time delay settings will be required to allow the proper devices to operate in the desired sequence. Proceeding from the source, each device should have a longer time delay than the preceding device. We recommend a minimum 15 second difference between regulators located on the same phase on the same feeder. The delay allows the upstream device to perform its operations prior to the downstream device reacting. The time delay setting of a voltage-minimizing activated capacitor control should be set the same as a regulator control. Alternate time delays are available with the voltage limiting feature, page 4-8.

Line Compensation, Resistance and Reactance Settings

Quite often regulators are installed some distance from the theoretical load center (the location at which the voltage is to be regulated). This means the load will not be served at the desired voltage level due to the losses (voltage drop) on the line between the regulator and the load. Furthermore, as the load increases, line losses also increase, causing the lowest voltage condition to occur during the time of heaviest loading.

To provide the regulator with the capability to regulate at a “projected” load center, manufacturers incorporate line drop compensation elements in the controls. This circuitry usually consists of a current source (C.T.) which

produces a current proportional to the load current, and resistive (R) and reactive (X) elements through which this current flows. As the load increases, the resulting C.T. current flowing through these elements produces voltage drops which simulate the voltage drops on the primary line.

For the control, the input current is sampled and is used in a computer algorithm which calculates the respective resistive and reactive voltage drops based upon the line drop compensation values, programmed into the control at Function Codes 4 and 5 (or Function Codes 54 and 55 for reverse power flow conditions). This is by far a more accurate and economical means of developing the compensated voltage.

To select the proper R and X values, the user must know several factors about the line being regulated. See reference document R225-10-1 for assistance in this determination.

Regulator Configuration

The control is designed to operate on wye (star) - connected and delta-connected regulators. Regulators connected line-to-ground (wye) develop potentials and currents suitable for direct implementation in the control. Regulators connected line-to-line (delta) develop a potential-to-current phase shift which is dependent upon whether the regulator is defined as leading or lagging. The phase shift must be known by the control to permit accurate calculations for correct operation. This is accomplished by entering the proper code: 0 = Wye, 1 = Delta Lagging, 2 = Delta Leading.

See page 1-7 for an explanation of how to determine whether the regulator is leading or lagging.

Control Operating Modes

Cooper Power Systems is the only manufacturer that offers a selection of three modes in which the control responds to out-of-band conditions. This permits the user to select the mode that best fits the application. These modes and their corresponding codes are: 0 = Sequential, 1 = Time Integrating, 2 = Voltage Averaging.

Sequential

This is the standard mode of response, incorporated on all McGraw-Edison CL-5 Series regulator controls. When the load voltage goes out-of-band, the time delay circuit is activated. At the end of the time-out, a tap change is initiated. After each tap change, a 2-second pause occurs to permit the control to sample the voltage again. This sequence continues until the voltage is brought into band, at which time the timing circuit is reset. Any time the voltage goes in-band, the timer is reset.

Time Integrating

When the load voltage goes out-of-band, the time delay circuit is activated. At the end of the time-out, a tap change is initiated. After each tap change, a 2-second pause occurs to permit the control to sample the voltage again. If the voltage is still out-of-band, another tap change is performed. This sequence continues until the voltage is brought into band. When the voltage goes in-band, the timer is decremented at the rate of 1.1 seconds for every second elapsed, until it reaches zero.

Voltage Averaging

When the load voltage goes out-of-band, the time delay circuit is activated. During this time delay period, the microprocessor monitors and averages the instantaneous load voltage. It then computes the number of tap changes required to bring the average voltage back to the set voltage level. When the time delay period is complete, the computed number of tap changes are performed without any delay between them, up to a maximum of 5 consecutive tap changes, to avoid an accumulative error. The timer is not reset on voltage excursions in-band unless the voltage stays in-band for at least 10 continuous seconds. An error-averaging characteristic is inherent with the voltage averaging mode.

NOTE: To permit sufficient time for the microprocessor to average the voltage, the time delay period must be 30 seconds or longer. If the time delay is set for less than 30 seconds, the control ignores the setting and uses 30 seconds.

System Line Voltage

The control performs ratio correction in software, and, consequently, the primary voltage must be entered for the control to perform this calculation. This value is simply the nominal single phase voltage supplied across the L and SL terminals. Regulators shipped from the factory are set for the voltage indicated by the pin on the nameplate, and this value is programmed into the control. If the regulator is installed on any other system voltage, this system voltage must be entered for proper operation. See page 1-19, Voltage Circuits, for other changes required.

Potential Transformer Ratio

Since the control performs ratio correction in software, the P.T. ratio for the voltage sensing supply must be entered for the control to perform this calculation. The ratio to be programmed in the control is the OVERALL P.T. RATIO, as shown on the regulator nameplate for every applicable system voltage for the particular regulator. The P.T. ratio which corresponds to the regulator rated voltage is set by the factory. If the

regulator is installed on any other system voltage, the corresponding P.T. ratio must also be entered for proper operation. This value includes the correction performed by the ratio correcting transformer (RCT) on the control back panel. The voltage from the RCT is normally corrected to 120 V. However, in the instance in which this voltage is other than 120 V, the control will define the particular input voltage as the 120 V base voltage, and 120 V will be displayed at Function Code 6. The voltage test terminals will continue to show the voltage as applied to the control from the RCT.

Current Transformer Primary Rating

The control is designed for 200 mA (full scale) as the rated C.T. current, and will meter to 400 mA (200% load) with no loss of accuracy. Ratio correction is performed by the software, and consequently, the C.T. primary rating must be entered. The C.T. primary rating is available on the regulator nameplate. EXAMPLE: If a C.T. ratio of 400/0.2 is indicated on the nameplate, then 400 must be entered at Function Code 45. (See Table 1-9, page 1-17 for standard ratings.)

Delta-connected (Line-to-line-connected) Regulators

When a regulator is connected line-to-line, the phase angle of the line current is 30° displaced from the voltage impressed across the regulator. By setting the Regulator Configuration, FC 41, correctly, the correct relationship between the voltage and current is established. (See page 1-7.) By setting the Regulator Configuration to the incorrect delta value (lagging instead of leading, or vice versa), the phase angle will be in error 60°. Below are considerations concerning delta-connected regulators:

1. The basic decision-making of the control when line drop compensation is not used is not affected by the phase angle, therefore operation will be correct even if FC 41 is set to either of the two incorrect values. This is true for forward and reverse operation.
2. If line drop compensation is used, the scaling of the R and X values and the positive/negative sign of these values is controlled by FC 41, therefore, it is important to correctly set FC 41.
3. The following metering parameters will be correct only if the Regulator Configuration is correctly set: power factor, kVA, kW, kvar, demand kVA, demand kW and demand kvar.
4. Note that the kVA, kW, kvar, demand kVA, demand kW and demand kvar use the line-to-line voltage, therefore they display the value at the regulator, not on one feeder. To determine the total three-phase value of any one of these parameters, each regulator value must be divided by 1.732 before adding the three together.

Control Function Codes

TABLE 3-1
CL-5 Series Regulator Control Function Codes

Function Code	Function	Security Level Change/Reset
FORWARD CONTROL SETTINGS		
0	Operation Counter (Q, R_, R¯, 1, 2, 3, 4, 5, 6)*	3*
1	Set Voltage	2
2	Bandwidth, volts	2
3	Time Delay, seconds	2
4	Line Compensation Resistance, volts	2
5	Line Compensation Reactance, volts	2
INSTANTANEOUS METERING		
6	Load Voltage, Secondary	
7	Source Voltage, Secondary	
8	Compensated Voltage, Secondary	
9	Load Current, Primary, amperes	
10	Load Voltage, Primary, kV	
11	Source Voltage, Primary, kV	
12	Tap Position & Percent Regulation (TP, %)	3
13	Power Factor	
14	kVA Load	
15	kW Load	
16	kvar Load	
17	Line Frequency	
18	Voltage Harmonics (THD, 3, 5, 7, 9, 11, 13), percent	
19	Current Harmonics (THD, 3, 5, 7, 9, 11, 13), percent	
FORWARD DEMAND METERING		
20	Load Voltage (H-D, T; L-D, T; P)	1
21	Compensated Voltage (H-D, T; L-D, T, P)	1
22	Load Current (H-D, T; L-D, T; P), amperes	1
23H	Power Factor @ Max kVA Demand	
23L	Power Factor @ Min kVA Demand	
24	kVA Load (H-D, T; L-D, T; P)	1
25	kW Load (H-D, T; L-D, T; P)	1
26	kvar Load (H-D, T; L-D, T; P)	1
27	Max Tap Pos & Max % Boost (TP-D, T; %)	1
28	Min Tap Pos & Max % Buck (TP-D, T; %)	1
29	Source Voltage **(H-D, T; L-D, T; P)	
REVERSE DEMAND METERING		
30	Load Voltage (H-D, T; L-D, T; P)	1
31	Compensated Voltage (H-D, T; L-D, T; P)	1
32	Load Current (H-D, T; L-D, T; P), amperes	1
33H	Power Factor @ Max kVA Demand	
33L	Power Factor @ Min kVA Demand	
34	kVA Load (H-D, T; L-D, T; P)	1
35	kW Load (H-D, T; L-D, T; P)	1
36	kvar Load (H-D, T; L-D, T; P)	1
37	Source Voltage**(H-D, T; L-D, T; P)	
MASTER METERING & TAP POSITION INDICATION RESET		
38	Reset	1
CONFIGURATION		
39	Source Voltage Calculation 0 = Off, 1 = On; 1 = Type A, 2 = Type B	2
40	Regulator Identification	2
41	Regulator Configuration 0 = Wye, 1 = Delta Lag, 2 = Delta Lead	2
42	Control Operating Modes 0 = Sequential, 1 = Time Integrating, 2 = Voltage Averaging	2
43	System Line Voltage, volts	2
44	Overall P.T. Ratio	2
45	C.T. Primary Rating, amps	2
46	Demand Time Interval, minutes	2
49	Tap Changer Selection 0 = Quik Drive, 1 = Spring/Direct Drive	
CALIBRATION		
47	Voltage Calibration, volts	3
48	Current Calibration, amps	3
CALENDAR/CLOCK		
50	Date & Time Set (D, T, 1, 2, 3, 4, 5, 6) 1 = Year, 2 = Month, 3 = Day, 4 = Hour, 5 = Minute, 6 = Second	3
REVERSE CONTROL SETTINGS		
51	Set Voltage, volts	2
52	Bandwidth, volts	2
53	Time Delay, seconds	2
54	Line Compensation, Resistance, volts	2
55	Line Compensation, Reactance, volts	2
56	Reverse Sensing Mode 0 = Locked Forward, 1 = Locked Reverse 2 = Reverse Idle, 3 = Bi-Directional 4 = Neutral Idle, 5 = Co-Generation 6 = Reactive Bi-directional	2
57	Reverse Threshold %	2
COMMUNICATIONS		
60	Channel 1 (Data Port) Baud Rate	2
61	Control Communication Protocol XX.03 = Data 2179	
62	Channel 1 (Data Port) Status	
63	Channel 2 (Comm Port) Status	
64	Control Communications Address	2
65	Channel 2 (Comm Port) Baud Rate	2
66	Comm Port Handshake Mode	2
67	Comm Port Resynch Time Chars.	2
68	Comm Port Transmit Enable Delay (On, Off)	2
69	Blocking Status 0 = Normal, 1 = Blocked	2
VOLTAGE REDUCTION		
70	Voltage Reduction Mode 0 = Off, 1=Local/Digital Remote, 2 = Analog Remote (Latching), 3 = Pulse 10 = Off, 11 = Local/Digital Remote, 12 = Analog Remote (Latching), 13 = Pulse (Utilizing 10-13 activates tap to neutral)**	2
71	% Voltage Reduction In Effect (Read Only)	
72	Local Reduction %	2
73	Remote #1 %	2
74	Remote #2 %	2
75	Remote #3 %	2
76	# of Pulse Reduction Steps	2
77	% of Voltage Reduction Per Pulse Step	2
79	Soft ADD-AMP limits** 0 = Off, 1 = On; High limit; Low limit;	2
VOLTAGE LIMITER		
80	Voltage Limiting Mode 0 = Off, 1 = High Limit Only 2 = High and Low Limits	2
81	High Voltage Limit, volts	2
82	Low Voltage Limit, volts	2

Notes:
H-D, T = Highest (maximum) value since last reset, date & time
L-D, T = Lowest (minimum) value since last reset, date & time
P = Present value
THD = Total Harmonic Distortion
TPI = Tap position indication

Q = Quantity of operations since last change
R_ = Date of last counter change
R¯ = Time of last counter change
* Change/Reset and Sub-function codes only on CL-5E control
** CL-5E only

See next page for more function codes

Function Code	Function	Security Level Change/Reset
METERING PROFILE RECORDER		
85	Profile Period (5, 10, 15, 30, 60, 90, 120 min.)** 1 = Parameter 1, 2 = Parameter 2, 3 = Parameter 3, 4 = Parameter 4, 5 = Data Retrieval Mode (0 = Off, 1 = On)	1
WATCHDOG DIAGNOSTICS		
89	Firmware Version #	
90	Number of Defaults	
91	Self Test	
93	Number of EEPROM Corrections	3
94	Number of Resets	3
95	System Status Code (Read Only) 0 All Systems Good 1 EEPROM Write Failure 2 EEPROM Erase Failure 3 Frequency Detection Failure 4 No Sampling Interrupt-Failure 5 Analog-To-Digital Converter-Failure 6 Invalid Critical Parameters-Failure 7 No Input Voltage Detected-Warning 8 No Output Voltage Detected-Failure 9 No Input & Output V Detected-Failure 10 TPT No Neutral Sync Signal-Warning	
SECURITY ACCESS		
92	Security Override (1 = Override 1, etc.)	3
96	Level 1 Security Code	3
97	Level 2 Security Code	3
98	Level 3 Security Code	3
99	ENTER SECURITY CODE	

** CL-5E control only.

TABLE 3-2
Function Codes

Function Code	Function Code Extension	Parameter	Unit of Measure	Security Level			Default Value	Key Entry Limit	
				To Read	To Change	To Reset		Low	High
00	—	Operation Counter	—	0	NA	NA	NA	NA	NA
	• The operation counter is activated by detecting tap changer motor operation which is determined by sensing current flow in the holding switch circuit. • The operations count is written into non-volatile memory after every ten (10) counts. • In the event of a power outage, the count will round back to the nearest ten (10), and then add five (5) to obtain the restored count when power recovers. EXAMPLE: Count 218; After Power Loss/Recovery = 215								
00*	Q,R_,R¯,1 2, 3, 4, 5 ,6	Operation Counter	—	0	3	3	NA	NA	NA
	• The operation counter is activated by detecting tap changer motor operation which is determined by sensing current flow in the holding switch circuit. • The main operations count is written into non-volatile memory after every ten (10) counts. The subfunction counts are written to non-volatile memory hourly, or daily, as specified below. • In the event of a power outage, the main operations count will round back to the nearest ten (10), and then add five (5) to obtain the restored count when the power recovers. EXAMPLE: Count 218; After Power Loss/Recovery = 215. Applicable subfunction codes (1, 2, & 3) shall reset to zero in the event of a power outage. • Q, the quantity of operations since last change, is displayed upon entering this function code. Scroll (up or down) to R_, to obtain date, R¯ for time of the last counter change. This counter may be set to a specific value. • 1-6 are subfunctions of function code 00. They are all resettable. They are defined as follows: • 1 = Operations in the last 24 hours (updated hourly) • 2 = Operations in the last 30 days (updated daily) • 3 = Operations since the beginning of current month (updated daily, and reset if clock's month is changed.) • 4 = Operations last calendar month (if reset, this field will remain zero until the first of the next month.) • 5 = Operations since January 1st of current year (updated daily, and reset if clock's year is changed.) • 6 = Operations in last calendar year (if reset, this field will remain zero until the first of the next year.)								
01	—	Set Voltage (Forward)	V	0	2	NA	120.0	100.0	135.0
	• The set voltage is the voltage level to which the control will regulate, on the 120 V base, during forward power flow.								
02	—	Bandwidth (Forward)	V	0	2	NA	2.0	1.0	6.0
	• The bandwidth is defined as the total voltage range, around the set voltage, which the control will consider as a satisfied (in-band) condition, during forward power flow. EXAMPLE: A bandwidth of 2.0 V and a set voltage of 120 V will establish a low limit of 119.0 V and a high limit of 121.0 V.								
03	—	Time Delay (Forward)	sec.	0	2	NA	30	5	180
	• The time delay is the period of time that the control waits, from when the voltage first goes out-of-band to when a tap change is initiated, during forward power flow. • See Function Code 42, Control Operating Mode.								

* CL-5E control only.

Function Code	Function Code Extension	Parameter	Unit of Measure	Security Level			Default Value	Key Entry Limit	
				To Read	To Change	To Reset		Low	High
04	—	Line Compensation, Resistance (Forward)	V	0	2	NA	0.0	–96.0	96.0
	• The resistive line drop compensation value is used to model the resistive line voltage drop between the regulator and the theoretical load center. • The control uses this parameter, in conjunction with the regulator configuration (Function Code 41) and the load current, to calculate and regulate to the compensated voltage (displayed at Function Code 8) during forward power flow.								
05	—	Line Compensation, Reactance (Forward)	V	0	2	NA	0.0	–96.0	96.0
	• The reactive line drop compensation value is used to model the reactive line voltage drop between the regulator and the theoretical load center. • The control uses this parameter, in conjunction with the regulator configuration (Function Code 41) and the load current, to calculate and regulate to the compensated voltage (displayed at Function Code 8) during forward power flow.								
06	—	Load Voltage, Secondary	V	0	NA	NA	NA	NA	NA
	• This is the fundamental RMS voltage, referred to the secondary, which appears at the output (load) terminals of the regulator. • Since ratio correction is performed by the firmware, this parameter is scaled according to the inputs at Function Code 43 (System Line Voltage) and Function Code 44 (overall PT Ratio).								
07	—	Source Voltage, Secondary	V	0	NA	NA	NA	NA	NA
	• This is the fundamental RMS voltage, referred to the secondary, which appears at the input (source) terminals of the regulator. • Since ratio correction is performed by the firmware, this parameter is scaled according to the inputs at Function Code 43 (System Line Voltage) and Function Code 44 (overall PT Ratio). • The control requires source voltage from a differential or source potential transformer or from the source voltage calculator to obtain this parameter. Lack of this voltage will result in the parameter displaying dashes. Refer to page 4-1.								
08	—	Compensated Voltage, Secondary	V	0	NA	NA	NA	NA	NA
	• This is the calculated voltage at the load center, referred to the secondary. • This is based upon the resistive compensation setting (Function Codes 4 or 54), reactive compensation setting (Function Codes 5 or 55), and the load current. • This is the voltage that the regulator is regulating during either forward or reverse power flow.								
09	—	Load Current, Primary	A	0	NA	NA	NA	NA	NA
	• This is the fundamental RMS current flowing in the primary circuit. • This parameter is scaled according to the CT primary rating which is entered at Function Code 45.								
10	—	Load Voltage, Primary kV	kV	0	NA	NA	NA	NA	NA
	• This is the fundamental RMS voltage, referred to the primary, which appears at the output (load) terminals of the regulator. • Since ratio correction is performed by the firmware, this parameter is scaled according to the inputs at Function Code 43 (System Line Voltage) and Function Code 44 (overall PT ratio).								
11	—	Source Voltage, Primary kV	kV	0	NA	NA	NA	NA	NA
	• This is the fundamental RMS voltage, referred to the primary, which appears at the input (source) terminals of the regulator. • Since ratio correction is performed by the firmware, this parameter is scaled according to the inputs at Function Code 43 (System Line Voltage) and Function Code 44 (overall PT ratio). • The control requires an input voltage from a differential or source potential transformer to obtain this parameter. Lack of this voltage will result in the parameter displaying dashes. Refer to page 4-1.								
12	P	Tap Position Indication	Tap	0	3	NA	NA	–16	16
	• This is the present position of the tap changer. • The tap position indication is reset when in the neutral position, as indicated by the neutral light circuit. Tap positions are displayed from – 16 to 16 corresponding to 16 Lower (regulator bucking) to 16 Raise (regulator boosting), respectively. • Function Code 12P may be changed via the keypad by accessing security level 3. • This is the actual percentage that the regulator is actively boosting (raising) or bucking (lowering) the input (source) voltage. • This parameter is displayed after pressing the scroll-up key after entering function Code 12. • This is calculated as follows: Percent Regulation = ([Output/Input] -1) x 100								

Function Code	Function Code Extension	Parameter	Unit of Measure	Security Level			Default Value	Key Entry Limit	
				To Read	To Change	To Reset		Low	High
12 (Cont.)	—	Percent Regulation	%	0	NA	NA	NA	NA	NA
	• When the regulator output voltage is greater than the input voltage (regulator boosting), the sign is implied (+). When the output voltage is lower than the input voltage. • The control requires an input voltage to obtain this parameter. Lack of this voltage will result in the parameter displaying dashes. Refer to page 4-1.								
13	—	Power Factor	—	0	NA	NA	NA	NA	NA
	• This is the power factor of the primary circuit, as represented by the phase difference between the line current and voltage. • Lagging current, or inductive loads, are designated by an implied (+) sign, and leading current, or capacitive loads, are designated by a (-) sign								
14	—	kVA Load	kVA	0	NA	NA	NA	NA	NA
	• This is the total kilovolt-amperes drawn by the load, as calculated by the product of the primary kV (Function Code 10) times the primary load current (Function Code 9). See Figure 3-3.								
15	—	kW Load	kW	0	NA	NA	NA	NA	NA
	• This is the total kilowatts (true power) consumed by the load. • This is calculated by the product of the power factor (Function Code 13) times the kVA load (Function Code 14). See Figure 3-3.								
16	—	kvar Load	kvar	0	NA	NA	NA	NA	NA
	• This is the total kilovolt-amperes reactive (reactive power) drawn by the load. • It is this reactive power which adds to losses on the line, yet does not do any work. See Figure 3-3.								

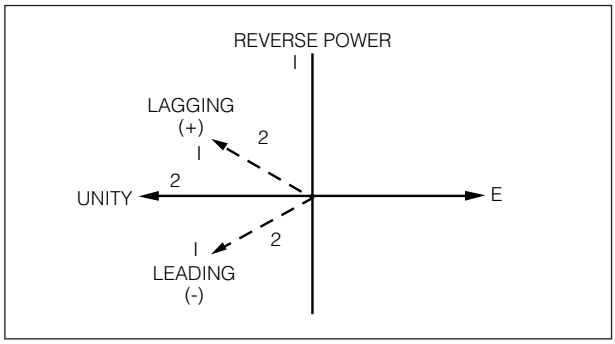

Figure 3-1.
Reverse power vector diagram.

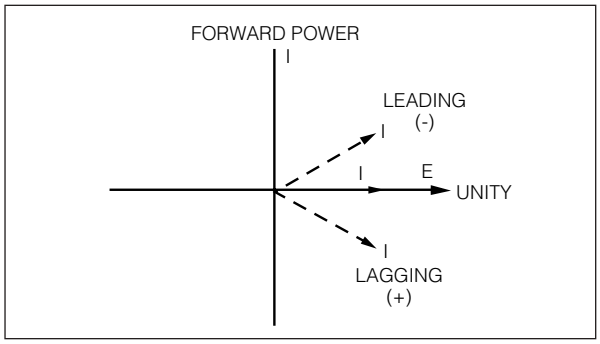

Figure 3-2.
Forward power vector diagram.

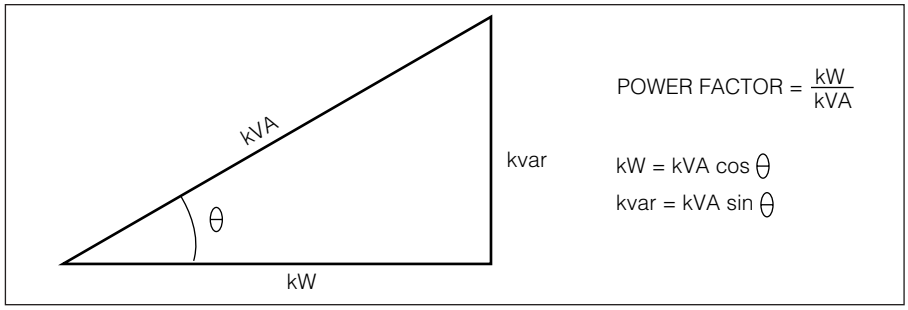

Figure 3-3.
Power Triangle

Function Code	Function Code Extension	Parameter	Unit of Measure	Security Level			Default Value	Key Entry Limit	
				To Read	To Change	To Reset		Low	High
17	—	Line Frequency	Hz	0	NA	NA	NA	NA	NA
	• This is the frequency of the power line, as measured by the control. • The control is capable of operating on systems from 45 to 65 Hz with no loss of accuracy in its measurements.								
18	—	Voltage THD	%	0	NA	NA	NA	NA	NA
	3, 5, 7, 9, 11, 13	Voltage Harmonics	%	0	NA	NA	NA	NA	NA
	• The total harmonic distortion (THD) is displayed after entering Function Code 18. The harmonic contents at the 3rd, 5th, 7th, 9th, 11th and 13th harmonic frequencies are displayed by pressing the scroll-up key. “3, 5, 7, 9, 11, and 13” are displayed as a Function Code extension to identify the individual harmonic values. • The total harmonic distortion is computed as the RSS (square root of the sum of the squares) of the six individual odd harmonic values. • The value displayed is a percentage of the fundamental RMS voltage. Example: 120.0 V of 60 Hz fundamental (power line frequency), with a reading of 0.5 at the 7th harmonic (420 Hz), is 0.6 V RMS.								
19	—	Current THD	%	0	NA	NA	NA	NA	NA
	3, 5, 7, 9, 11, 13	Current Harmonics	%	0	NA	NA	NA	NA	NA
	• The total harmonic distortion (THD) is displayed after entering Function Code 19. The harmonic contents at the 3rd, 5th, 7th, 9th, 11th and 13th harmonic frequencies are displayed by pressing the scroll-up key. “3, 5, 7, 9, 11, and 13” are displayed as a Function Code extension to identify the individual harmonic values. • The total harmonic distortion is computed as the RSS (square root of the sum of the squares) of the six individual odd harmonic values. • This is displayed as a percentage of the fundamental RMS voltage. Example: 200 A of 60 Hz fundamental (power line frequency), with a reading of 1.9 at the 5th harmonic (300 Hz), is 3.8 A RMS.								
20	H, H_, H^{-}, L, L_, L^{-}, P	Load Voltage Demand (Forward)	V	0	NA	0	Reset**	NA	NA
	• This is the secondary output voltage of the regulator, as a demand value, according to the demand time interval at Function Code 46. • H, the highest value since last reset, is displayed after entering this Function Code. Scroll up to H_ to obtain date, and H^{-} for time the maximum value occurred. Continue to scroll up to L, the lowest value since reset, L_ for date, and L^{-} for time the lowest value occurred. Continue to scroll up to P for present value.								
21	H, H_, H^{-}, L, L_, L^{-}, P	Compensated Voltage Demand (Forward)	V	0	NA	1	Reset**	NA	NA
	• This is the calculated secondary voltage at the load center, as a demand value, according to the demand time interval at Function Code 46. • The line compensation settings for resistance and reactance (Function Codes 4 and 5) are used in this calculation. • H, the highest value since last reset, is displayed after entering this Function Code. Scroll up to H_, to obtain date, and H^{-} for time the maximum value occurred. Continue to scroll up to L, the lowest value since reset, L_ for date, and L^{-} for time the lowest value occurred. Continue to scroll up to P for present value.								
22	H, H_, H^{-}, L, L_, L^{-}, P	Load Current Demand (Forward)	A	0	NA	1	Reset**	NA	NA
	• This is the load current, as a demand value, according to the demand time interval at Function Code 46. • H, the highest value since last reset, is displayed after entering this Function Code. Scroll up to H_ to obtain date, and H^{-} for time the maximum value occurred. Continue to scroll up to L, the lowest value since reset, L_ for date, and L^{-} for time the lowest value occurred. Continue to scroll up to P for present value.								
23	H	Power Factor at Maximum kVA Demand (Forward)	—	0	NA	[A]	“----” (invalid)	NA	NA
	• This is the instantaneous power factor of the load at the first time when the maximum kVA demand occurred, since last reset. • (A) This parameter is associated with the maximum kVA demand and, therefore, cannot be reset independent of that parameter.								

* CL-5E Control only.
**A default value of “Reset” indicates that the parameter is reset to the present value.

Function Code	Function Code Extension	Parameter	Unit of Measure	Security Level			Default Value	Key Entry Limit	
				To Read	To Change	To Reset		Low	High
23	L	Power Factor at Minimum kVA Demand (Forward)	—	0	NA	[A]	"----" (invalid)	NA	NA
	• This is the instantaneous power factor of the load at the first time when the minimum kVA demand occurred, since last reset. • The power factor at maximum kVA demand "H" is displayed when entering Function Code 23, scroll up to the power factor at minimum kVA demand "L" value. • (A) This parameter is associated with the minimum kVA demand and, therefore, cannot be reset independent of that parameter.								
24	H, H_, H^{-}, L, L_, L^{-}, P	kVA Load Demand (Forward)	kVA	0	NA	1	Reset**	NA	NA
	• This is the load kVA, as a demand value, according to the demand time interval at Function Code 46. • H, the highest value since last reset, is displayed after entering this Function Code. Scroll up to H_, to obtain date, and H^{-} for time the maximum value occurred. Continue to scroll up to L, the lowest value since reset, L_ for date, and L^{-} for time the lowest value occurred. Continue to scroll up to P for present value.								
25	H, H_, H^{-}, L, L_, L^{-}, P	kW Load Demand (Forward)	kW	0	NA	1	Reset**	NA	NA
	• This is the load kW, as a demand value, according to the demand time interval at Function Code 46. • H, the highest value since last reset, is displayed after entering this Function Code. Scroll up to H_ to obtain date, and H^{-} for time the maximum value occurred. Continue to scroll up to L, the lowest value since reset, L_ for date, and L^{-} for time the lowest value occurred. Continue to scroll up to P for present value.								
26	H, H_, H^{-}, L, L_, L^{-}, P	kvar Load Demand (Forward)	kvar	0	NA	1	Reset**	NA	NA
	• This is the load kvar, as a demand value, according to the demand time interval at Function Code 46. • H, the highest value since last reset, is displayed after entering this Function Code. Scroll up to H_ to obtain date, and H^{-} for time the maximum value occurred. Continue to scroll up to L, the lowest value since reset, L_ for date, and L^{-} for time the lowest value occurred. Continue to scroll up to P for present value.								
27	H, H_, H^{-}	Maximum Tap Position	Tap	0	NA	1	Reset**	NA	NA
	• This is the highest tap position that the regulator has reached since last reset. • H, the highest position since last reset, is displayed after entering this Function Code. Scroll up to H_ for date, and H^{-} for time the highest position occurred. • The maximum position and associated date and time can be reset via the reset key or via master reset. Function Code 38. This parameter is not reset by the draghand reset switch.								
	$\underline{}^{-}$ —	Maximum % Boost (Minimum % Buck)	%	0	NA	1	Reset**	NA	NA
	• This is the highest percentage that the regulator has raised the input voltage since last reset. • Scroll up from 27 H^{-} to read this parameter. • This parameter is the upper draghand value for the present percent regulation, Function Code 12. • The control requires an input voltage from a differential or source potential transformer to obtain this parameter. Lack of this voltage will result in the parameter displaying dashes. Refer to page 4-1.								
28	L, L_, L^{-}	Minimum Tap Position	Tap	0	NA	1	Reset**	NA	NA
	• This is the lowest tap position that the regulator has reached since last reset. • L, the lowest position since last reset, is displayed after entering this Function Code. Scroll up to L_, for date, and L^{-} for time the lowest position occurred. • The minimum position and associated date and time can be reset via the reset key of via master reset, Function Code 38. This parameter is not reset by the draghand reset switch.								
	—	Maximum % Buck (Minimum % Boost)	%	0	NA	1	Reset**	NA	NA
	• This is the highest percentage that the regulator has lowered the input voltage since last reset. • Scroll up from 28 L^{-} to read this parameter. • This parameter is the lower draghand value for the present percent regulation, Function Code 12. • The control requires an input voltage from a differential or source potential transformer to obtain this parameter. Lack of this voltage will result in the parameter displaying dashes. Refer to page 4-1.								

* CL-5E control only.
**A default value of "Reset" indicates that the parameter is reset to the present value.

Function Code	Function Code Extension	Parameter	Unit of Measure	Security Level			Default Value	Key Entry Limit	
				To Read	To Change	To Reset		Low	High
29*	H, H_, H‾, L, L_, ,L‾, P	Source Voltage Demand (Forward)	V	0	NA	NA	NA	NA	NA
	• This is the primary input voltage of the regulator, as a demand value, according to the demand time interval at Function Code 46. • H, the maximum source voltage seen, is displayed after this function code is entered. Scroll up to H_ for date, and H‾ for time the maximum source voltage occurred. Continue scrolling up to see L, the lowest source voltage seen, followed by the L_ and L‾, the date and time of its occurrence. Continue to scroll up to P to see the present value.								
30	H, H_, H‾, L, L_, L‾, P	Load Voltage Demand (Reverse)	V	0	NA	1	Reset**	NA	NA
	• This is the secondary output voltage of the regulator during reverse power flow, as a demand value, according to the demand time interval at Function Code 46. • H, the highest value since last reset, is displayed after entering this Function Code. Scroll up to H_ to obtain date, and H‾ for time the maximum value occurred. Continue to scroll up to L, the lowest value since reset, L_ for date, and L‾ for time the lowest value occurred. Continue to scroll up to P for present value. • The control requires an input voltage from a differential or source potential transformer to obtain this parameter. Lack of this voltage will result in this parameter displaying dashes. Refer to page 4-1.								
31	H, H_, H‾, L, L_, L‾, P	Compensated Voltage Demand (Reverse)	V	0	NA	1	Reset**	NA	NA
	• This is the calculated secondary voltage at the load center during reverse power flow, as a demand value, according to the demand time interval at Function Code 46. • The line compensation setting for resistance and reactance (Function Codes 54 and 55) are used in this calculation. • H, the highest value since last reset, is displayed after entering this Function Code. Scroll up to H_ to obtain date, and H‾ for time the maximum value occurred. Continue to scroll up to L, the lowest value since reset, L_ for date, and L‾ for time the lowest value occurred. Continue to scroll up to P for present value. • The control requires an input voltage from a differential or source potential transformer to obtain this parameter. Lack of this voltage will result in this parameter displaying dashes. Refer to page 4-1.								
32	H, H_, H‾, L, L_, L‾, P	Load Current Demand (Reverse)	A	0	NA	1	Reset**	NA	NA
	• This is the load current during reverse power flow, as a demand value, according to the demand time interval at Function Code 46. • H, the highest value since last reset, is displayed after entering this Function Code. Scroll up to H_ to obtain date, and H‾ for time the maximum value occurred. Continue to scroll up to L, the lowest value since reset, L_ for date, and L‾ for time the lowest value occurred. Continue to scroll up to P for present value. • The control requires an input voltage from a differential or source potential transformer to obtain this parameter. Lack of this voltage will result in this parameter displaying dashes. Refer to page 4-1.								
33	H	Power Factor at Maximum kVA Demand (Reverse)	—	0	NA	[A]	"----" (invalid)	NA	NA
	• This is the instantaneous power factor of the load at the first time the maximum kVA demand occurred during reverse power flow since last reset. • The control requires an input voltage from a differential or source potential transformer to obtain this parameter. Lack of this voltage will result in this parameter displaying dashes. Refer to page 4-1. • (A) This parameter is associated with the maximum kVA demand and, therefore, cannot be reset independent of that parameter.								
33	L	Power Factor at Minimum kVA Demand (Reverse)	—	0	NA	[A]	"----" (invalid)	NA	NA
	• This is the instantaneous power factor of the load at the first time the minimum kVA demand occurred during reverse power flow since last reset. • The power factor at maximum kVA demand "H" is displayed after entering Function Code 33, scroll up to the power factor at minimum kVA demand "L" value. • The control requires an input voltage from a differential or source potential transformer to obtain this parameter. Lack of this voltage will result in this parameter displaying dashes. Refer to page 4-1. • (A) This parameter is associated with the minimum kVA demand and, therefore, cannot be reset independent of that parameter.								

* CL-5E control only.
** A default value of "Reset" indicates that the parameter is reset to the present value.

Function Code	Function Code Extension	Parameter	Unit of Measure	Security Level			Default Value	Key Entry Limit	
				To Read	To Change	To Reset		Low	High
34	H, H_, H¯, L, L_, L¯, P	kVA Load Demand (Reverse)	kVA	0	NA	1	Reset**	NA	NA
	• This is the load kVA during reverse power flow, as a demand value, according to the demand time interval at Function Code 46. • H, the highest value since last reset, is displayed after entering this Function Code. Scroll up to H_ to obtain date, and H¯ for time the maximum value occurred. Continue to scroll up to L, the lowest value since reset, L_ for date, and L¯ for time the lowest value occurred. Continue to scroll up to P for present value. • The control requires an input voltage from a differential or source potential transformer to obtain this parameter. Lack of this voltage will result in this parameter displaying dashes. Refer to page 4-1.								
35	H, H_, H¯, L, L_, L¯, P	kW Load Demand (Reverse)	kW	0	NA	1	Reset**	NA	NA
	• This is the load kW during reverse power flow, as a demand value, according to the demand time interval at Function Code 46. • H, the highest value since last reset, is displayed after entering this Function Code. Scroll up to H_ to obtain date, and H¯ for time the maximum value occurred. Continue to scroll up to L, the lowest value since reset, L_ for date, and L¯ for time the lowest value occurred. Continue to scroll up to P for present value. • The control requires an input voltage from a differential or source potential transformer to obtain this parameter. Lack of this voltage will result in this parameter displaying dashes. Refer to page 4-1.								
36	H, H_, H¯, L, L_, L¯, P	kvar Load Demand (Reverse)	kvar	0	NA	1	Reset**	NA	NA
	• This is the load kvar during reverse power flow, as a demand value, according to the demand time interval at Function Code 46. • H, the highest value since last reset, is displayed after entering this Function Code. Scroll up to H_ to obtain date, and H¯ for time the maximum value occurred. Continue to scroll up to L, the lowest value since reset, L_ for date, and L¯ for time the lowest value occurred. Continue to scroll up to P for present value. • The control requires an input voltage from a differential or source potential transformer to obtain this parameter. Lack of this voltage will result in this parameter displaying dashes. Refer to page 4-1.								
37*	H, H_, H¯, L, L_, L¯, P	Source Voltage Demand (Reverse)	V	0	NA	NA	NA	NA	NA
	• This is the primary input voltage of the regulator during reverse power flow, as a demand value, according to the demand time interval at Function Code 46. • H, the maximum source voltage seen, is displayed after this function code is entered. Scroll up to H_ for date, and H¯ for time the maximum source voltage occurred. Continue scrolling up to see L, the lowest source voltage seen, followed by the L_ and L¯, the date and time of its occurrence. Continue to scroll up to P to see the present value.								
38	—	Master Demand Reset & Tap Position Indication Reset	—	NA	NA	1	NA	NA	NA
	• All demand metering and tap position maximum (H) and minimum (L) values will be reset to their corresponding present (P) values when this function code is accessed. Successful master reset is indicated by the word “done” appearing on the display. • All dates and times associated with demand metering and tap position maximum and minimum values will be reset to the present date and time. • If the present demand value or tap position is in an invalid state (dashes), the maximum and minimum values will also become invalid (displaying dashes). • Individual H and L values and their date/time may be reset to the present value by first accessing the appropriate H or L value, or its date or time, and then pressing the reset key. • Scrolling to this parameter is not allowed.								
39	1	Source Voltage Calculation (CL-5C and later only)	—	0	2	NA	0	0	1
	• The source side voltage is calculated based on tap position and the regulator type of A or B (for series transformer, use type A): 0 = source voltage calculator off 1 = source voltage calculator on • Subfunction 1 defines to the control, the regulator type, as defined by ANSI. Regulator type is defined on the nameplate. 1 = A 2 = B • The calculated method provides accuracy to ±1.5% maximum error. • When the calculated values are used, a small “c” is shown on the display following the function code. If the tap position becomes invalid, the calculated values become invalid and if the regulator uses the calculated values, it will idle until conditions are established to valid values for the decision process.								

* Available on CL-5E control when available.
**A default value of “Reset” indicates that the parameter is reset to the present value.

Function Code	Function Code Extension	Parameter	Unit of Measure	Security Level			Default Value	Key Entry Limit	
				To Read	To Change	To Reset		Low	High
40	—	Regulator Identification	—	0	2	NA	12345	1	32766
	• Provision is made for entry of a number to uniquely identify each control. • The serial number of the control (as shown on the decal on the back of the front panel) was entered at Function Code 40 at the factory. However, any other number within the limits defined above may be chosen instead. • This permits easy identification when data is collected via the Data Reader or other means.								
41	—	Regulator Configuration	—	0	2	NA	"----" (invalid)	0	2
	• The control is designed to operate on wye-connected or delta-connected three-phase systems. • Regulators connected line-to-ground (wye or star) develop potentials and currents suitable for direct implementation in the control. • Regulators connected line-to-line (delta) develop a potential-to-current phase shift which is dependent upon whether the regulator is defined as leading or lagging. This phase shift must be known by the control to permit accurate calculations for correct operation. This is accomplished by entering the proper code: 0 = Wye (or Star); 1 = Delta Lagging; or 2 = Delta Leading. • See Reference Bulletin R225-10-1 for a discussion of delta connections. See page 1-7 for use of the control to determine whether the regulator is leading or lagging.								
42	—	Control Operating Mode	—	0	2	2	0	0	2
	• The manner in which the control responds to out-of-band conditions is selectable by the user. The appropriate mode is selected by entering one of the corresponding codes: 0 = Sequential (Standard) 1 = Time Integrating 2 = Voltage Averaging • For detailed information, see Control Operating Modes, page 2-8.								
43	—	System Line Voltage	V	0	2	NA	"----" (invalid)	2400	36000
	• The control is designed to operate on primary system voltages from 2400 V to 36000 V. • Ratio correction is performed by the firmware, and consequently, the primary voltage must be entered for this calculation. EXAMPLES: A regulator installed on a 7200 V system (line-to-neutral) would have 7200 entered at Function Code 43. A regulator installed open or closed delta on an 11000 V system (line-to-line) would have 11000 entered at Function Code 43.								
44	—	Overall Potential Transformer Ratio	—	0	2	NA	"----" (invalid)	20.0	300.0
	• The control is designed to operate on primary system voltages from 2400 V to 36000 V. • Ratio correction is performed by the firmware, and consequently, the overall potential transformer (P.T.) ratio must be entered for this calculation. The overall P.T. ratio is available on the regulator nameplate, and is summarized in Tables 1-10 and 1-11 on page 1-20 and 1-21 for most regulator ratings. EXAMPLE: A 13800 V regulator, installed on a 7970 V system, would have 7970 entered at Function Code 43, and 63.7 entered at Function Code 44. The control will then define the 125.1 V (output from the back panel ratio correction transformer) as the 120-base voltage, and 120 V is displayed at Function Code 6.								
45	—	Current Transformer Primary Rating	A	0	2	NA	100	25	2000
	• The control is designed for 200 mA as the rated current transformer (C.T.) output current, and will meter to 400 mA (200% load) with no loss of accuracy. • Ratio correction is performed by the firmware, and consequently the C.T. primary rating must be entered. The C.T. primary rating is available on the regulator nameplate, and is summarized in Table 1-9 on page 1-17 for most regulator ratings. EXAMPLE: A 7620 V, 328 A regulator (250 kVA) would have a C.T. primary rating of 400 A, and therefore, 400 is entered at Function Code 45.								
46	—	Demand Time Interval	min.	0	2	NA	15.0	3.0	60.0
	• This is the time period during which the demand integral is performed for all demand readings, Function Codes 20 through 36. • Demand readings are useful because they represent the values which produce actual heating effects in electrical equipment, and they do not respond to the continuous fluctuations which occur on the line.								
47	—	Voltage Calibration	V	0	3	NA	[B]	110.0	130.0
	• The voltage which the control actually measures is displayed at Function Code 47. In the example given in Function Code 44 description, Function Code 47 would indicate 125.1 V when Function Code 6 indicated 120 V. • Calibration is performed by the factory, and should not be necessary in the field. • To calibrate, this value is compared to a reference voltmeter and, if different, is changed to display the correct value. • Scrolling to this parameter is not allowed. • See Control Calibration, page 6-4.								

[B] Representative calibration "factors" are programmed into ROM for use in the event the working memory experiences a default condition.

Function Code	Function Code Extension	Parameter	Unit of Measure	Security Level			Default Value	Key Entry Limit	
				To Read	To Change	To Reset		Low	High
48	—	Current Calibration	mA	0	3	NA	[B]	100.0	400.0
	• The current which the control actually measures, in milli-amps, is displayed at Function Code 48. • The control is designed for 200 mA as the rated C.T. output current, and will meter to 400 mA (200% load) with no loss of accuracy. • Calibration is performed by the factory and should not be necessary in the field. • To calibrate, this value is compared to a reference ammeter and, if different, is changed to display the correct value. • Scrolling to this parameter is not allowed. • See Control Calibration, page 6-4.								
49	—	Tap Changer Selection (CL-5D and Later)	NA	0	2	NA	As Manuf.	0	1
	• This function code identifies the tap changer type (See Chapter 5.) This function code is pre-set at the factory. Changing this function code changes the control's sampling rate. • 0 = Quik Drive 1 = Spring/Direct Drive								
50	[C]	Calendar/Clock	—	0	NA	NA	"----" (invalid)	—	—
	1, 2, 3, 4, 5, 6	Year, Month, Day, Hour,	—	0	3	NA	"----" (invalid)	—	—
	• [C] A segment bar after the Function Code 50 in the LCD moves from bottom of display indicating month.day to the top of LCD display to indicate hour.minute. • The date (month.day) is displayed after entering Function Code 50. The time (hour.minute) is displayed after pressing the scroll up key. These are read-only parameters. • Continued depressions of the scroll-up key display function extensions: 1 = year; 2 = month; 3 = day; 4 = hour; 5 = minute; 6 = seconds. These values may be changed if necessary. • If power is restored after internal backup power is exhausted, the Calendar/Clock starts at January 1, 1990; 00:00:00. • Refer to page 4-1.								
51	—	Set Voltage (Reverse)	V	0	2	NA	120.0	100.0	135.0
	• The set voltage is the voltage level to which the control will regulate, on the 120 V base, during reverse power flow. • See Reverse Power Operation, page 4-3.								
52	—	Bandwidth (Reverse)	V	0	2	NA	2.0	1.0	6.0
	• The bandwidth is defined as that total voltage range, around the set voltage, which the control will consider as a satisfied (in-band) condition, during reverse power flow. EXAMPLE: A bandwidth of 3 V and a set voltage of 120 V will establish a low limit of 118.5 V and a high limit of 121.5 V. • See Reverse Power Operation, page 4-3.								
53	—	Time Delay (Reverse)	sec.	0	2	NA	30	5	180
	• The time delay is the period of time (in seconds) that the control waits, from the time when the voltage first goes out-of-band, to the time when the relay closure occurs, during reverse power flow. • See Reverse Power Operation, page 4-3.								
54	—	Line Compensation, Resistance (Reverse)	V	0	2	NA	0.0	–96.0	96.0
	• The resistive line drop compensation value is used to model the resistive line losses between the regulator and the theoretical load center. • The control uses this parameter, in conjunction with the regular configuration (Function Code 41) and the load current flow, to calculate the compensated voltage (displayed at Function Code 8) during the reverse power flow. • See Reverse Power Operation, page 4-3.								
55	—	Line Compensation, Reactance (Reverse)	V	0	2	NA	0.0	–96.0	96.0
	• The reactive line drop compensation value is used to model the reactive line losses between the regulator and the theoretical load center. • The control uses this parameter, in conjunction with the regular configuration (Function Code 41) and the load current flow, to calculate the compensated voltage (displayed at Function Code 8) during the reverse power flow. • See Reverse Power Operation, page 4-3.								

[B] Representative calibration "factors" are programmed into ROM for use in the event the working memory experiences a default condition.

Function Code	Function Code Extension	Parameter	Unit of Measure	Security Level			Default Value	Key Entry Limit	
				To Read	To Change	To Reset		Low	High
56	—	Reverse Sensing Mode	—	0	2	NA	0	0	6
	• The control offers six different response characteristics for reverse power flow operation, selectable by the user. The six modes, and their corresponding codes are: 0 = Locked Forward 1 = Locked Reverse [D] 2 = Reverse Idle 3 = Bi-directional [D] 4 = Neutral Idle [D] 5 = Co-generation [D] 6 = Reactive bi-directional [D] • See Reverse Power Operation, page 4-3.								
57	—	Reverse Threshold	%	0	2	NA	2	1	5
	• This is the current threshold at which the control switches operation, either from forward to reverse, or reverse to forward. • This threshold is programmable as a percentage of the rated C.T. primary rating. EXAMPLE: A 328 A regulator utilizing a C.T. with a 400 A primary rating, and with a 3% threshold value, would have a threshold of 12 A. • The metering of the control switches on a fixed 1% threshold, completely independent from Function Code 57. • See Reverse Power Operation, page 4-3.								
60	—	Data Port (Channel #1) Baud Rate	—	0	2	NA	4	1	4
	• The control microprocessor has two communications channels, each with selectable baud rates. • Channel #1 is dedicated to the 9-pin Data Port located on the control front panel. The available baud rates for Channel #1 are: 1 = 300 Baud; 2 = 1200 Baud; 3 = 2400 Baud; and 4 = 4800 Baud. • To permit communications with the McGraw-Edison Data Reader (data gathering device), the Channel #1 baud rate has been factory set to 4800; i.e., Function Code 60 = 4.								
61	—	Communications Protocol	—	0	NA	NA	NA	NA	NA
	• Communications Channel #2 is dedicated to the real-time digital communications interface. Function 61 indicates the type of protocol installed and its revision. The readout is RR.PP (read only). RR is an internal revision number from 1-99. PP is the protocol: 03 = Cooper Power Systems DATA 2179. • CL-5 Series Controls are supplied with DATA 2179 protocol installed. • See Digital SCADA, page 4-11.								
62	—	Data Port (Channel #1) Status	—	0	NA	NA	NA	NA	NA
	• The control microprocessor monitors the communications channels and reports the status of communication channel #1 Data Port sessions at Function 62. • This is for information only. • Status codes are listed with Function Code 63. • The control microprocessor monitors the communications channels and reports the status of channel #2 sessions at Function 63.								
63	—	Communications Port (Channel #2) Status	—	0	NA	NA	NA	NA	NA
	• This is for information use only. • Status codes for both Function Codes 62 and 63 are listed as follows: 0 = Valid message received 1 = Control in local mode 2 = Framing error in the received message 3 = Overrun error in the received message 4 = Noise error in the received message 5 = Parity error in the received message 6 = Check sum error in the received message 7 = Invalid point type requested 8 = Invalid command received 9 = Invalid point number specified "----" = Channel inactive								

[D] Source-side voltage is required for these modes to be active.

Function Code	Function Code Extension	Parameter	Unit of Measure	Security Level			Default Value	Key Entry Limit	
				To Read	To Change	To Reset		Low	High
64	—	Control Communications Address (Protocol 2179)	—	0	2	NA	"----" (invalid)	0	2046
	• Cooper Power Systems has developed advanced controls for various products utilizing common protocol communications. • Each control on the system can be uniquely addressed by the SCADA RTU or other communications device. • The control SCADA address is entered at Function 64 with a factory preset address of 5. • For protocol DATA-2179, the device addresses and responses are as follows: 0-2046 = Unique device address range. Controls with addresses in this range uniquely respond when the particular address is sent. 2047 = Broadcast address. All controls on the system listen and change as commanded, with no response if a message is sent to address 2047.								
65	—	Communications Port (Channel #2) Baud Rate	—	0	2	NA	"----" (invalid)	1	5
	• The user may select the baud rate to which the control system interfaces to the SCADA system. The available baud rates are: 1 = 300 Baud; 2 = 1200 Baud; 3 = 2400 Baud; 4 = 4800 Baud; 5 = 9600 Baud. • The control is factory set for 4800 Baud.								
66	—	Communications Port Handshake Mode	—	0	2	NA	"----" (invalid)	0	2
	• The user can select the appropriate method for control-to-SCADA message interaction (handshake mode). • The transmit/receive handshaking mode allows adaptability to different types of communication system interfaces with the CL-5C control. When using mode 2, the handshake out signal is used as the transmit enable. The handshaking input signal is ignored. • The available modes are: 0 = No handshaking. This mode is used for direct communication between the control and a personal computer. It may also be used with an RTU for point-to-point communications. 1 = Not applicable. For C.P.S. use only. 2 = Handshaking is active. This mode is used where a transmit enable signal (push-to-talk) is required as part of the handshaking. Transmit enable is also required when the control is connected in a fiber-optic ring. • See Function Code 68 for the programming of Transmit Enable Delay On and Transmit Enable Delay Off (transmit disable).								
67	—	Communications Port Number of Line Sync Characters	Char.	0	2	NA	"----" (invalid)	0	10
	• Defines the period of time the receive must idle to assume the start of a request message. Dead-line sync is used to determine the start of the request message. When used on a ring-configured or broadcast communication system, the control "hears" messages for devices at other nodes on the received data line. By reading the address, the control determines if the message is intended for it and ignores the remaining bytes if it is not. A period of time during which the received data line is inactive, defines the end of the previous message. This inactive time is the dead-line sync period. The control is now synchronized so that the next byte received is considered the beginning of a new message.The value programmed is the equivalent number of characters that the receive line must remain inactive, to be considered the end of a message. The control determines the actual time delay internally, taking into account baud rate and the number of bits in the character. For example: Baud = 4800; Dead-line sync character = 5 characters Dead time = 5 characters x 10 bits/character* = 50 bits 50 bits @ 4800 bits/second = 10.4 mS dead-line sync time *10 bits/character applies to protocol 2179, 8 data bits, 1 start bit, 1 stop bit. • See Figures 3-4 and 3-5.								

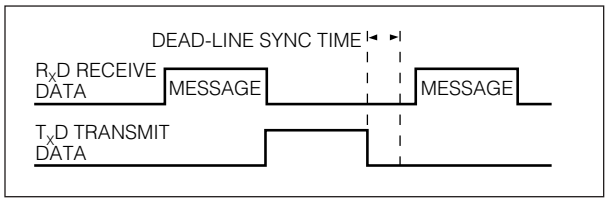

Figure 3-4.
Message received at CL-5 Series control; message is for the CL-5 Series control

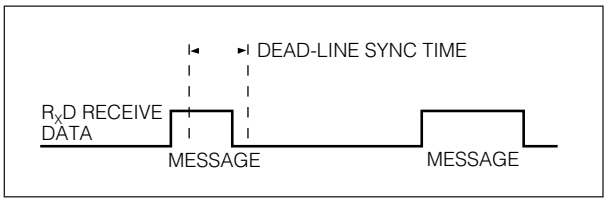

Figure 3-5.
Message received at CL-5 Series control; message is not for the CL-5 Series control

Function Code	Function Code Extension	Parameter	Unit of Measure	Security Level			Default Value	Key Entry Limit	
				To Read	To Change	To Reset		Low	High
68	1	Communications Port Transmit Enable Delay - On	msec.	0	2	NA	"----" (invalid)	0	425
	• When the control is set for transmit control handshaking (Function Code 66 = 2), the user may require a delay to occur between the time when the transmit enable is enabled to when data is transmitted. As an example, if the transmit enable were used as a keying device for a transmitter or modem, a "warm-up" period may be necessary before data can be transmitted. • The delay period can be entered at this function code extension and is normally set to 0 for the presently supported communications system. See Figure 3-6.								
	2	Communications Port Transmit Enable Delay - Off	msec.	0	2	NA	"----" (invalid)	0	250
	• When the control is set for transmit control handshaking (Function Code 66 = 2), the user may require a delay to occur between the time when the data transmission is terminated and when the transmit enable signal is disabled. • The delay period can be entered at this function code extension and is normally set to 0 for the presently supported communications system. See Figure 3-6.								
69	—	Regulation Blocking Status	—	0	2	NA	NA	0	1
	•The control with communications options allows the user to completely control the regulator through the SCADA system. The SCADA system may place the regulator in a "blocked" state, thus inhibiting any further tap changer operation initiated by the control. A practical example might be to perform a certain amount of voltage reduction, and then disable the tap changer (inhibit additional operations) for an indefinite time period. • Statuses are as follows: 0 = Normal (normal automatic operation) 1 = Blocked (automatic operation is inhibited) • The operator may change the state of this code by entering the level 2 security at the control and pressing the CHANGE/RESET key. If SCADA has the control blocked, the operator may override the SCADA system by changing Function Code 69 from 1 to 0, or if the operator chooses to block automatic operation, Function Code 69 can be changed from 0 to 1. • Additional information concerning the SCADA interaction with the control is on page 4-9.								
70	—	Voltage Reduction Mode	—	0	2	NA	0	0	3
	• The control has three voltage reduction modes available for user selection. The appropriate mode is activated by entering the corresponding code: 0 = Off 1 = Local/Digital Remote 2 = Analog Remote - Latching 3 = Remote - Pulse • See Voltage Reduction, page 4-8.								

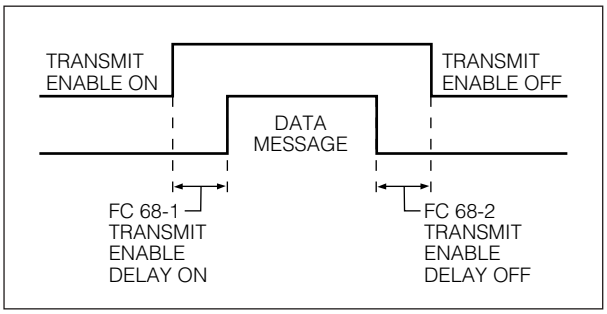

Figure 3-6.
Data transmission from the CL-5 Series control to the communication system for handshaking applications

Function Code	Function Code Extension	Parameter	Unit of Measure	Security Level			Default Value	Key Entry Limit	
				To Read	To Change	To Reset		Low	High
70*	—	Voltage Reduction Mode/ Tap to Neutral	—	0	2	NA	0	0	13
	• The control has three voltage reduction modes available for user selection. The appropriate mode is activated by entering the corresponding code: 0 = Off — 10 = Off, Tap to Neutral Enabled 1 = Local/Digital Remote — 11 = Local/Digital Remote, Tap to Neutral Enabled 2 = Analog Remote (Latching) — 12 = Analog Remote (Latching,) Tap to Neutral Enabled 3 = Pulse — 13 = Pulse, Tap to Neutral Enabled • If enabled, tap-to-neutral is activated by energizing contacts 1 and 2 on TB-2. It is not possible to employ voltage reduction Remote #3 (Function Code 75) if tap-to-neutral is active. • See Voltage Reduction, page 4-8.								
71	—	Percent Voltage Reduction in Effect	%	0	NA	NA	NA	NA	NA
	• This is the actual percentage of voltage reduction presently active. • See Voltage Reduction, page 4-8.								
72	—	Local/Digital Remote Voltage Reduction %	%	0	2	NA	0.0	0.0	10.0
	• The percentage of local voltage reduction to be performed, is entered here. Example: If the regulator is set for 125 V voltage setting and 3.6% voltage reduction is required, 3.6% is entered here (first set Function Code 70 = 1), and the regulator will tap down 4.5 V (3.6% of 125 V) immediately following the time delay period. • When activating voltage reduction via digital SCADA, this is the parameter which is changed to the percent desired. • See Voltage Reduction, page 4-8.								
73	—	Analog Remote Reduction Setting #1	%	0	2	NA	0.0	0.0	10.0
	• Three levels of remotely activated latching voltage reduction are available. • The percentage of voltage reduction to be performed at Removal Level 1 is programmed at the Function Code 73. Remote activation is then accomplished by applying a signal to the appropriate input terminal, when Function Code 70 = 2. • See Remote (Latching) Mode, page 4-9.								
74	—	Analog Remote Reduction Setting #2	%	0	2	NA	0.0	0.0	10.0
	• Three levels of remotely activated latching voltage reduction are available. • The percentage of voltage reduction to be performed at Removal Level 2 is programmed at the Function Code 74. Remote activation is then accomplished by applying a signal to the appropriate input terminal, when Function Code 70 = 2. • See Remote (Latching) Mode, page 4-9.								
75	—	Analog Remote Reduction Setting #3	%	0	2	NA	0.0	0.0	10.0
	• Three levels of remotely activated latching voltage reduction are available. • The percentage of voltage reduction to be performed at Removal Level 3 is programmed at the Function Code 75. Remote activation is then accomplished by applying a signal to two appropriate input terminals, when Function Code 70 = 2. • See Remote (Latching) Mode, page 4-9.								
76	—	Analog Pulsed Voltage Reduction Number of Steps	—	0	2	NA	0	0	10
	• Up to ten steps of voltage reduction are available when pulsed voltage reduction mode is selected. (Function Code 70 = 3.) • Function 76 defines the number of steps selected for pulsed reduction operation. The percentage of voltage reduction of each step is defined at Function Code 77. • See Pulse Mode, page 4-9.								
77	—	Analog Pulsed Voltage Reduction Voltage Reduction Per Step	%	0	2	NA	0.0	0.0	10.0
	• Function Code 77 defines the percentage of voltage reduction which will be applied for each step of pulsed voltage reduction selected at Function Code 76 • See Pulse Mode, page 4-9.								

* CL-5E control only.

Function Code	Function Code Extension	Parameter	Unit of Measure	Security Level			Default Value	Key Entry Limit	
				To Read	To Change	To Reset		Low	High
79*	1, 2	Soft Add-Amp Limits	NA	0	2	2	0	NA	NA
	• The control has soft add-amp capabilities. 0 = Off, 1 = On (Default is off) • Subfunction 1 defines the high soft add amp setting. The allowable values are 16, 14, 12, 10, or 8. Default is 16. • Subfunction 2 defines the low soft add amp setting. The allowable values are -16, -14, -12, -10, or -8. Default is -16. • See Add Amp, Page 1-15 and 4-10.								
80	—	Voltage Limiting Mode	—	0	2	NA	0	0	2
	• The control has voltage limiting capabilities for both high-voltage and low-voltage conditions. • The appropriate mode is activated by entering the corresponding code: 0 = Off 1 = High limit active only 2 = High and low limits active • See Voltage Limiting, page 4-8.								
81	—	High Voltage Limit	V	0	2	NA	130.0	120.0	135.0
	• The high-voltage limit is programmed here. • When the voltage limiting function is activated (Function Code 80 = 1 or 2), the control will prevent the output voltage of the regulator from exceeding this value. • See Voltage Limiting, page 4-8.								
82	—	Low Voltage Limit	V	0	2	NA	105.0	105.0	120.0
	• The low-voltage limit is programmed here. • When the voltage limiting function is activated (Function Code 80 = 2), the control will prevent the output voltage of the regulator from dropping below this value. • See Voltage Limiting, page 4-8.								
85	1, 2, 3, 4	Profile Recorder	NA	0	1	NA	9,14,15,16	6	19
	• Function Code 85, with its four extensions, is used to select the parameters to be included in the profile recorder data table. • The profile recorder samples any four instantaneous metering functions (Function Codes 6 thru 19). The sample interval is every 15 minutes for a 30-hour period (120 values). • See Profile Recorder, page 4-2.								
85*	1, 2, 3, 4, 5,	Profile Recorder	NA	0	1	NA	1 9,14,15,16	1 6	7 19
	• Function Code 85 is used to profile any four instantaneous metering functions (Functions Codes 6 through 22, or demand values 24-26, 29-32, or 34-37) and to set a time interval for profiling data collection. • The sample period (time interval) is defined by function code 85, where 1 = 5 minutes, 2 = 10 minutes, 3 = 15 minutes, 4 = 30 minutes, 5 = 60 minutes, 6 = 90 minutes, 7 = 120 minutes. The last 120 values for each function shall be stored in volatile control memory. • The first four subfunctions of function code 85 define the four instantaneous metering functions (Functions Codes 6 through 22, or demand values 24-26, 29-32, or 34-37) to be profiled. • The fifth subfunction of function code 85 reflects the “on/off” state of the profiler feature related to the 2179 protocol, that determines whether the parameters returned in response to a request message are all the values, or only the “new” values since the last read.								
89	—	Device Firmware Version	—	0	NA	NA	NA	NA	NA
	• This parameter takes the form RR.DD, where RR is the revision number and DD is the device number. The control is device 06. • Scrolling to this parameter is not allowed.								
90	—	Number of Defaults	—	0	NA	NA	NA	NA	NA
	• This is a counter for the number of parameters in the control operating system which have defaulted. • During normal operation this will be zero. • If any number other than zero is encountered, all of the control settings must be examined to determine which has defaulted. Then the setting(s) must be changed to the correct value(s). • Defaulted functions will be identified with the letter “d” after the function code number in the LCD display.								

* CL-5E control only.

Function Code	Function Code Extension	Parameter	Unit of Measure	Security Level			Default Value	Key Entry Limit	
				To Read	To Change	To Reset		Low	High
91	—	Self Test	—	NA	NA	NA	NA	NA	NA
	• The control will execute a self-diagnostic routine by entry of Function Code 91. • This causes the system to re-boot, or initialize itself, and in so doing to check the various components for failures. • The test initiates by lighting all segments in the display for 3 seconds, and then displays PASS or FAIL, depending upon the test results. • "----" (dashes) preceding the PASS indicates that the clock needs to be set. • Performing the self test will appear as a power interruption to the control demand task, and accordingly, it will cause the present demands to go invalid (dashes) and the max/min demands to cease tracking for one demand interval. • Self test does not set all profiler values to zero. • Scrolling to this parameter is not allowed.							
92	—	Security Override	—	0	3	NA	0	0	3
	• Function Code 92 is the control security override parameter. • Entering the level 3 security code at Function Code 99 will permit the security parameters to be modified, 0 = standard security mode 1 = override security level 1 2 = override security levels 2 and 1; 3 = override security levels 3, 2 and 1; • EXAMPLE: With Function Code 92 = 1, metering and tap position resetting may be done without entering security level 1. • See Tap Position Indication, page 4-3.							
93	—	Number of EEPROM Corrections	—	0	NA	3	0	NA	NA
	• This is a counter for the number of times the control has detected an incorrect value in its non-volatile memory (EEPROM), and has changed it to the correct value. • This is for information only.							
94	—	Number of Resets	—	0	NA	3	0	NA	NA
	• This is a counter for the number of times the control has experienced a transient condition (such as a lightning stroke) which caused it to reset. • The control will recover after a transient condition and will resume normal operations.							
95	—	System Status Code	—	0	NA	NA	NA	NA	NA
	• The control is continually checking itself, and the results of this self-diagnosis are displayed at Function Code 95 via a system status code as follows: 0 = All Systems Good 1 = EEPROM Write Failure 2 = EEPROM Erase Failure 3 = Frequency Detection Failure 4 = No Sampling Interrupt - Failure 5 = Analog-to-Digital Converter Failure 6 = Invalid Critical Parameters - Failure 7 = No Source Voltage Detected - Warning 8 = No Output Voltage Detected - Failure 9 = No Source and Output Voltage Detected - Failure 10=TPI. No Neutral Sync Signal - Warning • If the word ERROR appears on the display this indicates a key entry error, not the system status code. See Table 9-2. • See System Protection, page 2-4 and Diagnostics, page 2-5.							
96	—	Level 1 Security Code	—	3	3	NA	1234	1	9999
	• The number to be used as the level 1 security code is entered here. • The level 1 code assigned at the factory is 1234. • Entry of this number at Function Code 99 permits the user to change/reset only the parameters marked as level 1 security (demand and tap position readings). • Scrolling to this parameter is not allowed. • See Security System, page 2-6.							

* CL-5E control only.

Function Code	Function Code Extension	Parameter	Unit of Measure	Security Level			Default Value	Key Entry Limit	
				To Read	To Change	To Reset		Low	High
97	—	Level 2 Security Code	—	3	3	NA	12121	10000	19999
	• The number to be used as the level 2 security code is entered here. • The level 2 code assigned at the factory is 12121. • Entry of this number at Function Code 99 permits the user to change/reset only the parameters marked as level 2 security (control settings, configuration and clock) and level 1 security. • Scrolling to this parameter is not allowed. • See Security System, page 2-6. • The number to be used as the level 3 security code is entered here.								
98	—	Level 3 Security Code	—	3	3	NA	32123	20000	32766
	• The level 3 code assigned at the factory is 32123. • Entry of this number at Function Code 99 permits the user to change/reset any parameter. • NOTE: If the level 3 code is changed by the user, the new value should be recorded and kept in a safe place. If lost, the security codes cannot be displayed or changed, diagnostic codes cannot be displayed or change, and calibration cannot be performed unless the present code is identified by using the Data Reader and Data Reader software or Communication Interface software available from Cooper Power Systems. • Scrolling to this parameter is not allowed. • See Security System, page 2-6.								
99	—	Enter Security Code	—	NA	0	NA	NA	1	32766
	• This is the function code location where the security codes are entered for access to the system. • Scrolling to this parameter is not allowed. • See Security System, page 2-6.								

Control Advanced Features

Differential Voltage

Unless specifically ordered, or required as a part of the specified operation, most regulator designs will be without the internal source-load differential P.T. Units with the CL-5C or newer controls have source voltage calculation available (FC 39). Without a source voltage input, several functions cannot be obtained, and will indicate dashes when displayed (see Table 4-1). Also, Function Code 95 will display a "7" to indicate no input voltage.

TABLE 4-1
Function Code Dependent Upon Differential Voltage

Function Code	Description
7	Source Voltage, Secondary
11	Source Voltage, Primary
12	Percent Regulation
27	Maximum % Boost/Minimum % Buck
28	Maximum % Buck/Minimum % Boost
30-36	All Reverse Metered Demand Values

If the parameters listed in Table 4-1 are desired and the regulator is not able to determine the source voltage, an external source side potential transformer may be connected to the control. (See Reverse Power Operation, page 4-3.)

Calendar/Clock

Integral to several functions of the control is an internal calendar/clock. The digital clock maintains the year, month, day, hour, minute and seconds, and has resolution of 1 second. Hours are in 24-hour (military) time, that is, 3:15 p.m. is shown as 15:15. The clock does not adjust for Daylight Savings Time. It is powered by ac (60 or 50 Hz) and operates under normal power when the control is powered up. When ac power is off, the clock uses a crystal as a reference and a capacitor as the power source. The back-up power will sustain the clock for a minimum of 24 hours. Sixty-five hours on ac power are required to fully charge the capacitor.

Upon powering up the control, if the clock is invalid due to lack of power, four (4) dashes will appear in the display to the left of the word PASS. In this situation the clock will restart at 1/1/90 00:00:00. Until the clock is reset, four dashes will appear on the right of the display whenever the display would normally be blank.

Metering

The control has extensive metering capabilities, which we categorize as Instantaneous, Demand and Profile.

Instantaneous Metering

Instantaneous metering values are stored in RAM, and are refreshed once per second. They may be read at Function Codes 6 through 19. See the detailed description of these parameters starting on page 3-2.

Demand Metering

The control provides demand metering values for six or eight parameters: load voltage, source voltage* (forward and reverse), compensated voltage, load current, kVA load, kW load, and kvar load. For each of these parameters the present "P" value, the maximum "H" value since last reset, and the minimum "L" value since last reset are recorded, as well as the earliest time and date that the maximum and minimum values occurred. Additionally, the power factor at maximum kVA demand and minimum kVA demand are recorded. All of these values are stored in non-volatile memory separately for forward and reverse power conditions.

Demand values may be read at Function Codes 20 through 37. See the detailed description of these parameters starting on page 3-5, and the discussion concerning metering during reverse power flow, starting on page 4-3.

Demand Task Operation

The demand metering function is based upon a sliding window concept, or moving integral. The algorithm implemented simulates the response of a thermal demand meter which will reach 90% of its final value after one demand interval in response to a step function input. (See Figure 4-1.)

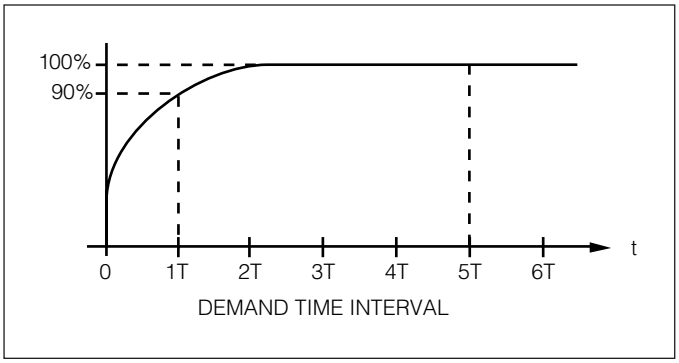

Figure 4-1.
Demand time interval response

* Source voltage: CL-5E only.

The task works like this:

1. For 3 minutes after a power outage or power reversal, no demands are calculated. This allows the utility system to stabilize from the event which created the outage or power reversal.
2. At 3 minutes, the present demands (for the appropriate power direction) are set to their corresponding instantaneous value, and the integration algorithm begins according to the programmed demand interval at Function Code 46.
3. At 15 minutes or at the demand time interval (whichever is longer), the max/min demand values begin to track the present demand, similar to drag hands. All demand values are calculated continuously in the working memory (RAM), and the max/min demands are also stored in the non-volatile memory (EEPROM) every 15 minutes, if a change has occurred. This prevents loss of data during a power interruption or outage.

Notice that the provisions are made to reset any demand value by itself via the change/reset key, or all demands can be reset simultaneously by entering Function Code 38. Maximum (H) and minimum (L) values will be set to their corresponding present (P) demand value and the H and L dates and times will be set to the present date/time. If the present demand is in an invalid state (dashes), the maximum and minimum values will also become invalid, displaying dashes.

Two conditions can cause the present demands to be invalid: The power has just been applied (within the 3 minute freeze period) or the power flow has changed direction. If the control is metering in the forward direction, the reverse present demands will be invalid; and if metering in the reverse direction, the forward present demands will be invalid.

Profile Recorder

Function Code 85.

The CL-5D control has a Profile Recorder (Profiler) function which records any four (4) metering values every 15 minutes for 30 hours (120 time slots). On the CL-5E and newer controls, the time interval is variable, from 5-120 minutes. See Function Code 85 description. To set the Profiler, access security level 1, then enter the parameters of choice at the Function Code extensions 1, 2, 3 and 4. The selectable CL-5D parameters are:

- 6 - Load Voltage, Secondary
- 7 - Source Voltage, Secondary*
- 8 - Compensated Voltage, Secondary
- 9 - Load Current, Primary
- 10 - Load Voltage, Primary
- 11 - Source Voltage, Primary*
- 12 - Present Tap Position
- 13 - Power Factor
- 14 - kVA Load
- 15 - kW Load
- 16 - kvar Load
- 17 - Line Frequency
- 18 - Voltage Total Harmonic Distortion
- 19 - Current Total Harmonic Distortion

*Source voltage required

For the CL-5E, the following parameters are also available for Profiler data collection.

- 20 Forward Load Voltage
- 21 Forward Compensated Voltage
- 22 Forward Load Current
- 24 Forward kVA Load
- 25 Forward kW Load
- 26 Forward kVAR Load
- 29 Forward Source Voltage
- 30 Reverse Load Voltage
- 31 Reverse Compensated Voltage
- 32 Reverse Load Current
- 34 Reverse kVA Load
- 35 Reverse kW Load
- 36 Reverse kVAR Load
- 37 Reverse Source Voltage

TABLE 4-2
Default Values for Profiler Parameters

F.C.	Extension	Value	Parameter
85	1	9	Load Current, Primary
85	2	14	kVA Load
85	3	15	kW Load
85	4	16	kvar Load

EXAMPLE: To record the tap position (FC 12) instead of the load current, do the following:

1. Access security level 2.
2. Press FUNCTION, 8, 5, ENTER.
3. The display will read “85 1 9”, or, if the CL-5E or newer control is installed, the display will read, “85 15”.
4. If the control is a CL-5E or newer, scroll up one value. The control will now read, “85 1 9”.
5. Press CHANGE, 1, 2 ENTER.

The profiler data is stored in working memory (RAM), therefore, if power is lost, all profiler values are lost. Upon return of power, if the clock is still operating on backup power, the profiler will start at the next time interval. If due to lack of power the clock starts with the default hour: minute values of 00:00, the first values will be recorded at 00:15 or at the first time interval, if the CL-5E control is in use.

If a parameter at one of the extensions of Function Code 85 is changed, the entire profiler database will be reset,

that is, all values for all four parameters will be set to 0. To reset all profiler values to 0 either turn the power off, or change one of the Function Code 85 extension values.

If the clock is reset, prior values and times in the profiler will be retained, and the newest value will be recorded at the next time interval. It should be noted that the hour and minute are stored on the profiler, not the month and day.

After all 120 time slots are filled, the oldest set of values is deleted when the newest set of values is recorded.

The time-stamped profiler values are not accessible through the keypad and display. To retrieve the values, download the control database through the Data Port with a McGraw-Edison Data Reader or with a PC using CCI CL-4/CL-5 Interface Program or extract the data through the communications channel.

Tap Position Indication

The control has the ability to track the position of the tap changer. The tap position indication (TPI) function senses the status of the motor and neutral light circuits and does not require source (input) voltage. The present tap position is stored at Function Code 12. EXAMPLES: “8” at Function Code 12 indicates 8 raise and “-7” indicates 7 lower.

The TPI function is synchronized to the position of the tap changer by running the regulator to the neutral position. When the tap changer cannot be returned to neutral due to the voltage support which is necessary, the value of the present tap position may be changed to the position shown by the position indicator main hand by doing the following: Access security level 3; access FC 12; use the CHANGE key to change to the desired value.

The maximum tap position since last reset (upper draghand value of the present tap position) and its date and time are stored at Function Code 27. The minimum tap position since last reset (lower draghand value of the present tap position) and its date and time are stored at Function Code 28. The TPI draghand values and dates/times are reset to the present values by the master reset, Function Code 38, or by resetting each of the values individually. The draghand reset switch resets the draghands of the position indicator only, not TPI.

All TPI values are stored in a non-volatile memory. The present tap position value will go to invalid “----” if the following condition is detected. The present tap position is “O” (neutral) but no neutral signal is detected. This condition will occur if a replacement control with present tap position set to “O” is installed on a regulator which is not in the neutral position. If the TPI function detects a successful upward tap and the prior value of FC 12 was “16”, or a successful downward tap is detected and the prior value of FC 12 was “–16” the prior value will be maintained. These conditions could occur if the present tap position was manually set incorrectly.

The following relates the action of the diagnostics routine with regard to the Tap Position Indication function only. See page 2-5 for the list of other reasons which would cause diagnostics to report FAIL.

The display will show FAIL upon power-up under these circumstances: 1) the present tap position value prior to power-up is “---” (invalid) and the regulator is not in neutral position. 2) The present tap position prior to power-up is 0 and the regulator is not in the neutral position. This condition will cause the present tap position value to go to invalid (“----”). 3) During automatic or manual operation the present tap position changes to 0, but a neutral signal is not received. In all of these cases, the value at Function Code 95, Systems Status, is set to “10”, “TPI - NO NEUTRAL SYNC - WARNING”.

The display will show PASS upon power-up under the following circumstances: 1) The present tap position is not 0 and the regulator is not in neutral. 2) The regulator is in neutral.

Reverse Power Operation

Most voltage regulators are installed in circuits with well-defined power flow from source to load. However, some circuits have interconnection or loops in which the direction of power flow through the regulator may change. For optimum utility system performance, a regulator installed on such a circuit should have the capability of detecting reverse power flow, and of sensing and controlling the voltage, regardless of the power flow direction.

The control has full reverse power capabilities, but for fully automatic reverse operation the source voltage or source-to-load differential voltage must be supplied to the control in addition to the load voltage. Regulators may be ordered direct from the factory with an internal (source-to-load) series winding P.T., or an external source-side P.T. may be installed in the field. In either case, a second Ratio Correcting Transformer (RCT) on the control back panel is required for proper correction of the source voltage if the external source side P.T. has a voltage other than 120V. Regulators with factory installed series winding P.T.s also have the second RCT installed at the factory.

Some field installations may require that a source voltage P.T. be used instead of the series winding P.T. which is the standard technique used on the McGraw-Edison voltage regulator. The control is designed such that it can be configured for this application also. This reconfiguration is accomplished by removing the back shield and moving a soldered jumper from one set of terminal posts marked V_{diff} to another set of terminals

marked V_{in}. The software of the control then recognizes this differential/source voltage as a source voltage, and will function accordingly.

The CL-5C and later generation controls have the ability to calculate the source side voltage without a series winding P.T.. When this feature is turned on, the control will use the load voltage from the main P.T., the regulator type (either straight, also known as ANSI type A, or inverted, also known as ANSI type B), the tap position and the internal impedance of the regulator to calculate the source side voltage. This source voltage is with ±1.5% of actual. With the source voltage P.T. the accuracy improves to ±1%. Only the regulator type needs to be programmed into the control. The other values are already available to the control.

The control offers seven different response characteristics for reverse power detection and operation. These characteristics are user selectable by programming Function Code 56. The seven modes, and their corresponding codes are:

0 = Locked Forward, 1 = Locked Reverse
2 = Reverse Idle, 3 = Bi-directional
4 = Neutral Idle, 5 = Co-generation
6 = Reactive Bi-directional

This section will separately explain each mode of operation. Since the control retains the reverse metered demand values separate from the forward metered values, the metering will also be explained for each mode.

In determining power direction, the control senses the real component of the current (except in reactive bi-directional mode), and then determines the current direction and magnitude in that direction. When the conditions indicate the power is flowing in reverse, the following parameters assume new values and the control operation is affected accordingly:

Load Voltage - Now sensed from what was previously the source voltage supply.

Source Voltage - Now sensed from what was previously the load voltage supply.

Load Current - In the forward direction, the current is used directly as measured. In the reverse direction, the current is scaled to reflect the ratio difference between the source and load side of the regulator, according to this formula:

$$\text{Reverse Load Current} = \frac{\left(\text{Forward Load Current}\right)\left(\text{Source Voltage Supply}\right)}{\text{Load Voltage Supply}}$$

where source voltage supply and load voltage supply are in the reverse direction.

kVA, kW, kvar, and % buck/boost are now calculated based upon the new metered reverse values.

Locked Forward Mode

Function Code 56 = 0. No source voltage is required. This mode is not intended to be used in applications where reverse power flow is possible.

METERING: Always operates in the forward direction, regardless of power flow direction. If reverse power occurs, the metering functions remain on the normal load side of the regulator—no reverse demand readings will occur.

OPERATION: (Figure 4-2) Always operates in the forward direction. This allows operation down to zero current conditions since there is no forward threshold involved. A safeguard has been built into the control to prevent misoperation in the event reverse power flow does occur. If more than 2% (.004 A C.T. secondary) reverse current occurs, the control idles on the last tap position held, and the band edge indicators will turn off. As the current flow returns to a level above this reverse threshold, normal forward operation resumes.

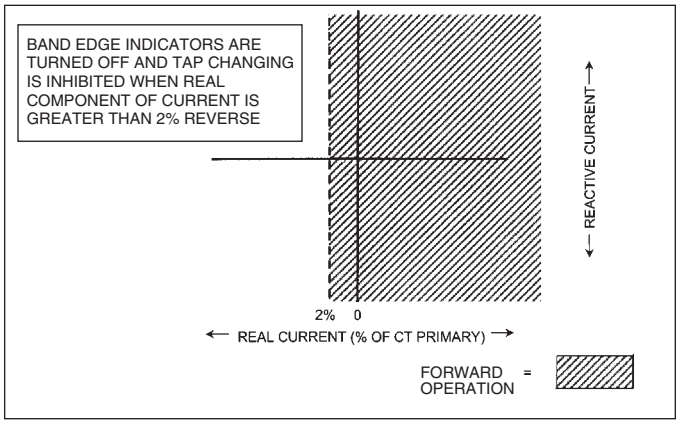

Figure 4-2.
Locked forward mode operation

Locked Reverse Mode

Function Code 56 = 1. Source voltage is required. This mode is not intended to be used in applications where forward power flow is possible.

METERING: Always operates in the reverse direction, regardless of power flow direction. If forward power occurs, the metering functions remain on the source (S bushing) side of the regulator — no forward demand readings will occur.

OPERATION: (Figure 4-3.) Always operates in the reverse direction using the reverse settings at Function Codes 51, 52, 53, 54 and 55. This allows operation down to zero current conditions since there is no reverse threshold involved. A safeguard has been built into the control to prevent misoperation in the event forward power flow does occur. If more than 2% (.004 A C.T. secondary) forward current occurs, the control idles on the last tap position held, and the band edge indicators will turn off. As the current flow returns to a level above this forward threshold, normal reverse operation resumes. (See Figure 4-3.)

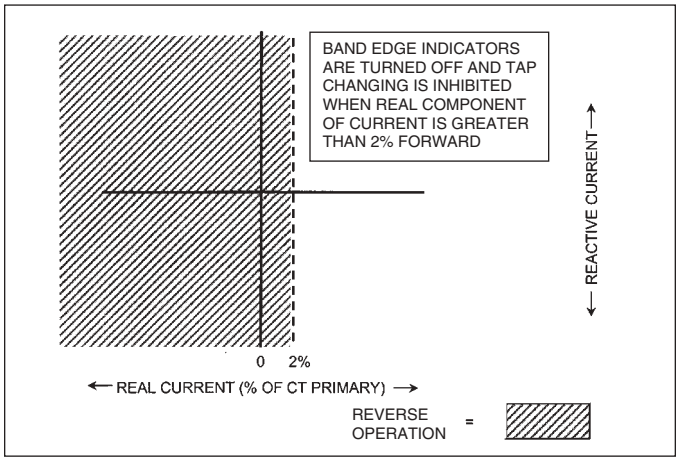

Figure 4-3.
Locked reverse mode operation

Reverse Idle Mode

Function Code 56 = 2. Source voltage required for metering only. This mode is recommended for installation where reverse power flow may occur, but a source voltage is not available.

METERING: (Figure 4-4.) A threshold level of 1% (.002 A) of the full load C.T. secondary current (.200 A) is used in setting the power direction. The metering will be forward until the current exceeds the 1% threshold in the reverse direction. At this time, the various parameters use the reverse settings, and the REV PWR annunciator turns on. The control continues metering in reverse until the current exceeds the 1% threshold in the forward direction, and then the parameter scaling reverts back to normal and the REV PWR annunciator turns off. If the source or differential P.T. is not installed, reverse metering will not be available, but all other metering operations remain the same. If the P.T. is installed, metering will be per Figure 4-6.

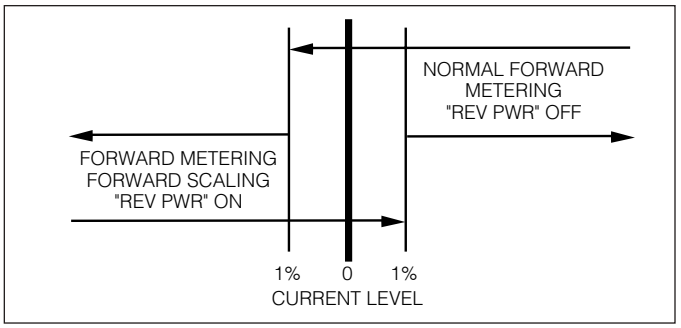

Figure 4-4.
Reverse idle metering without source voltage

OPERATION: (Figure 4-5.) The threshold for which the control switches operation is programmable at Function Code 57 over the range 1 to 5% of the rated C.T. current. When the real component of the current is above this threshold, the control operates in the normal forward direction. When current falls below this threshold, all tap changing is inhibited. The control idles on the last tap position held before the threshold was crossed. The operational timer (time delay) is reset on any excursion below this threshold, and the band edge indicators turn off.

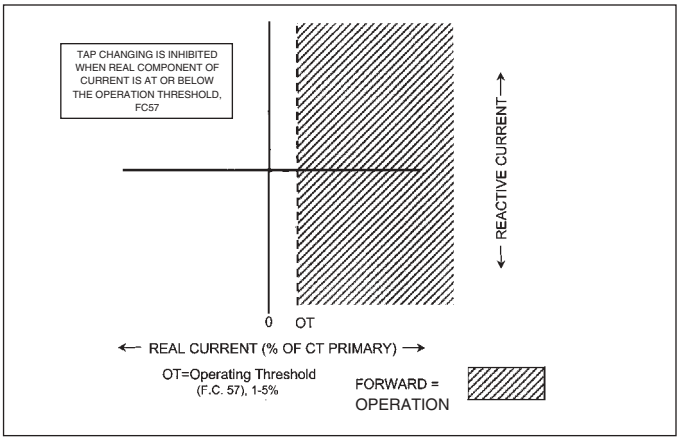

Figure 4-5.
Reverse idle mode operation

*Tap changing is inhibited and band edge indicators are turned off.

Bi-directional Mode

Function Code 56 = 3. Source voltage is required. This mode is recommended for all installations where reverse power flow may occur except where the source of reverse power is a co-generation facility or independent power producer.

METERING: (Figure 4-6.) A threshold level of 1% (.002 A) of the full load C.T. secondary current (.200 A) is used in setting the power direction. The metering will be

forward until the current exceeds the 1% threshold in the reverse direction. At this time the various parameters use the reverse settings, and the REV PWR annunciator turns on. The control continues metering in reverse until the current exceeds the 1% threshold in the forward direction, and then the parameter scaling reverts back to normal and the REV PWR annunciator turns off.

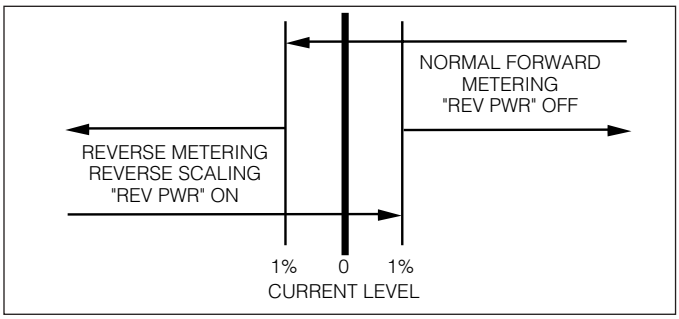

Figure 4-6.
Bi-directional, Neutral Idle and Reactive Bi-directional Metering

OPERATION: (Figure 4-7.)The control operates in the forward direction whenever the real component of the current is above the operator defined forward threshold (Function Code 57). The control operates in the reverse direction, using the reverse settings at Function Codes 51, 52, 53, 54 and 55, whenever the current is above the operator defined reverse threshold (Function Code 57). When the current is in the region between the two thresholds, the control idles on the last tap position held before the current fell below the threshold. The operational timer (time delay) is reset on any excursion below the threshold in either direction, and the band edge indicators turn off.

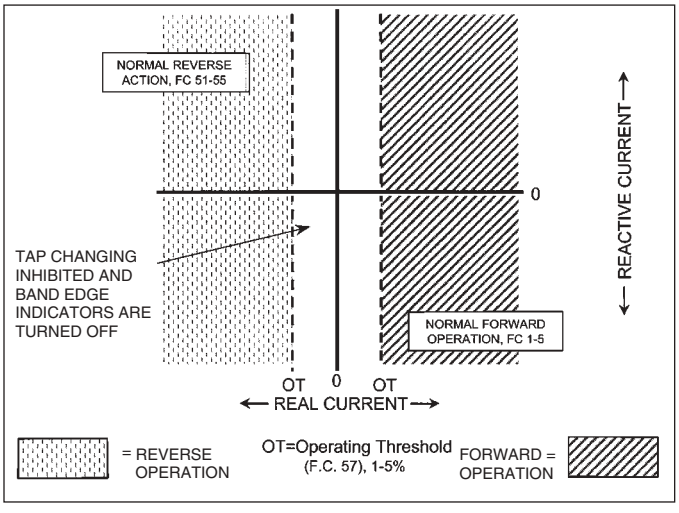

Figure 4-7.
Bi-directional mode operation

Neutral Idle Mode

Function Code 56 = 4. Source voltage is required.

METERING: (Figure 4-6.) A threshold level of 1% (.002 A) of the full load C.T. secondary current (.200 A) is used in setting the power direction. The metering will be forward until the current exceeds the 1% threshold in the reverse direction. At this time, the various parameters use the reverse settings, and the REV PWR annunciator turns on. The control continues metering in reverse until the current exceeds the 1% threshold in the forward direction, and then the parameter scaling reverts back to normal and the REV PWR annunciator turns off.

OPERATION: (Figure 4-8.) The control operates in the forward direction whenever the real component of the current is above the operation defined forward threshold (Function Code 57). When the current exceeds the operator defined reverse threshold (Function Code 57), and is held for 10 continuous seconds, the control will tap to neutral. Neutral position is determined as when the percent buck/boost is within ±.3% of 0. When the current is in the region between the two thresholds, the control idles on the last tap position held before the forward threshold was crossed. While tapping to the neutral position, if the current falls below the reverse threshold, the control continues to tap until neutral position is reached. The operational timer (time delay) is reset on any excursion below the forward threshold and the band edge indicators turn off.

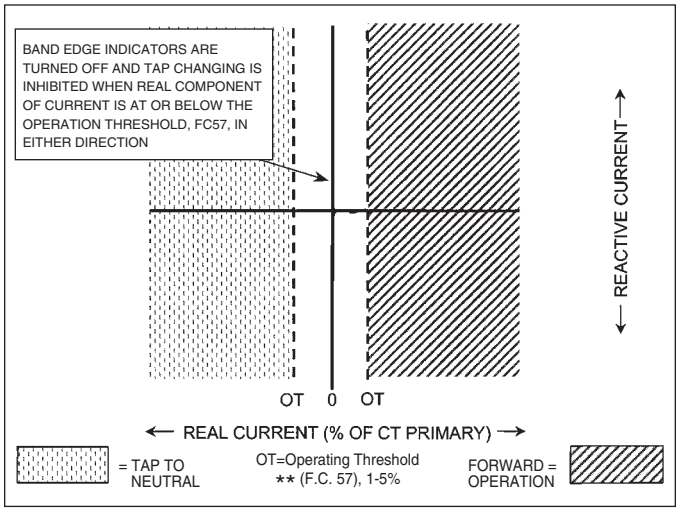

Figure 4-8.
Neutral idle mode operation

** Band edge indicators are turned off.

Co-generation Mode

Function Code 56 = 5. Source voltage is required.

In recent years, there have been a growing number of voltage regulator applications involving co-generation by the utilities' customers. The co-generation mode was developed for the McGraw-Edison control to satisfy the specialized needs of these applications. Normally, the desired operation of a regulator installed on a feeder involving co-generation is to regulate the voltage at the customer substation during times of power flow into the customer site, and to regulate the voltage at the regulator (on the same output side) during power flow into the utility grid. This is accomplished by simply not reversing the control sensing input voltage when reverse power is detected, and by altering the line drop compensation settings to account for this change in power flow direction. (See Figure 4-9.)

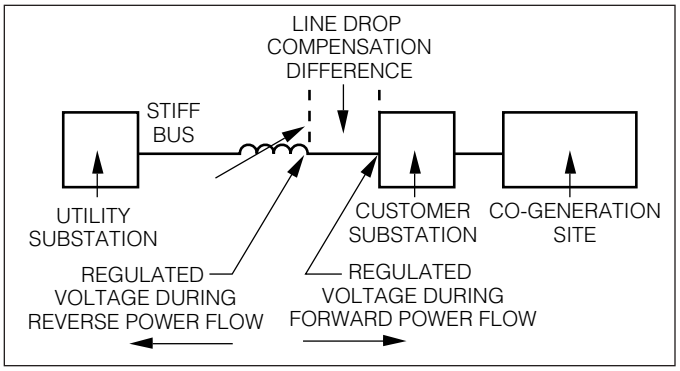

Figure 4-9.
Co-generation regulation points

METERING: (Figure 4-10.) Always operates in the forward direction except that load center voltage is calculated based upon the reverse line drop compensation settings (Function Codes 54 and 55), when the fixed 1% reverse metering threshold is exceeded. The REV PWR annunciator turns on when this reverse threshold is crossed. The forward line drop compensation settings (Function Codes 4 and 5) are used when the current exceeds the fixed 1% forward metering threshold. The demand values acquired during reverse power flow are stored as reverse metered data but the values are not scaled (to reflect the other side of the regulator) since the operating direction of the regulator never truly reverses.

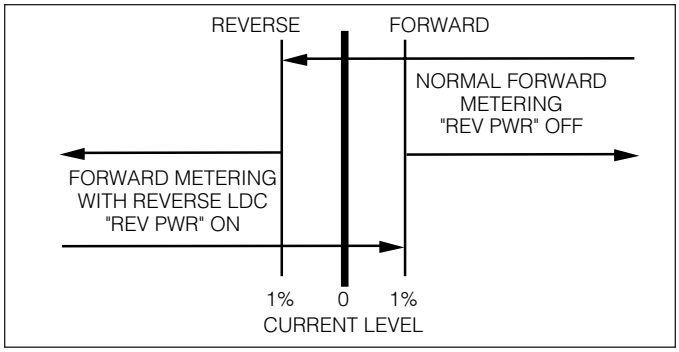

Figure 4-10.
Co-generation metering

OPERATION: (Figure 4-11.) The control always operates in the forward direction. The control will operate in the forward direction, but will use the reverse settings for line drop compensation when the real component of the current is above the fixed 1% reverse metering threshold. The control will continue to use the reverse line drop compensation settings until the real component of the current is above the fixed 1% forward metering threshold. The operational timer (time delay) is not reset on any transitions between the application of forward and reserve line drop compensation settings.

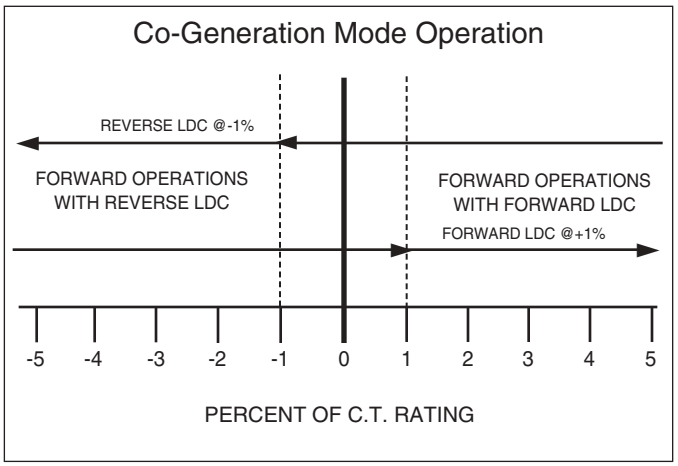

Figure 4-11.
Co-generation mode operation

Reactive Bi-Directional Mode

Function Code 56 = 6. Source voltage is required.

This mode is recommended for installations where reverse power flow may occur and the real component of the current is below the operator defined threshold (Function Code 57), except where the source of reverse power is a co-generation facility or independent power producer.

METERING: (Figure 4-6.) A threshold level of 1% (0.002 A) of the full load C.T. secondary current (0.200 A) is used in setting the power direction. The metering will be forward until the current exceeds the 1% threshold in the reverse direction. At this time, the various parameters use the reverse settings, and the REV PWR annunciator turns on. The control continues metering in reverse until the current exceeds the 1% threshold in the forward direction, and then the parameter scaling reverts back to the normal and REV PWR annunciator turns off.

OPERATION: (Figure 4-12.) The control determines which settings (forward/reverse) to use by sensing the real and reactive components of the current. The control operates in the forward direction whenever the magnitude of the reactive component of the current exceeds the operator defined threshold (Function Code 57) in the negative direction. The control also operates in the forward direction if the magnitude of the real component of the current exceeds the operator defined threshold (Function Code 57) in the positive direction while the magnitude of the reactive component of the current is between the operator-defined thresholds (Function Code 57). The control operates in the reverse direction using the reverse settings at Function Codes 51, 52, 53, 54, and 55, whenever the magnitude of the reactive component of the current exceeds the operator defined threshold (Function Code 57) in the positive direction. The control also operates in the reverse direction if the magnitude of the real component of the current exceeds the operator defined threshold (Function Code 57) in the negative direction while the magnitude of the reactive component of the current is between the operator defined thresholds (Function Code 57).

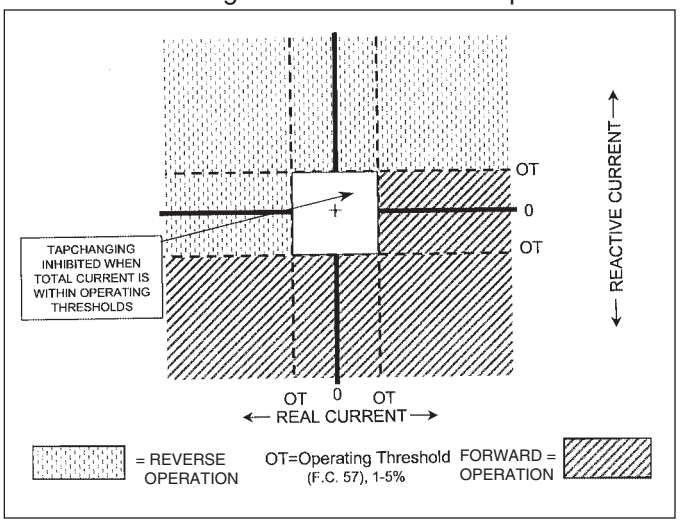

Figure 4-12.
Reactive bi-directional mode operation

Voltage Limiting

The voltage limiting accessory is used to place both a high and low limit on the output voltage of the regulator. When enabled, it operates in either the forward or reverse directions, and has the highest priority of all operating functions. Voltage limiting is overridden only by the operator taking local control, or by an inter-connected SCADA system. The purpose of the voltage limiter is to protect the consumer from abnormally high or low voltages resulting from:

- Large, rapid changes in transmission voltage
- Abnormal loading of the feeder
- Inaccurate regulator control settings (voltage level, bandwidth, and line drop compensation)
- Heavy loading by the first customer while there is a leading power factor on the feeder
- Light loading at the first customer with heavy loading on the feeder at the same time

The appropriate high and low limits for the output voltage can be programmed into the control at Function Codes 81 and 82, respectively. The accessory is then activated by accessing Function Code 80 and entering the appropriate code for the desired operation: 0 = off; 1 = high-voltage limiting only; 2 = both high and low limiting. If low-voltage limiting only is desired, Function Code 80 should be set to 2 to enable this limit, and the value programmed into Function Code 81 for the high limit can be set to some extreme number (such as 135) to prevent the high limit from activating.

The control has two response sensitivities. If the output voltage exceeds either the high or low limit by 3 V or more, the control samples the voltage for two seconds and then taps immediately to bring the voltage to the limit value. If the output voltage exceeds either the high or low limit by less than 3 V, the control samples the voltage for 10 seconds then taps to bring the voltage to the limit value. The 10 second delay is used to prevent false responses to transient conditions. The control uses the sequential method of tapping, a two second pause between taps for voltage sampling, when bringing the voltage back to the limit value. HIGH and LOW annunciators in the display indicate when either limit is active.

To avoid potential cycling of the regulator, set the high- and low-voltage limits at least two volts above and below the upper and lower bandwidth limits. This will establish a “grey zone” between the high-and low-voltage limits and the upper and lower bandwidth limits. When the output voltage is within this “grey zone,” the control will not perform any tap changes that would take the output voltage closer to the limit. If the voltage is directly on the inner edge of the grey zone, the control will allow one tap change to permit the voltage to enter the grey zone by as much as 0.7 V.

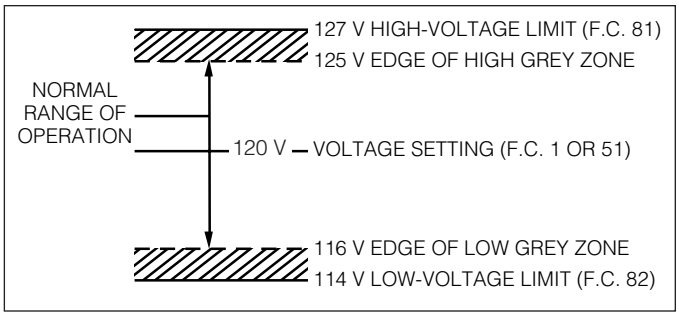

Figure 4-13.
Voltage limiting grey zones

Voltage Reduction

An ideal application for system load management is at the distribution voltage regulator. Voltage reduction capabilities within the regulator control permit it to trigger the regulator to reduce voltage during situations where power demands surpass the available capacity, and where there are extraordinary peak loads. The control offers three modes of voltage reduction: local/digital remote, analog remote, and pulse. All modes operate for forward or reverse power flow conditions.

For the CL-5E control, a tap-to-neutral option has been added to the Voltage Reduction function. This feature may be employed regardless of the voltage reduction mode selected. To activate this feature, it must be enabled via Function Code 70, and 120 V ac must be applied to Terminals 1 and 2 of TB_2. When tap-to-neutral is enabled, the third voltage reduction level of Analog Remote (Latching), (Function Code 75), is disabled. If tap-to-neutral is not used, then Function codes 73, 74, and 75 all work as normal. All voltage reduction modes of the control work by calculating an effective set voltage as follows:

Effective Set Voltage = Set Voltage x (1- (percent reduction))

EXAMPLE: If the set voltage = 123 V and voltage reduction of 4.6% is active, the regulator will regulate the compensated voltage to 117.3 V, that is, tap down 5.7 V.

When any mode of voltage reduction is in effect, the V. RED. annunciator segment is turned on. Voltage reduction occurs after timeout, as established by the time delay, Function Code 3 or 53, and the Control Operating Mode, Function Code 42. The percent reduction in effect is displayed at Function Code 71.

Local/Digital Remote Mode

Function Code 70 = 1 (or 11 for CL-5E).

Voltage reduction can be performed by selecting the Local/Digital Remote mode of operation (Function Code 70 = 1), and then entering into Function Code 72 the amount of reduction required as a percentage of the set voltage. To turn voltage reduction off set function Code 70 to 0.

Remote (Latching) and Pulse Mode

The remote latching and pulse mode of voltage reduction will be discussed in Analog SCADA.

Supervisory Control and Data Acquisition (SCADA)

With its tap changer, potential transformer and current transformer, the regulator is a likely candidate for a Supervisory Control and Data Acquisition system where the utility needs to have centralized voltage control for peak shaving, energy conservation or other purposes. For many years regulators have been connected to analog SCADA systems where the regulator is controlled by contact closure and the feedback is via a voltage transducer connected to the voltage sensing circuit of the regulator control. Regulators are still being installed where the link between the regulator control and the remote terminal unit (RTU) is analog.

The control has a number of features which allow it to function well on these types of systems. For details, see Analog SCADA, following.

With the advent of microprocessor-based controls such as the McGraw-Edison 4 and 5 Series controls, two-way real-time digital communication with the regulator control is now possible. The CL-5C and subsequent controls are specifically designed for this type of system. For details, see Digital SCADA, page 4-11.

The control is also well suited to the user who does not have a SCADA system, but does have a need for detailed information about the bus or feeder loading. See Data Retrieval and Settings Upload, page 4-12.

Analog SCADA

Built-in Voltage Reduction

This is a continuation of the Voltage Reduction discussion. During voltage reduction the control remains in the Automatic mode. See Figure 4-14 which shows the left-most section of TB_2, the bottom terminal board on the back panel. For either of the two modes described next, Remote Latching and Pulse, a nominal 125 V ac needs to be supplied to either or both terminals, 1 and 2. If the user supplies dry contacts, the voltage should be obtained from terminal V_9. V_9 voltage is only available when the control switch is in the auto/remote position. If the user supplies wet contacts, the connections should be as shown in Figure 4-15. Note that J is connected at the factory to the control ground.

Analog Remote (Latching) Mode

Function Code 70 = 2 (or 12 for CL-5E).

Up to three independent values of voltage reduction (VR) are possible. Levels 1, 2 and 3 are programmed at

Function Codes 73, 74 and 75 respectively. As shown in Table 4-3, latching contact 1 activates the VR programmed at Function Code 73, latching contact 2 activates the VR programmed at Function Code 74, and latching both contacts activates the VR programmed at Function Code 75. Each of these function codes may be set from 0.1 to 10.0%.

TABLE 4-3
Voltage Regulator Latching Contacts

Latch Closed at These Contacts	Function Code To Activate Voltage Reduction
1	73
2	74
1 & 2*	75

* Automatic Tap to Neutral for CL-5E, if FC70 is set to values 10, 11, 12 or 13

Pulse Mode

Function Code 70 = 3 (or 13 for CL-5E)

The same terminals and contacts are used for this mode as shown in Figures 4-14 and 4-15, but the contacts are pulsed (momentarily closed) rather than latched closed. Each closure and waiting period between closures is expected to be at least 0.25 seconds in duration.

The number of steps of pulsed reduction, up to 10, is programmed at Function Code 76. The percent reduction per step is programmed at Function Code 77. Starting at zero percent reduction, every time the contact 1 is pulsed, one step of reduction is added to the accumulated total. EXAMPLE: If the number of steps is 3, and the percent per step is 1.5%, four successive pulses of contact 1 will cause the following percentages of reduction: 1.5, 3.0, 4.5, 0. Pulsing to one step higher than the programmed number returns the reduction to zero. Also, any time contact 2 is pulsed the reduction returns to zero.

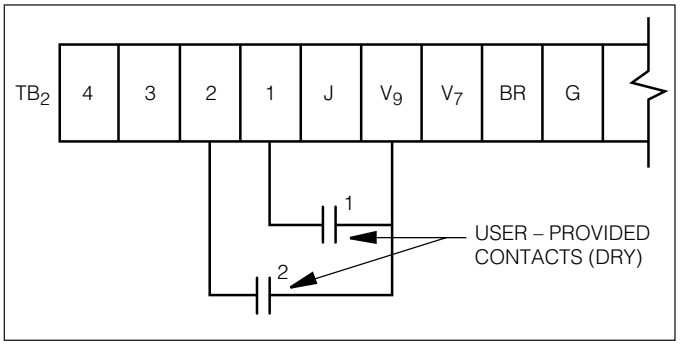

Figure 4-14.
Dry contact connections for Remote Latching and Pulse Modes

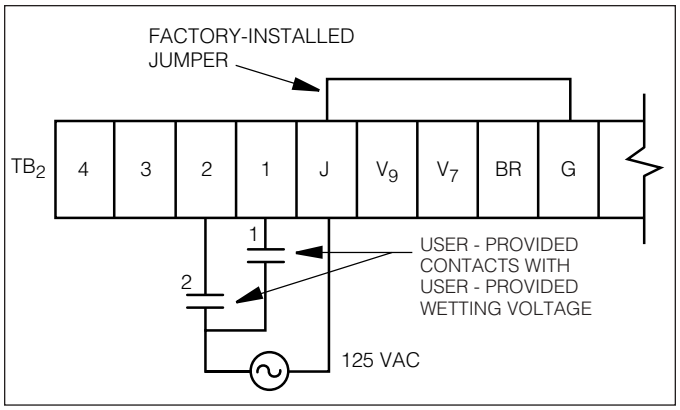

Figure 4-15.
Wet contact connections for Remote Latching and Pulse Modes

SOFT ADD-AMP

This feature (Function Code 79) allows the user to set the regulator for ADD-AMP locally at the control as well as remotely through SCADA. The SOFT ADD-AMP limits can be overridden by a local operator running the tap changer in manual mode of operation. This is not the case for the “hard” ADD-AMP limit switches on the position indicator face.

Remote Motor Control & Auto Inhibit

Terminal board TB_8, located below RCT_1 on the control back panel, is supplied for user connections for Auto Inhibit (blocking) and Motor Control. See Figure 4-16. When the motor is controlled remotely, it is necessary to inhibit automatic operation. To control Auto Inhibit remotely, remove the jumper between terminals 4 and 5 and connect normally-closed contacts. Latching open those contacts inhibits automatic operation.

To remotely raise or lower the tap changer, the appropriate set of contacts is momentarily closed. An optional SCADA relay (current relay) is recommended if there is any chance that the raise and lower contacts may be closed simultaneously. If user-provided interposing relays are used, such that raise and lower contact closure cannot occur simultaneously, then the SCADA relay is not required. If the SCADA relay is not used, then the operator should make a permanent connection from TB_2-V_9 to TB_8-2.

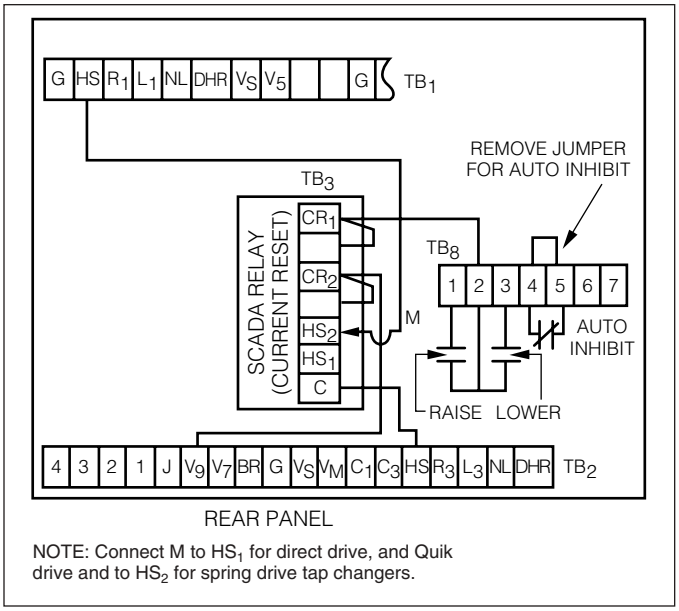

Figure 4-16.
Auto inhibit and remote motor control connections

Transducer Connections

Refer to Figure 6-5, page 6-11 . To monitor the load voltage (forward direction), a transducer, nominal 120 V ac input, may be connected as follows: Connect the transducer hot lead to terminal V_4 on TB_1 and its ground lead to G on TB_1. A current transducer, 200 mA input, may be connected as follows: Close knife switch C. Remove the jumper between C_2 and C_4 on TB_1. Connect the transducer hot lead to C_2 and its ground lead to C_4. Open knife switch C.

Fooler Voltage Scheme

Using this method, the voltage sensed by the control is raised, thereby “fooling” the control into reducing the voltage during its normal automatic operation. This method can be used with all CL-5 Series controls. A VR module, as shown in Figure 4-17, is usually supplied by the Remote Terminal Unit manufacturer. The VR module is usually a tapped auto-transformer with a pulse-activated indexing relay. When connected to the control back panel as shown, the voltage sensed by the control is raised as the module is pulsed to higher taps.

Since this method keeps the control in automatic operation, Auto Inhibiting is not used. An advantage of this method is that it can be applied to many different models of controls from many manufacturers. A disadvantage of this method is that while VR is activated, the measured load voltage is incorrect, as are all other calculated metering values which use the load voltage. To avoid the effects of metering inaccuracy, we recommend that the CL-5 Series Pulse Mode of VR be used.

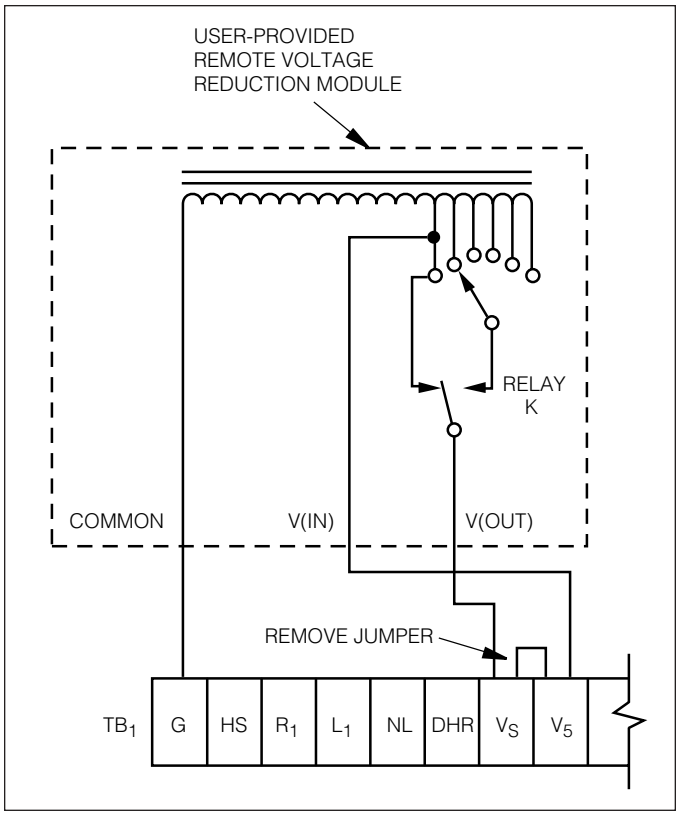

Figure 4-17.
Typical user provided “Fooler Voltage” module

Digital Scada

Communication Protocols

The standard communications protocol used by the CL-5 Series control is C.P.S. DATA 2179. This protocol is resident in the control, therefore a DATA 2179 protocol conversion board is not required by the CL-5 Series control.

Physical Interface

The Communications Channel #2 physical connections are made to an interface board, which is mounted to the control back panel. The interface board can be factory installed or field installed. The board mounts to predrilled holes in the back panel provided on C.P.S. regulator controls since 1989 for the installation of this or other devices. A communications cable connects the interface board to the CL-5 Series communications port.

For connection to an RTU, where the distance between the control and the RTU is typically long, a fiber-optic interface board is recommended for surge isolation. For installations where the interface board is close-coupled to another device, such as a telephone modem or radio, interface boards other than fiber-optic type will be made available.

Local Operator Security

Through the communications channel, the SCADA master may read the CL-5 Series data points, write to certain data points, or reset certain data points. The technique of writing to a data point is used for performing operations such as changing settings like Set Voltage or Reverse Power Mode, or inhibiting automatic operation or controlling the tap changer motor, etc. Following is a discussion of the levels of security used to protect the local operator.

Fiber-optic/RS232 and Fiber-optic/Modem Interface Boards

2197 interface boards can be ordered either 1) equipped for Fiber-optic/RS232 capabilities or 2) equipped for Fiber-optic/Modem capabilities. The interface boards are equipped with provisions for a 3.6 volt lithium cell battery for back-up power. To maximize battery life, no battery is supplied with the unit. If a back-up battery is not installed, loss of power to the interface board will inhibit all SCADA activity with the specific control, and with other controls connected in a loop.

Fiber-optic/RS232 interface boards can communicate via SCADA. The fiber-optic option can be used in a loop or star application. The RS232 option can only be used in a star application.

Fiber-optic/modem interface boards can also communicate via SCADA. The modem option can be used in both loop and star applications. The fiber-optic option is meant to be used only to loop controls.

Supervisory Switch

The CL-5 Series controls are equipped with a Supervisory on/off switch. When this switch is in the on position, SCADA may perform the normal read, write and reset activity. When the switch is in the off position, SCADA may only read the database. This affords protection to the local operator at the front panel, while allowing the system operator to maintain surveillance.

Control Switch

If the local operator switches the control switch (auto/remote-off-manual) to either off or manual, the control internal circuitry prohibits SCADA from controlling the tap changer motor. Resets and other writes are allowed.

Active Control Security Level

If the local operator changes the control active security level to level 1 or above, or security override is set to override 1 or higher, this does not inhibit any SCADA activity. To inhibit SCADA writes and resets the local operator should turn the Supervisory switch to off.

NOTE: A local operator wishing to check automatic operation should check to make sure that the Blocking Status, Function Code 69, is set to normal (0).

NOTE: Changes to any of the communications parameters, Function Codes 60-68 take effect immediately, as compared to the CL-4C which required that the power be turned off, then on, to reset those parameters on the separate protocol communications board.

Data Retrieval and Settings Uploading

The communications #1 channel of the CL-5 Series control is dedicated to the 9-pin D-subminiature connector located on the control front panel, labeled Data Port. The Data Port is designed to interface with the McGraw-Edison Data Reader, a handheld, battery-operated data gathering device. See page 7-1 for details on the Data Reader Kit. With the Data Reader the entire control data base may be downloaded for transfer to a personal computer. Analysis of the “reading” from the control, using the Data Reader Program (included in the Data Reader Kit) allows the user to verify the control settings and analyze the conditions of the feeder as follows:

1) at the moment of the downloading (instantaneous metering), 2) maximum and minimum demand values since last reset (time-tagged demand metering), and 3) the profile of salient parameters (profile recorder).

The Channel #1 baud rate is selectable at 300, 1200, 2400 and 4800 Baud. However, to permit communications with the McGraw-Edison Data Reader, the Channel 1 baud rate is set at the factory to 4800 Baud.

Temporary connection to the Data Port may also be made with an IBM-compatible personal computer. A PC-based program, the CL-5 Interface Program, allows the local operator to 1) download the control data in a similar fashion as the Data Reader, 2) reset all metering and tap position maximum and minimum values, and upload settings which are specific to the control I.D. number. For CL-4 and CL-5 Series control readings which were obtained with the Data Reader or the Interface Program, the Interface Program also allows the user to view the data and to print custom reports.

Tap Changer

Tap Changer Operation

Spring- and Direct-drive Tap Changers

Regulators for low-current applications use stored energy spring-drive tap changers, most commonly on ratings 219 A and below. The tap changer for a specific rating is shown on the rating plate. Figures 5-1 (95 kV BIL and below) and 5-2 (150 kV BIL) illustrate typical spring-drive mechanisms.

Voltage regulators used in medium- and high-current applications employ direct or Quik-drive tap changers. Direct-drive tap changers are commonly applied above 219 A. The model 770B (Figure 5-3), 660C (Figure 5-4), and T875 (Figure 5-5) are rated 150 kV BIL.

Figure 5-1.
928D Spring-drive Tap Changer

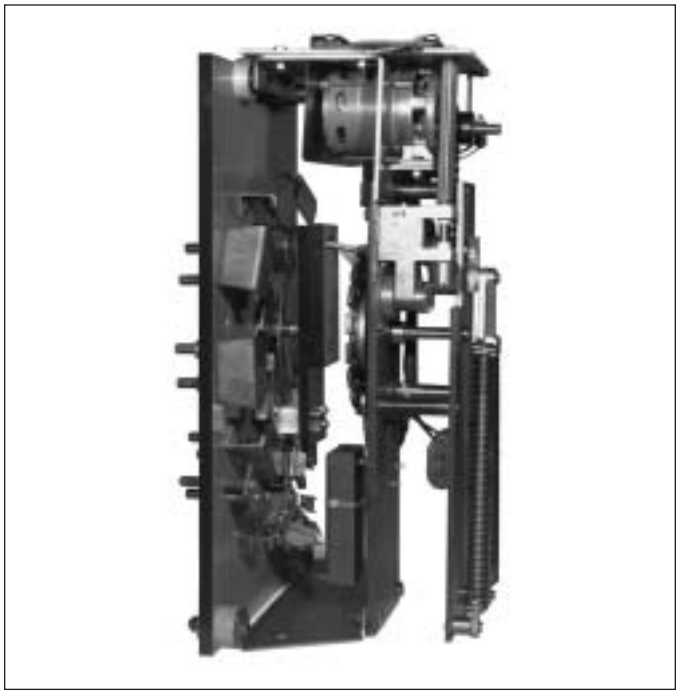

Figure 5-2.
170C Spring-drive Tap Changer

Motor

The motor for the spring-drive and direct-drive tap changer is a capacitor-start, reversing gear-motor suitable for operation at 120 V ac, single-phase, at 50/60 Hz. An integral braking mechanism controls motor coast.

The motor for the Quik-drive tap changers is a capacitor-start, high-torque, reversing, gear-motor rated 120 V ac, single-phase, at 50/60 Hz, with a spring-loaded disc brake mechanism located on the tap changer.

All components are compatible with hot transformer oil and the windings are oil cooled. The motor will carry locked-rotor current for at least 720 hours.

Reversing Switch

The reversing switch function changes the polarity of the tapped winding. When the spring-drive tap changer is in the neutral position, the reversing switch is open. When the direct-drive tap changer is in the neutral position, the reversing movable contact assembly is in contact with the lower reversing stationary contact (V_L).

The load current on all types is carried by the source bushing, the reactor, slip rings, main movable contacts, neutral stationary contact and the load bushing.

The reversing switch motion on the spring-drive tap changer occurs as the main movable contacts enter or leave the neutral position. A pin in the contact drive sprocket assembly engages a slot in the reversing segment when the main switch is in the neutral position. The first tap step in either direction rotates the segment and the reversing switch engages the appropriate reversing stationary.

The drive sprocket pin and reversing segment provide a mechanical stop located approximately 320° on either side of neutral. When the pin engages the end of the

segment, the spring-drive mechanism will be loaded and the segment is locked to prevent any further motion in that direction.

The reversing switch motion on the direct-drive tap changers occurs as the main movable contact goes from neutral to the first raise position. On the Model 770B tap changer, a roller on the back side of the rear roller plate engages a slot in the reversing segment on the reversing insulating arm. On the Model 660C tap changer, a pinion, mounted on the same shaft as the rear roller plate, engages a slot in the reversing segment on the reversing insulating arm. As the rear roller plate rotates, the reversing movable contacts are driven from the VL reversing stationary contact to the VR contact.

Spring-drive Mechanism

Two steel extension springs are arranged in a triangular configuration to provide positive spring-over-center action to move the switch contacts. The mechanism is adjusted for smooth make-and-break contact action.

Direct-drive Mechanism

The 770B and 660C tap changers employ drive mechanisms based upon the same design principle, and many components are interchangeable. The motor turns a geneva pinion three complete revolutions per tap change. The motion of the geneva pinion turns a six-tooth geneva gear, a main drive shaft, and a scroll cam 180° per tap change. Each 180° movement of the scroll cam operates one of two roller plates and moves the corresponding main movable contacts 40°. The combination of geneva gearing and scroll cam characteristics results in a three-step, wipe/transfer/wipe contact action.

Attached to the main (geneva gear) drive shaft is a planetary gear-type mechanical stop which prevents contact motion beyond the maximum raise and lower positions.

Quik-drive Mechanism

The T875 tap changer is also a direct drive type. Once a tap change is initiated a holding switch energizes the motor through a separate circuit until the indexing motion is completed. The indexing occurs very fast. The total elapsed time to complete the action is 250 milliseconds from the time the indexing signal is started by the control. The motor turns a geneva gear pinion through a chain drive. Each full turn of the pinion rotates the geneva gear 20 degrees. The moving contacts are mounted on an insulating board that is rotationally attached to the geneva gear. This direct connection achieves accurate indexing of the contacts.

A friction brake arrests the inertia of the system once the tap change is completed. The brake is disengaged

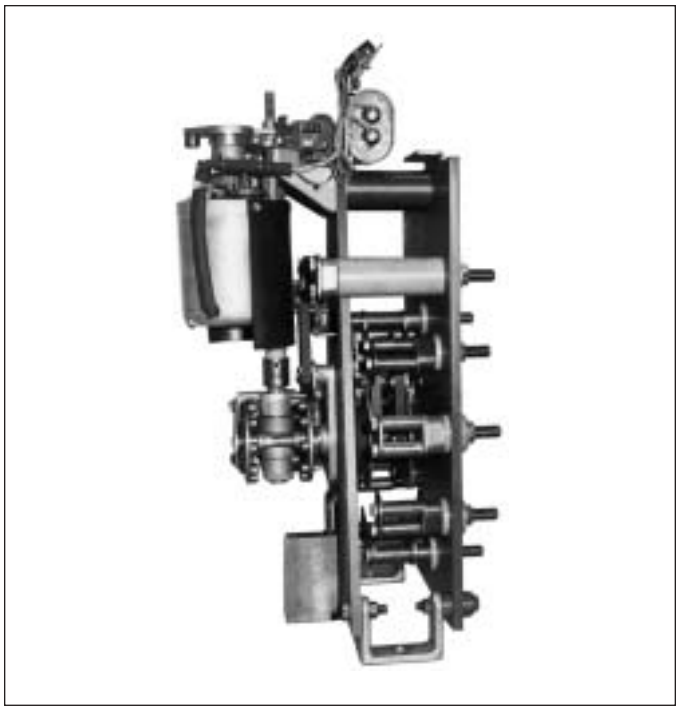

Figure 5-3.
770B Direct-drive Tap Changer

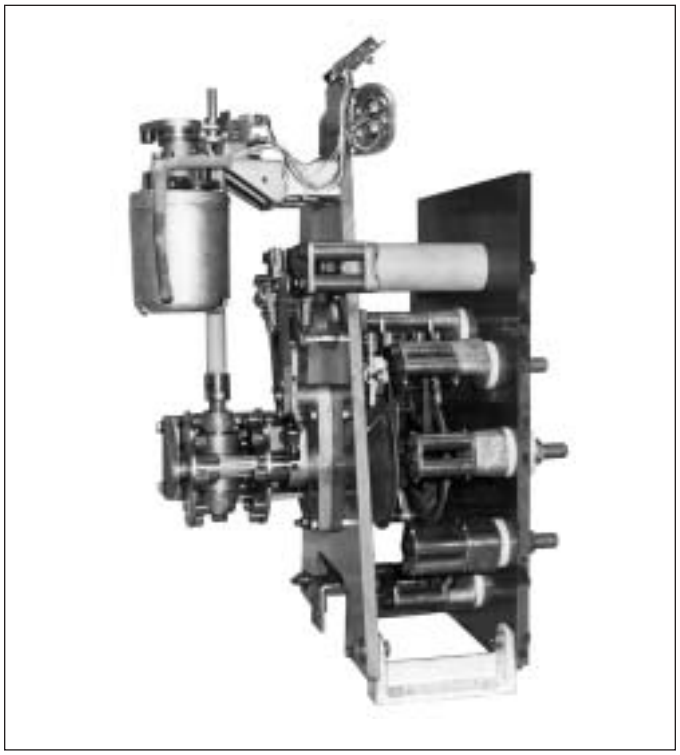

Figure 5-4.
660C Direct-drive Tap Changer

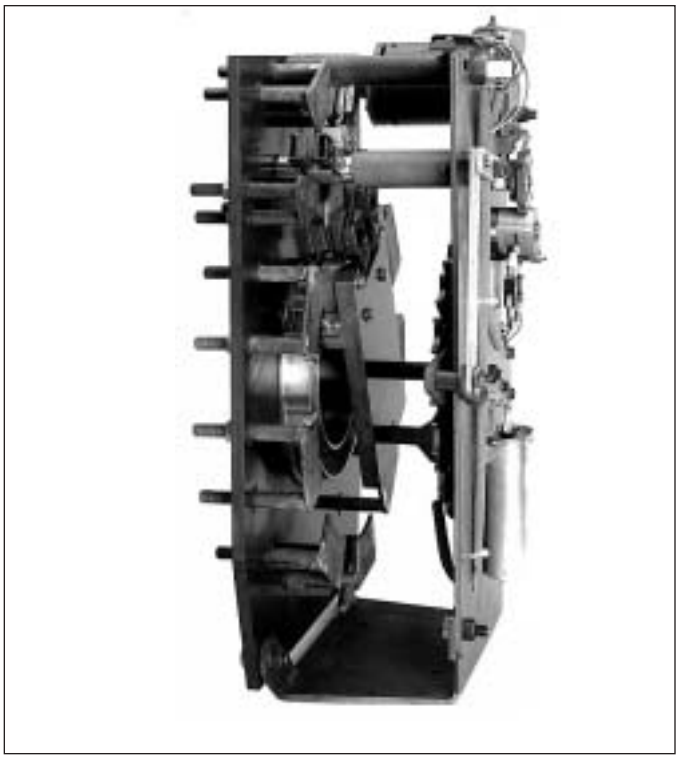

Figure 5-5.
T875 Quik-drive Tap Changer

during the indexing motion. A mechanical stop prevents rotation of the geneva beyond the maximum position.

Contacts

Several connection conditions are satisfied by the variety of contact structures. They are divided into arcing and non-arcing.

The non-arcing contacts consist of front and rear slip rings which serve as the connection point for opposite ends of the reactor windings and one end of the two main movable contacts. All contact surfaces are Electrical Tough Pitch (ETP) copper and all joints are riveted, bolted, or brazed to maintain a high-conductivity current path. Contact pressure between moving points is maintained by steel leaf springs (in the spring-drive tap changers) or by opposing steel compression springs (in the direct-drive and Quick-drive tap changers). The main movable contact is split to make contact on both surfaces of the slip ring and to resist separation in the event of high-current surges.

There are several types of arcing contacts on a regulator tap changer. They can be divided into two categories, stationary and movable.

1. The main stationary contacts are connected to the series-winding taps. The main movable contacts connect the slip rings to the main stationary contacts.
2. The reversing stationary contacts are connected to opposite ends of the series winding. The reversing movable contacts connect the neutral stationary contacts and load bushing to the reversing stationary contact.

NOTE: The neutral stationary contact in the direct-drive tap changer has both arcing and non-arcing contact conditions.

All stationary contact bodies are made of ETP copper. Copper-tungsten inserts are brazed to the edges of the stationary contacts since those contacts are subject to damage from impact or arcing duty. The main movable contacts are constructed of a copper-tungsten. The movable contacts are split to make connection on both sides of the stationary contacts. This split resists separation in the event of high-current surges.

The tap changer stationary contact body is copper. The reversing movable contacts are the same construction as the main movable contact.

Silver tungsten is used for movable contacts in high-current applications.

Contact erosion is a function of many variables such as system parameters voltage, load current, power factor, reactor design and main winding design.

Stationary contacts should be replaced before the arcing inserts erode to the point where there may be burning on the copper. Movable contacts should be replaced when approximately 1/8 inch of smooth surface remains. Refer to S225-10-2 for complete information and typical erosion patterns for the various stages of contact life.

Spring-drive Operating Sequence

When the spring-drive switch is in the neutral position and the control calls for a tap change, the following events occur:

1. Motor brake releases and motor starts.
2. Motor holding switch closes, assuring that one tap change will be completed.
3. The up-slope of sprocket cam engages a lip of the spool. This lifts the pin in the pin cam and frees it from the hole in the actuator.
4. A projection on the sprocket cam contacts a leg on the pin cam, and both turn.
5. Drive shaft, which is attached to the pin cam, begins to turn the crank arm and the springs begin to extend.
6. Pin comes free from the lip on the spool and a spring pushes it against the surface actuator.
7. Down-slope of sprocket cam returns the spool to the start position.

8. Pin drops into the hole in the actuator 180° from the start position.
9. At this point, the crank arm is at top dead-center and the springs are fully loaded. Drive shaft and crank arm, sprocket cam, pin cam and actuator are locked together and connected through the chain to the motor.
10. Motor drives all parts beyond top dead center.
11. Spring unloads, instantaneously pulling pin cam and actuator through 180° at high speed. Pins on the actuator cause the contact drive sprocket to index one tap position.
12. As the contact drive sprocket moves, it imparts motion to the reversing switch segment and main movable contacts. This action closes the reversing movable and reversing stationary contacts and drives the main movable contact onto the adjacent main stationary contact. Also, the neutral light switch opens.
13. Motor continues to turn the sprocket cam until the motor holding switch opens. The gear motor output shaft has completed one revolution.

Should more than one tap change be required, the proceeding sequence will be repeated (except reversing switch portion) until the control is satisfied or the limit switch in the position indicator is reached.

Direct-drive Operating Sequence

When the switch is in neutral and the control calls for a tap change in the raise direction, the following events occur:

1. Motor brake releases and motor starts.
2. Geneva pinion rotates counter-clockwise to engage the geneva gear.
3. Geneva pinion drives the geneva gear, main drive shaft, and scroll cam through 60° and produces initial wipe action at the front main movable contact and reversing movable contacts.
4. Motor holding switch closes, assuring that one tap change will be completed.
5. Geneva pinion completes first revolution and continues to rotate.
6. Geneva pinion drives the geneva gear through 60° and the scroll cam and roller plates transfer the front main movable contacts from the neutral stationary contact N to the stationary contact No. 1. Simultaneously, the reversing movable contact is transferred from the reversing stationary contact (VL) to the stationary contact (VR).
7. Neutral light switch opens.
8. Geneva pinion completes second revolution and continues to rotate.
9. Geneva pinion drives the geneva gear, main drive shaft, and scroll cam through 60° and produces final wipe action at the front main movable and reversing movable contacts.
10. Motor holding switch opens.
11. Motor brake engages.
12. Motor stops.

A tap change from No. 1 raise position to neutral will be accomplished as described, except the geneva pinion will rotate clockwise. The reversing movable contact will be transferred from the reversing stationary contact (VR) to the stationary contact (VL).

Quik-drive Operating Sequence

When the tap changer is in the neutral position and the control calls for a tap change the following events occur:

1. The motor is energized and begins to turn.
2. The motor sprocket drives the main sprocket through the chain drive.
3. The geneva pinion on the main sprocket enters the geneva slot and begins to index the geneva.
4. The holding switch closes to insure the tap change will go to completion. The control opens the initial circuit. The motor is energized only through the holding switch.
5. The reversing switch pin on the geneva begins to drive the reversing switch indexing arm.
6. One of the two main interrupting movable contacts slides out of engagement with the neutral stationary contact and interrupts the circuit through that branch.
7. The reversing switch arm rotates, driving the reversing switch contacts to pivot, and bridge the neutral contact to a stationary contact connected to one end of the series winding is thus established. No arcing occurs across the reversing switch contacts.
8. The main interrupting contacts slides over and onto the number one stationary contact, making a bridging position from contact N to contact 1 through the reactor.
9. The geneva pinion exits the geneva slot. The geneva stops moving and is rotationally locked.
10. The holding switch opens and de-energizes the motor.

11. The brake engages a disk in the main sprocket and brings it to a stop at mid travel.

12. The motor shaft has completed a 360 degree turn. The elapsed time from step 1 to step 13 is 250 milliseconds.

13. If the control issues another signal to index in the same direction, the same sequence is repeated except the reversing switch is not actuated. The reversing switch does not move until the tap changer is reversed and stepped the opposite direction back to neutral.

Troubleshooting Guide

Complete Regulator in Service

WARNING: When troubleshooting energized equipment, protective gear must be worn to avoid personal contact with energized parts. Failure to do so may cause serious injury or death.

External Check

When service personnel arrive at what appears to be a malfunctioning regulator, it is advisable to examine the power connections first. For example, verify that the source lead is connected to the source bushing; that the load lead is connected to the load source bushing; and that the source-load lead is connected to the source-load bushing. Check for other potential problems, such as an open ground connection.

Defining the Problem

Refer to Figure 6-2, page 6-7 while diagnosing the problem.

After the external power connections have been checked, check the voltage-disconnect knife switch (V_1 and V_6 if present) and the current shorting knife switch (C) of the rear panel signal circuit in the control box. Close the voltage disconnects if open. Open the shorting switch, if closed.

Check for loose connections or burnt wiring. Make sure the ratio-correcting transformer RCT_1 is on the correct tap for the regulated voltage shown on the nameplate on the control box door.

Remove the motor and panel fuses from the control and check for continuity across each fuse. Spare fuses are shipped with each control and located in the control box.

NOTE: Use only 350 V ac, slow-blow ceramic fuses of the proper current rating. Failure to do so may cause unnecessary fuse operation or insufficient protection of the regulator and control.

If the above checks do not identify the problem, determine which of the following three categories best describes the malfunction, and follow the corresponding diagnostic steps:

The Regulator Will Not Operate Manually or Automatically

Diagnosing Trouble:

1. Connect a voltmeter between TB_1-R_1 and TB_1-G. Set the control function switch on MANUAL.
2. Toggle the raise switch and measure the voltage between terminals R_1 and G on terminal board TB_1. The voltage reading should be approximately the set voltage setting.
3. Place the voltmeter hot lead on TB_1-L_1 and then toggle the lower switch.
4. Measure the voltage between terminals L_1 and G on terminal board TB_1. The voltage reading should be approximately the set voltage value.
5. If correct voltage readings are obtained in steps 2 and 4, the trouble may be in the position indicator, junction box or control cable. Refer to the junction box troubleshooting section on page 6-3.
6. If there is no voltage measurement in either step 2 or 4, make a corresponding measurement (R_3 to G and L_3 to G) on lower terminal board TB_2.
7. If the voltages measured in Step 6 are approximately the set voltage value, then the fault is likely a loose connection or a faulty terminal between TB_1 and TB_2.
8. If steps 2, 4, and 6 do not provide voltage readings, measure the voltage between V_M and G on terminal board TB_2. The reading should be approximately the set voltage value.
9. If Step 8 measures correctly, the trouble could be an open motor fuse, power switch or control.
10. If Step 8 does not yield a voltage measurement check the voltage between PD_11 (V_1) and ground (G) at the voltage disconnect knife switch.
    a. If the set voltage value is approximately obtained, the V_1 disconnect or the ratio correcting transformer (RCT_1) of the rear panel signal circuit is probably faulty.
    b. If voltage is not obtained, the trouble is in the control cable, junction box, or regulator tank. Refer to the junction box troubleshooting section on page 6-3. If the junction box checks are satisfactory, the trouble is in the regulator tank. See S225-10-2 for the troubleshooting method.

The Regulator Will Operate Manually But Not Automatically

Diagnosing Trouble:

1. If the control will not operate automatically, verify that the band edge indicators are functioning. (These are the HIGH and LOW indicators located on the display.) If they are not functioning, check

Printed in U.S.A.

Function Code 56, Reverse Sensing Mode. Set it to 0, if it is not there already. Retry the automatic mode of operation.

2. Verify that Function Code 69 (Auto Blocking) is set to 0 (Off). Retry the automatic mode of operation.
3. Measure the voltage from V_S to G on lower terminal board TB_2.
   a. A measurement of approximately the set voltage value at V_S to G indicates that the problem is in the control.
   b. If there is no voltage present at V_S to G, the trouble is in the V_1 disconnect or ratio correcting transformer of the rear signal circuit. Replace them.
4. If check "a" indicates that the trouble is in the control, refer to Control Troubleshooting.
5. Check the hold switch circuit.
   a. The tap changer will complete a tap change by placing the control function switch to MANUAL and toggling and holding the raise/lower switch in the desired direction for 2 seconds.
   b. If the raise/lower switch must be held in the RAISE or LOWER position to complete a tap change, the problem is in the "hold switch" circuit.
   c. Check for voltage between TB_2-HS and G, and TB_1-HS and G. If voltage is present at TB_1-HS and not on TB_2-HS, the problem is in the back panel wiring harness. Replace the orange HS lead from TB_1-HS to TB_2-HS. If no voltage is present at TB_1-HS, the problem is in the control cable, junction box cover or the hold switch (located inside the regulator) itself. Check cable continuity up to the junction box. If it appears normal, the problem is the hold switch. Adjust or replace it (See S225-10-2). If all appears to be in order, the problem is not in the hold switch, but most likely in the control.

The Regulator Operates Manually but Operates Incorrectly When Set On Automatic

Diagnosing Trouble:

Run the regulator to the neutral position with the control switch. Check for voltage between V_4 and G on TB_1. This is the sensing circuit supplying voltage from the output of RCT_1 on the rear panel. If this voltage is more than 10% above or below the programmed voltage level setting of the control, then the source is beyond the range of the regulator. An absence of voltage would indicate a wiring problem such as an open somewhere in the control power supply. If these checks are correct, then the malfunction is probably in the control. Refer to Control Troubleshooting, following.

Control Troubleshooting

At this point, the problem has been determined to be in the control, so the front panel should be taken out of the control cabinet to a service bench for troubleshooting. Figure 6-2, page 6-7 can be used to aid the troubleshooting process. The panel components are checked by using an external voltage of approximately 120 V ac, 60/50 Hz, applied to the external source terminals of the control.

To gain access to the front panel components, first remove the back shield. This is accomplished by removing the cable clamp attached to the shield side, and then removing the four nuts which secure the shield to the front panel.

1. Check the motor and panel fuses to ensure they have not blown.
2. Connect the power source to the external source terminals, **observing the proper polarity**.

> **WARNING:** Correct polarity must be administered to the control. Failure to do so will cause a short circuit of the users' voltage supply and possible damage to the control.

   Place the power switch on the EXTERNAL position.

3. The control display should light. If the display does not light, measure the voltage on the printed circuit board from terminals P_5-4 to P_5-3, expecting to measure approximately 120 V ac.
4. If the display does not light and no voltage is measured from terminals P_5-4 to P_5-3, then the problem is in the power switch. The power (Internal-Off-External) switch can be checked by measuring the voltage from switch terminal PS_2 to ground, switch terminal PS_5 to ground, and switch terminal PS_8 to ground. These measurements should equal the external voltage applied. If not, the power switch is defective.
5. If the display does not light and voltage is measured from terminals P_5-4 to P_5-3, then the circuit board is defective and must be returned to the factory for repair.
6. If the display does light, but reports the FAIL message, then the internal diagnostics have detected a problem. When the word FAIL appears, it does not necessarily indicate the control is malfunctioning.

   Display Function Code 95.

Compare the display number with the System Status Code, page 3-16. If any number other than 0, 6, 7 or 10 is displayed, the control has failed, and in need of repair. Contact Cooper Power Systems for return authorization information. If 10 is displayed, it means there is no neutral light signal and the control has Function Code 12P set to 0 (neutral). Change FC 12P from 0 to 1, then reboot the control. It will now PASS.

The front panel circuits for the drag-hand reset solenoid (DHR) and neutral light (NL) can be checked as follows:

1. Connect the ac voltmeter from G to DHR on fanning strip TB_2 (identified as white wire [G] and white/orange tracer [DHR]).
2. Depress the drag-hand reset toggle switch and observe approximately 120 V on the voltmeter. If no voltage is measured, the switch is probably defective.
3. Connect a 120 V ac source to the fanning strip TB_2-NL (identified as white/red) and fanning strip TB_2-G and TB_2-NL ground (identified as white). The neutral light on the control panel should light. If not, the bulb may be bad.

Junction Box Troubleshooting

This section is used if the regulator will not operate manually. (Problem was isolated to junction box or regulator tank after checking out control, on page 6-1).

The junction box is composed of a terminal board, the position indicator, and the control box interconnections. Refer to Figure 6-1, page 6-5, when the following steps are made:

1. Remove the regulator from service, as stated on page 1-10.
2. Ground the three high-voltage bushings.
3. Open V_1, disconnect switch on rear panel of control cabinet.
4. Remove junction box lid.
5. Check the wiring on the junction box terminal board for loose connections, burnt wiring or bad swage joints.
6. Set the power switch to EXTERNAL.
7. Apply a 60/50 Hz, 120 V ac nominal variable source to the external source terminals. Make certain to maintain correct polarity.
8. Set the control function switch on MANUAL.
9. Toggle the raise switch. Measure the voltage between terminals R and G on terminal board. The voltage reading should be approximately 120 V ac.
10. Move the voltmeter leads to L and G. Toggle the lower switch.
11. Measure the voltage between terminals L and G on terminal board. The voltage reading should be approximately 120 V ac.
12. If correct voltage readings are obtained in steps 9 and 11 above, the trouble is in the regulator tank. Refer to troubleshooting section of S225-10-2.
13. If there is no voltage measurement in either step 9 or 11, the problem is in the limit switches inside the position indicator or in the control cable.
14. Check the continuity of the raise and lower limit switches. The switches should be closed on all tap changer positions except for the set limit switch positions of the indicator dial. To check the continuity:
    a. Remove position indicator green-black lead from splice terminals.
    b. Place the meter lead on the disconnected lead and the other lead on terminal L of the junction box terminal board. Then check continuity.
    c. If a continuity problem occurs, refer to Position Indicator Replacement below.
    d. Remove the position indicator blue lead from the splice terminal.
    e. Place the meter lead on the disconnected lead and the other lead on terminal R of the junction box terminal board. Check continuity.
    f. If a continuity problem occurs, refer to Position Indicator Replacement below.
15. Check the reset solenoid of position indicator. Depress the drag-hand reset switch while measuring the voltage between DHR and G on the terminal board. The voltage reading should be approximately 120 V ac and drag hands will reset.
16. If 120 V is read and drag hand will not reset, refer to Position Indicator Replacement, below.
17. If 120 V is not read, refer to Control Troubleshooting, page 6-2.

Position Indicator Replacement

The following instructions apply only to the junction box mounted position indicator construction that was initiated in April, 1980.

To replace a defective position indicator, the unit must be removed from service as outlined in Removal from Service, page 1-11.

WARNING: This procedure must only be performed on a regulator that is out of service.

1. A defect in the position indicator may have caused loss of synchronization between the tap changer and the indicator hand. Verify that the tap changer is in neutral via the neutral light of the control and visual inspection of the tap changer. If the position indicator does not also show neutral, refer to instructions in S225-10-2, Regulator Tap Changer Operation and Maintenance.
2. Remove the junction box cover.
3. Note the location of the indicating hand for future alignment and disengage the flexible shaft from the position indicator shaft. In early 1989 this joint was changed to a setscrew type coupling. Older equipment employed a cotter pin coupling.
4. Disconnect the four leads from the junction box terminal board and open the two splice terminals to the control cable. Refer to Figure 6-1.
5. Remove the three bolts holding the indicator to the junction box and slide the indicator free.
6. Remove the gasket from the groove on the back of the indicator body.
7. Clean the gasket surface of the junction box and the gasket and groove on the new indicator.
8. Place the gasket in the groove and insert the leads through the junction box wall, align the holes and install the three bolts finger tight.
9. Wrench-tighten the bolts to evenly compress the gasket and bring the indicator body tight against the junction box.
10. Connect the six leads to the terminal board and control cables leads per Figure 6-1 and secure all connections.
11. Turn the indicator drive shaft to place the hands at the previously noted position.
12. Slide the flexible shaft coupling into the indicator coupling and secure the allen screws.
13. Position the wires to prevent snagging on the couplings and secure the wires with tie wraps.
14. Connect a 120 V ac external power supply to the external banana jack on the front of the control panel.
15. Run the tap changer manually to verify the alignment of the position indicator hand and the neutral light. The neutral light should be **ON** with the yellow pointer hand on zero.
16. The following steps are instructions for setting the proper alignment to ensure **rotational calibration on** a new "Cooper " position indicator.
    a. Align the black scribe line on the position indicator (PI) coupling to the center of the operating band notches on the PI housing **(The notches are located on the back hub of the PI housing).** Note that the new Cooper PI has a one-piece input shaft/coupling and a raised mark at the 12 o'clock position on the PI housing hub. Also, note the counterclockwise (ccw) and clockwise (cw) band indicator notches **located on the sides of the 12 o'clock mark. Each band indicator notch is 15 degrees in bandwidth.**
    b. Directly align the scribe line on the coupling and the 12 o'clock housing marks and insert the external flex end into the receiver hole of the coupling and tighten the 2 set screws to 16 in-lbs.
    c. Apply power to the control, set the control to manual mode, and proceed to check the proper movement and alignment of the PI as follows:
    d. Index the PI to the 2-R position, the scribe line on the coupling should be located ccw of the 12 o'clock mark. If the scribe line is outside of the ccw band notch **of the PI back hub,** loosen the brass coupling set screws and rotate the coupling (while holding the flex shaft) until the scribe line is one line-width inside the band notch. Retighten the setscrews and proceed to step e. If the scribe line is inside the notch, proceed to e.
    e. Index the PI to neutral (0) position. The scribe line should be located cw of the 12 o'clock mark. If the scribe line is outside the cw band notch, loosen the screws and rotate the coupling until the scribe line is one line-width inside the band notch and retighten the setscrews to 16 in-lbs.
    f. Index the PI to 2-R and 2-L position several times and each time, the scribe line should stop inside the notched area of the PI housing then proceed to steps 17. If at any time that the scribe line falls outside of the notch area after each indexing, try to recalibrate per this procedure one more time or contact the Cooper Service Department for assistance.
17. Replace the junction box cover.

Control Calibration

All controls are factory calibrated and should not need to be recalibrated by the user. However, calibration can be

performed for both the voltage and current circuits with the following steps:

> **WARNING:** It must be verified that both the neutral light and the position indicator hand indicate neutral when the tap changer is physically in the neutral position. Lack of synchronization will cause an indefinite indication of NEUTRAL. Without both indications of neutral, bypassing of the regulator at a later time will not be possible, and the line must be de-energized to avoid shorting part of the series winding.

Voltage Calibration

1. Connect an accurate true-RMS-responding voltmeter to the voltmeter terminals. This voltmeter should have a base accuracy of at least 0.1% with calibration traceable to the National Bureau of Standards.
2. Connect a stable 50/60 Hz voltage source (with less than 5% harmonic content) to the external source terminals.
3. Place the power switch on EXTERNAL.
4. Adjust the voltage source to provide 120.0 V to the control, as read on the reference voltmeter.
5. Before calibration can be performed, security level 3 must be activated. This is accomplished by entering the proper security code at Function Code 99. Depress the following keys on the keypad:

   FUNCTION, 99, ENTER; 32123, ENTER

   The proper level of security is now activated.
6. Access Function Code 47 by keying FUNCTION, 47, ENTER.
7. The display will show the voltage applied to the control. This should correspond to the reading on the reference voltmeter. If the control reading is significantly different (see Table 2-1 for allowable tolerances), the calibration can be altered by keying CHANGE, and then entering the correct voltage as displayed on the reference meter, followed by ENTER. The voltage circuit is now calibrated.

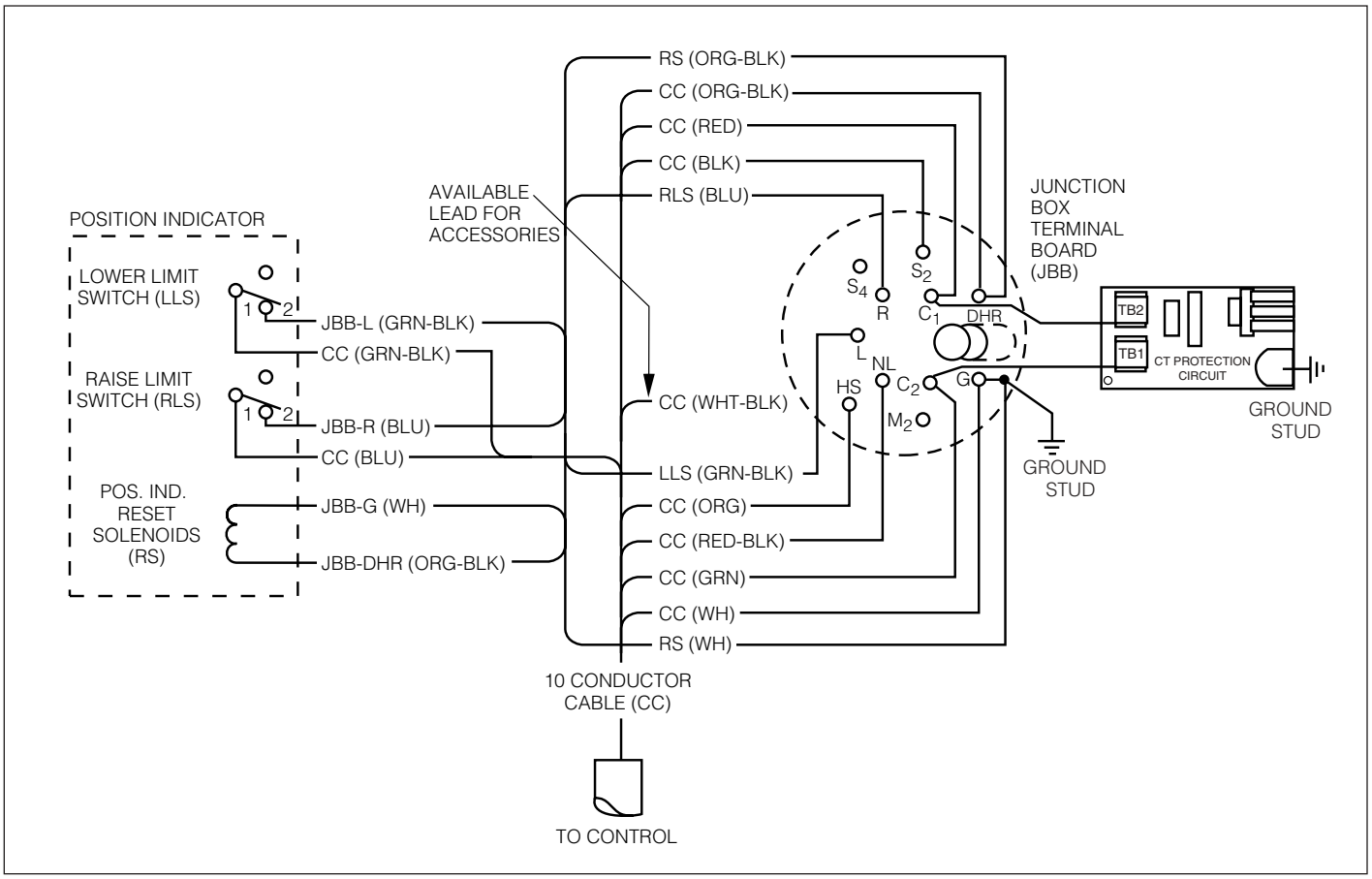

Figure 6-1.
Junction Box Wiring Diagram

Current Calibration

1. Connect an accurate true-RMS-responding ammeter in series with the current source.
2. Connect a stable 60/50 Hz current source (with less than 5% harmonic content) to the reference ammeter and to the current input terminals C_1 and C_3 on fanning strip TB_2 (C_1 is identified by a red wire, and C_3 is identified as the green wire).
3. To power the control, connect a 120 V ac voltage source to the external source terminals.
4. Place the power switch on EXTERNAL.
5. Adjust the current source to provide 0.200 A to the control, as read on the reference ammeter.
6. Before calibration can be performed, security level 3 must be activated. This is accomplished by entering the proper security code at Function Code 99. Depress the following keys on the keypad:

   FUNCTION, 99, ENTER; 32123, ENTER

   The proper level is now activated.
7. Access Function Code 48 by keying FUNCTION, 48, ENTER.
8. The display will show the current applied to the control. This should correspond to the reading on the reference ammeter. If the control reading is significantly different (greater than 0.6 milliamperes error), the calibration can be altered by keying CHANGE, and then entering the correct current as displayed on the reference meter, followed by ENTER. The current circuit is now calibrated.

CIRCUIT BOARD CONNECTORS

CONNECTOR P4
- 11 ORANGE
- 10 VIOLET
- 9 WHITE
- 8 BROWN
- 7 YELLOW
- 6 WHITE/PURPLE
- 5 (BLANK)
- 4 WHITE/RED
- 3 RED/WHITE
- 2 WHITE/ORANGE
- 1 WHITE/BLUE

CONNECTOR P5
- 9 WHITE/GREEN
- 8 RED/BLACK
- 7 BLUE
- 6 (BLANK)
- 5 WHITE/BROWN
- 4 BLACK
- 3 WHITE
- 2 GREEN
- 1 RED

CTP - CURRENT TRANSFORMER PROTECTOR CIRCUIT
DF - DIFFERENTIAL VOLTAGE FUSE
DHR - DRAG HAND RESET
EST - EXTERNAL SOURCE TERMINALS
HSL - HOLDING SWITCH LOWER
HSR - HOLDING SWITCH RAISE
IRS - INDICATOR RESET SOLENOID (POSITION INDICATOR)
JB - JUNCTION BOX ON REGULATOR COVER
JBB - JUNCTION BOX TERMINAL BOARD ON THE COVER
LLS - LOWER LIMIT SWITCH (POSITION INDICATOR)
MC - MOTOR CAPACITOR
MF - MOTOR FUSE
MOV - METAL OXIDE VARISTOR
NL - NEUTRAL LIGHT
NLC - NEUTRAL LIGHT CAPACITOR
NLS - NEUTRAL LIGHT SWITCH
PD - POTENTIAL DISCONNECT DEVICE
PF - PANEL FUSE
PS - POWER SWITCH
RCT - RATIO CORRECTION TRANSFORMER
RLS - RAISE LIMIT SWITCH (POSITION INDICATOR)
SD - CURRENT SHORTING DEVICE
TB - CONTROL TERMINAL BOARD
TCB - TAP CHANGER TERMINAL BOARD
VDIFF - DIFFERENTIAL VOLTAGE
VM - MOTOR VOLTAGE
VS - SENSING VOLTAGE
VTT - VOLTAGE TEST TERMINALS

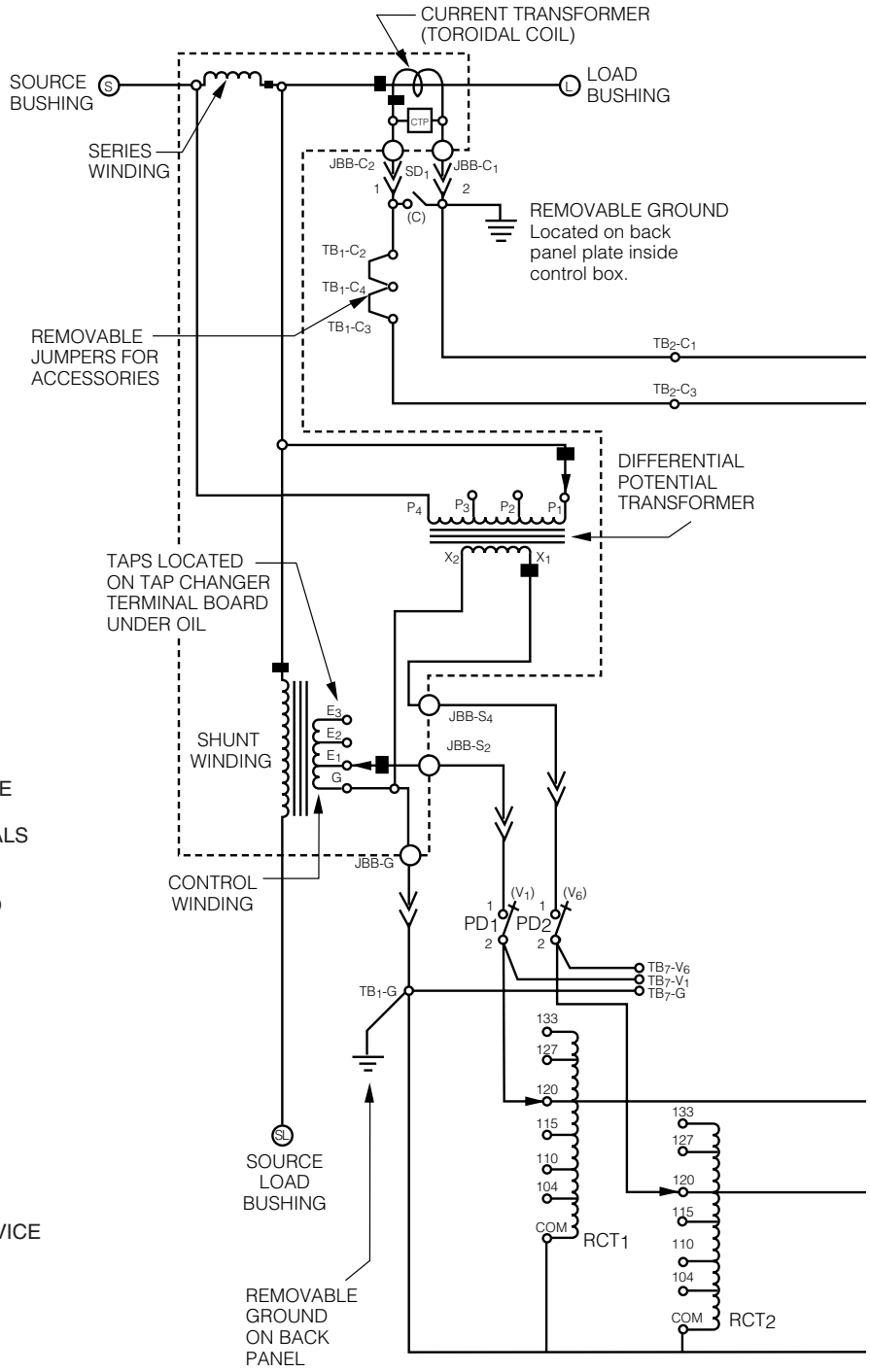

Figure 6-2.
Wiring diagram for Type B VR-32 Regulator and control with differential potential transformer

S225-10-10

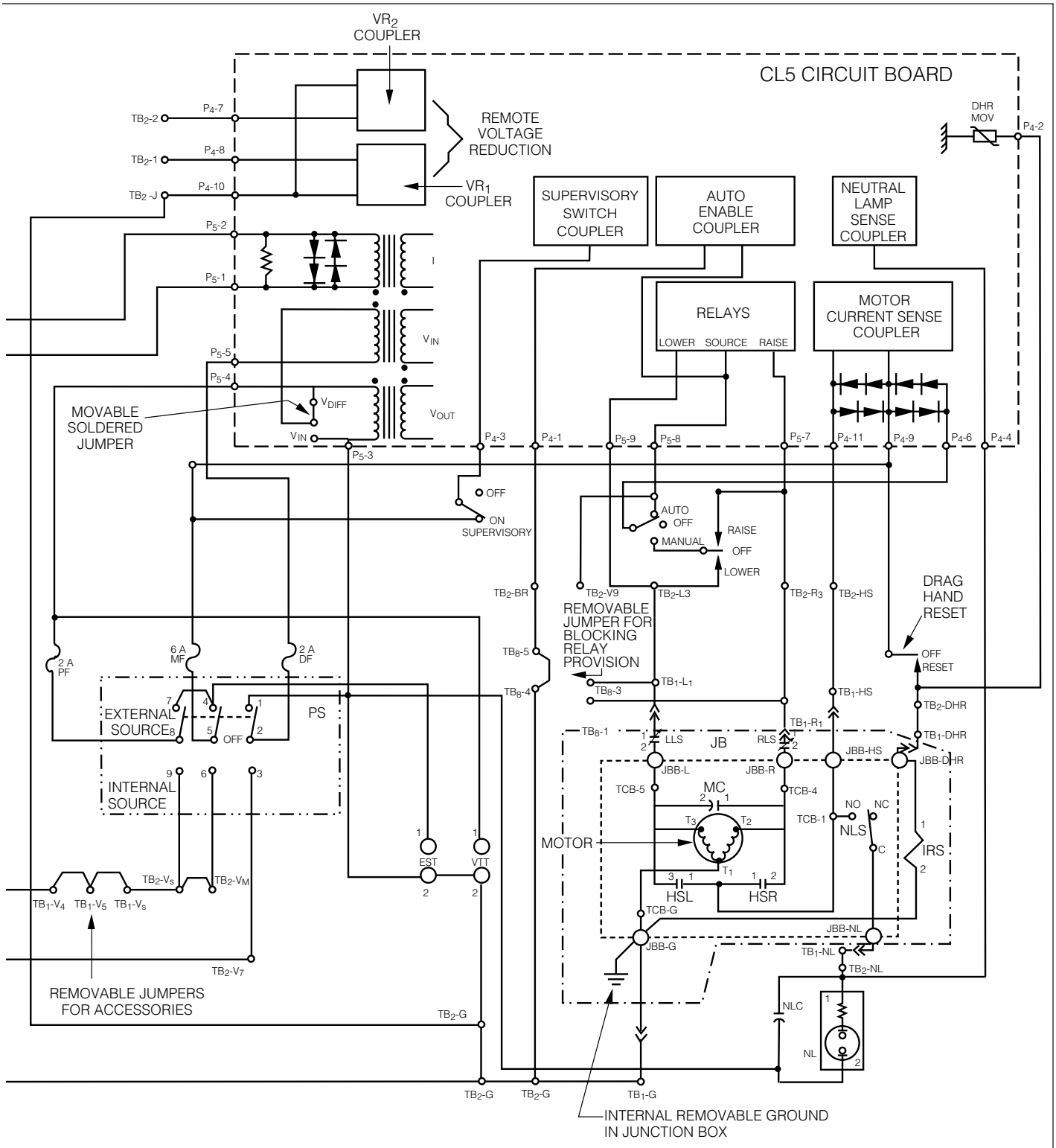

Note: Portions of schematic shown in dotted enclosure (----) are located in regulator tank.
Portions of schematic shown in dashed enclosure (– – –) are located on the circuit board.
Portions of schematic shown in short-long dashed enclosure (— - —) are located in the junction box near the tank cover.
Portion of schematic shown in short-short-long dashed enclosure (— - - —) is the power switch on the front panel.

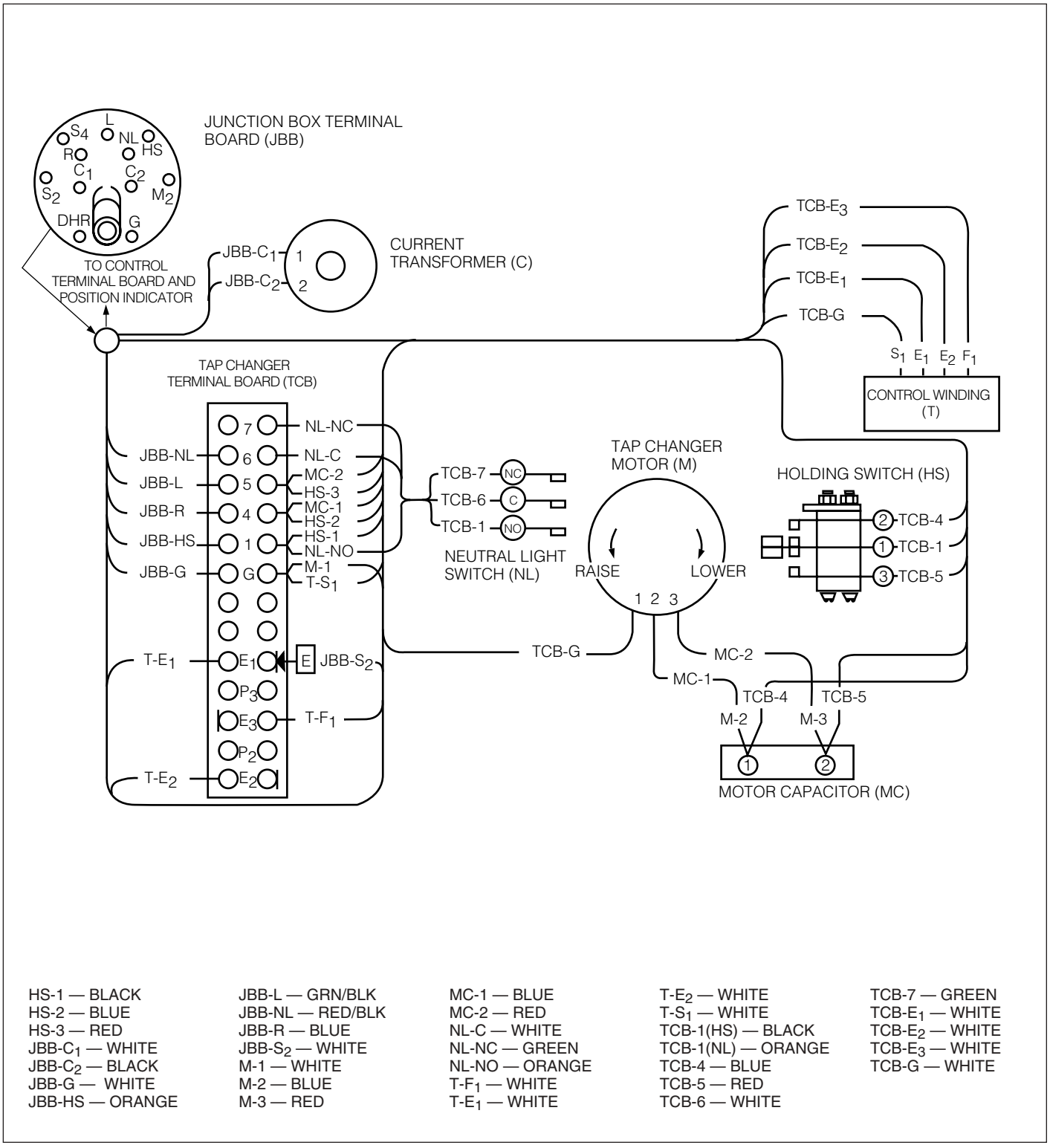

HS-1 — BLACK
HS-2 — BLUE
HS-3 — RED
JBB-C_1 — WHITE
JBB-C_2 — BLACK
JBB-G — WHITE
JBB-HS — ORANGE

JBB-L — GRN/BLK
JBB-NL — RED/BLK
JBB-R — BLUE
JBB-S_2 — WHITE
M-1 — WHITE
M-2 — BLUE
M-3 — RED

MC-1 — BLUE
MC-2 — RED
NL-C — WHITE
NL-NC — GREEN
NL-NO — ORANGE
T-F_1 — WHITE
T-E_1 — WHITE

T-E_2 — WHITE
T-S_1 — WHITE
TCB-1(HS) — BLACK
TCB-1(NL) — ORANGE
TCB-4 — BLUE
TCB-5 — RED
TCB-6 — WHITE

TCB-7 — GREEN
TCB-E_1 — WHITE
TCB-E_2 — WHITE
TCB-E_3 — WHITE
TCB-G — WHITE

Figure 6-3.
Typical internal wiring of regulator with spring and direct drive tap changer

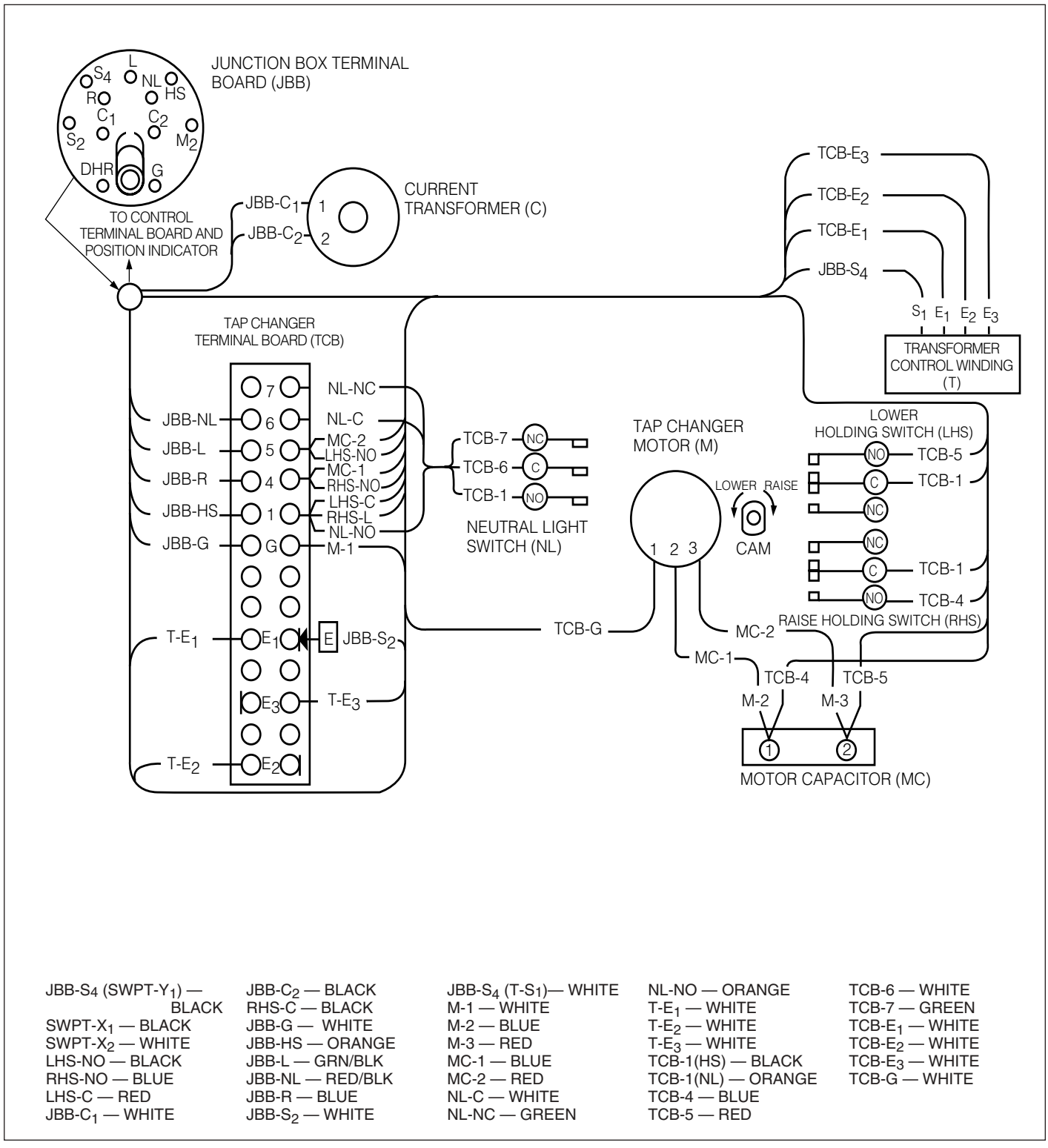

JBB-S_4 ($SWPT\text{-}Y_1$) — BLACK
$SWPT\text{-}X_1$ — BLACK
$SWPT\text{-}X_2$ — WHITE
LHS-NO — BLACK
RHS-NO — BLUE
LHS-C — RED
$JBB\text{-}C_1$ — WHITE
$JBB\text{-}C_2$ — BLACK
RHS-C — BLACK
JBB-G — WHITE
JBB-HS — ORANGE
JBB-L — GRN/BLK
JBB-NL — RED/BLK
JBB-R — BLUE
$JBB\text{-}S_2$ — WHITE
$JBB\text{-}S_4$ ($T\text{-}S_1$)— WHITE
M-1 — WHITE
M-2 — BLUE
M-3 — RED
MC-1 — BLUE
MC-2 — RED
NL-C — WHITE
NL-NC — GREEN
NL-NO — ORANGE
$T\text{-}E_1$ — WHITE
$T\text{-}E_2$ — WHITE
$T\text{-}E_3$ — WHITE
TCB-1(HS) — BLACK
TCB-1(NL) — ORANGE
TCB-4 — BLUE
TCB-5 — RED
TCB-6 — WHITE
TCB-7 — GREEN
$TCB\text{-}E_1$ — WHITE
$TCB\text{-}E_2$ — WHITE
$TCB\text{-}E_3$ — WHITE
TCB-G — WHITE

Figure 6-4.
Typical internal wiring of regulator with Quik-drive tap changer

JBB-G — WHITE
JBB-HS — ORANGE
RLS-1 — BLUE
LLS-1 — GRN/BLK
JBB-NL — RED/BLK
JBB-DHR — ORG/BLK
JBB-S_2 — BLACK
JBB-C_2 — GREEN
JBB-C_1 — RED
TB_2-HS — ORANGE
TB_8-1 — BLUE
TB_2-R_3 — BLUE
TB_2-L_3 — WHT/GRN
TB_8-3 — WHT/GRN
TB_2-NL — WHT/RED
TB_2-DHR — WHT/ORG
TB_2-V_S — BLACK
RCT_1-120 — BLACK
SD_1-1 — VIOLET
TB_2-C_3 — GREEN
RCT_2 — WHT/BRN
RCT_1 — BLACK
TB_7-V_6 — WHT/BRN
TB_7-V_1 — BLACK
PD_2-2 (V_6) — WHT/BRN
PD_1-2 (V_1) — BLACK
RCT_2-COM — WHITE
TB_1-C_2 — VIOLET
TB_2-C_1 — RED
RCT_1-COM — WHITE
TB_7-G — WHITE
TB_1-V_4 — BLACK
TB_8-4 — WHITE
TB_1-R_1 — BLUE
TB_1-L_1 — WHT/GRN
TB_2-G — WHITE
TB_2-BR — WHT/BLUE
TB_8-5 — WHT/BLUE
TB_1-V_S — BLACK
SD_1-2 — RED
TB_1-C_3 — GREEN
TB_1-HS — ORANGE
TB_1-NL — WHT/RED
TB_1-DHR — WHT/ORG
TB_7-G — WHITE
RCT_2-120 — WHT/BRN
JBB-S_4— WHT/BLK
TB_2-V_7 — WHT/BRN

NOTES:
TB_2-V_7 to TB_2-V_S jumper only applies to non-reverse power flow back panel assemblies supplied without RCT_2.

TB_2-V_7 is connected to RCT_2-120 on back panel assemblies set up for reverse power flow supplied with RCT_2.

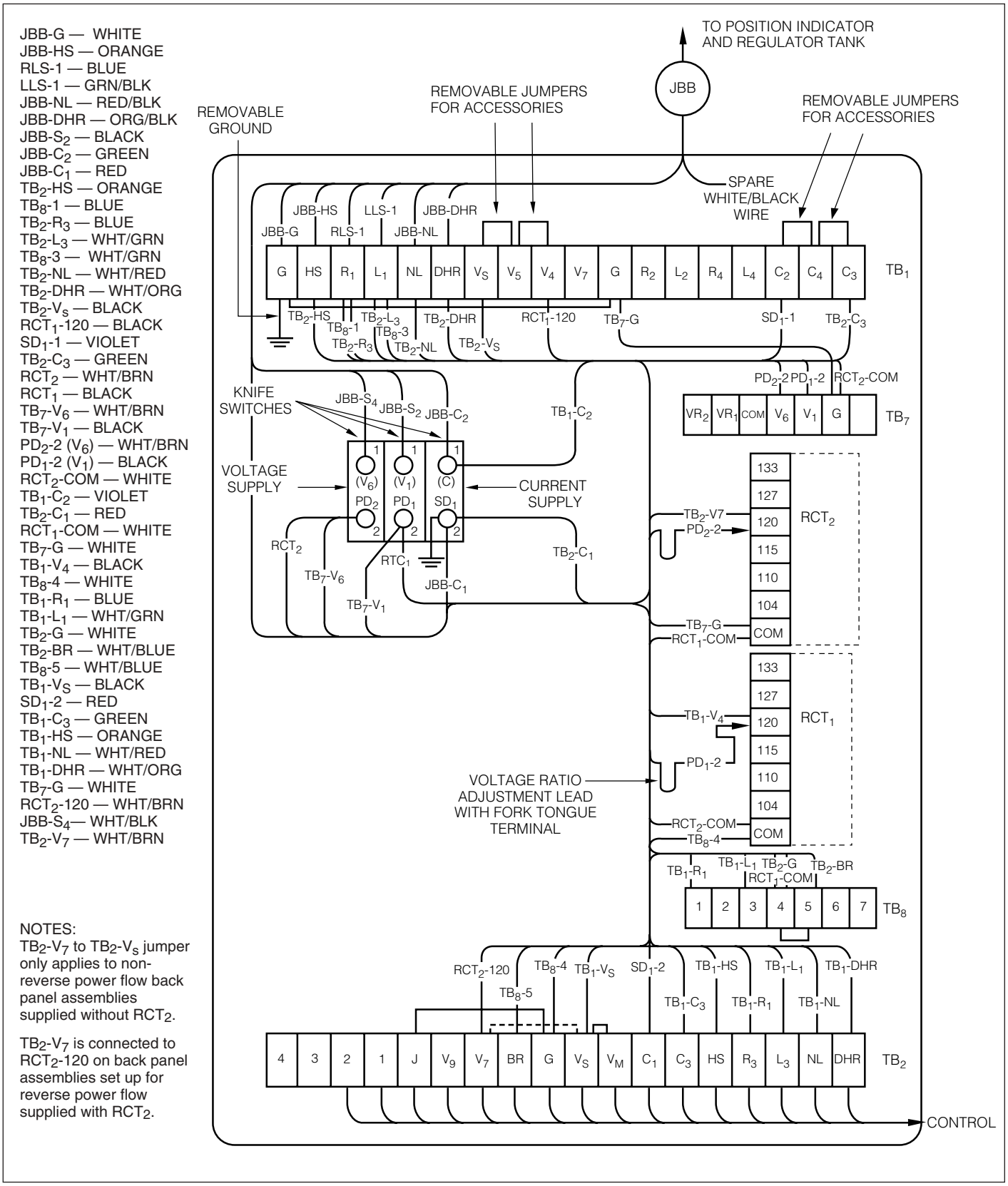

Figure 6-5.
Back panel signal circuit

Accessories

Heater Assembly

The thermostatically-controlled heater assembly is best used in high-humidity areas.

The thermostat in the heater assembly will turn the heater on when the temperature falls below 85°F (29°C) and off when the temperature exceeds 100°F (38°C). For full details refer to S225-10-1 Supplement 2.

Data Reader

The optional hand-held Data Reader allows the operator to copy all of the function code parameters from the control for transfer to a personal computer. Operation of the control is not affected by the Data Reader.

The Data Reader can store 100 Meter Pac readings, 100 CL-4B/C control readings, 25 CL-5 Series control readings and 20 F4C control readings before the memory must be purged.

Data Reader and Software Kit

The Data Reader and Software Kit includes the Data Reader, the Data Reader-to-control cable, the Data Reader-to-PC cable, the Data Reader windows software and documentation. The non-copy protected software operates on an IBM-compatible personal computer with Windows 3.1 or higher. The software allows the operator to perform the following functions:

1. Upload the data from the Data Reader to the soft - ware database.
2. Erase the Data Reader memory.
3. Scan the data on the monitor.
4. Print reports.
5. Transfer data to another database.

Data Reader Assembly

The Data Reader Assembly consists of the Data Reader and the Data Reader-to-control cable.

Cooper Control Interface Software

The Cooper Control Interface (CCI) is a Windows-based configuration software package for use with the regulator CL-4C and CL-5 Series controls. The CCI allows the users to:

- Create Control Settings
- Upload Settings to the Control
- Download Readings from the Control

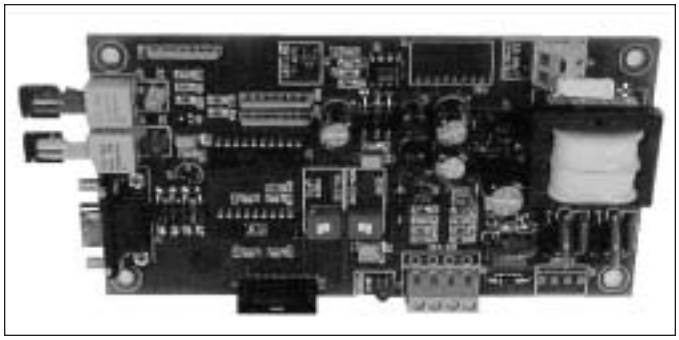

Figure 7-1.
Fiber/RS-232 Board

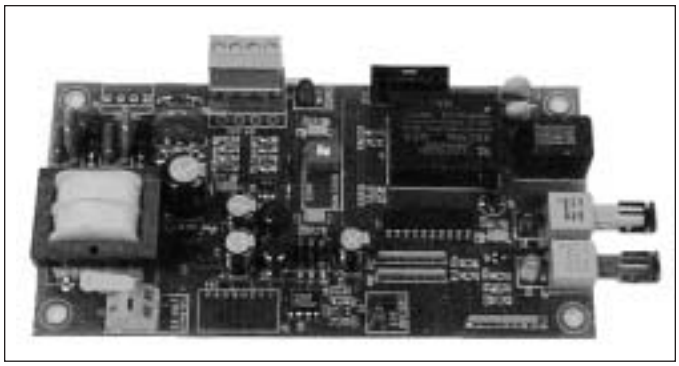

Figure 7-2.
Fiber/Modem Board

- Provide Output of Settings and Readings
- Manage Settings and Readings Effective

This program is fully compatible with Windows 95, Windows 98, Windows 2000, and Windows NT4.0 operating systems. The CCI applications use Dynamic Data Exchange (DDE) technology to connect from hardware to software easily and trouble free.

Both readings and settings are stored as non-proprietary data base formats (.xls) to allow use of the data by other applications without awkward conversions.

Its Graphic User Interface is easy to use and understand. Online help and a complete User Manual make the program easy to learn and generous toolbars make working within the program efficient.

The CCI is designed for front panel configuration with the regulator or recloser control. It also has 2179 protocol for verification with the communication port.

The program includes a file conversion routine to update all of your old files, both settings and readings, to the

new file format. This conversion facilitates the transition from the old DOS-based applications to the new applications.

PC to Data Port Cable

For direct connection of a PC to the Data Port of the CL-4 or CL-5 (and also the Form 4C recloser control) a special cable is required. This special cable connects from the computer's RS-232 port to the TTL Data Port. The cable provides the proper voltage and pin configuration.

The Data Port is intended for connection with either the Data Reader black coil cord or the above PC to Data Port cable. A standard RS-232 cable will not work for interfacing from a PC to the Data Port on the CL-4 or CL-5 series controls. Use of a RS-232 may cause damage to the Data Port on the control and future connections to the Data Port may not work properly.

Digital Communications

This feature includes full remote metering and realtime operation capability. Using this feature, all metering and changing of parameters, including all of the options, can be controlled remotely. Additional remote capabilities include the ability to tap up or down a specified number of taps and the ability to determine the status of local activity. Digital communications requires the addition of one interface board to the back panel.

Digital Communication Interface Board

For connection of the CL-5 Series controls to a digital communication system, several interface boards are available.

One option is a board that provides either fiber optic or RS-232 interface with DATA 2179 communication output. A pair of standard ST type fiber optic connectors and an RS-232 port are mounted on the interface board to provide the customer connection to digital SCADA via multi-mode fiber optic cables or a standard 9-pin DB-9 RS-232 cable. Communication settings are easily changed with the use of dip switches. (See Figure 7-1.)

A second option is a board that provides modem/fiber optic interface with DATA 2179 communication output. The modem connection is just like a computer modem at 2400 baud, and is addressed simply by dialing into it via telephone. The modem connection on the board is a standard RJ-11 phone line connection. All communications to and from the digital SCADA system to the regulators utilize the modem connection. A pair of standard ST type fiber optic connectors is mounted on the interface board to provide the customer connection from regulator to regulator in a loop. Therefore, in this application, only one modem interface board is required for the loop of regulators. The standard fiber optic/RS232 boards would be supplied for additional regulators in the loop. (See Figure 7-2.)

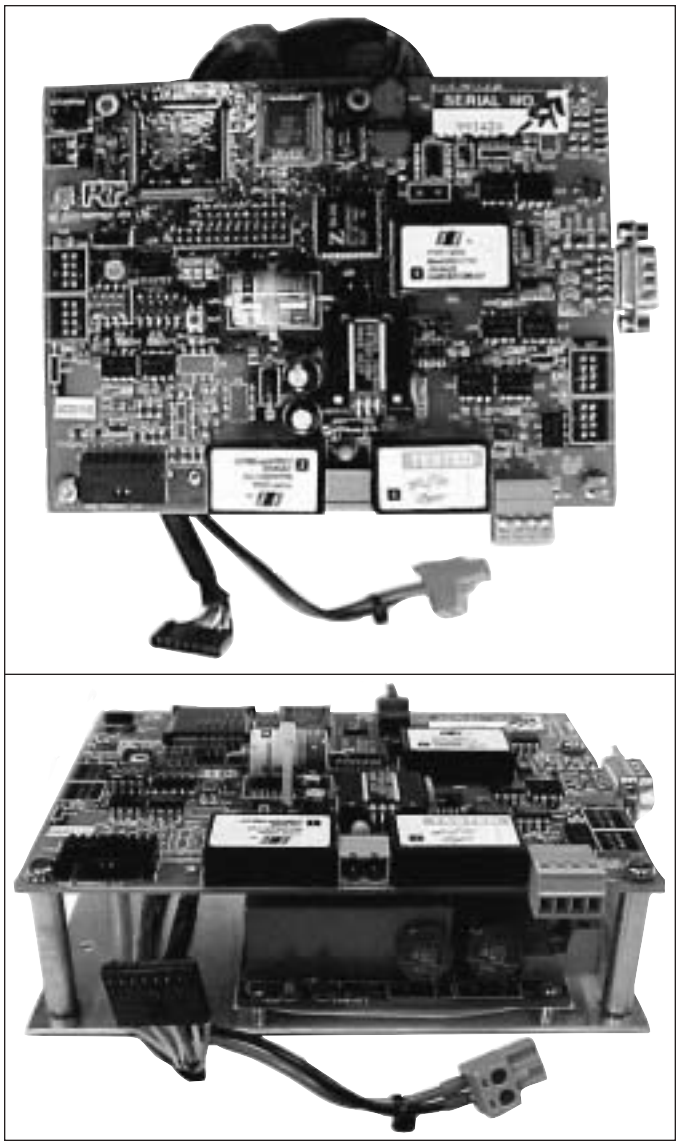

Figure 7-3.
DNP 3.0 Board

Another option is a board that provides either fiber optic or RS-232 interface with DNP 3.0 communication output. This two-layer board consists of a protocol converter interface board (from DATA 2179 to DNP 3.0) and a power supply board. A pair of standard ST type fiber optic connectors and an RS-232 port are mounted on the interface board to provide the customer connection to digital SCADA via fiber optic cables or a standard 9-pin DB-9 RS-232 cable. Communication settings are easily changed with the use of dip switches and rotary switches on the board. (See Figure 7-3.)

The boards are self-powered from the internal regulator potential transformer. A connection from the interface board is made to a port located on the inside of the CL-5 swing panel. The boards can be factory installed or easily installed at the customer's site.

SCADA Relay and Terminal Block

For analog SCADA operation (remote tap changer control), as shown in Figure 4-16, page 4-10, an optional SCADA relay and terminal block assembly is available. (See Figure 7-4.)

Remote Mounting Control Cable

For remote mounting of the control cabinet, extended cable lengths are available in 5 foot (1.5 m) increments from 15 feet (4.6 m) to 45 feet (13.8m).

Fan Cooling Accessory

Voltage regulators 250 kVA and larger can be equipped with fan cooling. Fan cooling increases the load capacity of the regulator by 33%. Special requirements are necessary on regulators using fan cooling. Therefore, the regulator must be ordered with fan cooling or with provisions for adding fan cooling. Mounting cooling fans flush to the plate-type radiator is accomplished by using T-bolts that secure the cooling fan to the bank of radiators.

The automatic operation of the fan is controlled by a thermometer having a thermal switch that will cycle the fan on or off when the top-oil temperature reaches predetermined temperature limits. The thermal switch has an upper limit adjustable from 80°C to 110°C. The differential from make to break is 6°C to 10°C. The thermal switch, when temperature-activated or deactivated, signals a relay which turns the fan on or off.

Figure 7-4.
SCADA relay and terminal block

Spare Parts

Ordering Information

When ordering replacement parts or field-installation accessories for your McGraw Edison VR-32 step-voltage regulator, provide the following information:

1. Regulator serial number (found on nameplate).
2. Regulator catalog number (found on nameplate).
3. Part number (from Parts Manual*).
4. Description of each part.
5. Quantity of each part required.

*A complete list of replacement parts is available. The parts replacement list is most conveniently accessed through the EPIC CD-ROM that requires only a catalog or serial number. This CD-ROM covers parts for VR-32 and Auto-booster regulators built since 1981. Consult your Cooper Power Systems sales representative for information on receiving a CD.

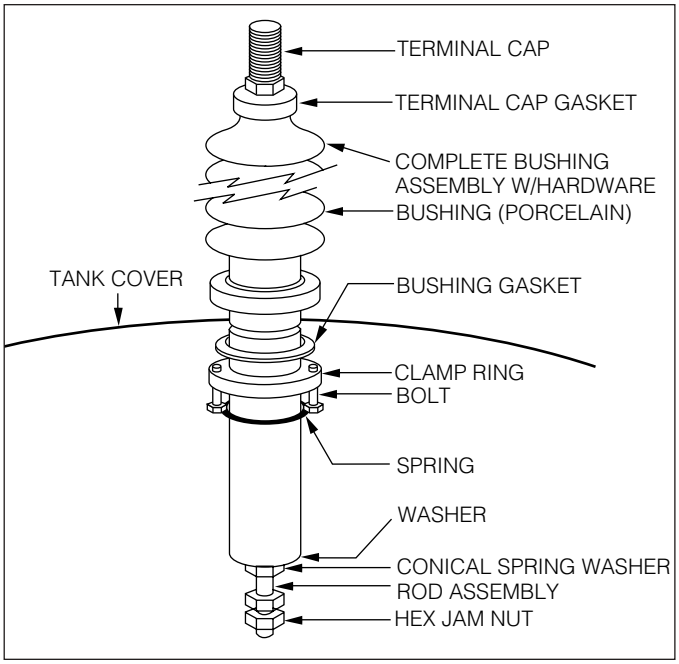

Figure 8-1.
High-voltage bushing

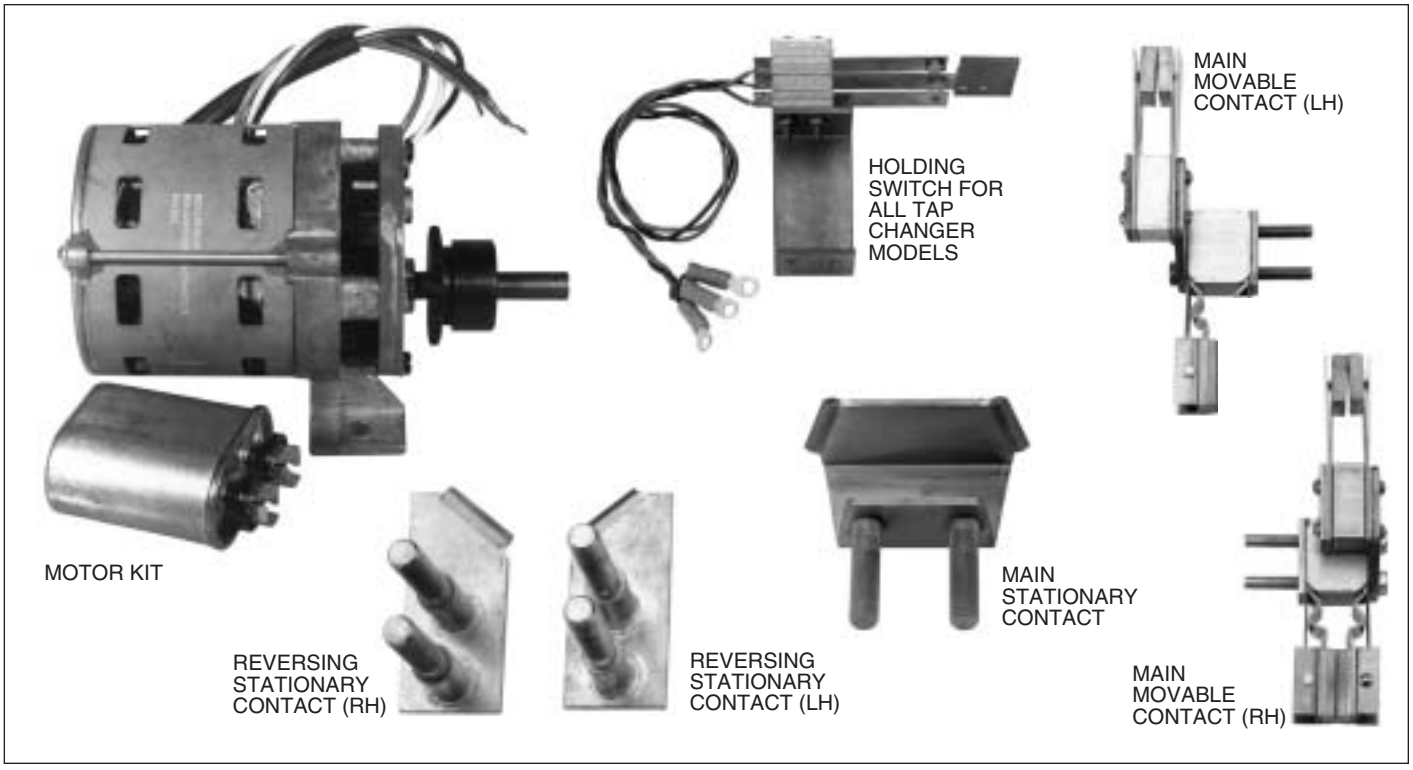

Figure 8-2.
Replacement parts for spring-drive tap changers 928D and 170C

Printed in U.S.A.

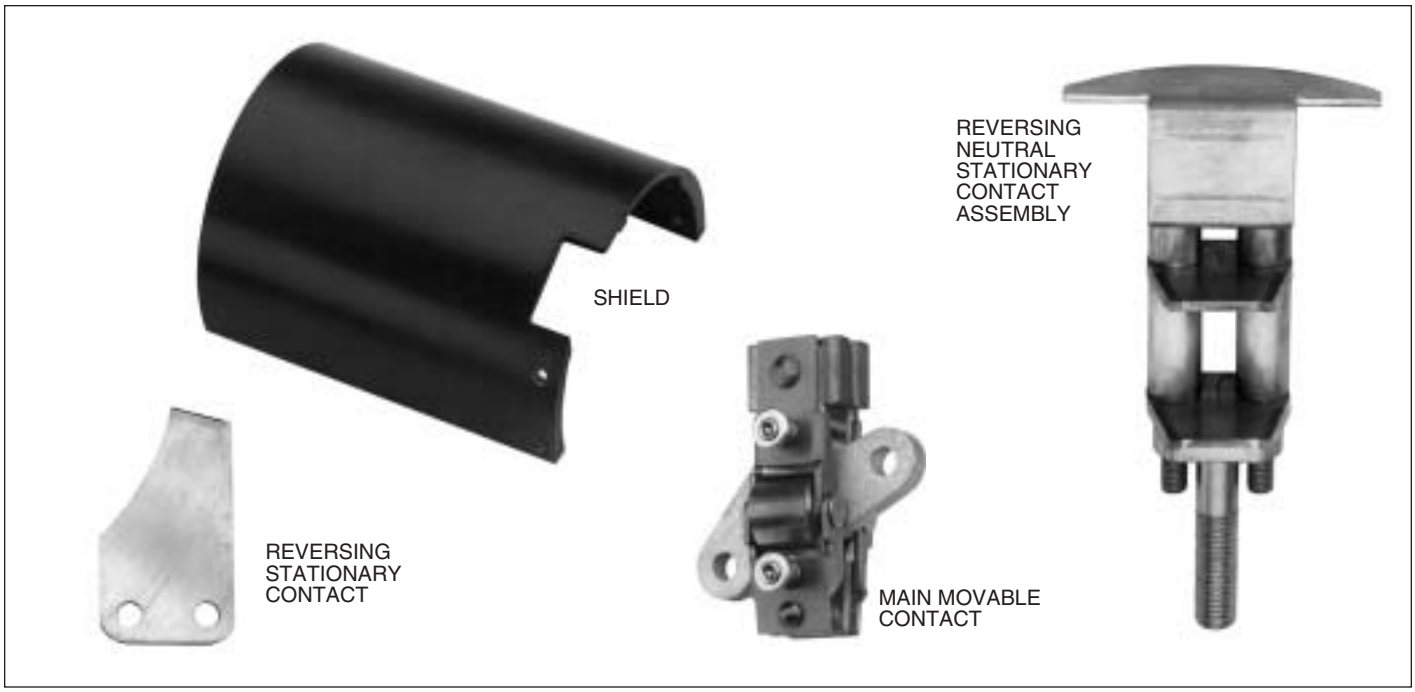

Figure 8-3.
Replacement parts for direct drive tap changer 770B

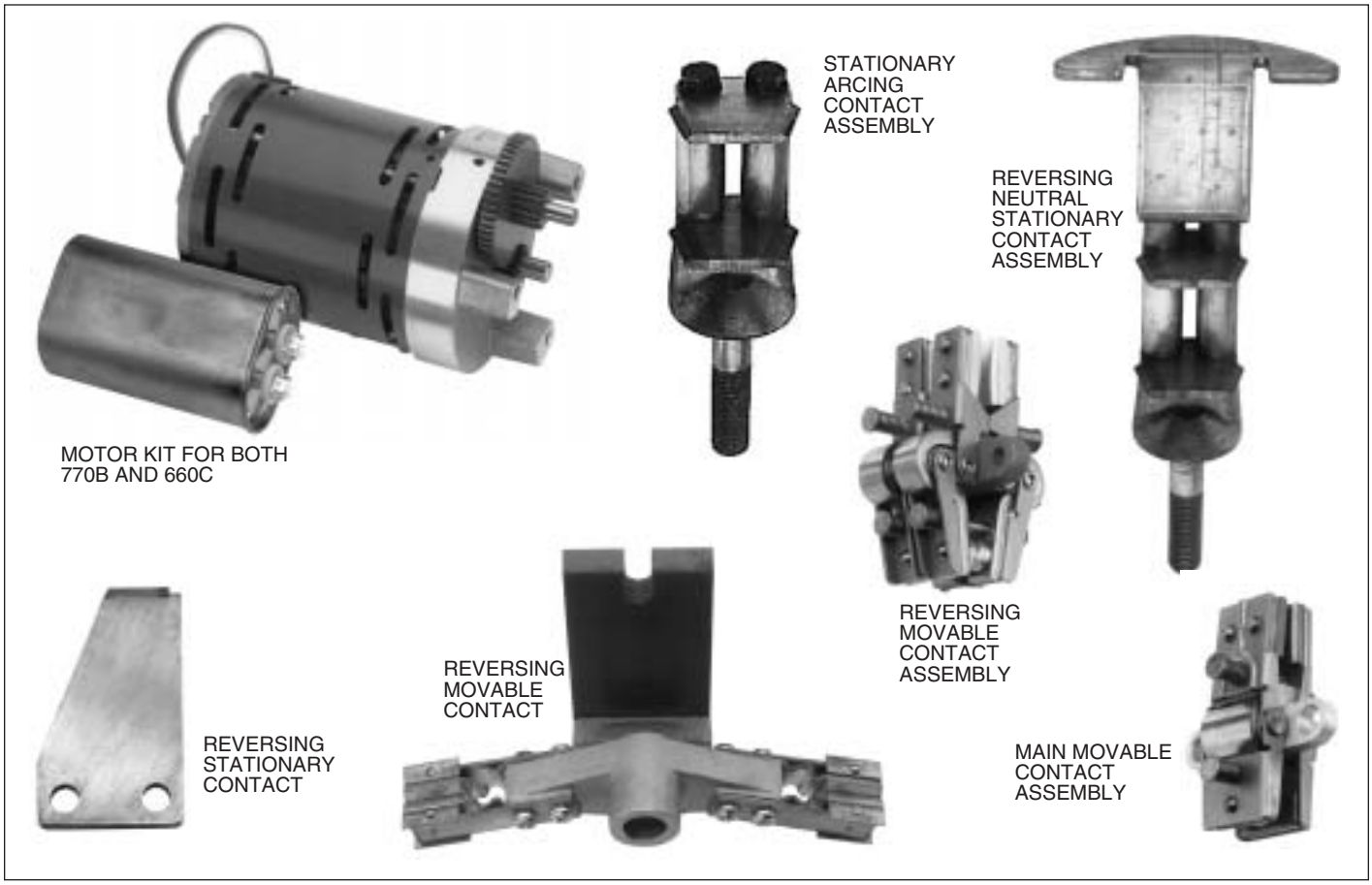

Figure 8-4.
Replacement parts for direct drive tap changer 660C

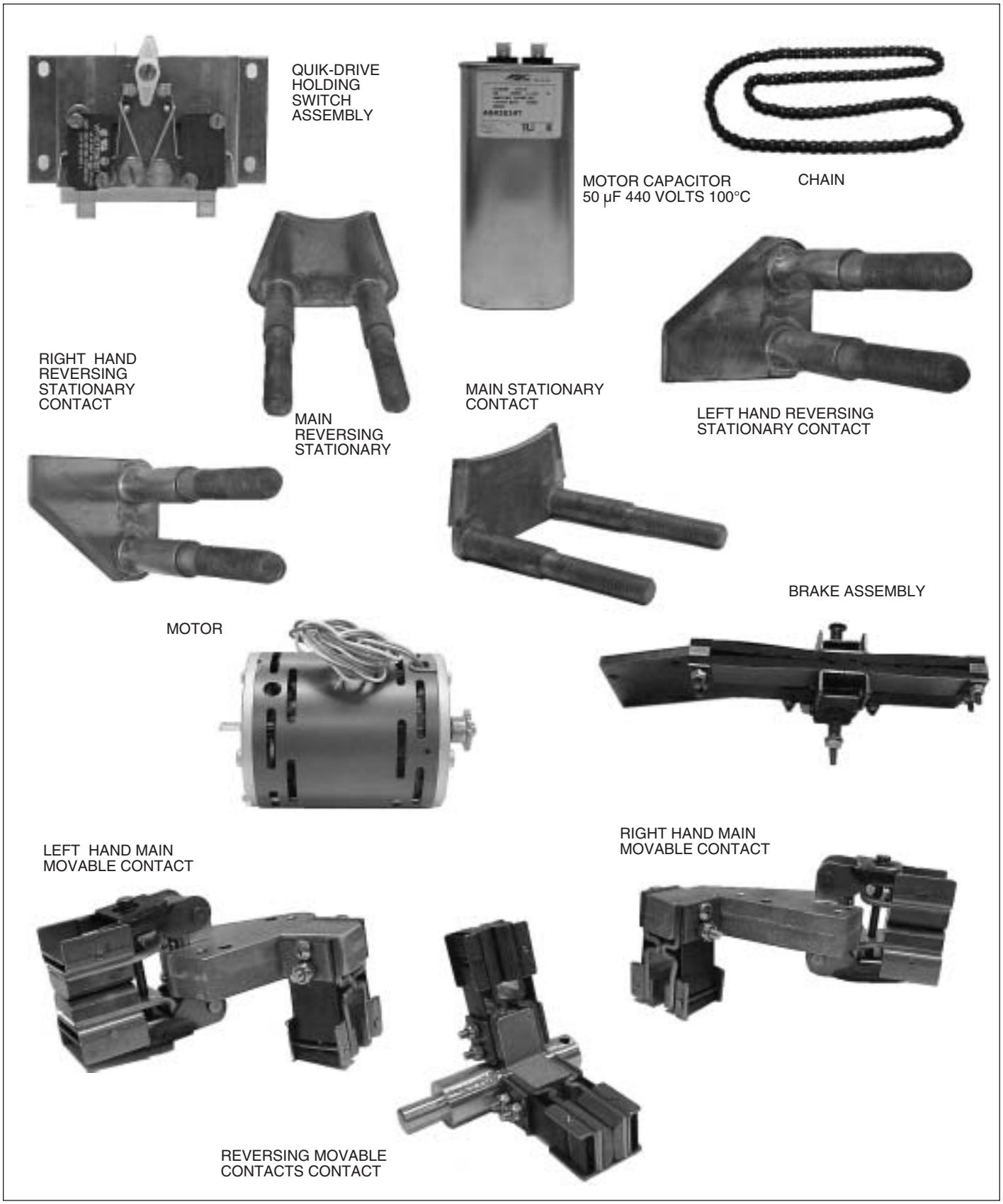

Figure 8-5.
Replacement parts for Quik-drive tap changer T875

Index

Section-Page Number

Accessing....1-4, 2-6
ADD-AMP Feature....1-15
  Hard....4-10
  Soft....3-15
Address, Communications....3-12
ANSI Type A....1-18
ANSI Type B....1-18
Arresters
  Series....1-15
  Shunt....1-15
Auto Inhibit....4-10
Automatic Operation....2-4
Back Panel
  Photo....1-3
  Schematic....6-11
Band (In-Band, Out-of-Band)....2-4
Baud Rate
  Comm. Channel....3-12
  Data Port....3-11
Bandwidth....2-7, 3-2, 3-10
Bi-directional Mode....4-5 to 4-6
Blocking Status....3-13
Bypassing....1-3 to 1-4
Cable
  Control....1-13, 7-3
Calendar....3-10, 4-1
Calibration....1-9 to 1-10, 3-9, 3-10, 6-4 to 6-5
Circuits
  Current....1-22
  Motor....1-22
  Power....1-18 to 1-19
  Voltage....1-19
Clock....3-10, 4-1
Co-generation Mode....4-7
Communications....3-11 to 3-13
  Channels....3-11 to 3-13
  Port....3-11 to 3-13
  Protocol....3-11 to 3-12
Communications, Digital....4-11, 7-2
Compensated Voltage....3-3
Configuration....2-8, 3-9
Contacts....5-3
Control
  Accuracy....2-1
  Basic Operation....2-1, 2-7
  Burden....2-1
  Cable....1-13, 7-3
  Design....2-1
  Features....2-1 to 2-3
  Operating Modes....2-8, 3-9
  Operation....2-4
  Programming....1-4 to 1-7
  Removal....1-11
  Replacement....1-11
  Set-up....1-4 to 1-7
  Specifications....2-1
Counter....3-2
Current....3-3 to 3-6
  Current Circuit....1-22
  Current Transformer....1-17, 2-9, 3-9
Current Calibration....3-10, 6-5
Data Acquisition....See Data Retrieval
Data Port....2-3, 3-11, 4-12
Data Reader....4-12, 7-1
  Program....4-12, 7-1
Data Retrieval....4-12
Data....See Calendar
De-energizing....1-12
Delta Connection....1-7, 2-8

Section-Page Number

Demand Time Interval....3-9
Diagnostics....2-5, 3-16
Differential P.T....4-1
Digital Communications....4-11 to 4-12, 7-2
Elevating Structure....1-3
Error Codes....2-5, 9-2
External Features, VR-32....2
External Source....1-3, 2-3
FAIL....2-5, 4-3
Failure....See FAIL
Fan Cooling....7-3
Features, VR-32 Regulator....1
Field Calibration....1-10
Firmware Version....3-15
Fooler Voltage Scheme (VR)....4-11
Frequency....3-5
Front Panel
  Features....2-2 to 2-3
  Removal....1-13
  Replacement....1-13
Function Codes
  Descriptions....3-2 to 3-17
  List....3-1, 9-3
Function Key Method....2-6
Fuses....1-20, 2-3
Handshaking....3-12
Harmonics....3-5
Heater....7-1
Holding Switch....1-23, 2-4
I.D., Regulator....3-9
Inspection
  Periodic....1-12
  Pre-installation....1-1
  Receiving....1-1
Installation....1-1
Interface
  Physical....4-11
  Board....4-12, 7-2
Interface Program....4-12, 7-2
Internal Construction....1-16
Internal Differential P.T....4-1
Internal Tap Terminals....1-20
Junction Box....3, 6-3
Keypad....2-3
kVA....3-4 to 3-5, 3-7
kW....3-4 to 3-5, 3-7
kvar....3-4 to 3-6
LCD Annunciator....2-4
Limit Switches....1-16, 6-4
Line Drop Compensation....2-7, 3-3, 3-9
Line Sync Characters....3-10
Local Mode (VR)....4-9
Locked Forward Mode....4-4
Locked Reverse Mode....4-5
Maintenance....1-12
Manual Operation....2-4
Master Reset....3-8
Metering
  Instantaneous....3-2 to 3-4, 4-1
  Demand Metering....3-5 to 3-7, 4-1
  Profile Recorder....4-2
Metering Reset....3-8
Motor....5-1
Motor Circuit....1-22
Nameplate....1-8, 1-9
Neutral Idle Mode....4-6
Neutral Light....1-11
Neutral Position....1-11

Section-Page Number

Oil
Characteristics 1-12
Maintenance 1-1
One-touch Method....2-6
Operation
Automatic 2-4
Manual 2-4
Operational Check (Control & Regulator)....1-9
Overall P.T. Ratio....1-21, 2-8, 3-9
Parameters ....See Function Codes
Password....See Security Code
Placing Into Service....1-3
Position Indicator ....1-15 to 1-16, 6-4
Potential Transformer Ratio....See Overall P.T. Ratio
Power
Reverse Flow ....See Reverse Power
Power Circuit....1-18 to 1-19
Power Factor....3-4, 3-5, 3-7
Profile Recorder ....3-15, 4-2 to 4-3
Protection, System ....2-4 to 2-5
Protocol 3-11, 4-11
P.T. Ratio....See Overall P.T. Ratio
Pulse Mode (VR) 4-10
Ratings 1-17
Ratio Correction
Transformer....1-3, 1-18 to 1-20, 2-8, 4-3, 6-1 to 6-2
Reactive Bi-directional Mode....4-7
Receiving....1-1
Regulation, Percent....3-4, 3-6
Regulator Configuration 2-8, 3-9
Remote (Latching) Mode (VR) 4-9
Removal from Service 1-11
Replacement Parts....8-1 to 8-3
Reset 3-8
Retanking 1-14
Reverse Idle Mode 4-5
Reverse Modes
Bi-directional 4-5
Co-generation Mode 4-7
Locked Forward 4-4
Reactive Bi-Directional....4-7
Locked Reverse 4-5
Neutral Idle Mode....4-6
Reverse Idle Mode....4-5
Reverse Power ....1-7, 3-9 to 3-10, 4-3
Reversing Switch ....5-1 to 5-2
SCADA....4-9 to 4-12
Analog....4-11 to 4-12
Digital....4-11 to 4-12
Relay....4-10
Schematics....6-7 to 6-11
Scroll Method 2-6
Security
Codes ....2-6, 3-16 to 3-17
Levels....3-1
Local Operator 4-12
Override 2-6, 3-16
System.... 2-6, 4-12
Sequential Mode 2-8
Series Transformer Regulator 1-19
Service Parts....8-1 to 8-3
Settings Upload 4-12
Set Voltage 2-7, 3-2, 3-10
Source Voltage Calculator 3-8, 4-1
Spare Parts ....8-1 to 8-3
Storing 1-1
Supervisory Control ....See SCADA
Surge Protection....1-15
Switches
Control (Auto/Remote-Off-Manual) 2-3
Draghand Reset....2-3
Holding....1-23, 2-4
Limit 1-16, 6-4
Manual Raise/Lower 2-3
Power (Internal-Off-External) 2-3

Section-Page Number

Reversing....5-1
Supervisory....2-3, 4-12
System Connections 1-2
System Line Voltage 1-21, 2-8, 3-9
System Protection ....2-4 to 2-5
System Status Codes....3-16
Tap Changer ....5-1 to 5-5
Contacts....5-3
Direct-drive 5-2, 5-4
Drive Mechanisms 5-2
Motor....5-1
Operation ....5-1 to 5-5
Quik Drive 5-2, 5-4
Reversing Switch 5-1
Spring-drive....5-3
Tap Changing Inhibiting....See Reverse Power
Tap Connections 1-21
Tap Position Indication....3-3, 3-6, 4-3
Reset....3-8
Temperature Range, Control....2-1
Temperature Rise....1-1
Terminals
External Power....2-3
Voltmeter....2-3
Threshold, Reverse 3-11
Time ....See Clock
Time Delay....2-7, 3-2, 3-10
Time Integrating Mode 2-8
Transducer Connections 4-11
Transmit Enable Delay 3-13
Troubleshooting ....6-1 to 6-11
Control ....6-2 to 6-3
Junction Box ....6-3 to 6-5
Position Indicator 6-3
Regulator ....6-1 to 6-3
Unloading 1-1
Untanking 1-13
Voltage
Averaging Mode....2-8
Circuits....1-19
Compensated....3-3
Differential....4-1
Limiting 3-15, 4-8
Load.... 3-5 to 3-7
Reduction ....3-13 to 3-14, 4-9
Set 2-7, 3-2
Source....3-3
System Line....1-21, 2-8, 3-9
Voltage Calibration....1-10, 3-9, 6-5
Watchdog Diagnostics....See Diagnostics
Wiring Diagrams ....4-10 to 4-11, 6-5 to 6-11

TABLE 9-1
Security Codes

Security Level	Factory-set Security Code
0	No Code Required
1	1234
2	12121
3	32123

TABLE 9-2
Error Codes

Error Code	Error Message
XX ERROR 1	Input Value too Low
XX ERROR 2	Input Value too High
XX ERROR 3	Improper Security to Change
XX ERROR 4	Invalid Security Code

Note: XX is the Function Code at which the error was made.

TABLE 9-3
CL-5 Series Regulator Control Function Codes

Function Code	Function	Security Level Change/Reset
FORWARD CONTROL SETTINGS		
0	Operation Counter (Q, R_, R¯, 1, 2, 3, 4, 5, 6)*	3*
1	Set Voltage	2
2	Bandwidth, volts	2
3	Time Delay, seconds	2
4	Line Compensation Resistance, volts	2
5	Line Compensation Reactance, volts	2
INSTANTANEOUS METERING		
6	Load Voltage, Secondary	
7	Source Voltage, Secondary	
8	Compensated Voltage, Secondary	
9	Load Current, Primary, amperes	
10	Load Voltage, Primary, kV	
11	Source Voltage, Primary, kV	
12	Tap Position & Percent Regulation (TP, %)	3
13	Power Factor	
14	kVA Load	
15	kW Load	
16	kvar Load	
17	Line Frequency	
18	Voltage Harmonics (THD, 3, 5, 7, 9, 11, 13), percent	
19	Current Harmonics (THD, 3, 5, 7, 9, 11, 13), percent	
FORWARD DEMAND METERING		
20	Load Voltage (H-D, T; L-D, T; P)	1
21	Compensated Voltage (H-D, T; L-D, T, P)	1
22	Load Current (H-D, T; L-D, T; P), amperes	1
23H	Power Factor @ Max kVA Demand	
23L	Power Factor @ Min kVA Demand	
24	kVA Load (H-D, T; L-D, T; P)	1
25	kW Load (H-D, T; L-D, T; P)	1
26	kvar Load (H-D, T; L-D, T; P)	1
27	Max Tap Pos & Max % Boost (TP-D, T; %)	1
28	Min Tap Pos & Max % Buck (TP-D, T; %)	1
29	Source Voltage **(H-D, T; L-D, T; P)	
REVERSE DEMAND METERING		
30	Load Voltage (H-D, T; L-D, T; P)	1
31	Compensated Voltage (H-D, T; L-D, T; P)	1
32	Load Current (H-D, T; L-D, T; P), amperes	1
33H	Power Factor @ Max kVA Demand	
33L	Power Factor @ Min kVA Demand	
34	kVA Load (H-D, T; L-D, T; P)	1
35	kW Load (H-D, T; L-D, T; P)	1
36	kvar Load (H-D, T; L-D, T; P)	1
37	Source Voltage**(H-D, T; L-D, T; P)	
MASTER METERING & TAP POSITION INDICATION RESET		
38	Reset	1
CONFIGURATION		
39	Source Voltage Calculation 0 = Off, 1 = On; 1 = Type A, 2 = Type B	2
40	Regulator Identification	2
41	Regulator Configuration 0 = Wye, 1 = Delta Lag, 2 = Delta Lead	2
42	Control Operating Modes 0 = Sequential, 1 = Time Integrating, 2 = Voltage Averaging	2
43	System Line Voltage, volts	2
44	Overall P.T. Ratio	2
45	C.T. Primary Rating, amps	2
46	Demand Time Interval, minutes	2
49	Tap Changer Selection 0 = Quik Drive, 1 = Spring/Direct Drive	
CALIBRATION		
47	Voltage Calibration, volts	3
48	Current Calibration, amps	3
CALENDAR/CLOCK		
50	Date & Time Set (D, T, 1, 2, 3, 4, 5, 6) 1 = Year, 2 = Month, 3 = Day, 4 = Hour, 5 = Minute, 6 = Second	3
REVERSE CONTROL SETTINGS		
51	Set Voltage, volts	2
52	Bandwidth, volts	2
53	Time Delay, seconds	2
54	Line Compensation, Resistance, volts	2
55	Line Compensation, Reactance, volts	2
56	Reverse Sensing Mode 0 = Locked Forward, 1 = Locked Reverse 2 = Reverse Idle, 3 = Bi-Directional 4 = Neutral Idle, 5 = Co-Generation 6 = Reactive Bi-directional	2
57	Reverse Threshold %	2
COMMUNICATIONS		
60	Channel 1 (Data Port) Baud Rate	2
61	Control Communication Protocol XX.03 = Data 2179	
62	Channel 1 (Data Port) Status	
63	Channel 2 (Comm Port) Status	
64	Control Communications Address	2
65	Channel 2 (Comm Port) Baud Rate	2
66	Comm Port Handshake Mode	2
67	Comm Port Resynch Time Chars.	2
68	Comm Port Transmit Enable Delay (On, Off)	2
69	Blocking Status 0 = Normal, 1 = Blocked	2
VOLTAGE REDUCTION		
70	Voltage Reduction Mode 0 = Off, 1=Local/Digital Remote, 2 = Analog Remote (Latching), 3 = Pulse 10 = Off, 11 = Local/Digital Remote, 12 = Analog Remote (Latching), 13 = Pulse (Utilizing 10-13 activates tap to neutral)**	2
71	% Voltage Reduction In Effect (Read Only)	
72	Local Reduction %	2
73	Remote #1 %	2
74	Remote #2 %	2
75	Remote #3 %	2
76	# of Pulse Reduction Steps	2
77	% of Voltage Reduction Per Pulse Step	2
79	Soft ADD-AMP limits** 0 = Off, 1 = On; High limit; Low limit;	2
VOLTAGE LIMITER		
80	Voltage Limiting Mode 0 = Off, 1 = High Limit Only 2 = High and Low Limits	2
81	High Voltage Limit, volts	2
82	Low Voltage Limit, volts	

Notes:
H-D, T = Highest (maximum) value since last reset, date & time
L-D, T = Lowest (minimum) value since last reset, date & time
P = Present value
THD = Total Harmonic Distortion
TPI = Tap position indication

Q = Quantity of operations since last change
R_ = Date of last counter change
R¯ = Time of last counter change
* Change/Reset and Sub-function codes only on CL-5E control
** CL-5E only

See next page for more function codes

TABLE 9-3, Continued
CL-5 Series Regulator Control Function Codes

Function Code	Function	Security Level Change/Reset
METERING PROFILE RECORDER		
85	Profile Period (5, 10, 15, 30, 60, 90, 120 min.)** 1 = Parameter 1, 2 = Parameter 2, 3 = Parameter 3, 4 = Parameter 4, 5 = Data Retrieval Mode (0 = Off, 1 = On)	1
WATCHDOG DIAGNOSTICS		
89	Firmware Version #	
90	Number of Defaults	
91	Self Test	
93	Number of EEPROM Corrections	3
94	Number of Resets	3
95	System Status Code (Read Only) 0 All Systems Good 1 EEPROM Write Failure 2 EEPROM Erase Failure 3 Frequency Detection Failure 4 No Sampling Interrupt-Failure 5 Analog-To-Digital Converter-Failure 6 Invalid Critical Parameters-Failure 7 No Input Voltage Detected-Warning 8 No Output Voltage Detected-Failure 9 No Input & Output V Detected-Failure 10 TPT No Neutral Sync Signal-Warning	
SECURITY ACCESS		
92	Security Override (1 = Override 1, etc.)	3
96	Level 1 Security Code	3
97	Level 2 Security Code	3
98	Level 3 Security Code	3
99	ENTER SECURITY CODE	

** CL-5E control only.

For additional information, contact:

COOPER POWER SYSTEMS
DISTRIBUTION TRANSFORMERS
1900 EAST NORTH STREET
WAUKESHA, WI 53188-3899
(262) 547-1251

For service-related inquiries, e-mail us at:

tpservicegroup@cooperpower.com

COOPER Power Systems

©2001 Cooper Industries, Inc.
ADD-AMP™ is a registered trademark of Cooper Industries, Inc.
McGraw-Edison® is a trademark of Cooper Industries, Inc.

P.O. Box 1640
Waukesha, WI 53187
http://www.cooperpower.com

Voltage Regulating Apparatus

32-Step Regulator

System Operation and Troubleshooting

SERIAL NUMBER

78 – year of manufacture.

Z – Factory location (Z – Zanesville, V – Visalia, N – Nacogdoches).

A – Month of manufacture (A – Jan., B – Feb., C – Mar., D – April, E – May, F – June, G – July, H – Aug., J – Sept., K – Oct., L – Nov.; N – Dec.).

XXX – Arbitrary numbers and letters assigned per factory work order.

001 – Serial number of unit on a given factory work order (001-999).

78 Z A XXX 001

This manual pertains to the regulator with serial number shown in box above.

CONTENTS

INTRODUCTION 1
CONTROLS 1
MAIN FRAME REMOVAL 3
PRINTED CIRCUIT BOARD REMOVAL FROM THE MAIN FRAME 3
SYSTEM OPERATION 6
Potential Supply 6
Manual Operation 6
Automatic Operation 7
Voltage Divider 8
Printed Circuit Logic 9
PRINTED CIRCUIT BOARD (PCB) 10
Power Supply 10
Input and Filtering 10
Sensing 11
Motor Relays 11
Time Delay 12
Motor Current Sensing 12
CALIBRATION CHECK 12
TIME DELAY CHECK 14
RECALIBRATION 14
TROUBLESHOOTING COMPLETE REGULATOR IN SERVICE 15
TROUBLESHOOTING MAIN FRAME AND ASSOCIATED COMPONENTS 19
TROUBLESHOOTING PRINTED CIRCUIT BOARD 20

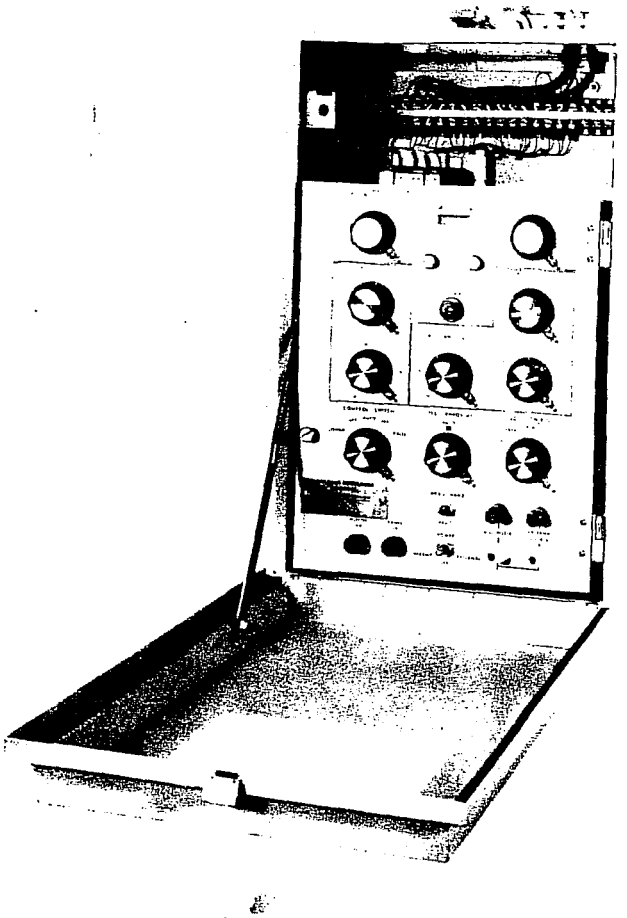

INTRODUCTION

This section is designed to fully acquaint the user with details of the operation of the 32-step regulator and to provide a rapid means of diagnosing malfunctions and determining the best approach to service restoration.

The initial portion is a complete discussion of the control functions, including sensing, voltage correction, and tap changer operation.

The latter portion is a troubleshooting guide for the regulator and the control.

CONTROLS

All of the programming and operating controls are mounted on the front panel (Figure 1). All indicators (neutral light, band limit indicators, and operations counter) are located at the top of the panel where they remain visible even while the control is checked or programmed. All programming

These instructions do not claim to cover all details or variations in the equipment, procedure, or process described, nor to provide directions for meeting every possible contingency during installation, operation, or maintenance. When additional information is desired to satisfy a problem not covered sufficiently for the user's purpose, please contact your McGraw-Edison Power Systems Division sales engineer.

McGraw-Edison Company
Power Systems Group
Post Office Box 2850
Pittsburgh, PA 15230

July 1978
New Issue

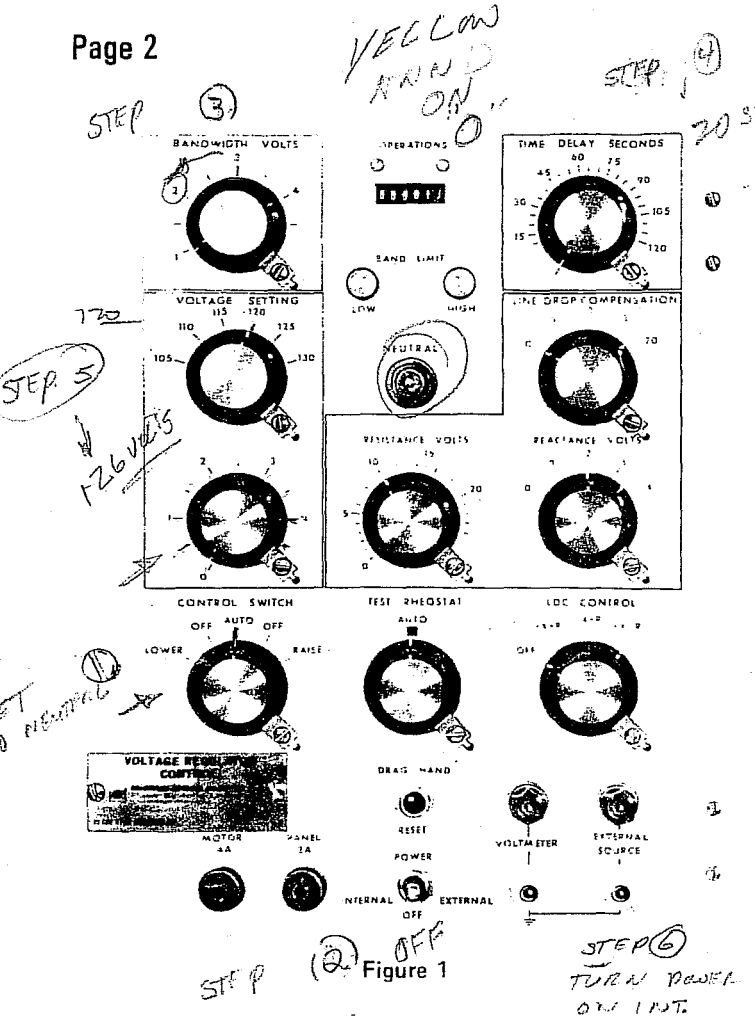

Figure 1

controls, such as BANDWIDTH VOLTS, VOLTAGE SETTING, TIME DELAY SECONDS, LINE-DROP COMPENSATION, RESISTANCE VOLTS, and REACTANCE VOLTS are grouped in the upper section of the control panel. All operating controls such as the CONTROL SWITCH, TEST RHEOSTAT, LDC CONTROL, MOTOR fuse, PANEL fuse, position indicator, DRAG HAND RESET, INTERNAL/EXTERNAL POWER SWITCH, VOLTMETER terminals, and EXTERNAL SOURCE terminals are grouped in the lower section of the control panel. The separation of programming controls and operating controls in this manner allows an operational check of the control without disturbing the program settings.

The BANDWIDTH VOLTS setting has a range from 1 to 4½ volts in half-volt steps. The incremental-step settings allow for factory selection of resistive components which are properly trimmed initially. The preselection and proper trimming of components provides a control that only requires a one-step and a one-spot calibration.

The VOLTAGE SETTING consists of an incremental coarse adjustment ranging from 105 to 130 volts in five-volt steps, and a continuously adjustable fine setting ranging from 0 to 4½ volts. The coarse and fine adjustments combine to offer an infinite number of settings between 105 and 134½ volts.

Line-drop compensation RESISTANCE VOLTS is continuously adjustable from 0 through 24 volts.

Line-drop compensation REACTANCE VOLTS employs a coarse adjustment in five-volt increments, and a fine adjustment in one-volt increments to provide a range of 0 to 24 volts in one-volt steps.

The TIME DELAY SECONDS setting is continuously adjustable over a range of 10 through 120 seconds. It is also provided with a special setting, the unsealed full counter-clockwise mark on the panel, that has a short delay for test purposes.

The CONTROL SWITCH features a LOWER-OFF-AUTO-OFF-RAISE position sequence. This is preferred for operational ease. In selecting the automatic mode, it is not necessary to pass from one of the manual positions through another. This eliminates accidental tap changer operations.

The TEST RHEOSTAT offers operating personnel a means of checking the control without disturbing the programmed setting. The TEST RHEOSTAT varies the voltage input to the sensing circuit and also varies the voltage at the VOLTMETER test terminals.

The LDC CONTROL polarity switch provides the necessary settings to employ the regulator in grounded wye, closed delta, or open delta connections. In addition, there is an OFF position to facilitate testing without disturbing the programmed settings of the control.

Fuses for the MOTOR and PANEL circuits are clearly marked. Spare fuses are provided within the control cabinet. The fuse holders are panel-mounted for ease of replacement and operational checks.

The DRAG HAND RESET functions in all tap changer positions and also offers a neutral light test in any position other than neutral. The INTERNAL/EXTERNAL switch clearly indicates the positions of INTERNAL, OFF, and EXTERNAL.

The VOLTMETER and EXTERNAL SOURCE terminals are color coded. They are located on the hinge side of the control panel. These precautions minimize the possibility of mishap.

To open the front panel, unscrew the captive knurled knob on the left side of the panel. With the panel and main frame of the control open, the back of the panel is visible.

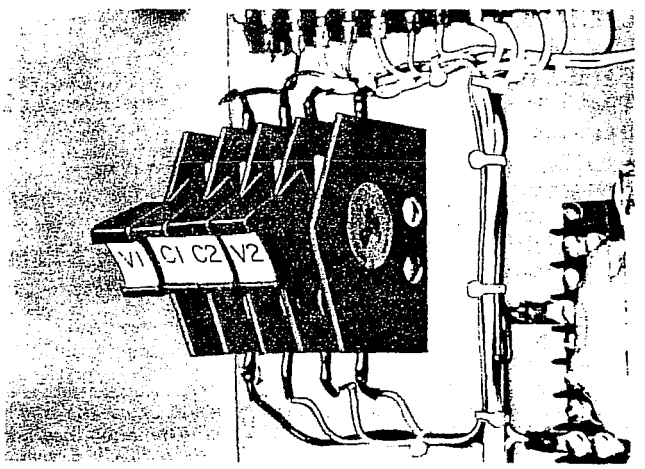

Figure 2

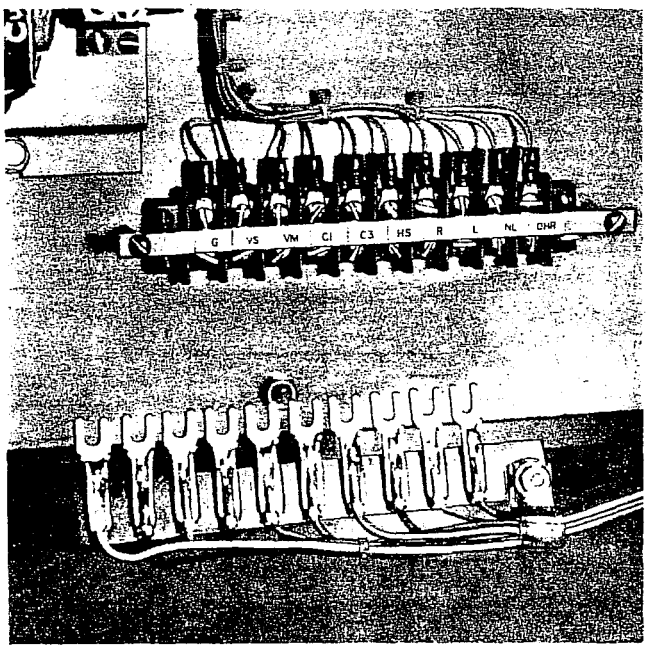

Figure 3

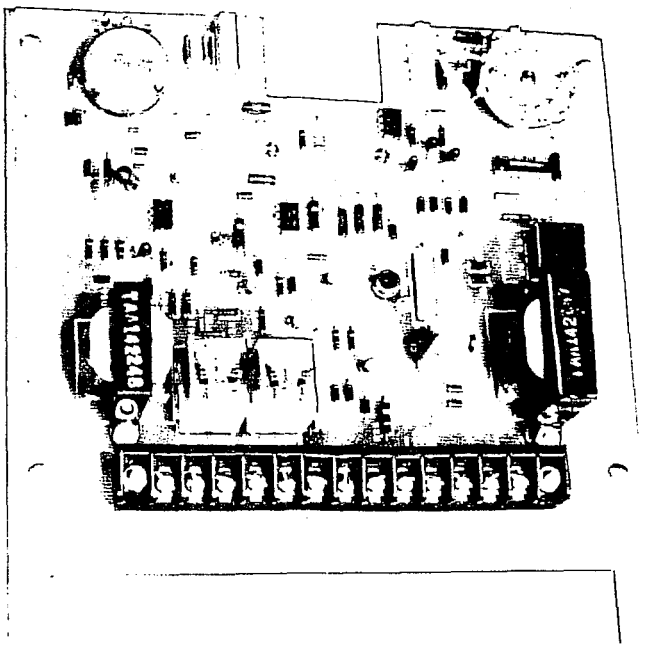

Figure 4

A set of visible disconnects and shorting devices provide ready disconnection of all incoming power from the potential supply and automatic shorting and disconnection of the current transformer circuit (Figure 2).

The leads from the main frame of the control are fitted with a fanning strip (Figure 3). This organizes the leads for ready removal or reinstallation. The terminals need only be loosened for the removal of the leads.

MAIN FRAME REMOVAL

To remove the main frame from the cabinet, take the following steps in the exact order outlined:

1. Pull the V1 and V2 disconnect switches.
2. Pull the C1/C2 current disconnect/shorting switch.
3. Loosen the screws on the interconnecting terminal strip on the rear panel, and pull the fanning strip free.
4. Swing the panel out and lift it free of the slip hinges.

NOTE: Care should be taken to prevent damage to the components under the main frame shelf during handling.

Main frame replacement is accomplished by following the above steps in the reverse order.

With the control main frame removed, or with the control main frame still attached to the control, the printed circuit elements are visible and accessible for testing.

PRINTED CIRCUIT BOARD REMOVAL FROM THE MAIN FRAME

The printed circuit board can be physically removed from the main frame and yet remain electrically connected for test purposes. To keep the printed circuit board electrically connected to the main frame, follow the numbered steps, but do not disconnect the fanning terminal strip as described in step No. 1.

1. Loosen the screws on the interconnecting terminal strip on the main frame and drop the fanning strip clear (Figure 3).
2. Remove the counter quick disconnects.
3. Loosen the lock screws on the BANDWIDTH VOLTS knob and the TIME DELAY SECONDS knob and turn the locking strips until they clear the knobs.
4. Loosen the knob set screws and remove the knob.
5. Remove the panel nuts from the bushings under the knobs.
6. To allow free movement of the printed circuit board, loosen the two side screws that are engaged in slots at the bottom of the board frame.
7. Swing the top of the board away from the front panel until the control shafts are clear. Lift the board free of the slots in the side bracket (Figure 4).

The replacement of the printed circuit board is accomplished by following the above steps in the reverse order. To correctly orient the BANDWIDTH VOLTS knob, observe the flattened shaft and corresponding knob cavity.

The TIME DELAY SECONDS knob is not flattened. To properly orient this knob, observe the following:

1. Rotate the shaft to the extreme counterclockwise position.
2. Replace and align the knob index with the unscaled mark on the panel.
3. Tighten the set screw.

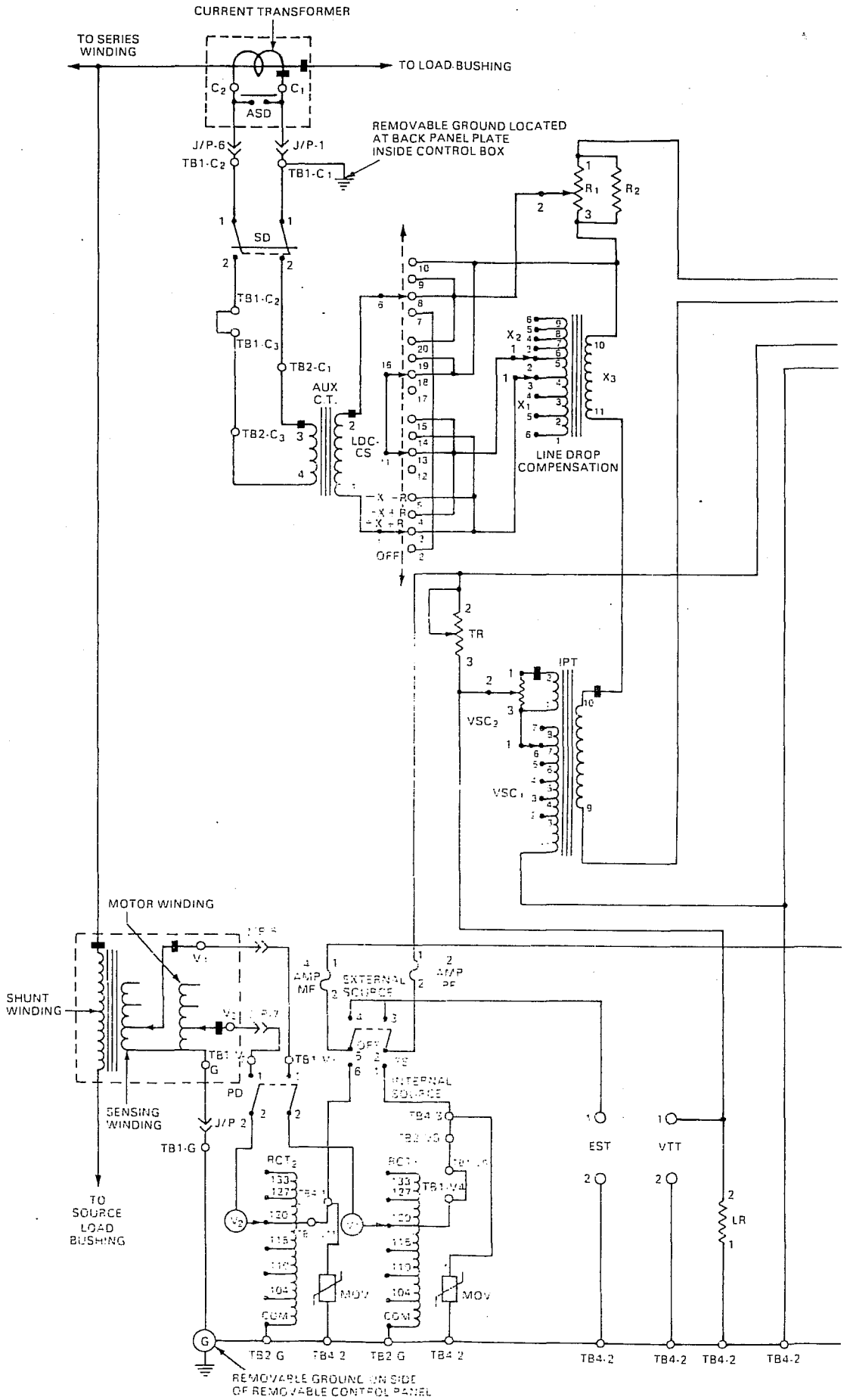
CURRENT TRANSFORMER
TO SERIES WINDING
TO LOAD BUSHING
C2
C1
ASD
REMOVABLE GROUND LOCATED AT BACK PANEL PLATE INSIDE CONTROL BOX
J/P-6
J/P-1
TB1-C2
TB1-C1
SD
TB1-C2
TB1-C3
TB2-C1
AUX C.T.
TB2-C3
LDC-CS
OFF
R1
R2
X2
X3
X1
LINE DROP COMPENSATION
TR
IPT
VSC3
VSC1
MOTOR WINDING
SHUNT WINDING
SENSING WINDING
AMP MF
EXTERNAL SOURCE
INTERNAL SOURCE
PD
J/P 2
TB1-G
TO SOURCE LOAD BUSHING
MOV
COM
EST
VTT
LR
TB2 G
TB4 2
REMOVABLE GROUND ON SIDE OF REMOVABLE CONTROL PANEL

Figure 5

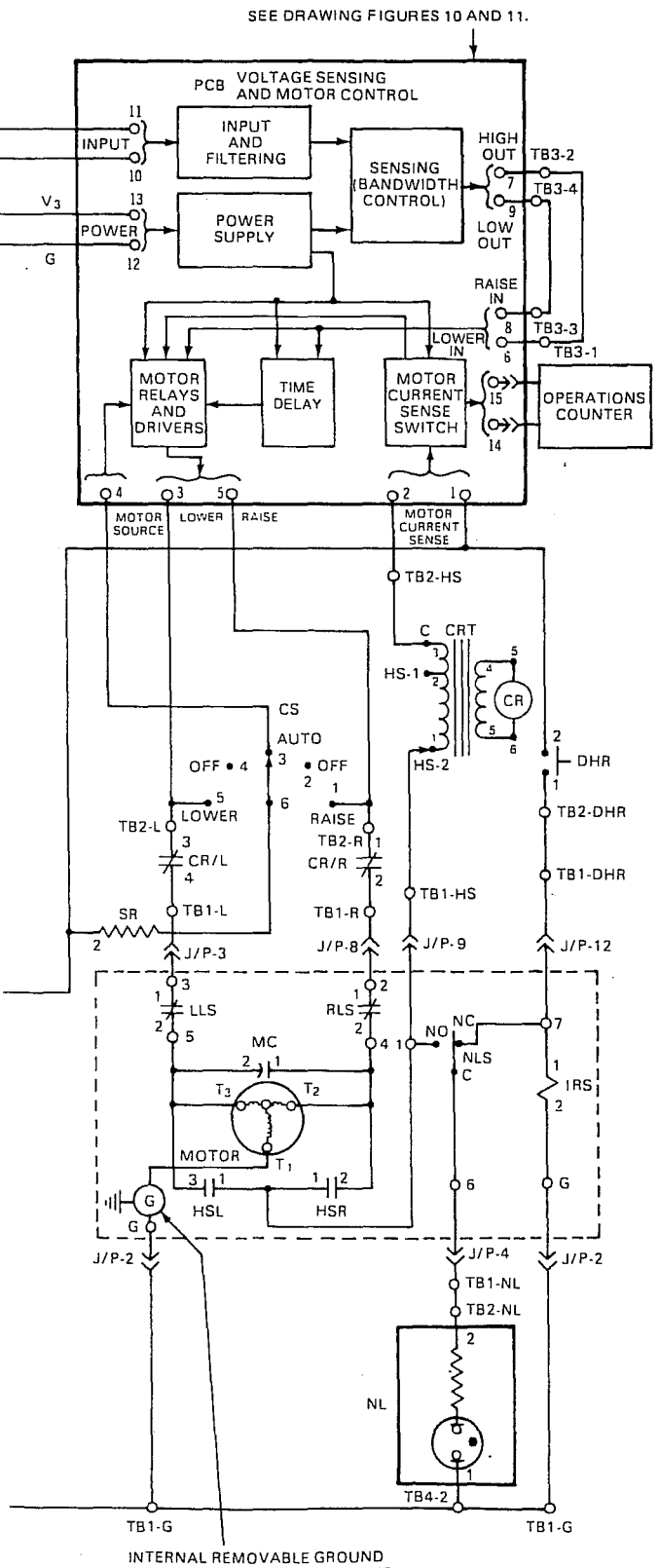

A.C.T. – Auxiliary Current Transformer
A.S.D. – Automatic Shorting Device
C.R. – Current Relay
C.R/L – Current Relay Lower Contact
C.R/R – Current Relay Raise Contact
C.R.T. – Current Relay Transformer
C.S. – Control Switch
D.H.R. – Drag Hand Reset
E.S.T. – External Source Terminals
H.S.L. – Holding Switch Lower
H.S.R. – Holding Switch Raise
Input – Input Potential Transformer
I.R.S. – Indicator Reset Solenoid
J/P – Connector Between Control and Tank (J = Jack, P = Plug)
L.D.C.C.S. – Line Drop Compensation Control Switch
L.L.S. – Lower Limit Switch (Position Indicator)
L.R. – Loading Resistor
M.C. – Motor Capacitor
M.F. – Motor Fuse
M.O.V. – Metal Oxide Varistor for Surge Protection
N.L. – Neutral Light
N.L.S. – Neutral Light Switch
P.C.B. – Printed Circuit Board
P.D. – Potential Opening Device
P.F. – Panel Fuse
P.S. – Power Switch
R_1 – Line Drop Compensating Resistance Setting
R_2 – Trim Resistor
$R.C.T_1$ – Ratio Correction Transformer for Sensing Circuit
$R.C.T_2$ – Ratio Correction Transformer for Motor Circuit
R.L.S. – Raise Limit Switch (Position Indicator)
S.D. – Current Shorting Device
S.R. – Series Resistor
T.R. – Test Rheostat
V.M. – Motor Voltage
V.S. – Sensing Voltage
$V.S.C_1$ – Coarse Voltage Setting Control
$V.S.C_2$ – Fine Voltage Setting Control
V.T.T. – Voltage Test Terminals
X_1 – Line Drop Compensating Reactance Coarse Setting
X_2 – Line Drop Compensating Reactance Fine Setting
X_3 – Line Drop Compensating Reactor

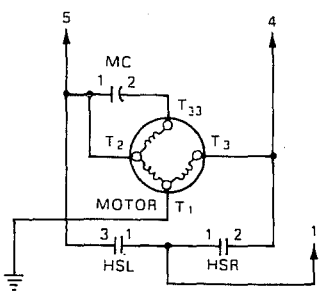

DETAIL "A"

NOTES:

1. Portions of schematic shown in dotted enclosures are located in regular tank.
2. The main illustration shows spring drive circuitry, while Detail "A" shows direct drive circuitry. Note that tap HS-1 on CRT is used with direct drive mechanisms.

4. Check and readjust if required, because this alignment is critical.

By leaving the fanning strip attached to the printed circuit board with the printed circuit board removed from the control, it is possible to thoroughly test the entire main frame assembly. The fanning strip concept provides reliable screw-down type terminals for rapid removal and replacement.

SYSTEM OPERATION

Figure 5 is the overall system schematic which will be illustrated in segments to aid in the understanding of its operation.

POTENTIAL SUPPLY

The shunt winding, the two tapped potential windings, the potential disconnects, the fine adjusting ratio transformers, metal-oxide varistors, internal/external switch, panel fuses, and external source supply terminal are all shown in Figure 6.

Two potential windings are provided on the main core-and-coil assembly. The windings are tapped to provide coarse adjustment of ratio correction. The tap selection will determine the major changes in voltage. The taps are accessible at a terminal board under the main handhole in the regulator cover. Connections are made with push-on type terminals.

Two potential sources are fed through visible disconnects on the rear panel. The disconnects isolate the control completely from the potential winding. Each supply from the potential winding feeds its own fine adjustment ratio correcting transformer that is mounted on the rear panel. The two ratio correcting transformers, which are tapped at 104, 120, 127, and 133 volts, provide the fine voltage adjustment.

For example, a nominal voltage of 7620 volts has a 60:1 potential ratio optimum for 7200 volts on the main potential winding. Taps, under the handhole cover, also provide 4800 volts (40:1) and 2400 volts (20:1). The two fine adjustment ratio transformers in the control will offer 120 volts at 7620 volts and 7970 volts by tap selection. This will allow the same programming for 2400 volts, 4800 volts, 7200 volts, 7620 volts, and 7970 volts. See Table 1. These two sources are then fed to the double-pole, double-throw, three-position INTERNAL/OFF/EXTERNAL power supply switch. Metal-oxide varistors are provided for surge protection on each circuit.

One circuit is fused at four amps and is the power supply for the tap changer. The other is fused at two amps and is the supply for the printed circuit board. The external source terminal is provided to allow the regulator to be fed through the four amp and two amp fuse should it be desired to operate the regulator from an external voltage supply.

MANUAL OPERATION

The tap changer associated circuitry including the four amp supply bus, SR resistor, control switch, CR relay and transformer, tap changer motor circuitry, neutral light, drag hand reset, and other associated circuitry, is shown in Figure 7. The four amp supply bus provides power for the tap changer. Setting the CONTROL SWITCH on LOWER feeds through the SR resistor, control switch, one of the normally closed contacts on the CR relay, and through the lower switch (LLS), to the motor and capacitor. The energized motor begins to turn, closing the holding switch contact, HSL. When the contact HSL is closed by the cam, which is coupled directly to the motor, an alternate source of 120 volts is provided from the same four amp bus. This alternate source is fed through the printed circuit board to the motor current sensing section which will be described later. It is then fed through a transformer to the CR relay and then through the holding switch, HSL, to the motor and capacitor. The motor is now energized through an independent source. Because current is present, the CR relay energizes and opens both CR relay contacts. One CR relay contact is in the LOWER circuit, the other CR relay is in the RAISE circuit. Direct drive tap changer mechanisms, 660C and 770B must be assured of an uninterrupted power supply so that they can complete the tap change. By energizing the motor through the alternate source from the four amp bus, through the CR relay transformer and through the holding switch contact, HSL, assures that the motor will be

Table 1
Tap Connections and Voltage Levels

Regulator Voltage Rating	Nominal Circuit Voltage	Potential Winding Tap (Internal)	Ratio Adj. Trans. Tap (Control)	Nominal Control Setting	Overall Potential Ratio
2500	2500	—	—	125	20:1
20:1	2400	—	—	120	20:1
5000	5000	4.8	120	125	40:1
40:1	4800	4.8	120	120	40:1
	4160	4.8	104	120	34.6:1
	2400	2.4	120	120	20:1
7620	7980	7.2	133	120	66.5:1
60:1	7620	7.2	127	120	63.5:1
	7200	7.2	120	120	60:1
	4800	4.8	120	120*	40:1*
	4160	4.8	104	120*	34.6:1*
	2400	2.4	120	120	20:1
13800	13800	13.8	120	120	115:1
115:1	13200	13.8	115	120	110:1
	12000	13.8	104	120	100:1
	7980	6.9	133	125	63.5:1
	7620	6.9	133	120	63.5:1
	7200	6.9	120	125	57.5:1
	6900	6.9	120	120	57.5:1
14400	14400	14.4	120	120	120:1
120:1	13800	14.4	115	120	115:1
	13200	14.4	110	120	110:1
	12000	14.4	104	115	104:1
	7950	7.2	133	120	66.5:1
	7620	7.2	127	120	63.5:1
	7200	7.2	120	120	60:1
19920	19920	19.9	120	120	166:1
166:1	14400	14.4	120	120*	120:1*
	13800	14.4	115	120*	115:1*
	13200	14.4	110	120*	110:1*
	12000	14.4	104	115*	104:1*
	7980	7.2	133	120*	66.5:1*
	7620	7.2	127	120*	63.5:1*
	7200	7.2	120	120*	60:1*

*Nominal control setting and overall potential ratio may vary slightly.

continuously energized until it completes the tap change. This is assured even if the sensing signal disappears or if an operator attempts a manual override.

Upon completion of the tap change, a cam, which is directly coupled to the motor, opens the holding switch contact HSL. The tap changer will repeat the cycle and continue in the lower direction until:

1. The operator changes the control switch.
2. The position indicator limit switch is opened.
3. The tap changer runs against a mechanical stop.

Running against a mechanical stop will only occur if a limit switch fails in the position indicator. As the tap changer drives the position indicator drive shaft, the lower contact in the position indicator is opened at a predetermined ADD-AMP setting, or at 16 lower. Then, if the control continues to call for a tap change, there will be no power to initiate the operation of the motor. This is how the lower limit switch contact functions to limit the travel of the tap changer.

The neutral light switch, NLS, is fed from two sources of supply on the four amp bus. The tap changer closes the neutral light switch, NLS, when the tap changer reaches the neutral position. This energizes the neutral light, NL. Note also that the drag hand reset, DHR, will energize the neutral light at every position except neutral. The drag hand reset functions as a neutral light test switch at any position other than neutral. The indicator drag hands will reset in any position, including neutral.

AUTOMATIC OPERATION

The sequence of automatic operation is similar to the manual operation. With the control switch in the AUTO position, a raise or a lower signal from the printed circuit will also produce the same cycle of tap changer operation. Raise operations are identical to lower operations involving only those components for that part of the circuit.

The transformer that feeds the CR relay has two taps. One tap provides the proper current for the operation of the spring drive tap changer, 928B (rated 219 amps and 95 kv

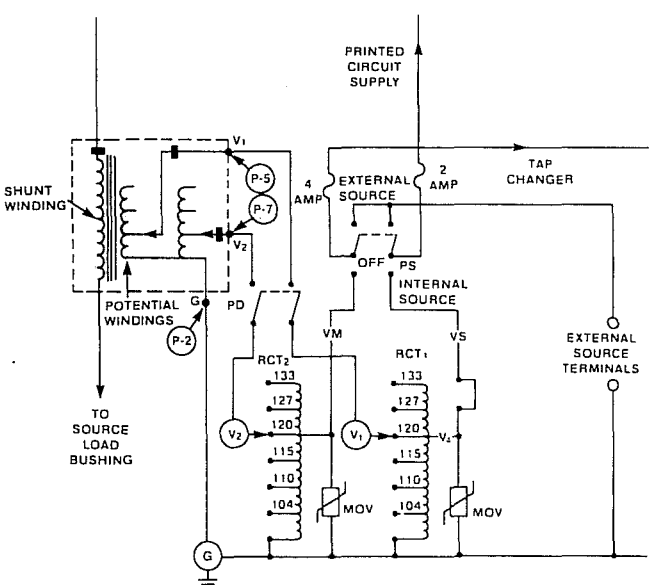

Figure 6

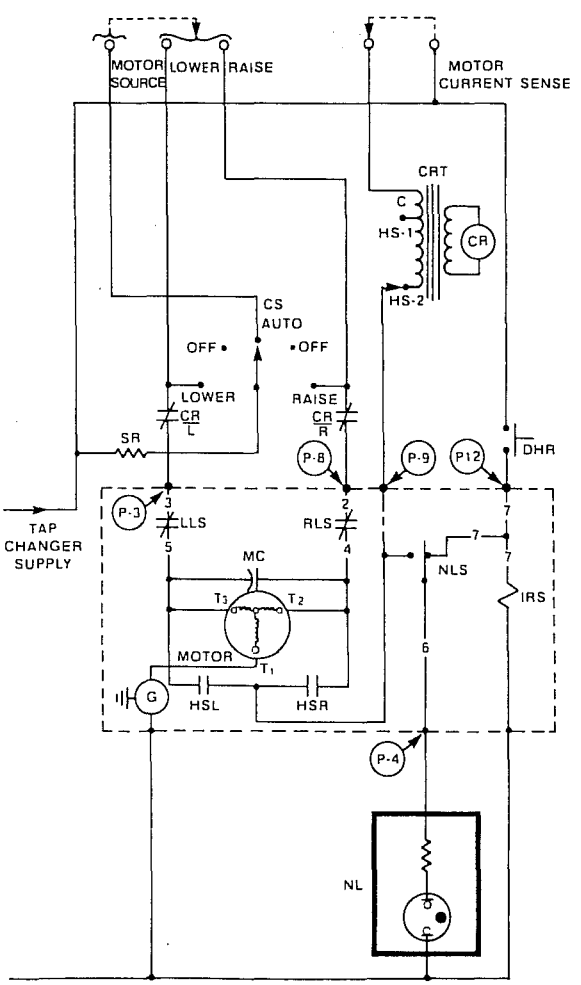

Figure 7

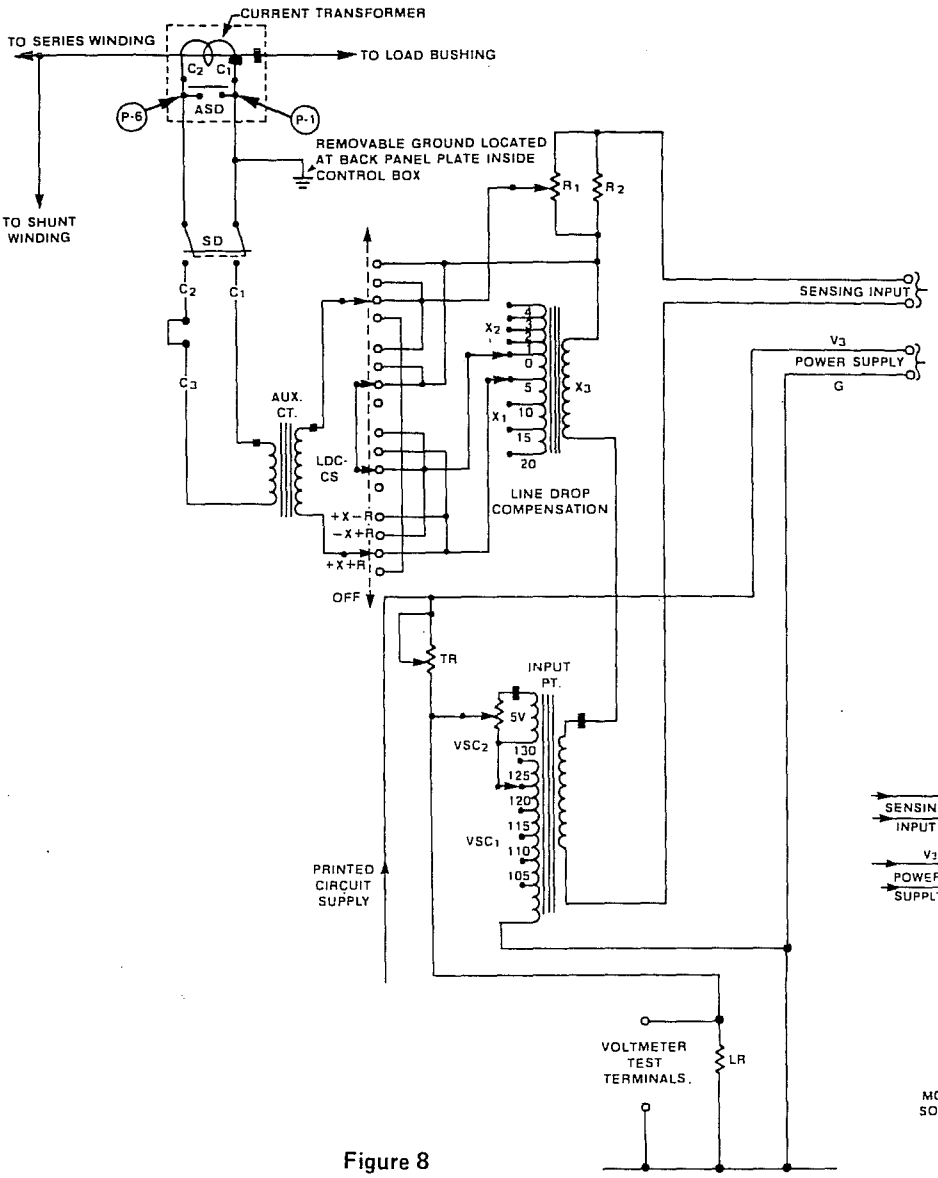

Figure 8

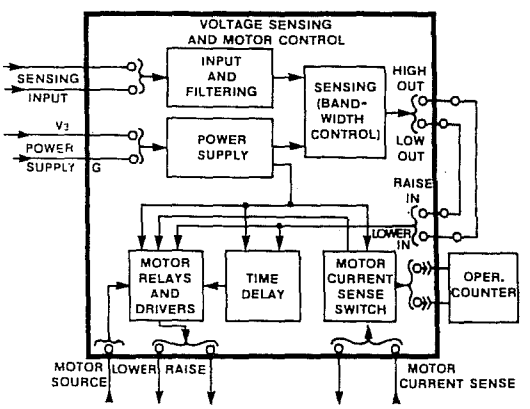

Figure 9

BIL), and the other tap provides the proper current for the operation of direct drive tap changers, 660C and 770B (rated 334 amps and 668 amps and 150 kv BIL). Thus, the control is universally applicable on direct and spring drive tap changers.

VOLTAGE DIVIDER

The voltage divider circuit, including current transformers, shorting device, auxiliary CT, LDC CONTROL SWITCH, TEST RHEOSTAT, INPUT PT, and LINE-DROP COMPENSATION REACTANCE and RESISTANCE are illustrated in Figure 8.

From the two amp fuse, the potential supply is fed to both the VOLTAGE SETTING control, VSC1 and VSC2, through the TEST RHEOSTAT, TR, and to the power supply of the printed circuit board, V3G. The VOLTAGE CONTROL, VSC1, consists of a potentiometer which provides the coarse adjustment and switch VSC2, which selects fine adjustments on the input potential transformer. This is in series with the LINE-DROP COMPENSATION RESISTANCE and REACTANCE and is then fed to the sensing input on the printed circuit board.

NOTE: The VOLTMETER terminals monitor a voltage proportional to the sensing input.

Current from the current transformer that is mounted inside the regulator tank is fed through a visible shorting disconnect on the rear panel of the control to an auxiliary CT through the polarity switch of the line-drop compensator, shown in the plus X/plus R position, and then to the reactance and resistance selectors of the line-drop compensator. By means of this circuit, the load current affects the resistance and reactance of the voltage input to the printed circuit board.

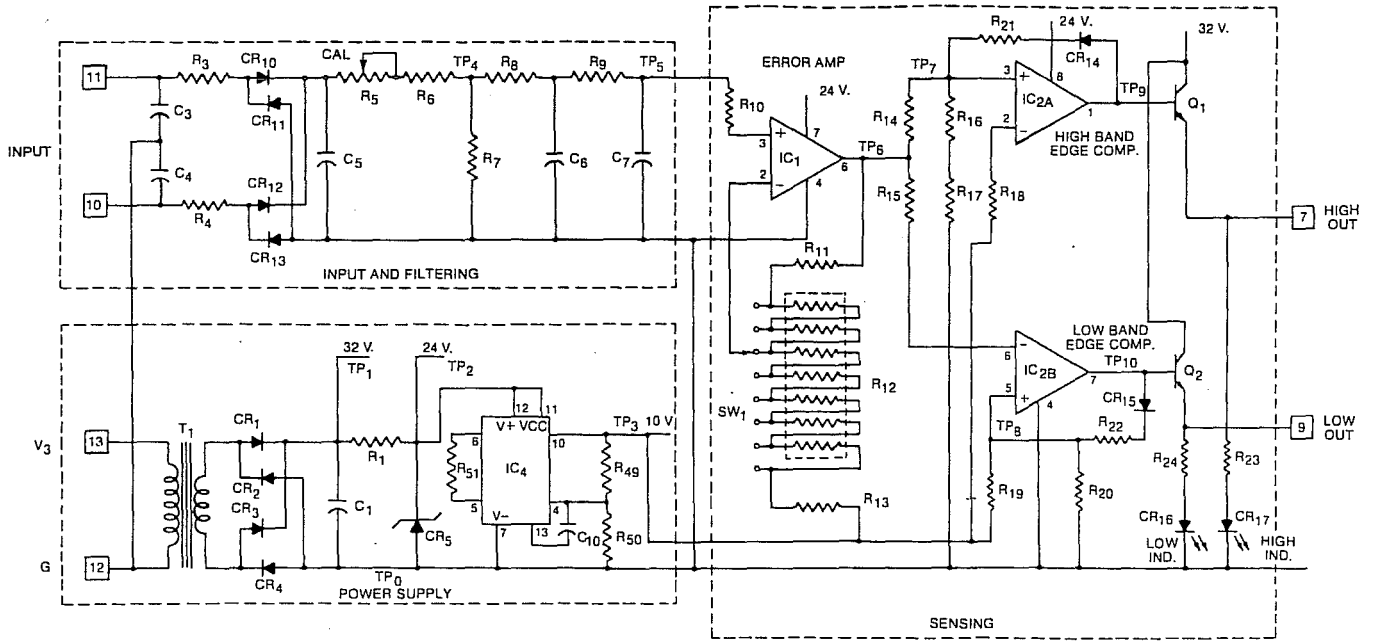

Figure 10

The design of the input potential transformer provides a compensating effect for changes in diode characteristics on the printed circuit board. This feature enhances stability when a wide swing of ambient temperature occurs. The control provides a maximum 1/4 volt change from -40C to 70C.

The use of precious-metal contacts in key components such as potentiometers and control switches provides additional stability over a wide temperature range and increases service life.

PRINTED CIRCUIT LOGIC

Figure 9 represents the printed circuit board as a logic diagram. The power supply provides power for all sections of the printed circuit. The input and filtering section receives its input from the voltage divider section of the circuit. Its purpose is to provide a significant level of harmonic rejection and increase the accuracy of the control. Because of the significant level of rejection of the third harmonic and wide range of temperature stability, the control is more accurate than most voltmeters that are used to maintain it. From the input and filtering section, the sensing voltage is fed to the sensing section of the control. The output of the sensing section of the control is interrupted with terminals. The reason for this interruption is to provide terminals for the addition of such accessories as reverse power flow or a voltage limiter.

The sensing voltage is then fed to the motor and relay driver section and the time delay section of the circuit. The presence of the output from the sensing circuit would initiate motor relay operation which would also initiate tap changer operation, except that the time delay circuitry inhibits the operation of this circuit. After the time delay circuit has timed out, the motor relay and driver portion of

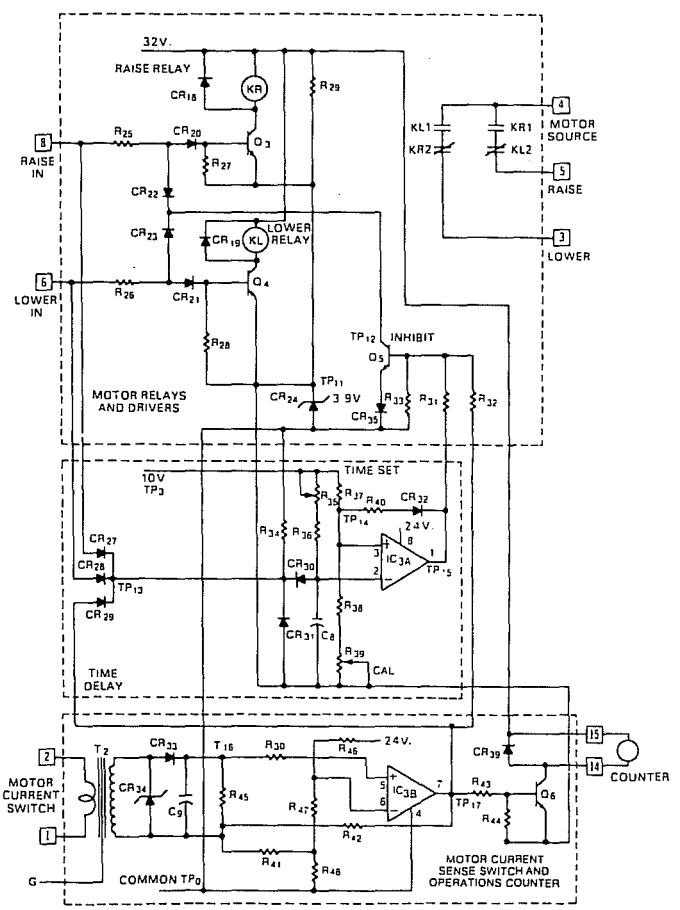

Figure 11

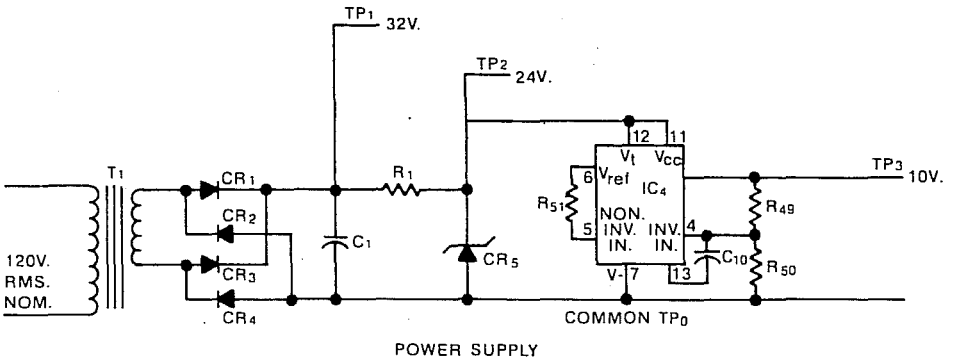

Figure 12

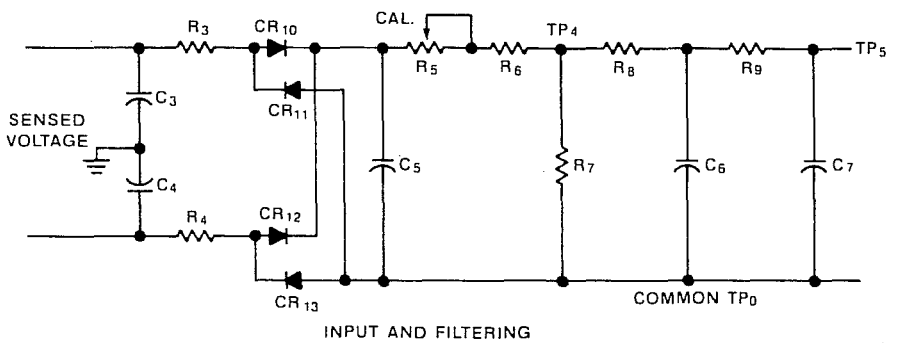

Figure 13

the circuit is then free to initiate a tap changer operation. Once the motor has begun to turn, which operates the holding switch, the supply for the holding switch circuit is then fed through the motor current sensing portion of the switch. When motor current is present, this inhibits the operation of the motor relays and drivers, so that the relays are open. At this point the tap changer is energized independently and does not need power from the motor relays.

When the motor completes its switching cycle and opens the holding switch, the continued presence of a sensing circuit output will cause another operation of the motor relays initiating another tap change without an intervening time delay. The time delay will reset only when the sensing output disappears.

PRINTED CIRCUIT BOARD (PCB)

Figures 10 and 11 illustrate the printed circuit board. In a process similar to the analysis of the system operation, the major segments of the printed circuit board will be examined.

POWER SUPPLY

Figure 12 illustrates the power supply. A 120 volt a-c supply is fed from the two amp fuse on the panel through transformer T1, which is mounted on the printed circuit board, and then back to ground. The secondary of transformer T1 feeds a full wave rectifier consisting of CR1, CR2, CR3, CR4, and capacitor C1. The direct current supply, TP1, at 32 volts, is fed to the motor relays. The bus of the power supply is fed through a series resistor, R1, and shunt connected Zenner diode, CR5, to obtain a direct current supply, TP2, of 24 volts. Direct current supply, TP2, feeds the operational amplifiers in the sensing, time delay, and motor current sensing portions of the printed circuit. From this point in the power supply, an active integrated circuit IC4, is used to obtain a direct current supply, TP3, of 10 volts. This supply is fed into the time delay and sensing portions of the printed circuit.

INPUT AND FILTERING

Figure 13 illustrates the sensing input and filtering portion of the printed circuit. An a-c supply from the two amp fuse is fed into the input potential transformer and voltage level adjustment, which is in series with the line-drop compensator circuitry, to the input and filtering circuit on the printed circuit board. The a-c supply is fed into a shunt capacitance, C3 and C4, for added protection against surges and through series resistors, R3 and R4, into the full wave rectifiers CR10, CR11, CR12, and CR13 and capacitor C5 to obtain a d-c voltage. The coordination of the design of the input potential transformer and the diode bridge in this circuit segment provides compensation that allows a maximum of a 1/4 volt shift from -40C to 70C. This d-c voltage is also fed through the one-step calibrating resistor, R5. From the calibrating resistor through the additional series and shunt resistors and shunt capacitors R6, R7, R8, R9, C6, and C7, the sensing input is fed to the sensing circuit. The resistors and

capacitors in the input and filter section of the printed circuit achieve a significant level of harmonic rejection and reduction of the ripple factor.

SENSING

Figure 14 illustrates the sensing circuit. The filtered and rectified input is fed into error amplifier IC1 through resistor R10. A reference voltage of 10 volts from the power supply at TP3 is fed through the bandwidth adjustment SW1 and resistor R12 to error amplifier IC1. The bandwidth adjustment is in finite steps rather than a potentiometer type. This allows for a precise preselection of each resistive component in R12. Because precise components are used, no calibration at this point is required.

The bandwidth setting adjusts the gain of error amplifier IC1. Output terminal 6 of IC1 is fed simultaneously to terminal 3 of the high band edge comparator, IC2A, and to terminal 6 of the low band edge comparator, IC2B through resistors R14 and R15. Reference voltage from TP3 is also provided to terminals 2 and 5, respectively of IC2A and IC2B through R18 and R19. If the output of the error amplifier causes terminal 3 of the high band edge comparator, IC2A, to swing positive with respect to terminal 2, this will cause terminal 1 to produce a signal forcing transistor Q1 to conduct. A feedback circuit consisting of resistor R21 and diode CR14, insures a positive operation of the comparator once the proper voltage level at terminal 3 is achieved. In a similar manner, terminal 6 of the low band edge comparator IC2B swings negative with respect to terminal 5 when output terminal 6 of the amplifier swings negative. This turns on transistor Q2. Band edge indication is accomplished by light emitting diodes on the output sides of Q1 and Q2.

MOTOR RELAYS

Both the time delay and motor relay portions of the printed circuit, Figure 15, receive output from the sensing portion of the circuit. Terminals are provided to intercept the sensing output for such accessories as reverse power flow and a voltage limiter.

Relay coil power is provided from the 32 volt bus of the power supply. Each relay coil, KR and KL, is connected through transistors Q3 and Q4, respectively, to a common ground bus through Zenner diode CR24.

The presence of a signal on the base of transistor Q5 will cause it to conduct and lower the voltage at the input of transistors Q3 and Q4, resistor R25, diode CR21, resistor R26, and diode CR22. An absence of a signal on the base of transistor Q5 impresses the input voltage from this sensing circuit on either resistor R25 and diode CR22 or resistor R26 and diode CR23, which will energize the proper relay coil, KR or KL. The base of transistor Q5 is controlled by the time delay and motor current portions of the printed circuit.

The cam-operated holding switch on the tap changer interrupts the load current. The raise and lower relays have one normally open contact and one normally closed contact. In the raise circuit, a normally open contact of the raise relay KR1 is connected in series with the normally closed contact from the lower relay KL2. In the unlikely event that a control circuit malfunction would occur, causing simultaneous raise and lower signals, neither the raise nor the lower relay would operate the tap changer.

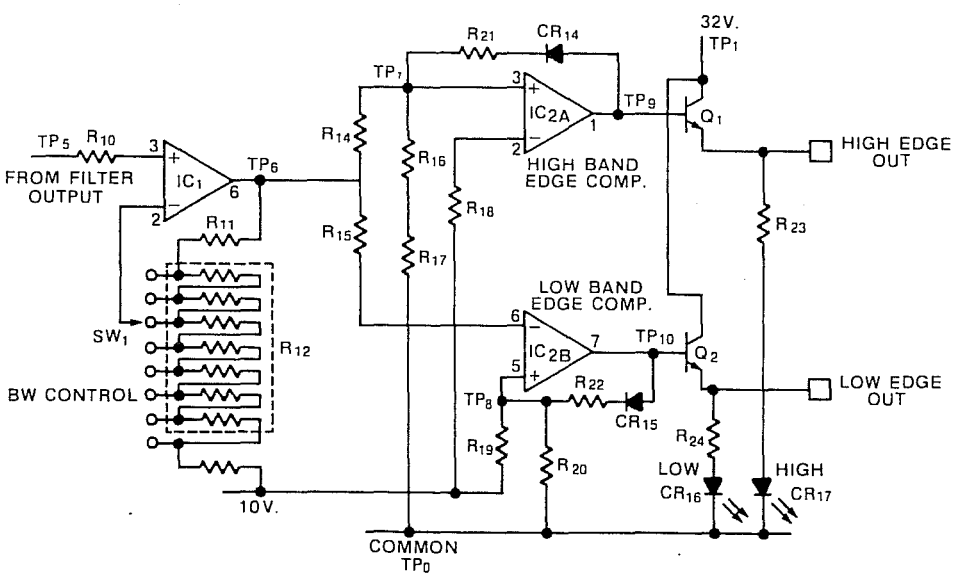

SENSING

Figure 14

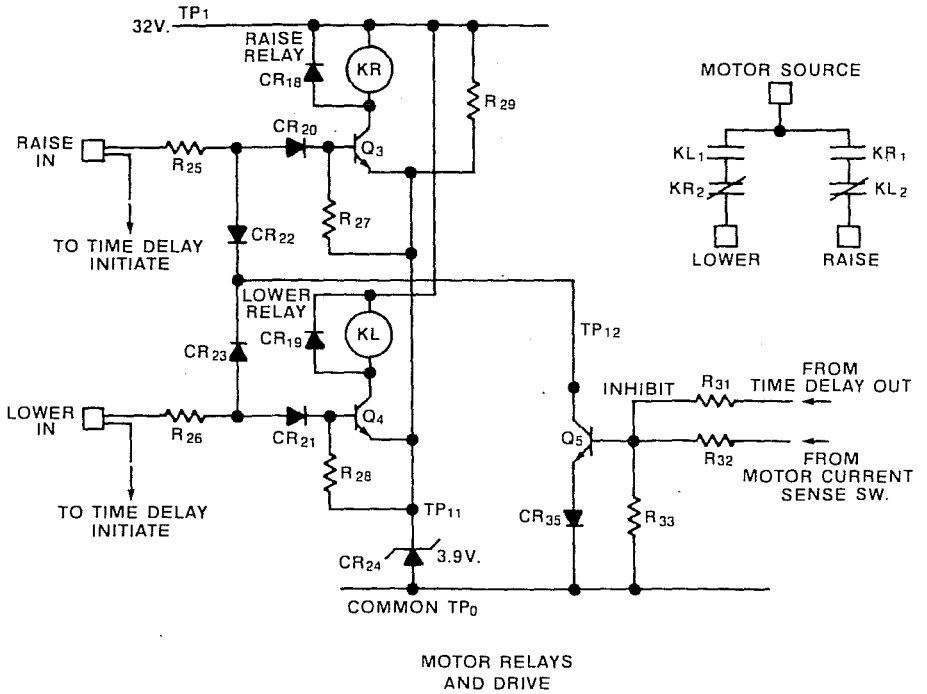

Figure 15

TIME DELAY

With the absence of a raise signal, a lower signal, or a signal from the motor current portion of the printed circuit, Figure 16, the time delay circuit is supplied from the 10 volt TP3 supply. Capacitor C8 is initially uncharged because of diodes CR30 and CR31. Upon receipt of a signal from either the raise or lower output of the sensing circuit, the capacitor C8 can be charged through resistors R35 and R36. Resistor R35 is the time delay adjustment. Charging capacitor C8 raises the voltage on terminal 2 of the operational amplifier, IC3, until it approaches the voltage at terminal 3 turning off the output at terminal 1. This removes the signal from transistor Q5 in the motor relay and driver portion of the printed circuit. After the appropriate time delay, the circuit will permit either the raise or lower relay to operate the tap changer.

A signal at CR29 from the motor current sensing portion of the circuit, or continued presence of a raise or lower signal at CR27 or CR28 will inhibit the reset of the time delay. Resistor R39 provides calibration of time delay.

MOTOR CURRENT SENSING

When a signal from the sensing portion of the motor current circuit, Figure 17, causes the time delay portion to time out, a tap changer operation is initiated from the motor relay and driver portion of the printed circuit. The motor begins to turn and the cam-operated holding switch on the tap changer closes. The tap changer is energized independently of the manual or automatic control switch functions from the motor supply so that no interruption of power to the motor can occur. Upon completion of a tap change, the cam disengages the holding switch. While engaged, the motor current is fed through a transformer T2 on the printed circuit. Transformer T2 is the input to the motor current sensing portion of the printed circuit.

Across the secondary of transformer T2 is a Zenner diode CR34. When motor current is present, Zenner CR34 limits the output voltage of transformer T2. Motor current causes terminal 5 of operational amplifier, IC3B, to swing positive relative to terminal 6. Presence of motor current causes an output signal at terminal 7. The output signal is fed to Q5 in the motor relay portion of the circuit which causes either the raise or lower relay, KR or KL, to open prior to completion of the tap change, removing the motor load duty from these relays. In addition, the output is fed to the time delay circuit input to inhibit the time delay reset during completion of the tap change.

When the holding switch opens, motor current ceases and the output of T2 is removed. Capacitor C9 discharges through R45 achieving a short time delay before the output of IC3B disappears. The output of terminal 7 of IC3B initiates operation of the operations counter.

CALIBRATION CHECK

McGraw-Edison regulator controls are factory calibrated in accordance with procedures described in this bulletin. The optimum calibration is achieved by using the instrumentation and following the procedures suggested herein. An indication of correct calibration can be obtained by using a multi-meter of the type commonly in use in our industry. Most of these meters respond to the average value, rather than the RMS value that our control does; in addition, harmonic content of the external source being applied for the calibration check can also affect the accuracy of the reading. If a multimeter is employed rather than a true RMS reading meter as specified herein, only indication of

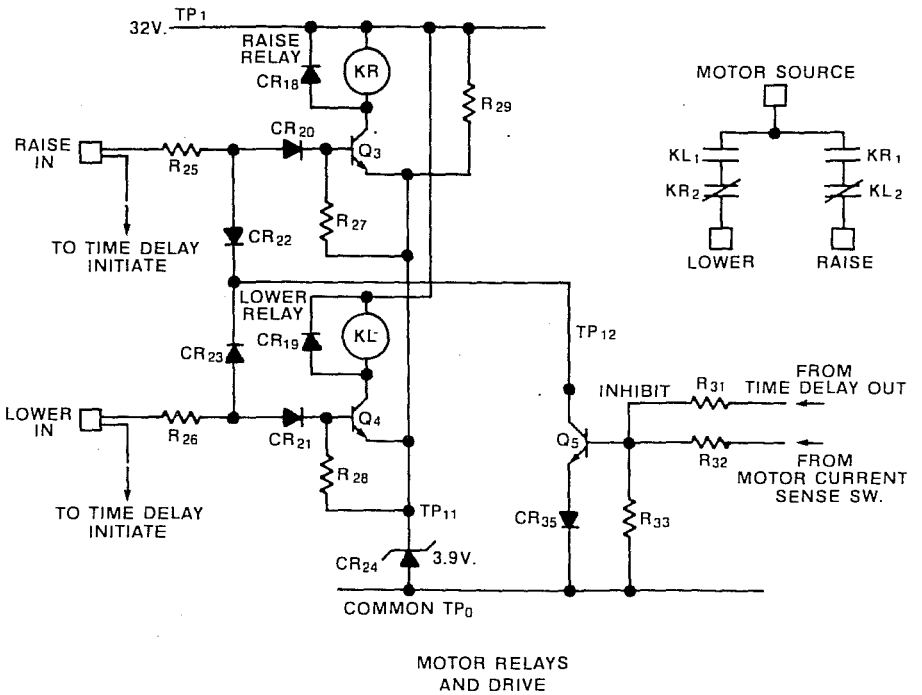

Figure 15

TIME DELAY

With the absence of a raise signal, a lower signal, or a signal from the motor current portion of the printed circuit, Figure 16, the time delay circuit is supplied from the 10 volt TP3 supply. Capacitor C8 is initially uncharged because of diodes CR30 and CR31. Upon receipt of a signal from either the raise or lower output of the sensing circuit, the capacitor C8 can be charged through resistors R35 and R36. Resistor R35 is the time delay adjustment. Charging capacitor C8 raises the voltage on terminal 2 of the operational amplifier, IC3, until it approaches the voltage at terminal 3 turning off the output at terminal 1. This removes the signal from transistor Q5 in the motor relay and driver portion of the printed circuit. After the appropriate time delay, the circuit will permit either the raise or lower relay to operate the tap changer.

A signal at CR29 from the motor current sensing portion of the circuit, or continued presence of a raise or lower signal at CR27 or CR28 will inhibit the reset of the time delay. Resistor R39 provides calibration of time delay.

MOTOR CURRENT SENSING

When a signal from the sensing portion of the motor current circuit, Figure 17, causes the time delay portion to time out, a tap changer operation is initiated from the motor relay and driver portion of the printed circuit. The motor begins to turn and the cam-operated holding switch on the tap changer closes. The tap changer is energized independently of the manual or automatic control switch functions from the motor supply so that no interruption of power to the motor can occur. Upon completion of a tap change, the cam disengages the holding switch. While engaged, the motor current is fed through a transformer T2 on the printed circuit. Transformer T2 is the input to the motor current sensing portion of the printed circuit.

Across the secondary of transformer T2 is a Zenner diode CR34. When motor current is present, Zenner CR34 limits the output voltage of transformer T2. Motor current causes terminal 5 of operational amplifier, IC3B, to swing positive relative to terminal 6. Presence of motor current causes an output signal at terminal 7. The output signal is fed to Q5 in the motor relay portion of the circuit which causes either the raise or lower relay, KR or KL, to open prior to completion of the tap change, removing the motor load duty from these relays. In addition, the output is fed to the time delay circuit input to inhibit the time delay reset during completion of the tap change.

When the holding switch opens, motor current ceases and the output of T2 is removed. Capacitor C9 discharges through R45 achieving a short time delay before the output of IC3B disappears. The output of terminal 7 of IC3B initiates operation of the operations counter.

CALIBRATION CHECK

McGraw-Edison regulator controls are factory calibrated in accordance with procedures described in this bulletin. The optimum calibration is achieved by using the instrumentation and following the procedures suggested herein. An indication of correct calibration can be obtained by using a multi-meter of the type commonly in use in our industry. Most of these meters respond to the average value, rather than the RMS value that our control does; in addition, harmonic content of the external source being applied for the calibration check can also affect the accuracy of the reading. If a multimeter is employed rather than a true RMS reading meter as specified herein, only indication of

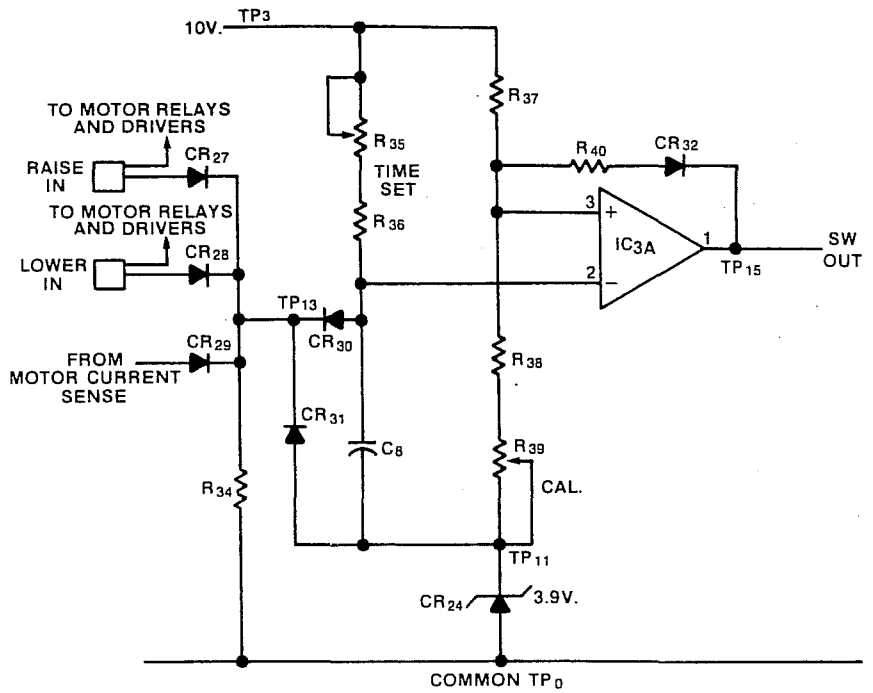

TIME DELAY

Figure 16

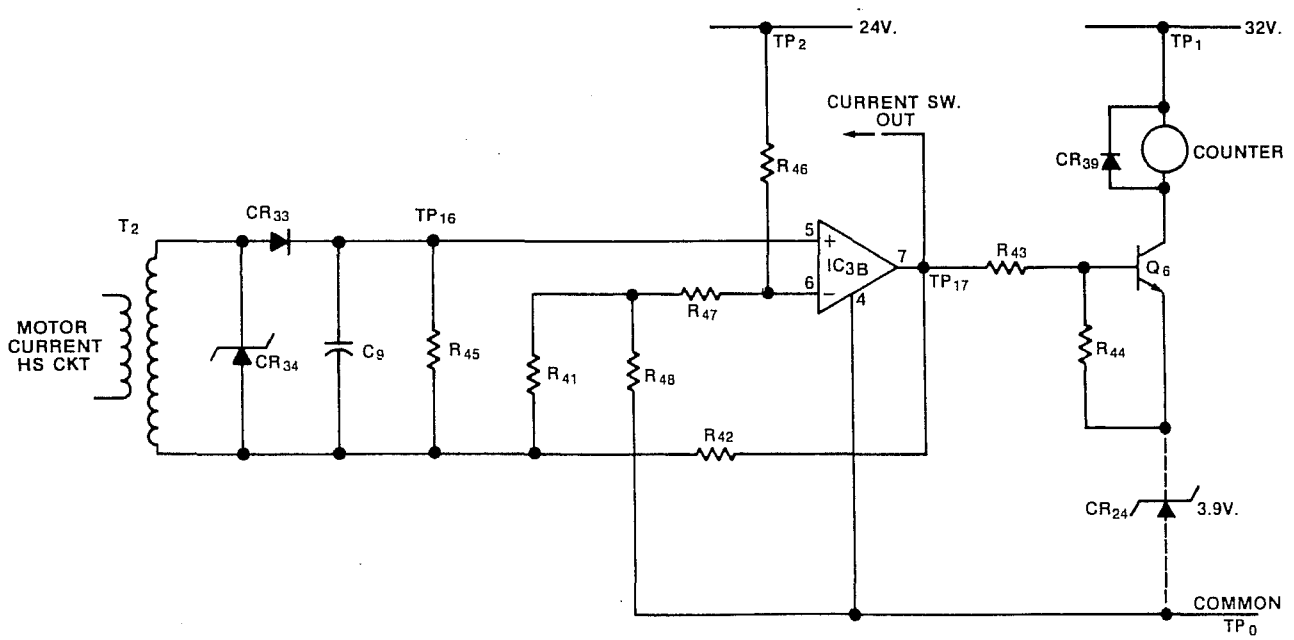

MOTOR CURRENT SENSE SW. AND OPERATIONS COUNTER

Figure 17

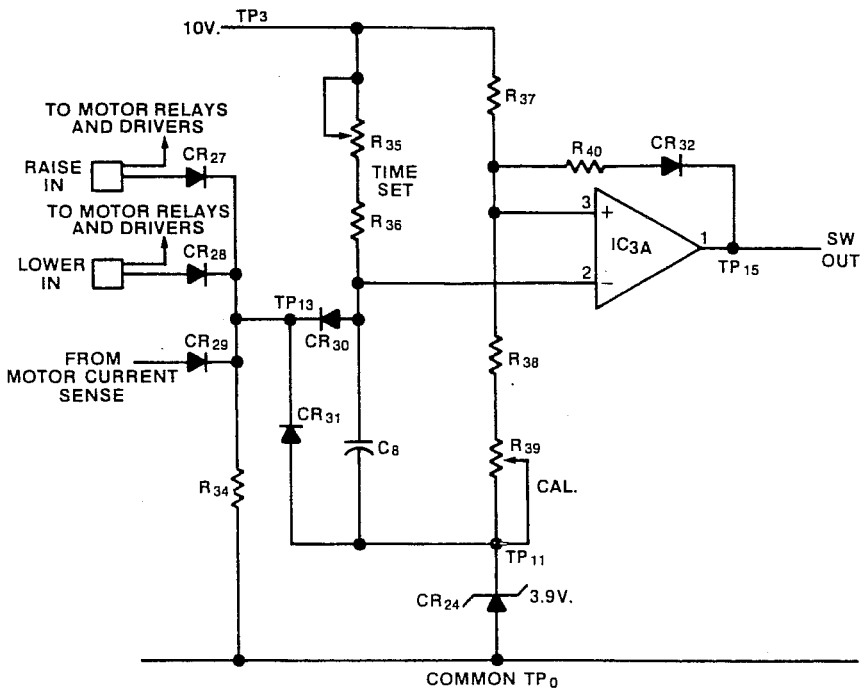

TIME DELAY

Figure 16

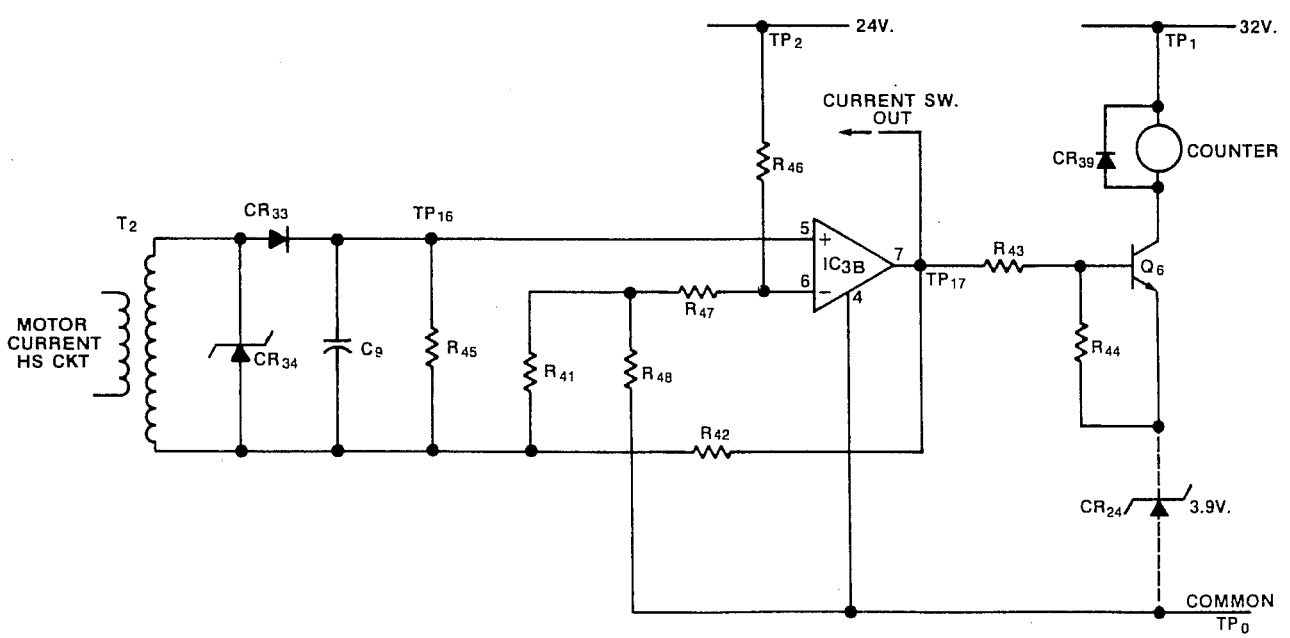

MOTOR CURRENT SENSE SW. AND OPERATIONS COUNTER

Figure 17

C. Set the control to 75 seconds.

D. Set the variable input voltage to 120 volts and hold for 10 seconds.

E. Quickly change the input voltage a little above or below the band to initiate the time delay.

F. Time until the relay is heard to close.

G. If necessary, adjust timing by adjusting R39 (calibrate time).

H. Check other time delay values for reasonable tracking.

TROUBLESHOOTING COMPLETE REGULATOR IN SERVICE

When service personnel arrive at what appears to be a malfunctioning regulator, it is advisable to examine the power connections. For example, verify that the source lead is connected to the source bushing, that the load lead is connected to the load bushing, and that the source-load lead is connected to the source-load bushing. Check other potential problems such as an open ground connection.

After the external power connections have been checked, check the V1 and V2 voltage disconnects and the current/shorting C1/C2 disconnect on the rear panel. Close the disconnects, if open. Check for voltage between V4 and G on RCT-1. This is the sensing circuit ratio transformer on the rear panel which is shown on Figure 18. If this voltage is more than ten percent above or below the programmed voltage level setting of VSC1 and VSC2, then the source is beyond the range of the regulator. An absence of voltage would indicate a potential wiring problem such as an open somewhere in the potential supply provided that disconnects V1 and V2 are closed. A voltage check, at terminal board TB1, between V1 and G and V2 and G, will verify the presence of voltage. An absence of voltage here will indicate problems inside the tank or control cable, if power exists at the regulator terminals.

If the potential supply between V4 and G on RCT-1 is adequate, remove the power and panel fuse from the control and check for continuity across each fuse. Replace fuses. Spares are initially included with the control.

If, after the above checks have been made and the problem is not external to the regulator, follow the procedure outlined below to complete the analysis of the problem.

At this point, further investigation may require the reconnection of certain leads within the control for test purposes. While making connection changes, the potential disconnects for V1 and V2 and the shorting disconnect for C1/C2 should always be opened. This provides a visible voltage disconnect and a current transformer secondary shorting device.

I. **Nature of Trouble**: The regulator will not operate manually or automatically.

Diagnosing Trouble: Make the following check to determine if the trouble is in the control or inside the tank. If the current relay (CR), Figure 5, is closed with the control switch in an OFF position, the tap changer is stalled between positions with the holding switch making contact. If the regulator utilizes a direct drive tap changer, it may be stalled with the geneva crank arm fully engaged in the geneva gear and unable to pull out. If the regulator utilizes a spring drive tap changer, the spool and the actuator engagement pin may be jammed together. If either of these conditions exist, it may be possible to free the tap changer by following the procedure outlined below:

1. Open the V1 and V2 disconnect switches that are located on the back panel of the control, removing power from the control.
2. Disconnect the orange control cable lead from the (HS) terminal on the top terminal board (TB1) that is located on the back panel of the control, thus removing the power from the tap changer holding switch.
3. Close the V1 and V2 disconnect switches restoring power to the control.
4. Rapidly rotate the CONTROL SWITCH between the OFF and RAISE positions. If the tap changer frees itself, stop on a tap position and go to step 5.

   If the tap changer did not free itself in step 4, rapidly rotate the CONTROL SWITCH between the OFF and LOWER positions. If the tap changer frees itself, stop it on a tap position and go to step 5.
5. Open the V1 and V2 disconnect switches removing power from the control.
6. Reconnect the orange lead to the (HS) terminal restoring power to the holding switch.
7. Close the V1 and V2 disconnect switches, restoring power to the control.
8. Using the CONTROL SWITCH, run the tap changer from full raise to full lower several times to insure its continued operation.

Experience has shown that while the above procedure may free the mechanism, the motor may have sustained surge damage or a random malfunction in the mechanism might still exist. The regulator should be removed from service to allow a thorough inspection of the mechanism.

If the tap changer did not free itself in the above steps, proceed as follows:

1. Set the CONTROL SWITCH on RAISE.
2. Measure the voltage between terminals R and G on terminal board (TB1). The voltage reading should be approximately 115 volts ac.
3. Set the CONTROL SWITCH on LOWER.
4. Measure the voltage between terminals L and G on terminal board (TB1). The voltage reading should be approximately 115 volts ac.
5. If correct voltage readings are obtained in steps 2 and 4 above, the trouble is inside the regulator tank.
6. If there is no voltage measurement in either step 2 or 4 above, make a corresponding measurement (R to G and L to G) on the lower terminal board (TB2).

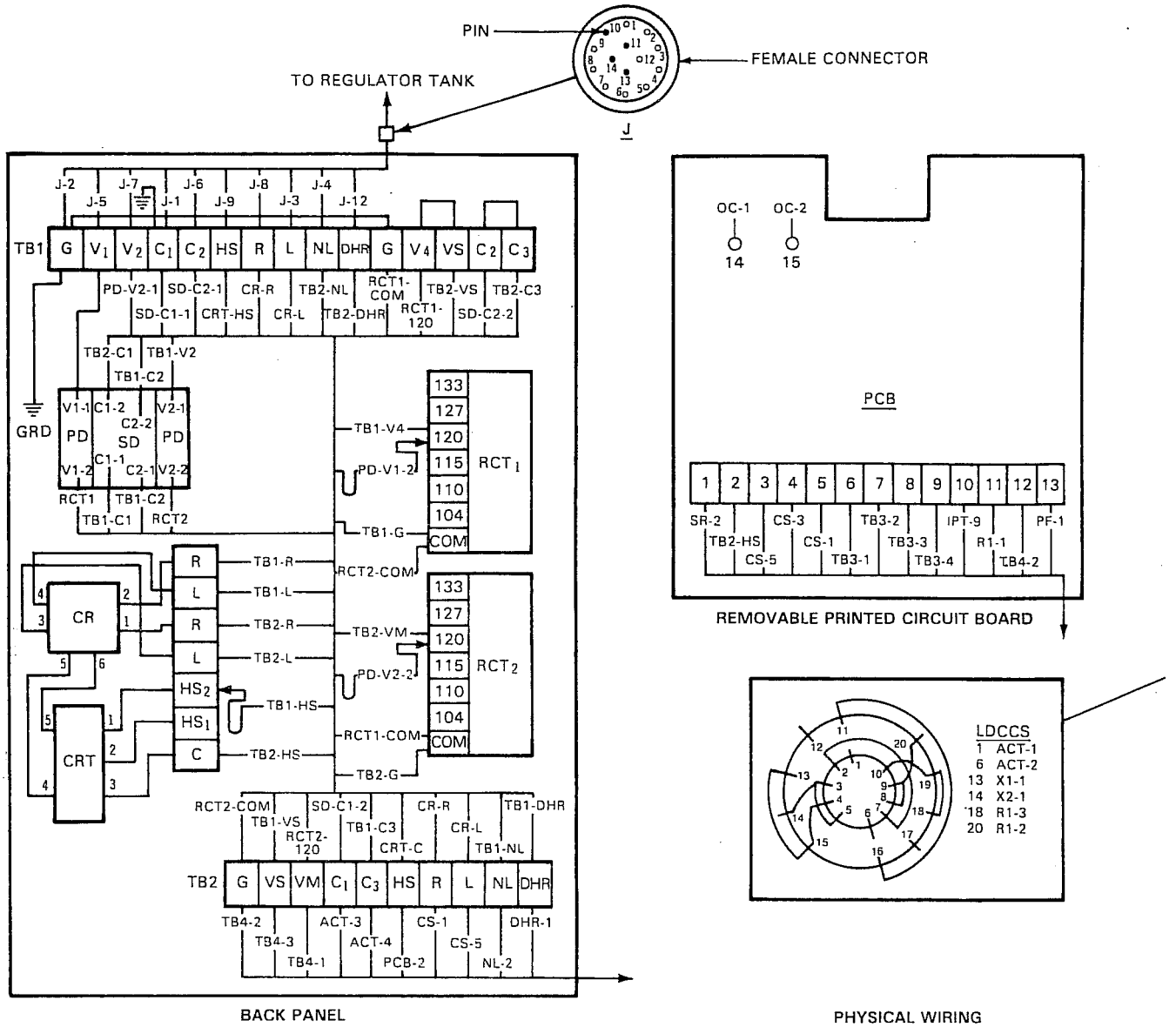

- A.C.T. – Auxiliary Current Transformer
- C.R. – Current Relay
- C.R.T. – Current Relay Transformer
- C.S. – Control Switch
- D.H.R. – Drag Hand Reset
- E.S.T. – External Source Terminals
- I.P.T. – Input Potential Transformer
- J/P – Connector Between Control and Tank (J = Jack, P = Plug)
- L.D.C.C.S. – Line Drop Compensation Control Switch
- L.R. – Loading Resistor
- M.F. – Motor Fuse
- M.O.V. – Metal Oxide Varistor
- N.L. – Neutral Light
- O.C. – Operations Counter
- P.C.B. – Printed Circuit Board
- P.D. – Potential Opening Device
- P.F. – Panel Fuse
- P.S. – Power Switch
- R1 – Line Drop Compensating Resistance Setting
- R2 – Trim Resistor
- $R.C.T_1$ – Ratio Correction Transformer for Sensing Circuit
- $R.C.T_2$ – Ratio Correction Transformer for Motor Circuit
- S.D. – Current Shorting Device
- S.R. – Series Resistor
- T.B. – Control Terminal Board
- T.R. – Test Rheostat
- $V.S.C_1$ – Coarse Voltage Setting Control
- $V.S.C_2$ – Fine Voltage Setting Control
- V.T.T. – Voltage Test Terminals
- X_1 – Line Drop Compensating Reactance Coarse Setting
- X_2 – Line Drop Compensating Reactance Fine Setting
- X_3 – Line Drop Compensating Reactor

NOTES:

1. The coded identification beside each numbered terminal identifies the origin of the lead by component and terminal.
2. Place lead TB1-HS on terminal CRT-HS1 for direct drive units and on terminal CRT-HS2 for spring drive units.
3. The plug and jack of the connector between the control and tank have corresponding numbers.

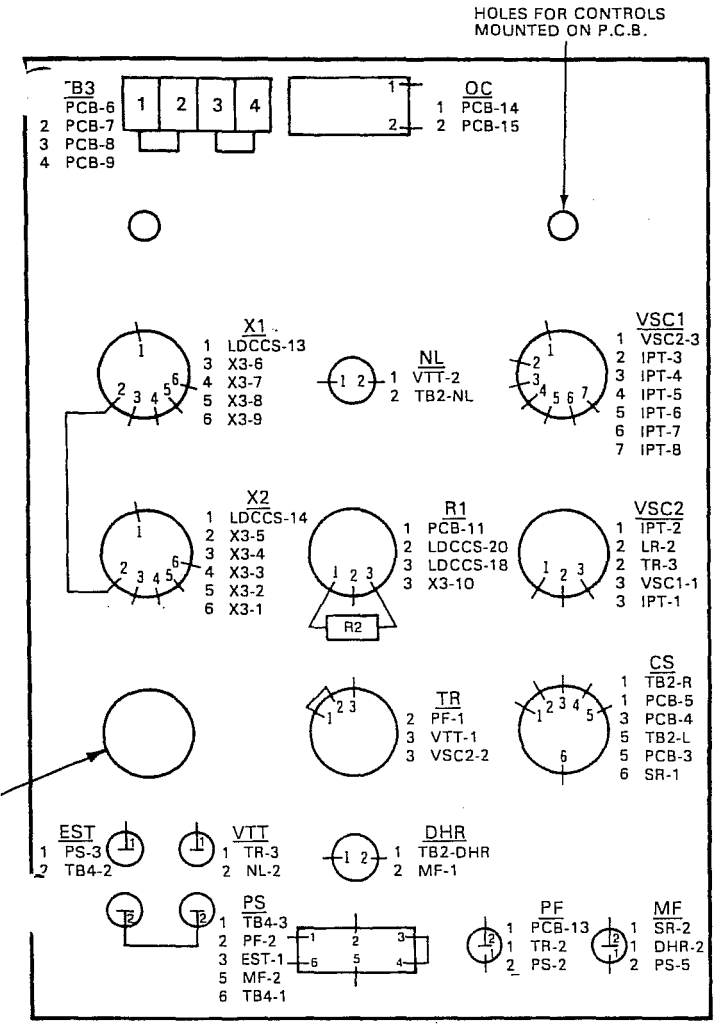

FRONT PANEL (VIEWED FROM REAR)

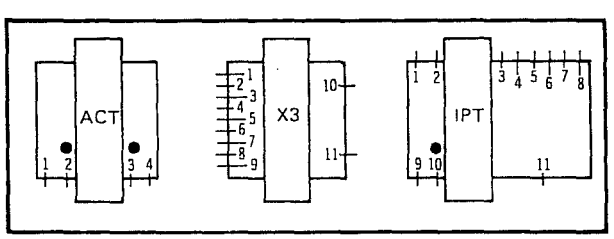

TOP OF SHELF

ACT		X3		IPT	
1	LDCCS-1	1	X1-6	1	VSC2-3
2	LDCCS-6	2	X1-5	2	VSC2-1
3	TB2-C1	3	X1-4	3	VSC1-2
4	TB2-C3	4	X1-3	4	VSC1-3
		5	X2-2	5	VSC1-4
		6	X2-3	6	VSC1-5
		7	X2-4	7	VSC1-6
		8	X2-5	8	VSC1-7
		9	X2-6	9	PCB-10
		10	R1-3	10	X3-11
		11	IPT-10	11	TB4-2

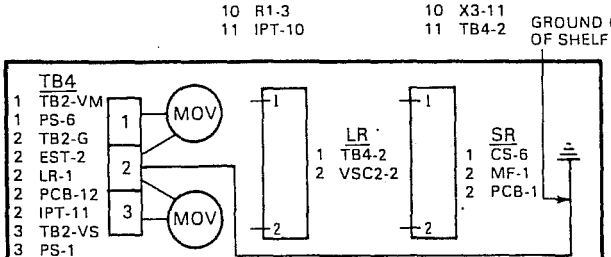

BOTTOM OF SHELF

Figure 18
Physical wiring.

COLOR CODING CHART

TB1-G to J-2	White
TB1-V1 to J-5	Black
TB1-V2 to J-7	White/Black
TB1-C1 to J-1	Red
TB1-C2 to J-6	Green
TB1-HS to J-9	Orange
TB1-R to J-8	Blue
TB1-L to J-3	Green/Black
TB1-NL to J-4	Red/Black
TB1-DRH to J-12	Orange/Black
TB1-V1 to PD-V1-1	Black
TB1-V2 to PD-V2-1	White/Black
TB1-C1 to SD-C1-1	Red
TB1-C2 to SD-C2-1	Green
TB1-HS to CRT-HS	Orange
TB1-R to CR-R	Blue
TB1-L to CR-L	White/Green
TB1-NL to TB2-NL	White/Red
TB1-DHR to TB2-DHR	White/Orange
TB1-G to RCT1-COM	White
TB1-V4 to RCT1-I20	Black
TB1-VS to TB2-VS	Black
TB1-C2 to SD-C2-2	Green
TB1-C3 to TB2-C3	Green
RCT1 to PD-V1-2	Black
RCT1-COM to RCT2-COM	White
RCT2 to PD-V2-2	White/Black
TB2-G to RCT2-COM	White
TB2-VM to RCT2-I20	White/Black
TB2-C1 to SD-C1-2	Red
TB2-HS to CRT-C	Orange
TB2-R to CR-R	Blue
TB2-L to CR-I	White/Green
TB2-G to TB4-2	White
TB2-VS to TB4-3	Black
TB2-VM to TB4-1	White/Black
TB2-C1 to ACT-3	Red
TB2-C3 to ACT-4	Green
TB2-HS to PCB-2	Orange
TB2-R to CS-1	Blue
TB2-L to CS-5	White/Green
TB2-NL to NL-2	White/Red
TB2-DHR to DHR-1	White/Orange
PCB-1 to SR-2	White/Black
PCB-3 to CS-5	White/Green
PCB-4 to CS-3	White/Blue
PCB-5 to CS-1	Blue
PCB-6 to TB3-1	White/Brown
PCB-7 to TB3-2	Brown
PCB-8 to TB3-3	White/Violet
PCB-9 to TB3-4	Violet
PCB-10 to IPT-9	Red
PCB-11 to R1-1	Red
PCB-12 to TB4-2	White
PCB-13 to PF-1	Black
PCB-14 to OC-1	Black
PCB-15 to OC-2	Black
X1-1 to LDCCS-13	Blue
X1-3 to X3-4	Green
X1-4 to X3-3	Blue
X1-5 to X3-2	Violet
X1-6 to X3-1	White
X2-1 to LDCCS-14	Brown
X2-2 to X3-5	Black
X2-3 to X3-6	Brown
X2-4 to X3-7	Red
X2-5 to X3-8	Orange
X2-6 to X3-9	Yellow
LDCCS-1 to ACT-1	Yellow
LDCCS-6 to ACT-2	Red
LDCCS-18 to R1-3	White/Blue
LDCCS-20 to R1-2	White/Brown
EST-1 to PS-3	Black
EST-2 to TB4-2	White
EST-2 to VTT-2	White
NL-1 to VTT-2	White
R1-3 to X3-10	White/Black
TR-2 to PF-1	Brown
TR-3 to VTT-1	White/Violet
TR-3 to VSC2-2	White/Violet
DHR-2 to MF-1	White/Brown
PS-1 to TB4-3	Black
PS-2 to PF-2	Black
PS-5 to MF-2	White/Black
PS-6 to TB4-1	White/Black
VSC1-1 to VSC2-3	Blue
VSC1-2 to IPT-3	Brown
VSC1-3 to IPT-4	Orange
VSC1-4 to IPT-5	Yellow
VSC1-5 to IPT-6	Green
VSC1-6 to IPT-7	Violet
VSC1-7 to IPT-8	White
VSC2-1 to IPT-2	Blue
VSC2-2 to LR-2	White/Violet
VSC2-2 to IPT-1	Gray
SR-1 to CS-6	White/Black
SR-2 to MF-1	White/Black
LR-1 to TB4-2	White
IPT-10 to X3-11	White/Red
IPT-11 to TB4-2	White
TB1-G to GRD	White
TB1-G to TB1-G	White
TB1-V4 to TB1-VS	Black
TB1-C2 to TB1-C3	Green
TB3-1 to TB3-2	Brown
TB3-3 to TB3-4	Violet
X1-2 to X2-2	Green

7. If the voltages measured in step 6 are approximately 115 volts ac, then the fault is most likely the loss of continuity through the (CR) relay contacts. This relay is located on the back control panel.

8. If steps 2, 4, and 6 do not provide voltage readings, measure the voltage between VM and G on terminal board (TB2). The reading should be approximately 120 volts ac.

9. If step 8 does not measure correctly, the trouble could be an open (SR) resistor, MOTOR fuse, POWER switch, or CONTROL switch.

10. Also, if step 8 does not yield a voltage measurement, check the voltage between V2 and G on upper terminal board (TB1).

    A. If approximately 120 volts ac is obtained at V2 to G, the V2 disconnect or the ratio correcting transformer is probably faulty.

    B. If a voltage reading is not obtained at V2 to G on terminal board (TB1), the trouble is in the control cable or in the regulator tank.

II. Nature of Trouble: The regulator will operate manually but not automatically.

Diagnosing Trouble:

1. Measure the voltage between terminals V1 and G on terminal board (TB1). The reading should be approximately 120 volts ac or the scaled value of ratio correction if it is used.

    A. The presence of voltage indicates that the trouble is in the control.

    B. The absence of voltage indicates that the trouble is in the cable or regulator tank.

2. With voltage present in 1A above, an additional voltage measurement from VS to G on lower terminal board (TB2) should further pinpoint the trouble.

    A. A measurement of approximately 120 volts ac at VS to G indicates that the problem is in the front panel main frame assembly.

    B. If there is no voltage present at VS to G, the trouble is in the V1 disconnect or ratio correcting transformer on the rear panel.

3. If 2A above indicates that the trouble is in the main frame, turn the TIME DELAY SECONDS control fully counterclockwise, and vary the input voltage as described under CALIBRATION CHECK.

    A. If the BAND LIMIT indicators do not function, the trouble could be with the PANEL fuse, POWER switch, or TEST RHEOSTAT.

    B. If the BAND LIMIT indicators do function properly, check the relays. They should close following "time-out". If the relays close, then the trouble could be in the relay contacts. An indication of contact problems is the switch running in one direction (raise or lower) and not the other.

4. If the trouble has not been located at this point, then replace or troubleshoot the printed circuit board.

III. Nature of Trouble: Regulator operates manually but runs to one end of the range when the control is set on automatic.

Diagnosing Trouble: The malfunction is probably in the main frame of the control. Use the troubleshooting instructions for the main frame and printed circuit board which follows. Refer to Figures 18 and 19 for the location of the components. Test points are also identified on the printed circuit board.

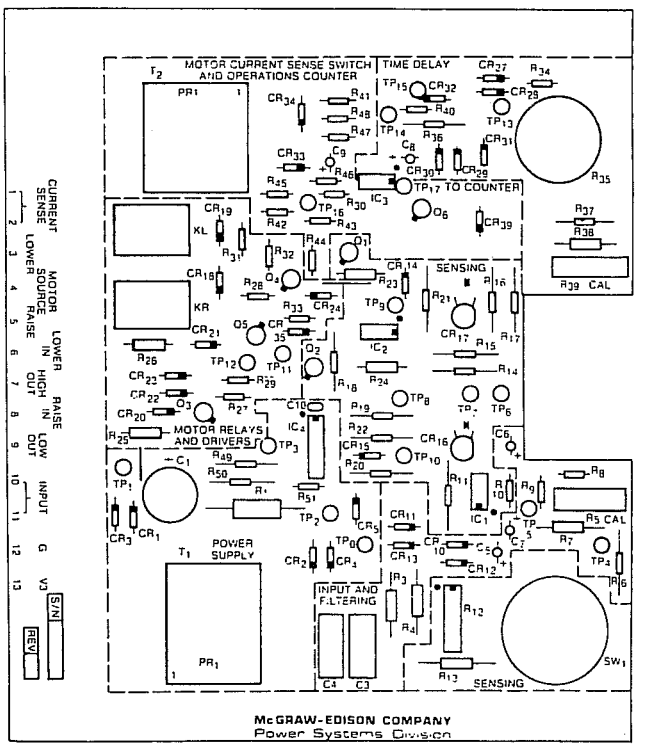

Figure 19

TROUBLESHOOTING MAIN FRAME AND ASSOCIATED COMPONENTS

In circuits where switches and/or rheostats are involved, they should be tested before such things as transformers and reactors. Trouble in rheostats is generally evidenced by sudden discontinuities in an observed measurement (e.g. voltage) as the control is rotated smoothly.

Except for the LINE-DROP COMPENSATION circuit, the panel components can be checked by using either an internal or an external voltage source. Fuses should be double checked first before other components are evaluated. Checks are made with approximately 120 volts, 60 hertz applied either internally from VS to G or to the EXTERNAL SOURCE terminals.

With a 1000 ohms per volt a-c voltmeter connected to the VOLTMETER test terminals, vary the TEST RHEOSTAT (TR) through its range. The minimum to maximum voltage read should cover slightly more than 4.5 volts. If this is not true, the TEST RHEOSTAT (TR) or resistor (LR) is at fault.

Connect the 1000 ohms per volt a-c voltmeter across terminals 10 and 11 (INPUT) of the printed circuit board terminal strip. The reading here will be in the vicinity of 58 volts when the VOLTAGE SETTING control value equals the 120 volts applied voltage. *This is not a calibration level measurement.* Turn the LDC CONTROL to OFF. With the fine VOLTAGE SETTING rheostat (VSC2) on zero (0), operate the coarse VOLTAGE SETTING switch (VSC1) from the 105 volt position through its steps to the 130 volt position. The voltmeter reading should drop about 2.5 volts for each step. If this is not true, either the switch (VSC1) or transformer (IPT) is probably at fault.

With the coarse VOLTAGE SETTING SWITCH (VSC1) on the 120 volt position, vary the fine VOLTAGE SETTING rheostat (VSC2) from zero (0) to the 4.5 volt position. The measured voltage should drop smoothly about 2.25 volts. The failure to conform indicates a faulty rheostat (VSC2) or transformer (IPT).

With 60 hertz, 120 volts still connected to the internal or external source, a quick check of the DRAG HAND RESET switch (DHR) and the NEUTRAL light (NL) may be made. Connect the a-c voltmeter from G to DHR on terminal strip TB2. Push the DRAG HAND RESET button and note a 115 volt to 125 volt reading on the meter. If there is no indication, the switch is probably defective.

Connect a jumper from VM to NL on terminal strip TB2. The NEUTRAL indicator should come on. If it doesn't the lamp or lamp holder is defective.

The LINE-DROP COMPENSATION components should be checked with the main frame removed from the enclosure at a test bench location. The printed circuit should be disconnected by dropping the fanning strip away from the printed circuit board terminal strip.

Switch the POWER switch to EXTERNAL. Connect a jumper from the EXTERNAL SOURCE terminal to ground. Apply and maintain a test current source of 0.2 amps from C1 to C3 on the fanning strip for terminal strip TB2. Connect a 1000 ohms per volt a-c voltmeter to the terminals marked INPUT on the fanning strip for the printed circuit board.

Switch the LDC CONTROL switch to +X+R. Set the coarse and fine REACTANCE VOLTS control to zero (0). Vary the RESISTANCE VOLTS control and measure voltage at major points across the dial.

The measured voltage at these points should be half the RESISTANCE VOLTS dial setting ± 3.5 percent. Erratic behavior indicates a defective RESISTANCE VOLTS control. A serious deviation from expected readings at all levels indicates a defective R2. R2 is selected to yield a resistance of 270 ohms ± 3.5 percent from terminal 1 to terminal 3 of the RESISTANCE VOLTS control (R1).

With the RESISTANCE VOLTS control set at 24 on the panel, switch the LDC CONTROL switch (LDCCS) from the +X+R setting through the other two positions (-X+R and +X-R). The voltage reading should be constant. Any change indicates a probable defective LDC CONTROL switch.

To check the coarse REACTANCE VOLTS control, set the RESISTANCE VOLTS control to zero (0). Switch the LDC CONTROL to +X+R and operate the coarse REACTANCE VOLTS control (X1) through all positions.

The voltage reading in each switch position should be half the dial setting. This reading cannot be taken as precise unless a current source, virtually free of high-order harmonics, is used. This is not normally available in a typical test setup. The unit is calibrated at the factory and any trouble should be indicated by a significant deviation from the values provided in this troubleshooting outline. In this case, a deviation indicates a defective REACTANCE VOLTS switch (X1) or reactor, X3.

With the coarse REACTANCE VOLTS switch set at 10, rotate the fine REACTANCE VOLTS control through all positions. The voltage reading at each position should be half the sum of 10 plus the respective fine REACTANCE VOLTS setting. A deviation indicates a defective fine REACTANCE VOLTS switch or reactor, X3.

With the coarse REACTANCE VOLTS switch (X1) set at 10 and the fine REACTANCE VOLTS switch at zero (0), again switch the LDC CONTROL switch through -X+R and +X-R. The reading should remain constant. A deviation indicates a defective LDC CONTROL switch.

If the results of all the previous line-drop compensation tests deviate significantly from the values provided in this outline, the LDC CONTROL switch on the auxiliary current transformer (ACT) are the most likely problem areas.

If all checks are satisfactory, the trouble is likely to be in the printed circuit board. Refer to the printed circuit board troubleshooting procedures which follow.

TROUBLESHOOTING PRINTED CIRCUIT BOARD

It is convenient to troubleshoot the PC board circuitry while it is mounted in the main frame, however, the board can also be checked after it is removed from the main frame. The board should be serviced in a shop on a service bench and not in the field.

PC board left in the main frame:

1. Turn the LINE-DROP COMPENSATION control to OFF.
2. Turn the POWER switch to EXTERNAL.
3. Set the VOLTAGE SETTING to 120 volts.
4. Set the BANDWIDTH VOLTS to 2 volts.
5. Set the TIME DELAY SECONDS to 15 seconds.
6. Disconnect the two jumpers on the four terminal strip at the top of the main frame – one from "High Out" to "Lower In", and the other from "Low Out" to "Raise In".
7. Apply a 60 hz, 120 volt nominal variable source to the EXTERNAL SOURCE terminals. Make sure that the source ground is connected to the panel ground.

Printed circuit board removed from the main frame:

1. Set the BANDWIDTH VOLTS control two positions clockwise from its extreme counterclockwise position.
2. Set the TIME DELAY SECONDS control approximately 30 degrees clockwise from its extreme counterclockwise position.
3. Connect a 120 volt supply to V2 and G (ground). Observe ground.
4. Connect one end of a 360 ohm resistor to either input terminal on the PC board.
5. Connect the other end of the 360 ohm resistor and the other PC board input terminal to a variable isolated 60 volt a-c, 60 hz supply.

The input voltage and the equivalent bandwidth on the printed circuit board are related to 60 volts and are, therefore, one-half the 120 volt level applied to the main frame.

Check No. 1

The following measurements can be made with a multimeter with an accuracy of two percent, having at least 5000 ohms per volt dc and 1000 ohms per volt ac. The input voltage will either be held in band or be varied from band edge to band edge.

With the input voltage set at nominal (in band), the following power supply voltages should be obtained between TP0 and the designated test points below.

Test Point	Volts (dc)
TP1	28 to 32
TP2	24 ± 10 percent
TP 3	10 ± 3 percent

Failure to Conform

Condition	Probable Fault
All voltages low. TP1 – TP2 much greater than 7 volts.	Shorted Zenner CR5. Shorted IC1, 2, 3, or 4.
All voltages low.	Defective C1.
TP1 – TP2 much less than 7 volts.	Defective diode CR1, 2,3,or 4. Possible defective T1.
TP1 and TP2 – OK.	Defective regulator.
TP3 – out of tolerance.	Defective IC4, R49, R50, R51.

If all the power supply voltages are correct, and the unit still does not function properly, take the following steps:

1. Connect the d-c voltmeter to HIGH-OUT and TP0. With the input voltage set at nominal (in band), the maximum reading should be 2 volts.
2. Increase the input voltage slowly until the output switches high. This point should be sharp and clearly defined. The reading should be at least 20 volts.
3. Connect the d-c voltmeter to LOW-OUT and TP0. Repeat the above while decreasing the input.

Condition	Probable Fault
Readings out of tolerance or no switching.	In input and filtering or sensing. Go to Check No. 2.
Readings within tolerance but motor relays did not close after delay in original condition.	In motor control and timing functions. Go to Check No. 5.
All functions OK but visual indicators do not follow.	Faulty R24, R23, CR16, or CR17.

Check No. 2 – Input and Filtering and Sensing

Connect the d-c meter to test points TP3 and TP6. By varying the input voltage it should be possible to vary this voltage from below a negative 1.88 volts to above a positive 1.88 volts.

At the balance point (TP3 to TP6 is 0) switch to a-c volts. This reading should be less than 30 millivolts.

Condition	Probable Fault
D-c swing is correct but a-c ripple is high.	Filters C5, C6, and C7.
D-c swing is not satisfactory.	IC1, or the resistors in the input section. Go to Check No. 3.
Conditions alright. Comparators don't switch.	Comparators. Go to Check No. 4.

Check No. 3.

D-c measurement TP3 to TP4.
Voltage should swing through zero as the input is varied.
D-c measurement TP3 to TP5.
Voltage should be zero when TP3 to TP4 is zero.
Note TP3 and TP6 swing from Check No. 2.

Condition	Probable Fault
TP4 does not swing through zero.	Check diodes CR10, CR11, CR12, and CR13. Check C6 and C7 capacitors for leakage. Check all resistors in filter.
TP4 does swing through zero, but TP5 zero is not coincident.	Leaky C6, C7, or IC1.
All swings are correct except TP6.	IC1. R11, R12, and R13.

Check No. 4

D-c measurement TP3 to TP8, 1.88 volts ±2%.
D-c measurement TP0 to TP9.
In band value – Maximum 2.5 volts.
High band value – Minimum 22 volts.

D-c measurement TP0 to TP10.
In band value – Maximum 2.5 volts.
Low band value – Minimum 22 volts.

Connect d-c meter TP3 to TP7.
Adjust the input until the meter reads zero.
Measure TP3 to TP6, 1.88 volts ±2%.

Condition	Probable Fault
TP3 to TP8 incorrect voltage.	R19, R20.
TP3 to TP8 correct. Low band comparator will not switch or TP10 voltage in error.	IC2.
Low band comparator switches but is "fuzzy".	CR15, R22.
TP6 to TP3 voltage measurement in error.	R14, R16, and R17.
TP3 to TP6 correct. High band comparator will not switch or TP9 voltage in error.	IC2.
High band comparator switches but is "fuzzy".	CR14, R21.
All measurements and responses correct.	Q1, Q2.

The remaining tests are for the motor control circuitry. It is not necessary to maintain a variable source at the board input terminals. 120 volts, 60 hz must be maintained at V3 to G. Certain d-c voltage measurements require a meter of at least 1 megohm input impedance. These measurements are so designated.

Check No. 5

D-c measurement TP17 to TP0, maximum 2.5 volts.
D-c measurement TP11 to TP0, 3.9 volts ± 10 percent.

Condition	Probable Fault
TP11 correct. TP17 high.	Go to Check No. 8.
TP17 correct. TP11 incorrect.	CR24, R29.
TP11 correct. TP17 correct.	Go to Check No. 6.

Check No. 6

Rotate the TIME DELAY SECONDS control to the extreme counterclockwise position (minimum delay).
Connect a d-c voltmeter from TP0 to TP13.
Connect one end of a 1000 ohm resistor to TP2 using an eight inch lead.
Apply the free end of the resistor to the RAISE IN terminal.
Note if the raise relay closes after a brief delay, read voltmeter.
Apply the free end of the resistor to the LOWER IN terminal.
Note if the lower relay closes after a brief delay, read voltmeter.

Condition	Probable Fault
Raise relay closes. Lower relay will not close. TP13 reads approximately 16.5 volts on RAISE IN and LOWER IN.	R26, CR21, Q4, CR19, KL.
Lower relay closes. Raise relay will not close. TP13 reads approximately 16.5 volts on RAISE IN LOWER IN.	R25, CR20, Q3, CR18, KR.
Raise relay will not close. TP13 reads approximately 16.5 volts on LOWER IN and 3 to 5 volts on RAISE IN.	CR27 open.
Lower relays will not close. TP13 reads approximately 16.5 volts on RAISE IN and 3 to 5 volts on LOWER IN.	CR28 open.
Neither relay will close. TP13 measures 4 to 6 volts on RAISE IN and LOWER IN.	CR31 or CR29 shorted.
Neither relay will close. TP13 measures approximately 16.5 volts on RAISE IN and LOWER IN.	Go to Check No. 7.
Both relays close on raise input. TP13 measures approximately 16.5 volts on RAISE IN and LOWER IN.	CR23 shorted.
Both relays close on lower input. TP13 measures approximately 16.5 volts on RAISE IN and LOWER IN.	CR22 shorted.
Raise relay will not open with no input.	R27 open. Q3 shorted.
Lower relay will not open with no input.	R28 open. Q4 shorted.
Relays close without delay.	Go to Check No. 7.

Voltage Regulating Apparatus

32-Step Regulator
Spring Drive Switch

SERIAL NUMBER

78 – year of manufacture.

Z – Factory location (Z – Zanesville, V – Visalia, N – Nacogdoches).

A – Month of manufacture (A – Jan., B – Feb., C – Mar., D – April, E – May, F – June, G – July, H – Aug., J – Sept., K – Oct., L – Nov., N – Dec.).

XXX – Arbitrary numbers and letters assigned per factory work order.

001 – Serial number of unit on a given factory work order (001-999).

78 Z A XXX 001

This manual pertains to the regulator with serial number shown in box above.

CONTENTS

GENERAL 1
MAJOR PARTS 1
OPERATION SEQUENCE 3
POWER CIRCUIT 3
SERVICING 3
TROUBLESHOOTING AND SERVICING 3
General 3
Motor 4
Capacitor 4
Tap Changer 4
REMOVING AND REPLACING TAP CHANGER 4
REPLACING MOTOR 5
REPLACING CONTACTS 6
All Stationary Contacts 7
Main Movable Contacts 7
Reversing Movable Contacts 7
REPLACING POSITION INDICATOR 8

GENERAL

A stored energy, spring drive device is used on all regulators rated 219 amps and below and 13800 maximum volts. This assembly is identified as Model No. 928A. Table 1 identifies the application of this switch, and Figure 1 illustrates the entire switch assembly.

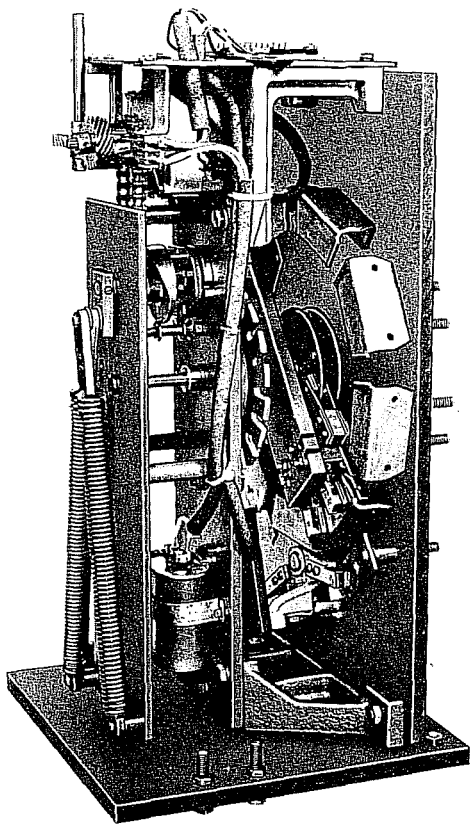

MAJOR PARTS

Motor – The motor is capacitor start, capacitor run, high torque, low rpm, reversing, gearmotor, rated 115 volts, single-phase. All components are suitable for use in hot transformer oil, and the windings are oil cooled. The motor can carry locked rotor current indefinitely.

Contacts – Several connection conditions are satisfied by the variety of contact structures. They can be simply divided into arcing and non-arcing.

Non-Arcing Contacts – The non-arcing contacts consist of the upper and lower collector rings which serve as the connection point for opposite ends of the reactor windings and one end of the two main movable contacts which are in continuous sliding contact with the collector rings. All contact surfaces are Electrical Tough Pitch (ETP) copper and all joints are riveted, bolted, or silver alloy brazed to maintain a high conductivity current path. Contact pressure between moving points is maintained by steel leaf springs that have been copper coated to provide optimum conductivity. The main movable contact is split to make contact on both surfaces of the slip ring and resist separation in the event of high current surges.

These instructions do not claim to cover all details or variations in the equipment, procedure, or process described, nor to provide directions for meeting every possible contingency during installation, operation, or maintenance. When additional information is desired to satisfy a problem not covered sufficiently for the user's purpose, please contact your McGraw-Edison Power Systems Division sales engineer.

McGraw-Edison Company
Power Systems Division
Canonsburg, Pennsylvania 15317

June 1978
New Issue

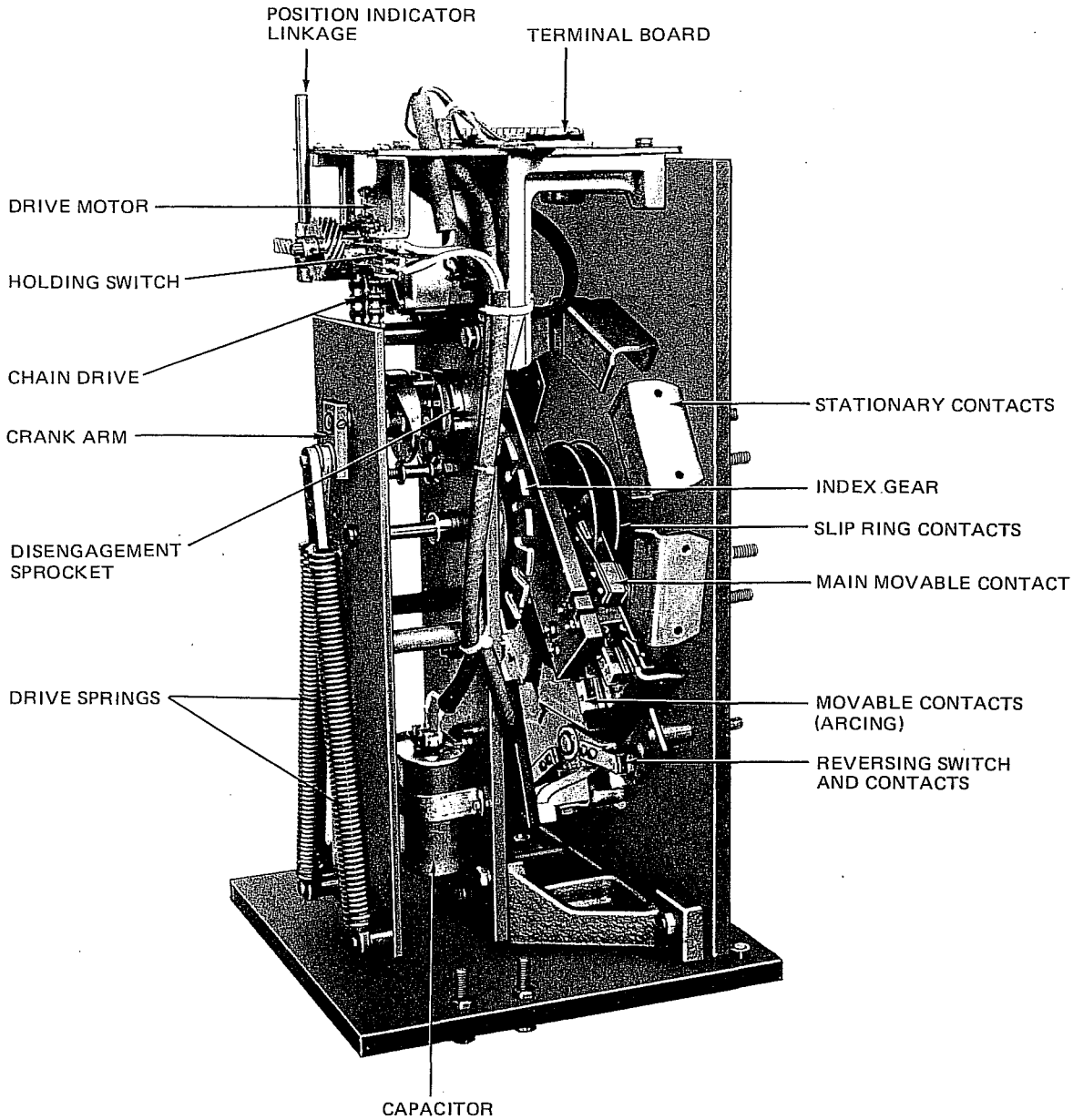

Figure 1

Table 1
Switch Application

LOAD CURRENT (amps)	2.5 kv	5.0 kv	7.6 kv	13.8 kv
25			928B	
50		928B	928B	928B
75			928B	
100	928B	928B	928B	928B
150	928B		928B	
167				
200		928B		928B
219			928B	

Arcing Contacts – The arcing contacts are:

1. The main stationary contacts, which are connected to the series winding taps, and one end (opposite from above) of the main movable contacts which connect the slip rings to the main stationary contacts.
2. The reversing stationary contacts which are connected to opposite ends of the series windings, and the reversing movable contacts which connect the neutral stationary and load bushing to the reversing stationary contact.

All stationary contact bodies are made of ETP copper. Copper-tungsten inserts are silver alloy brazed into the edges that are subject to damage from impact or arcing duty.

The arcing end of the main movable contacts use a copper-tungsten face riveted to a flexible copper strap and steel saddle. The saddle serves to align the free end of a copper-coated, steel leaf spring. The spring is formed around a pin in the saddle to produce a pivot that permits contact alignment between mating surfaces. The main movable contact is split to make contact on both sides of the mating contacts and resist separation in the event of high current surges.

The reversing movable contacts are the same construction

as the main movable contact. An additional copper-coated, steel leaf spring is used to increase contact pressure.

Reversing Switch – The reversing switch function is to change the polarity of the series winding relative to the shunt winding.

When the tap changer is in the neutral position, the reversing switch is open. The load current is carried from the source bushing through the reactor, collector rings, main movable contacts and neutral stationary contact to the load bushing.

The reversing switch motion occurs as the main movable contacts enter or leave neutral. A pin on the contact drive sprocket assembly engages a slot in the reversing segment when the main switch is in the neutral position. The first tap step in either direction rotates the segment and the reversing switch to engage the appropriate reversing stationary.

The drive sprocket pin and reversing segment provide a mechanical stop located approximately 320 degrees on either side of neutral. When the pin engages the end of the segment the spring drive mechanism will be loaded, but locked so as to prevent any further motion in that direction.

Drive Springs – Two steel extension springs are arranged in a triangular configuration to provide positive "spring-over-center" action to move the switch contacts. Each spring is provided with an inside guide which incorporates a dash pot construction that acts to dampen the shock of the mechanism.

OPERATION SEQUENCE

When the switch is in the neutral position, and the control calls for a tap change, the following events occur:

1. Motor starts.
2. Motor holding switch closes assuring that one tap change will be completed.
3. The up slope of disengagement sprocket cam engages the lip of the cam spool. This lifts the engagement pin, in the drive pin cam, free of the hole in the drive mechanism actuator.
4. Projection on disengagement sprocket cam contacts leg on drive pin cam and both turn.
5. Drive shaft, which is pinned to drive pin cam, begins to turn crank arm and springs begin to extend.
6. Engagement pin comes free from the lip on the spool and a spring pushes it against surface of drive mechanism actuator.
7. Down slope of disengagement sprocket cam returns spool to start position.
8. Engagement pin drops into hole in drive mechanism actuator 180 degrees from start position.
9. At this point the crank arm is at top dead center and the springs are fully loaded. Drive shaft and crank arm, disengagement sprocket cam, drive pin cam, and drive mechanism actuator are locked together and connected through the chain to the motor.
10. Motor drives all parts beyond top dead center.
11. Spring unloads instantaneously pulling drive pin cam and drive mechanism actuator through 180 degrees at high speed. Pins on drive mechanism actuator cause contact drive sprocket to index one tap position.
12. As the contact drive sprocket moves, it imparts motion to the reversing switch actuating segment and main movable contacts. This action closes the reversing movable and reversing stationary contacts, and drives the main movable contact onto the adjacent main stationary contact. Also, the neutral light switch opens.
13. Motor continues to turn sprocket cam until the motor holding switch opens. The motor has completed one revolution.

Should more than one tap change be required, the foregoing sequence will be repeated (except reversing switch portion) until the control is satisfied, or the limit switch in the position indicator is reached.

POWER CIRCUIT

The schematic diagram shown in Figure 2 illustrates the basic power circuit utilized in McGraw-Edison regulators.

This circuit is used in all regulators having current ratings to 668 amps inclusive. These regulators use an autotransformer circuit. The circuit consists of a tapped series winding, a shunt winding across the regulator output terminals, a potential winding closely coupled to the shunt winding, and a current transformer primary winding on the load line.

The potential winding is coupled to the shunt winding in a ratio determined by the regulators voltage rating. The current transformer, through its secondary winding, reflects any variation in line current to the line-drop compensation circuit in the control cabinet.

SERVICING

It will be necessary to open the regulator for inspection purposes, routine maintenance, or for repair when trouble-shooting procedures, as outlined in S225-10-2, have isolated the problem to an internal malfunction.

This discussion outlines maintenance and service procedures relating to regulator components other than the control. Before any internal or external maintenance is performed, the regulator should be removed from service.

Refer to S225-10-1 for –

1. *Removing the regulator from the line.*
2. *Untanking and retanking procedures.*
3. *Connecting the regulator into service.*

TROUBLESHOOTING AND SERVICING

GENERAL

The following troubleshooting and servicing functions are done with the regulator partially untanked as outlined in S225-10-1.

Experience has shown that common causes of internal problems are the motor, the capacitor, or broken wires.

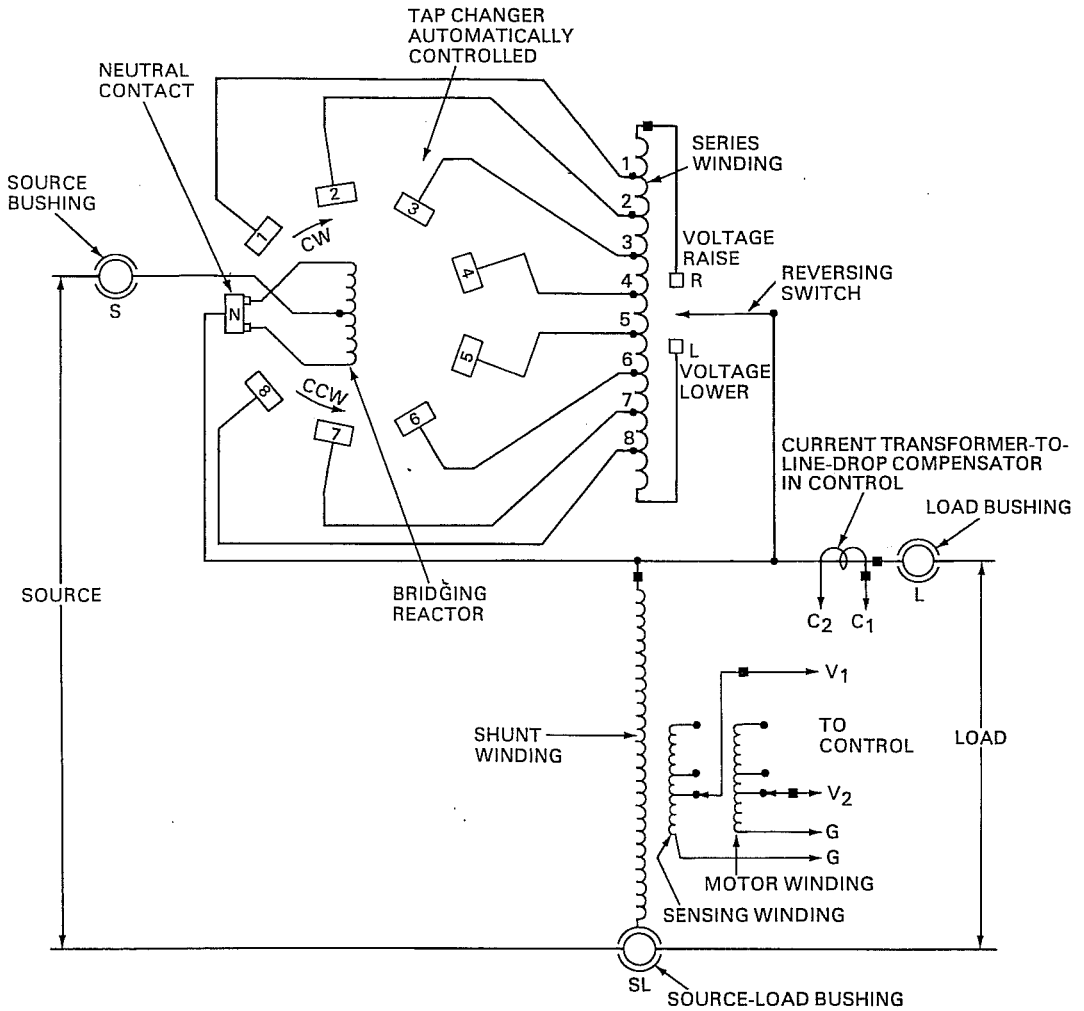

Figure 2

Check the connections between the control, the terminal block, and the tap changer (Figure 3). Look for burned or loose connections.

If this check is satisfactory, examine the tap changer drive mechanism to be sure that the motor operation is not mechanically blocked by a damaged part.

MOTOR

The spring drive tap changer has gearing within the motor case. Check for free rotation by manually rotating the position indicator drive gear on the motor shaft in both directions. If the motor will not turn it should be considered defective.

If the drive mechanism is free, check the raise and lower limit switches for continuity. A lack of continuity indicates a defective limit switch.

CAPACITOR

If all the above is satisfactory, check the motor capacitor. Disconnect all leads from the capacitor and read continuity between the terminals. The meter should show initial continuity and then slowly drop to zero. If steady continuity is found, the capacitor is defective. If continuity is not found, apply 120 vac across the capacitor. Current for the 15 microfarad capacitor ahould be 0.56 amps to 0.85 amps. Readings outside these values indicate a defective capacitor.

TAP CHANGER

First check the tap changer terminal board assembly. Locate any loose parts and eroded contacts. Inspect the insulating panel for arcing damage and replace the panel if tracking is present. Examine the stationary contacts, moving contacts, collector rings, and reversing switch. Tighten loose parts and replace any excessively eroded contacts.

Stationary contacts should be replaced before the arcing inserts erode to the point where there may be burning on the copper. A movable contact should be replaced when approximately 3/16 inch of smooth rubbing surface remains.

Examine the drive mechanism for loose or worn parts. Components such as the index gear, drive pin, and disengagement sprocket cam should be replaced if they show signs of appreciable wear.

REMOVING AND REPLACING TAP CHANGER

Loosen the set screws at bottom of the position indicator flexible shaft. Lift the flexible shaft free of the tap changer.

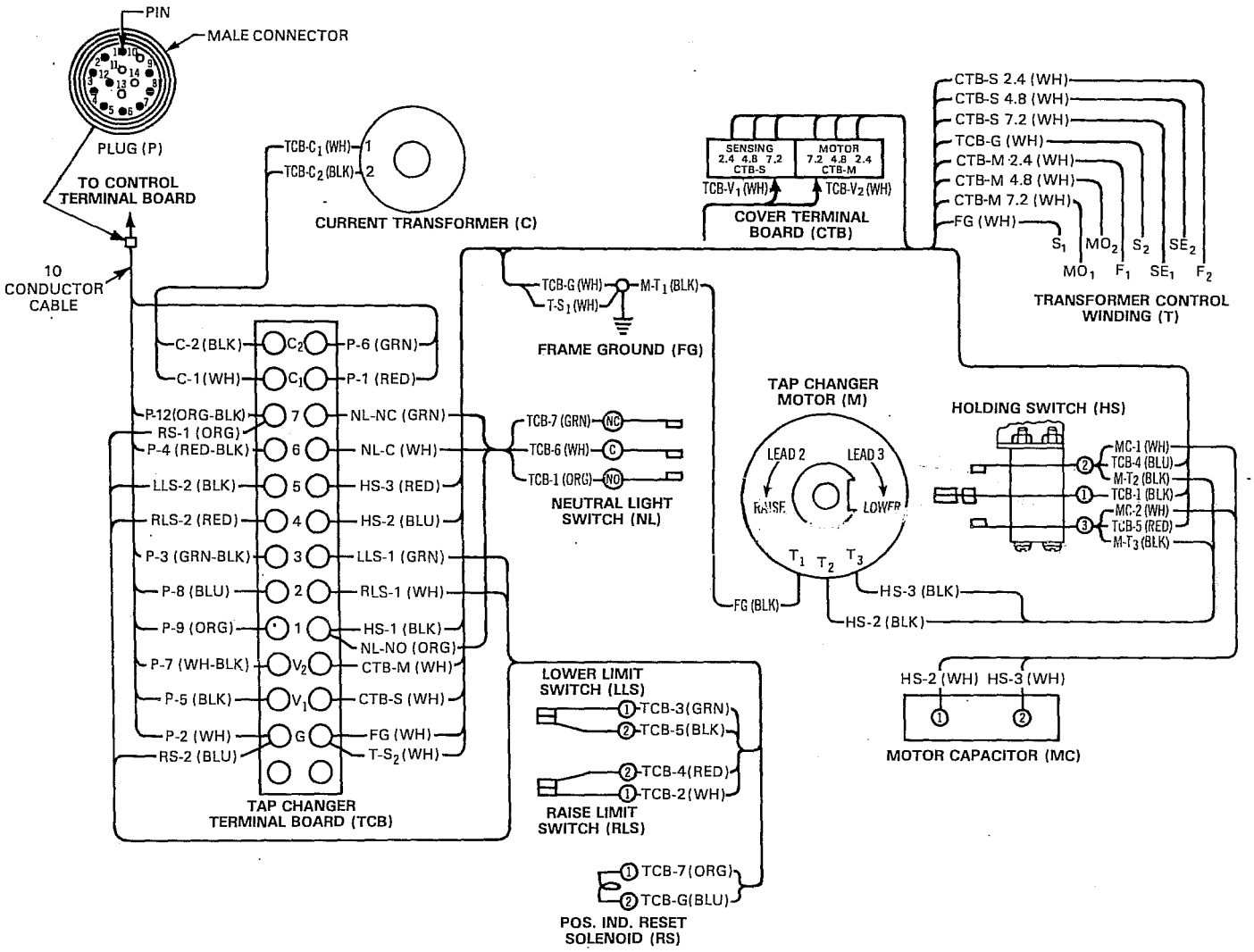

Figure 3

Disconnect all position indicator and control leads from the terminal board.

Disconnect the potential leads from V1 and V2 on the terminal board (Figure 5). These leads and the ground lead are contained in a paper tube running up the right side of the tap changer. Remove the ground lead from the motor mounting bolt on the top plate of the tap changer, and replace and tighten the motor mounting bolt. Do not remove other ground connections at this location. Remove the ties fastening the paper tube to the tap changer and lay the bundle against the side of the tank.

Disconnect all main and reactor winding leads from the tap changer and place the hardware on the studs for safe keeping. The lead terminals are marked to correspond to the stud identification.

Disconnect the current transformer leads from C1 and C2 on the terminal board, and unfasten the "SL" bushing lead guide from the top plate on the tap changer. Check and remove electrical connections for special applications. The tap changer is now electrically isolated from all standard and special components.

Remove the mounting bolts fastening the tap changer to the top core clamp and slide the tap changer out over the tank edge. It is recommended that two workmen perform this operation.

Tap changer replacement should be the reverse order of the foregoing instructions. Check that all electrical connections, including ground, have been remade and tightened. Connect the control and position indicator leads to the terminal board per the wiring diagram (Figure 3). Restore all lead bundle ties. Replace the position indicator as described in "Replace Position Indicator". Retank as described in S225-10-1.

REPLACING MOTOR

Extreme caution is recommended to avoid dropping loose parts into the windings.

1. Locate the master link in drive chain, disassemble, and remove chain.
2. Loosen set screws on bottom end of position indicator flexible drive shaft.
3. Remove the position indicator drive shaft, bracket, bearing, and worm gear assembly from the mounting plate.
4. Cut tie wraps on motor lead bundle. Number 1 motor

lead runs through the insulating tube extending through the mounting plate and is securely grounded under the right rear motor mounting bolt. Cut the lead approximately 1/4 inch from end of crimp terminal, and remove any insulation on stub.

5. Motor leads Number 2 and Number 3 are soldered to the holding switch at the outside contacts. Cut both leads approximately 1/4 inch from the solder and remove any insulation remaining on the stub.
6. The motor can now be unbolted from the mounting plate by removing three hex head bolts.

> **CAUTION**
>
> Do not damage holding switch assembly. Retain motor ground lead crimp terminal.

7. Slide motor out to side away from holding switch.
8. Remove motor mount from motor.

The replacement motor is furnished complete with drive sprocket, gear, and marked (but uncut) leads.

9. Bolt motor mount to motor.
10. Slide motor into position with slot on drive sprocket aligned with arm on holding switch. Align drive sprocket with disengagement sprocket cam and install front and left rear motor bolts.

> **CAUTION**
>
> Do not damage holding switch.

11. Run Number 1 motor lead through tube to right rear motor mounting bolt and cut to length. Solder this lead to the crimp terminal, or crimp on a new terminal. Place white ground wire from terminal board and Number 1 motor lead under bolt and secure.
12. Solder Number 2 and Number 3 motor leads to studs on holding switch per Figure 4.

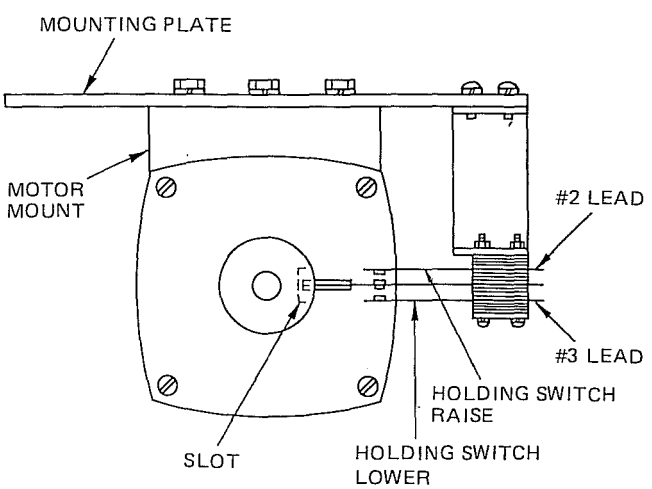

Figure 4

13. Connect 120 vac supply to the terminal board per Figure 5. Closing the raise switch should cause a counterclockwise motor rotation. Closing the lower switch should cause a clockwise motor rotation. Stop motor with slot aligned with holding switch arm and switch open. Disconnect power.
14. Replace drive chain.
15. Restore lead bundle ties.

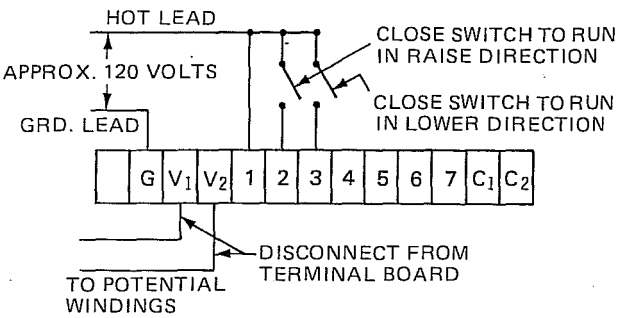

Figure 5

16. Replace position indicator drive shaft, bracket, bearing, and worm gear assembly.

    Insert drive shaft in lower end of flexible drive shaft. Adjust assembly for full engagement of gear teeth before final tightening of mounting screws.
17. Run tap changer to neutral position. See Figure 6 for neutral-position relationship.

The relationship of parts defining the neutral position are as follows: The main movable contacts must be on the neutral stationary contact at the bottom center of the tap changer. The reversing switch movable contacts must be open and not making contact with either reversing stationary contact. The crank arm eccentric must be on the vertical centerline at the bottom with both springs equally extended. The projection on the back of the disengagement sprocket cam must be on the vertical centerline at the bottom. The engagement pin in the drive pin cam must be on the vertical centerline at the bottom and fully engaged in the bottom hole in the drive mechanism actuator. The vee-shaped legs on the engagement pin cam must be at the top. The pins on the back of the drive mechanism actuator should be on the horizontal centerline and resting in the contact drive sprocket slots on both sides of the sprocket arm. The sprocket arm should be on the vertical centerline at the top and engaged in the slot on the movable contact insulator. The motor holding switch should be open.

18. Turn the position indicator flexible drive shaft to center the indicator hand on the zero position on the indicator dial.
19. Tighten set screws on bottom end of flexible drive shaft.

The tap changer is now ready for normal duty.

REPLACING CONTACTS

It is recommended that the tap changer be removed from the main core-and-coil assembly to change contacts. This

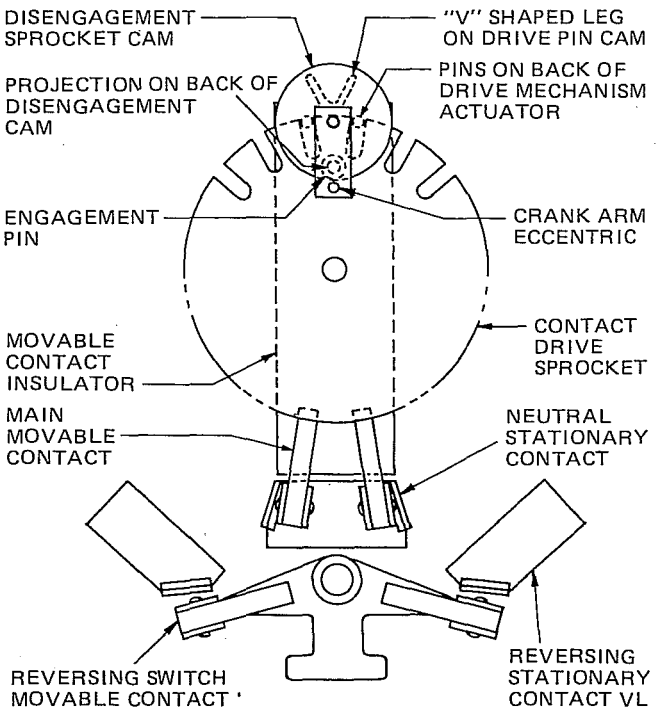

Figure 6

action is necessary to permit proper contact assembly and alignment, and to eliminate the possibility of loose parts dropping into the winding. Bolt or clamp the cast mounting bracket to the workbench. Do not lay the tap changer down as this may damage the threads on the studs.

ALL STATIONARY CONTACTS

1. Any stationary can be removed by locating the movable contact on another position and removing the hardware from the back side of contact panel for the contact to be changed. See Figure 5 for the method of running tap changer. Note location of connection identification for restoration.

Replacement contacts are furnished ready to use, but will require final adjustment.

2. Insert contact pins through contact panel and replace hardware. Tighten all nuts securely.
3. Bend contact body to align with surface plane of other contacts. This adjustment is essential to assure proper alignment and mating with the movable contacts. Poor alignment can cause contact damage and a jammed tap changer.
4. Repeat steps 1, 2, and 3 for each contact requiring replacement.
5. Disconnect drive springs from drive shaft crank arm and remove drive chain.
6. Tap changer can now be moved through all positions by hand turning the crank arm.
7. Check contact alignment at all positions and the ease of driving movable contact onto stationary contact. Bend stationary contact bodies to produce smooth operation.
8. Move switch to neutral position. See Figure 6 for neutral-position relationship.
9. Reconnect the drive springs to the crank arm and replace the drive chain. Reconnect power supply.
10. Run the tap changer through all positions.

MAIN MOVABLE CONTACTS

1. Connect 120 vac supply per Figure 5. Run the tap change to neutral and disconnect power supply.
2. Loosen nuts holding movable contact assembly to the movable contact insulator to permit the flat washer and lock washer to be moved out of recess in the insulator.
3. Slide the contact assembly free of stationary contact and collector ring and remove.

Replacement contacts are furnished complete with all necessary hardware and ready for installation.

4. On the new contact, back the nuts off to flush with end of bolt.
5. Place one drop of Loctite sealant, Type A, on the bolt threads at nut end.
6. Slide the movable contact onto the stationary contact and collector ring and engage bolts in slots on the insulator. **Do not** twist or bend the contact fingers when sliding onto collector rings and stationary contacts. Such action could damage the leaf spring and reduce contact pressure. The movable contact button must rest flat on the surface of the collector ring. If necessary use needle-nose pliers to adjust for this condition, being careful not to bend the leaf spring.

> **CAUTION**
>
> Right hand movable contact must engage upper collector ring.

7. Connect 120 vac power supply per Figure 5 and run tap changer through all positions.

REVERSING MOVABLE CONTACTS

1. Connect 120 vac power supply per Figure 5 and run tap changer to neutral position. See Figure 6 for neutral-position relationship. Disconnect power supply.
2. Remove the hardware on the back of the contact panel from reversing switch post.
3. Unbolt the reversing switch flexible lead from the back of the neutral stationary contact, and push the loose end through the hole in the panel.
4. Remove the nut, flat washer, and lock washer from the reversing switch post on the back of the contact panel.
5. Hold the body of the reversing switch with a firm hand and tap the threaded end of the reversing switch post with soft mallet, being careful not to damage the threads. The knurled portion of the post will come free from the contact panel.

6. Loosen the lock nuts on the bolts fastening insulating panel to lower bracket and back the bolts off approximately three turns. The panel can now be pulled away from the bracket. Pull the post completely free of contact panel, disengage the reversing switch insulating arm from the pin on contact drive sprocket, and slide the reversing switch out to the side, being careful not to lose the brass washer between the switch body and panel.
7. Remove the locking ring from reversing switch post and pull post from body of reversing switch.

The replacement reversing switch is furnished complete with flexible lead and contacts assembled, but without reversing switch post.

8. Insert the unthreaded end of reversing switch post into the body of reversing switch and replace the locking ring. Push post as far into body as possible. Place the brass washer on the threaded end of the post.
9. Slide reversing switch assembly through stationary contact circle from the side, pull panel away from bracket, and start threaded end of post into hole in contact panel making sure that the brass washer remains between switch body and panel.
10. Engage the slot in insulating arm on pin on contact drive sprocket and insert the flexible lead through hole in contact panel. Push post through contact panel until knurl engages. Align knurl with matching grooves in hole by feel, replace flat washer, lockerwasher, and nut and tighten until knurl is completely seated. Continue tightening until lockwasher is flat.
11. Place the free end of the flexible lead on the threaded pin from neutral stationary, replace all hardware and tighten securely.
12. Check the alignment of all drive components to assure correct neutral-position relationship as shown in Figure 6.
13. Reconnect the power supply and run the tap changer through neutral several times. Disconnect the power supply.

REPLACING POSITION INDICATOR

Replacing a defective position indicator requires removing the regulator from service and untanking as outlined in S225-10-1.

Raise the unit until the top of the tap changer is even with the top of tank. The tap changer should be in the neutral position as shown in Figure 6. If necessary, connect a 120 vac power supply per Figure 5 and run the tap changer to neutral.

Disconnect the six leads from the terminal board on the tap changer and remove the lead ties from the control and indicator bundle. Loosen the two set screws at bottom of the flexible drive shaft and disengage shaft. Remove the four bolts fastening the indicator body to the goose-neck casting mounted to the cover. Pull the indicator away to withdraw the flexible shaft and leads. Remove the flexible shaft by unscrewing the knurled sleeve where the shaft is connected to the indicator gears.

The replacement indicator is furnished complete with a mounting gasket, six crimp terminals, and a standard uncut lead length. The limit switches are set for plus or minus ten percent regulation.

Using the old indicator as a guide, cut the leads to length. Strip the insulation 1/4 inch back from the free end and crimp the terminals to the lead. Attach the flexible shaft to the indicator and tighten the knurled sleeve.

Clean the gasket seat on the indicator and mating surface of the goose-neck on the cover. Place the gasket in the seat and insert the leads and flexible shaft through the goose-neck. Bolt the indicator to the goose-neck with the neutral position at the top.

Connect the leads to the terminal board per Figure 7 and tighten all connections. Tie the indicator and control leads into one common bundle at two points or more.

The indicator flexible drive shaft can be placed directly onto the shaft on the tap changer. With the tap changer in the neutral position, turn the flexible shaft until the position indicating hand is centered on the zero position on the indicator dial. Tighten both set screws at the bottom end of the flexible shaft.

Connect a 120 vac power supply per Figure 5, and run the tap changer to the raise and lower extremes and check the indicator tracking and limit switch settings. If satisfactory, stop the tap changer in the neutral position and disconnect the power.

Retank the regulator per instructions in S225-10-1. Apply 120 vac external power to the tap changer and run it to the raise and lower extremes per Figure 5. Return to the neutral position and disconnect power.

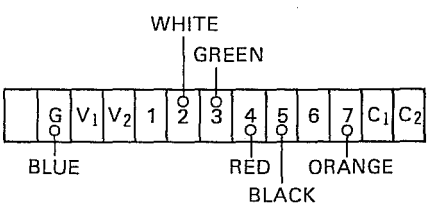

Figure 7

Voltage Regulators

COOPER
Cooper Power Systems

McGraw-Edison® VR-32 Regulator and CL-4C Control Installation, Operation and Maintenance Instructions Parts Replacement Information

Service Information
S225-10-4C

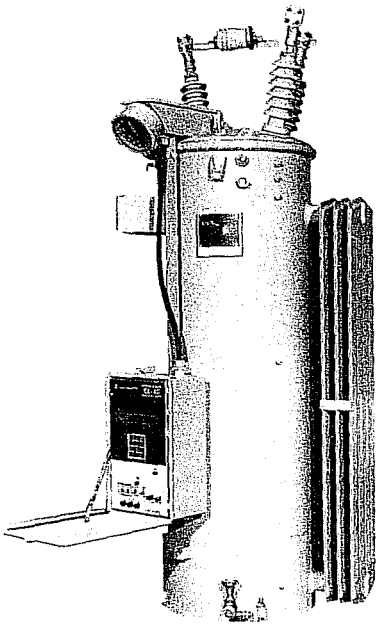

TABLE OF CONTENTS

VR-32 REGULATORS - SECTION 1
Introduction 1-3
Receiving 1-3
INSPECTION 1-3
UNLOADING 1-3
STORING 1-3
Installation 1-3
PRE-INSTALLATION INSPECTION 1-3
SYSTEMS CONNECTIONS 1-3
MOUNTING 1-4
PLACING A REGULATOR INTO SERVICE 1-5
SETTING THE CONTROL FOR SERVICE 1-6
OPERATIONAL CHECK 1-8
Field Calibration Check 1-8
Removal From Service 1-8
DETERMINING NEUTRAL POSITION 1-8
DE-ENERGIZING THE REGULATOR 1-9
Maintenance Program 1-9
PERIODIC INSPECTIONS 1-9
REMOVAL OF CL-4C FRONT PANEL 1-9
REPLACEMENT OF CL-4C FRONT PANEL 1-9
UNTANKING THE REGULATOR 1-9
RETANKING THE REGULATOR 1-10
MAINTENANCE 1-10
Construction 1-10
SURGE PROTECTION 1-10
POSITION INDICATOR & ADD-AMP 1-11
INTERNAL CONSTRUCTION & WIRING DIAGRAMS 1-13

CL-4C REGULATOR CONTROL - SECTION 2
Introduction 2-2
Specifications 2-2
Pre-Installation Operational Check 2-2
In-Service Operational Check 2-3
Function Code Description 2-5
Differential Voltage 2-25
Accessory Operation 2-25
DEMAND TASK 2-25
REVERSE POWER OPERATION 2-25
COMMUNICATIONS 2-28
VOLTAGE REDUCTION 2-30
VOLTAGE LIMITING 2-31
System Protection, Diagnostics 2-31
Security System 2-32
Setting the CL-4C Control for Service 2-32
Control System Design and Operation 2-37
Supervisory Control and Data Acquisition 2-43
Field Trial CL-4 Controls 2-45
VR-32 REGULATOR TAP CHANGER - SECTION 3
Tap Changer Operation 3-1
Motor 3-1
Reversing Switch 3-1
Drive Mechanisms 3-2
Contacts 3-3
Operating Sequence 3-3
TROUBLE SHOOTING GUIDE - SECTION 4
Complete Regulator In Service 4-1
EXTERNAL CHECK 4-1
DEFINING THE PROBLEM 4-1
CONTROL TROUBLE SHOOTING 4-1
JUNCTION BOX TROUBLE SHOOTING 4-2
POSITION INDICATOR REPLACEMENT 4-3
Control Calibration 4-3
VOLTAGE CALIBRATION 4-3
CURRENT CALIBRATION 4-3
ACCESSORIES - SECTION 5 5-1
SPARE PARTS - SECTION 6 6-1
APPENDIX - SECTION 7
Serial Numbers 7-1
List of Tables 7-1
List of Schematic Diagrams 7-1
Security Codes 7-1
Function Codes 7-2
Key Entry Error Codes 7-2

This manual pertains to these **SERIAL NUMBERS:**

REGULATOR:

CONTROL:

Refer to page 1-2 of these instructions for the definitions of warning and caution alerts. These instructions do not claim to cover all details or variations in the equipment, procedure, or process described, nor to provide directions for meeting every possible contingency during installation, operation or maintenance. When additional information is desired to satisfy a problem not covered sufficiently for the user's purpose, please contact your Cooper Power Systems representative.

September 1991 • Supersedes 9/90 • 1991 ©Cooper Powers Systems, Inc.

VR-32 Regulator and CL-4C Control

1. CLAMP-TYPE TERMINALS
2. THREADED-STUD BUSHING TERMINALS
3. MOV-TYPE SERIES ARRESTER
4. BUSHINGS
5. UPPER FILTER PRESS CONNECTION
6. ARRESTER MOUNTING BOSSES
7. BALL-TYPE OIL SIGHT GAUGE
8. PANEL-TYPE RADIATORS
9. DRAIN VALVE & OIL SAMPLING DEVICE
10. BOLT-DOWN PROVISIONS
11. GROUND BOSSES (2)
12. CONTROL
13. CONTROL ENCLOSURE
14. NAMEPLATES (2)
15. POLE-TYPE MOUNTING BRACKETS
16. ENCLOSURE SUPPORT BAR
17. CONTROL CABLE
18. REGULATOR LIFTING LUGS
19. POSITION INDICATOR
20. JUNCTION BOX
21. INTERNAL ASSEMBLY LIFTING LUGS
22. HANDHOLE COVER

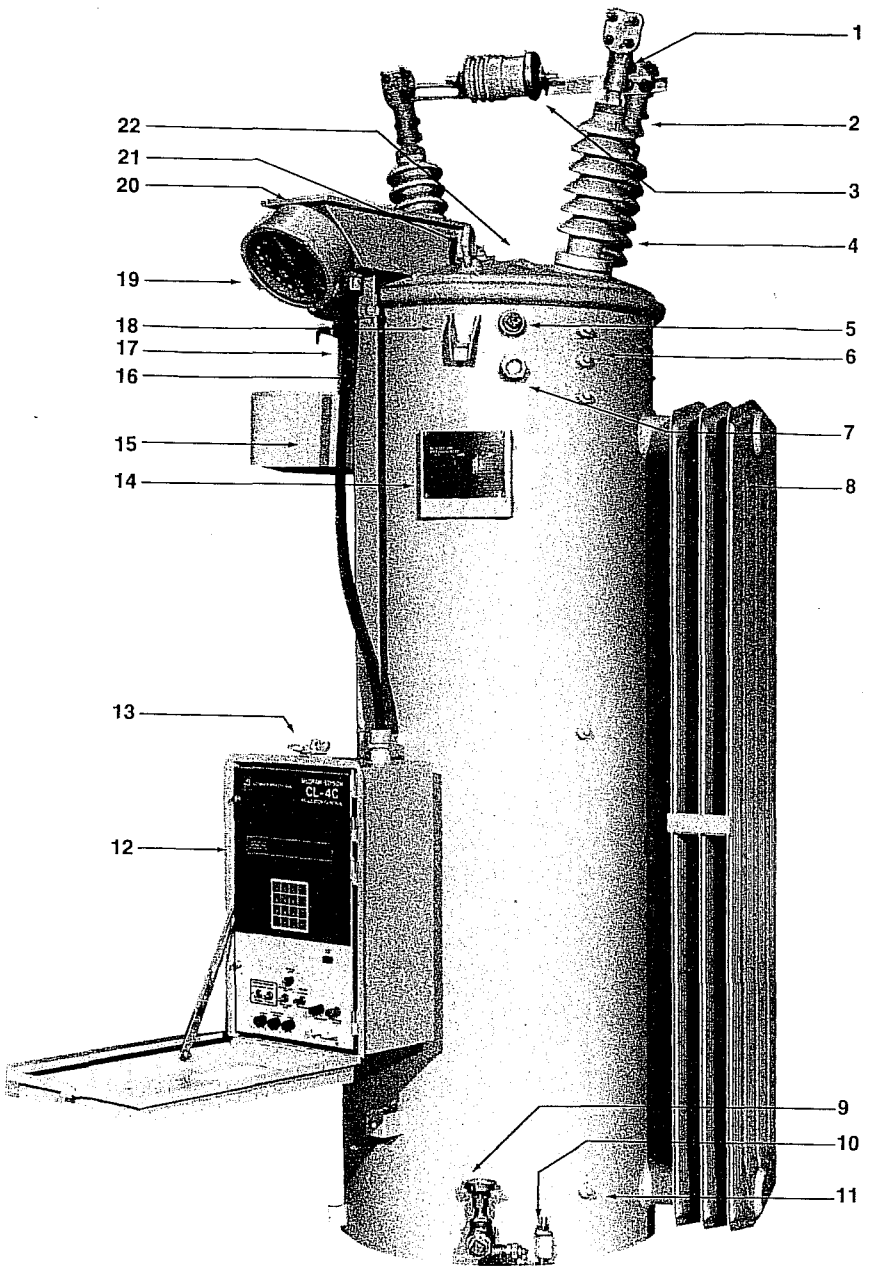

Figure 1-2
Features of the VR-32 Voltage Regulator.

DEFINITIONS OF ALERTS: PLEASE READ THE FOLLOWING CAREFULLY AND HEED THE WARNINGS, CAUTIONS, AND NOTICES HEREIN.

⚠ WARNING:
A WARNING describes a potentially hazardous situation which, if not avoided, could result in death or serious injury.

⚠ CAUTION:
A CAUTION describes a potentially hazardous situation which, if not avoided, could result in minor or moderate injury.

NOTICE:
A NOTICE describes a situation which, if not avoided could result in damage to the equipment with no likelihood of personal injury.

VR-32 VOLTAGE REGULATORS - Section 1

INTRODUCTION

McGraw-Edison VR-32 feeder voltage regulators are regulating auto-transformers. They regulate line voltage from ten-percent raise (boost) to ten-percent lower (buck) in 32, approximately 5/8 % steps.

McGraw-Edison regulators are supplied with the following standard features:

Dual-rated 55/65°C rise.
ADD-AMP capability.
Unit construction.
Sealed-tank construction.
Pressure relief device.
High-creep bushings with clamp-type terminals.
MOV-type external series arresters.
Shunt arrester mounting bosses.
Two nameplates.
Oil sight gauge.
Upper filter press connection.
Drain valve and oil-sampling device.

The 65°C rise insulation system and the sealed-tank construction allow for a BONUS CAPACITY 12% above the 55°C normal rating without loss of normal insulation life. The BONUS CAPACITY is stated on the nameplate (such as 167/187 kVA for a nominal 167 kVA regulator), and is available when the ADD-AMP feature is not in use. All McGraw-Edison regulators are manufactured and tested to ANSI standard C57.15.

The unit construction, which suspends the internal assembly and the control enclosure form the cover, allows for ease of inspection and maintenance.

There are three types of step-voltage regulators: source-side series winding, load-side series winding, and series transformer. McGraw-Edison Regulators are usually equipped with an equalizer winding. The nameplates located on the tank and control box clarify the power circuit involved.

RECEIVING

Inspection

Prior to shipment, the regulator is thoroughly tested and inspected at the factory. Immediately upon receipt of the regulator shipment, before unloading, a thorough inspection should be made for damage, evidence of rough handling, or shortages. The position indicator, junction box, arrester, radiators, and bushings should all be inspected for evidence of damage. **Should this initial inspection reveal evidence of rough handling, damage, or shortages, it should be noted on the Bill of Lading and a claim should immediately be made with the carrier.** Also, notify Cooper Power Systems, 2300 Badger Drive, Waukesha, Wisconsin 53188, attention Service Manager.

Unloading

When an overhead crane is used for unloading, the regulator must be lifted by means of a sling and spreader bar utilizing the tank-mounted lifting lugs which are shown in Figure 1-2. Do not lift the entire unit with the lifting eyes on the cover. The lifting eyes are only to be used to untank the internal assembly which is attached to the cover.

⚠ WARNING:
The cover may fracture if the cover-mounted lifting eyes are used to lift the entire unit. Lift the entire unit only with the tank-mounted lifting lugs.

Storing

If the regulator is not to be placed into immediate use, it can be stored with minimal precautions. Locate the unit where the possibility of mechanical damage is minimized.

INSTALLATION

Pre-installation Inspection

Before connecting the regulator to the line, make the following inspection:

1. Check the oil sight gauge. Look for visible signs of oil leakage.
2. Examine the series arrester for damage. If damaged, install a new arrester of the same voltage rating.
3. Inspect the porcelain bushings for damage or leaking seals. If there is a suspicion that moisture has entered the unit, remove the handhole cover and inspect for evidence of moisture such as rust or water tracks in the oil. If moisture has entered the tank, dry the regulator and filter the oil before putting the unit in service. The oil must test 26 kV minimum in a standard gap (ASTM D-877). Be sure to properly replace the handhole cover.

⚠ CAUTION:
Do not subject tap changer to temperatures above 150°F. To do so may cause damage to the contact panels, resulting in misalignment of the contacts.

4. If the regulator has been stored for some time, test the dielectric strength of the oil according to ASTM D-877.
5. The regulator may be energized at rated line voltage (with caution) and an operational check, page 1-8, can be performed. (This procedure is optional.)
6. A Hi-pot test may be done to insure adequate electrical clearances to ground. (This procedure is optional.)

Systems Connections

A regulator can regulate a single-phase circuit, or one phase of a three-phase wye or delta circuit. Two regulators connected phase-to-phase in open-delta, or three regulators connected phase-to-phase in closed-delta, can regulate a three-phase, three-wire delta circuit. When connected in wye, three regulators can regulate a three-phase, four-wire multi-grounded-wye circuit. Three regulators **cannot** be connected in wye on three-phase, three-wire circuits because of the probability of neutral shift. Typical connection diagrams are illustrated in Figure 1-3.

⚠ WARNING:
Connect the "S" bushing to the SOURCE, the "L" bushing to the LOAD, and the "SL" bushing to NEUTRAL. To do otherwise may cause excessively high or low voltage on the load side of the regulator or cause severe damage to the regulator.

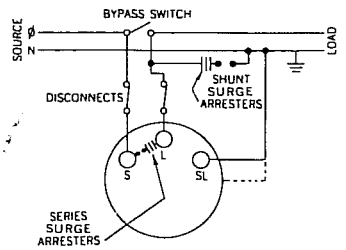

REGULATING A SINGLE-PHASE CIRCUIT.

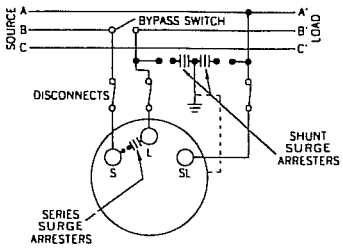

REGULATING ONE PHASE OF A THREE-PHASE, THREE-WIRE CIRCUIT.

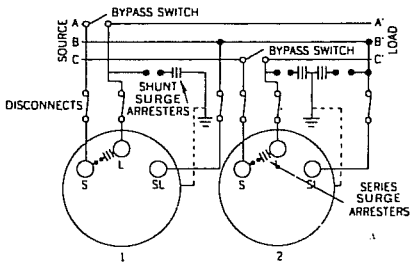

REGULATING A THREE-PHASE, THREE-WIRE WYE OR DELTA CIRCUIT WITH TWO REGULATORS.

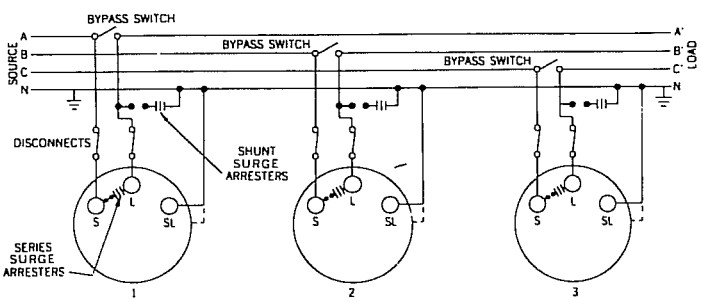

REGULATING A THREE-PHASE, FOUR-WIRE, MULTI-GROUNDED WYE CIRCUIT WITH THREE REGULATORS.

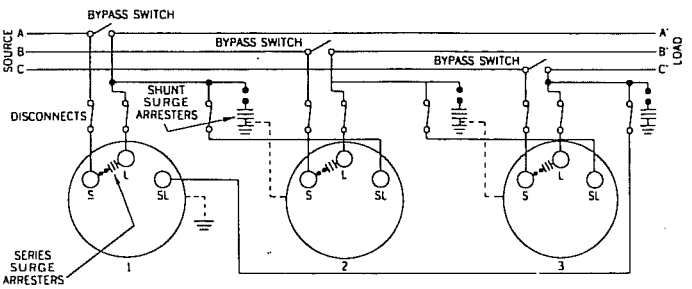

REGULATING A THREE-PHASE, THREE-WIRE DELTA CIRCUIT WITH THREE REGULATORS.

Figure 1-3
Typical connections diagrams.

NOTE: Individual switches are shown for the bypass and disconnect functions. However, a regulator-bypass-disconnect switch can be used in each phase to perform the bypassing and disconnecting operations in sequence. Each of these switches replaces one bypass and two disconnect switches shown in the diagrams.

Mounting

A regulator can be mounted on a pole, crossarm platform, or elevating structure (optional). Regulators are normally provided with either pole mounting brackets or a station platform according to the rating. This information is available in Table 3-1, page 3-1, by noting the S(Substation) suffix to the kVA. A McGraw-Edison elevating structure (Figure 1-4) can be used to simplify substation installation of regulators requiring a specific live part-to-ground clearance.

The regulator control can be mounted on the regulator tank, or at a point remote from the unit. Rubber-covered cable is available in lengths of 15, 20, 25, 30, and 35 ft for interconnection between the control and the regulator.

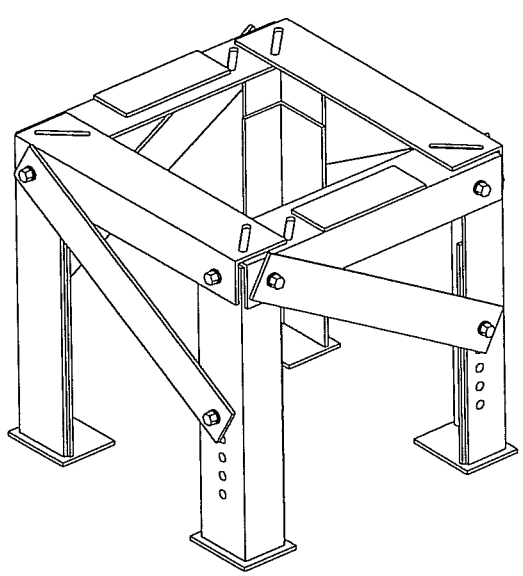

Figure 1-4
Elevating structure.

Placing A Regulator Into Service

Regulators can be placed in service without interrupting load continuity.

> **⚠ WARNING:**
> Closing the bypass switch with the tap changer off neutral will short circuit part of the series winding. Before closing the bypass switch, the regulator must be on NEUTRAL and the control switch set to OFF.

Procedure A should be followed when one bypass switch and two disconnect switches are used. Procedure B should be followed when a regulator bypass-disconnect switch is used.

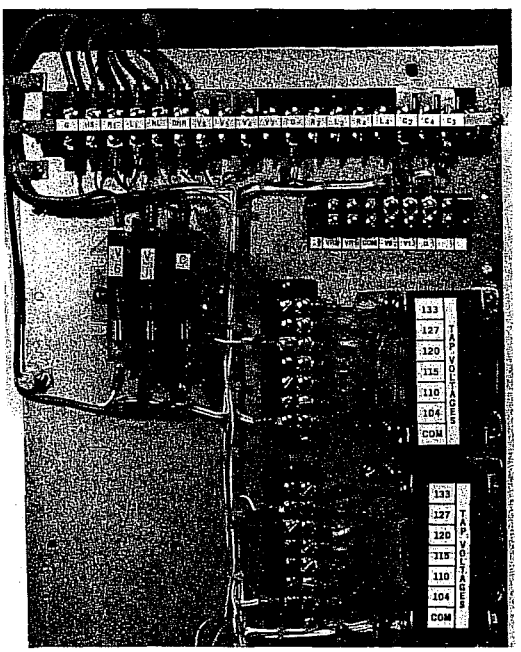

Figure 1-5
Knife switches and TB1 (with optional V_6 knife switch and RCT2).

> **⚠ CAUTION:**
> When installing a regulator, solidly ground both the regulator tank AND the control. Failure to do so may cause damage to the regulator and/or control due to current surges and may subject personnel to electrical shock.

A threaded stud is provided at the bottom of the control enclosure for grounding purposes.

PROCEDURE A: ONE BYPASS SWITCH AND TWO DISCONNECT SWITCHES

1. Verify from the regulator nameplate that the control circuit is connected for the proper regulated load voltage.
2. Set the POWER switch to OFF and the CONTROL switch to OFF.
3. The knife switches on the back panel should be set with the V_1 (potential switch) [and V_6 if present] closed (pushed in), and the C (CT shorting switch) open (pulled out). See Figure 1-5.
4. Close the SOURCE-LOAD (SL) disconnect switch. (Delta applications only).
5. Close the SOURCE (S) disconnect switch.
6. Set the POWER switch to INTERNAL and the CONTROL switch to MANUAL.
7. Lift the RAISE-LOWER switch to operate the tap changer two or three steps, then depress the RAISE-LOWER switch to return the tap changer to neutral position. (These steps verify the mechanism is functional.) When on neutral, the NEUTRAL LAMP will glow and the position indicator will point to zero.
8. With the regulator in neutral position, set the CONTROL switch to OFF, set the POWER switch to OFF, open the V_1 knife switch (back panel) [and V_6 if present], and remove the 6A motor fuse.
9. Close the LOAD (L) disconnect switch.
10. Open the BYPASS switch.
11. Replace the 6A motor fuse, close the V_1 knife switch and set the POWER switch to INTERNAL.
12. Go to *Setting the CL-4C for Service,* page 1-6.

PROCEDURE B: REGULATOR BYPASS-DISCONNECT SWITCH

1. Verify from the regulator nameplate that the control circuit is connected for the proper regulated load voltage.
2. Set the CONTROL switch to MANUAL and the POWER switch to EXTERNAL.
3. The knife switches on the back panel should be set with the V_1 (potential switch) [and V_6 if present] open (pulled out), and the C (CT shorting switch) closed (pushed in). See Figure 1-5.
4. Apply 120 volts to the EXTERNAL SOURCE terminals, if 120 volts is available. If not, proceed to Step 7, below.
5. Lift the RAISE-LOWER switch to operate the tap changer two or three steps, then depress the RAISE-LOWER switch to return the tap changer to neutral position. (These steps verify the mechanism is functional.) When on neutral, the NEUTRAL LAMP will glow and the position indicator will point to zero.
6. Remove the 120 volts from the EXTERNAL SOURCE terminals.
7. **With the regulator in neutral position,** set the CONTROL switch to OFF, set the POWER switch to OFF, and remove the 6A motor fuse.
8. Close the SOURCE-LOAD (SL) disconnect switch. (Delta applications only).
9. Close the regulator bypass-disconnect switch.
10. Replace the 6A motor fuse, close the V_1 knife switch [and V_6 if present], open the C knife switch, and set the POWER switch to INTERNAL.
11. Go to *Setting the CL-4C for Service,* page 1-6.

Setting The Control for Service

If the control has been previously set up, skip to *Operational Check,* page 1-8. If the control had not previously been set up before installing the regulator, perform the following steps for basic operation: set voltage, bandwidth, time delay, resistive line compensation, reactive line compensation, regulator configuration, system line voltage, the P.T. ratio and the C.T. primary rating. Additional instructions are also available in Section 2, starting at page 2-1, for turning on and setting up the various accessories.

With the control now energized, the display should be showing "PASS." Be certain the control switch is in the OFF position. To gain access to the system for CHANGING parameters, depress the following keys to activate the security system:

FUNCTION, 99, ENTER
12121, ENTER

The security system is now activated for changing operational settings.

SET VOLTAGE — TO CHANGE:

KEYS TO DEPRESS	DISPLAY	DESCRIPTION
1, ENTER	01 120.0	This is the set voltage as shipped from the factory.
CHANGE	01 ---.-c	Enter the desired value, example: 122.2
1222, ENTER	01 122.2	The set voltage is now 122.2 volts.

BANDWIDTH — TO CHANGE:

KEYS TO DEPRESS	DISPLAY	DESCRIPTION
2, ENTER	02 2.0	This is the bandwidth as shipped from the factory.
CHANGE	02 -.-c	Enter the desired value. Example: 4.5
45, ENTER	02 4.5	The bandwidth is now 4.5 volts.

TIME DELAY — TO CHANGE:

KEYS TO DEPRESS	DISPLAY	DESCRIPTION
3, ENTER	03 30	This is the time delay as shipped from the factory.
CHANGE	03 ---c	Enter the desired value, example: 49
49, ENTER	03 49	The time delay is now 49 seconds.

LINE COMPENSATION, RESISTANCE — TO CHANGE:

KEYS TO DEPRESS	DISPLAY	DESCRIPTION
4, ENTER	04 0.0	This is the resistive compensation as shipped from the factory.
CHANGE	04 --.-c	Enter the desired value. Example: 8.5
85, ENTER	04 8.5	The resistive compensation is now 8.5 volts.

LINE COMPENSATION, REACTANCE — TO CHANGE:

KEYS TO DEPRESS	DISPLAY	DESCRIPTION
5, ENTER	05 0.0	This is the reactive compensation as shipped from the factory.
CHANGE	05 --.-c	Enter the desired value, example: 3.5
35, ENTER	05 3.5	The reactive compensation is now 3.5 volts.

REGULATOR CONFIGURATION

The CL-4C Control is set at the factory for connection to single-phase systems or "wye" connected three-phase systems. If the regulator is installed on a delta system, it must be determined whether the regulator is leading or lagging, and then the proper code must be entered: 1 = delta lagging, or 2 = delta leading. Cooper Power Systems reference document R225-10-1 explains in detail the determination of the proper settings.

KEYS TO DEPRESS	DISPLAY	DESCRIPTION
FUNCTION, 41, ENTER	41 0	This is the regulator configuration as shipped from the factory.
CHANGE	41 -c	Enter the desired value. Example: 1
1, ENTER	41 1	The regulator configuration is now delta lagging.

SYSTEM LINE VOLTAGE

Regulators shipped from the factory are usually set for the rated voltage, and this value is entered into the control. If the regulator is installed on any other system voltage, this system voltage must be entered for proper operation.

KEYS TO DEPRESS	DISPLAY	DESCRIPTION
FUNCTION, 43, ENTER	43 7200	This is the system voltage for 7200V regulator.
CHANGE	43 ----C	Enter the desired value, example: 4800
4800, ENTER	43 4800	The system line voltage is now 4800 volts.

POTENTIAL TRANSFORMER RATIO

The ratio to be entered into the control is the OVERALL POT.RATIO, as shown on the regulator nameplate for every applicable system voltage for the particular regulator. The P.T. ratio which corresponds to the regulator rated voltage is set by the factory. If the regulator is installed on any other system voltage, the corresponding P.T. ratio **must** also be entered for proper operation.

KEYS TO DEPRESS	DISPLAY	DESCRIPTION
FUNCTION, 44, ENTER	44 60.0	This is the P.T. ratio for a 7620 volt reg. set to 7200 v.
CHANGE	44 ---.-C	Enter the desired value. Example: 40.0
400, ENTER	44 40.0	The P.T. ratio is now 40.0:1.

CURRENT TRANSFORMER PRIMARY RATING

The CL-4C is designed for 200 mA as the rated C.T. current, and will meter to 400 mA (200% load) with no loss of accuracy. Ratio correction is performed by the software, and, consequently, the C.T. primary rating must be entered. The C.T. primary rating is available on the regulator nameplate. **Example:** If a C.T. ratio of 250/0.2 is indicated on the nameplate, then 250 must be entered at Function Code 45. Table 2-5 on page 2-35 summarizes the C.T. primary ratings for all standard regulator ratings.

Perform the following steps to program the C.T. primary rating into the CL-4C Control:

KEYS TO DEPRESS	DISPLAY	DESCRIPTION
FUNCTION, 45, ENTER	45 200	This is the C.T. primary rating for a 200A regulator.
CHANGE	45 ----C	Enter the desired value, example: 250
250, ENTER	45 250	The C.T. primary rating is now 250 amps.

The CL-4C Regulator Control is now set for basic operation.

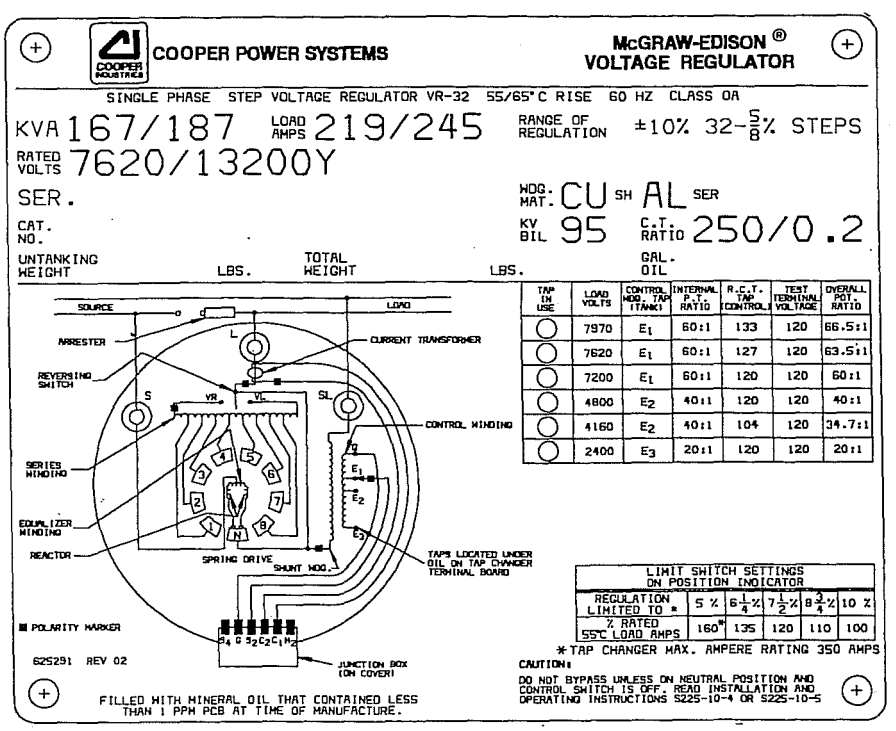

Figure 1-6
Nameplate.

Operational Check

NOTE: This operational check on the control should be used only with newly installed regulators. For regulators already on-line, use the operational check on page 2-3. With the CL-4C control now set for basic operation, an operational check should be performed as follows:

1. Depress the "8" key to display the COMPENSATED VOLTAGE.
2. Place the Control Switch in the MANUAL position.
3. Lift up on the RAISE switch to activate a raise operation.
4. Allow the tap changer to operate for five or six steps, or enough steps to take the voltage above the in-band voltage level.
5. Now place the Control Switch in the AUTO position. After the time delay period, the control should cause the regulator to step down to within the top band edge. (Example: 120V and a 2V B.W. = 121V top band edge). This should be shown in the display.
6. After the voltage is brought in-band and tap changing has stopped, move the Control Switch to the MANUAL position.
7. Press down on the LOWER switch to activate a lower operation.
8. Allow the tap changer to operate five or six steps, or enough steps to take the voltage below the in-band voltage level.
9. Now place the Control Switch in the AUTO position. After the time delay period, the control should cause the regulator to step up to within the lower band edge. (Example: 120V and a 2V B.W. = 119V lower band edge). This should be shown in the display.

This concludes the operational check of the CL-4C control and regulator.

FIELD CALIBRATION CHECK

If the operator also desires to check the calibration of the control, perform the steps listed below. NOTE: field calibration checks are only an **indication** of calibration, and are not nearly as precise as the procedure described in the CONTROL TROUBLE SHOOTING section of this manual, which is a laboratory process.

1. Connect an accurate true-RMS responding voltmeter (such as the Fluke 8026B, 8060A, or 8062A multimeters) to the VOLTMETER terminals.
2. The easiest and most direct way to perform a calibration check is to compare the voltage that the control "sees" to the voltage measured at the test terminals. This is accomplished by accessing the keypad and keying
   FUNCTION, 47, ENTER.
3. Under ideal conditions, the displayed voltage of the control will match the voltage of the voltmeter. Realistically, the voltages may be slightly different because:
   A) The CL-4C metering and operation is based upon the RMS value of the 60 Hz power line frequency. Thus, the metered values exclude the influences of harmonic voltages which are probably present on the line. A true-RMS meter however, will include these harmonic voltages in its calculation of the RMS voltage. This does **not** represent a problem with either metering device, since each device uses a different approach to metering.
   B) The calibration of the voltmeter being used for measurement is probably not exact. Even a very good meter with a basic accuracy of 0.5% could be in error by as much as 0.6V (out of 120V), and still be considered to be "in-calibration." The CL-4C control is calibrated using a conditioned power supply and reference voltmeters which are periodically calibration checked, traceable to the National Bureau of Standards.

NOTE: The CL-4C control is designed to perform ratio correction in software. Through the use of the ratio correcting transformer (RCT) located on the back panel, the voltage brought to the front panel is usually already corrected to the 120-volt base voltage. However, there are some ratings in which this voltage is not fully corrected by the RCT. Column 6 in Table 2-1, page 2-4 gives a general indication of these voltages, but **always** refer to the nameplate which provides the specific information for the particular regulator.

The voltage displayed at Function Code 8 (compensated voltage) is the voltage which the control is regulating. This value takes into consideration the software ratio correction and any line drop compensation being used. Additionally, if the regulator is equipped for reverse power operation, the voltage displayed at Function Code 8 will be correct even during reverse power conditions. The voltage measured at the test terminals, however, will reflect the input (SOURCE) voltage instead of the output (LOAD) voltage.

REMOVAL FROM SERVICE

Determining Neutral Position

> **⚠ WARNING:**
> Closing the bypass switch with the tap changer off neutral will short circuit part of the series winding. Before closing the bypass switch, the regulator must be on NEUTRAL and the control switch set to OFF.

Return the regulator to neutral. The regulator can be safely removed from service without interrupting load continuity only on the neutral position. It is wise to employ more than one method to determine whether a regulator is on neutral.

To Return The Regulator To Neutral

1. Use the control to RAISE or LOWER the regulator until it is in the neutral position.
2. When on NEUTRAL, the NEUTRAL LAMP will light and the POSITION INDICATOR will point to zero.
3. To stop the regulator on the neutral position, the CONTROL switch should be turned to OFF during the switching operation from position "1" to position zero. Switching to OFF prior to reaching the neutral position prevents overshoot.
4. **The POSITION INDICATOR and NEUTRAL LIGHT MUST BOTH indicate neutral.**

> **⚠ WARNING:**
> A regulator should be bypassed with the line energized ONLY if BOTH the position indicator AND the neutral light indicate NEUTRAL. If both do not indicate NEUTRAL, the line should be de-energized to avoid shorting part of the series winding.

> **⚠ WARNING:**
> Always use the CONTROL switch (labeled AUTO/REMOTE-OFF-MANUAL) to operate the regulator, not the POWER switch. Failure to do so may result in the tap changer stepping off of neutral immediately upon being energized.

De-energizing The Regulator

Once it has been established that the regulator is on neutral, immediately proceed with the following steps:

1. Turn the CONTROL switch to OFF.
2. Turn the control POWER switch to OFF.
3. Open the V_1 knife switch (and V_6 if present) on the back panel (Figure 1-5).
4. Remove the 6A motor fuse.
5. Close the BYPASS switch.
6. Open the SOURCE(S) disconnect switch.
7. Open the LOAD (L) disconnect switch.
8. Open the SOURCE-LOAD (SL) disconnect switch. (Delta application only.)

Note: If a regulator bypass disconnect is used in place of three separate switches, steps 5, 6, and 7 are carried out in one operation.

MAINTENANCE PROGRAM

Periodic Inspections

Step-type voltage regulators are designed to provide many years of trouble-free operation. Proper operation of the regulator can be checked without removing the unit from service. Using the manual mode of operation, run the regulator several steps in the raise direction, and then turn the control back to auto. After the time delay programmed into the control expires, the regulator should return within bandwidth (which will normally be the same position you started from, unless the incoming voltage is currently varying). When this has been completed, use the manual mode of operation to run the regulator several steps in the lower direction, and then turn the control back to auto. After the time delay, the regulator should return back within bandwidth.

If the regulator will not operate properly, a substitute control can be tried before removing the unit from service. Refer to the following sections for proper procedures on removing and replacing the CL-4C Control.

Since the usable life of a regulator is affected by its application, it may be desirable to periodically remove the regulator from service and untank the unit to verify contact wear, oil dielectric, etc. The time for this will vary, depending on a specific user's past experience.

Removal of CL-4C Front Panel

The CL-4C front panel may be removed from the regulator with the regulator energized.

To open the front panel, unscrew the captive knurled knobs on the left side of the panel. This allows the control to swing open on its hinges. With the control open, the back panel is readily accessible. The design of the control enclosure, back panel, and front panel enable easy replacement of the front panel, leaving the back panel, control enclosure, and cable intact. To remove the front panel, proceed as follows:

1. Push closed the current shorting switch, C. This shorts out the secondary of the regulator CT.

⚠ WARNING:
Push the C shorting switch closed before attempting to remove the fanning strip. Failure to do so will open the regulator CT circuit and may produce a flashover in the control.

2. Pull open the disconnect switch, V_1, (and V_6 if present). This de-energizes the CL-4C front panel.
3. Loosen the screws on the interconnecting terminal strip (TB2) at the bottom of the back panel.
4. Pull the fanning strip free from the terminal strip.
5. Disconnect the front panel ground lead from the back panel.

The CL-4C can now be lifted off its hinges. Care should be taken to prevent damage to a CL-4C front panel while in transit and/or storage.

Replacement of CL-4C Front Panel

To replace a CL-4C front panel in the control enclosure, follow the procedure outlined below:

1. Engage the front panel on the enclosure hinges.
2. Connect the front panel ground lead to the back panel.
3. Insert the fanning strip from the front panel wiring harness under the TB2 terminal block screws.
4. Tighten the screws on the interconnecting terminal block.
5. Push closed the disconnect switch, V_1, (and V_6 if present.)
6. Pull open the current shorting switch, C.

⚠ WARNING:
Do not pull open the current shorting switch, C, until the screws have been tightened on the interconnecting terminal block. Failure to do so could open the regulator CT secondary causing a flashover in the control.

7. Close the panel and tighten panel locking screws.

Untanking The Regulator

1. Manually run the tap changer to neutral, if possible. If not possible, note position indicator reading before proceeding to untank.
2. Remove the two mounting bolts holding the control cabinet to tank.
3. Remove the series arrester. Release internal pressure using the pressure relief device on the side of the regulator.
4. Free cover by removing clamping ring or cover bolts.
5. Attach sling or hooks with spreader bar (Figure 1-7) to lifting eyes and raise the cover, with the attached core-and-coil assembly, until the top of the coil is approximately one inch under oil. The control cabinet should be guided to avoid snagging during lifting.

⚠ CAUTION:
Before untanking a fan-cooled regulator, (1) lower the oil level below the thermometer, then (2) remove the thermometer well. Failure to do so will result in damage to the thermometer well and/or spillage of oil when the internal assembly is lifted.

It is recommended that the main core-and-coil assembly never be removed from the oil, except when a winding failure occurs. Blocking between the cover and tank lip should be employed to suspend the core-and-coil assembly within the oil until inspection of the tap changer or other maintenance is complete.

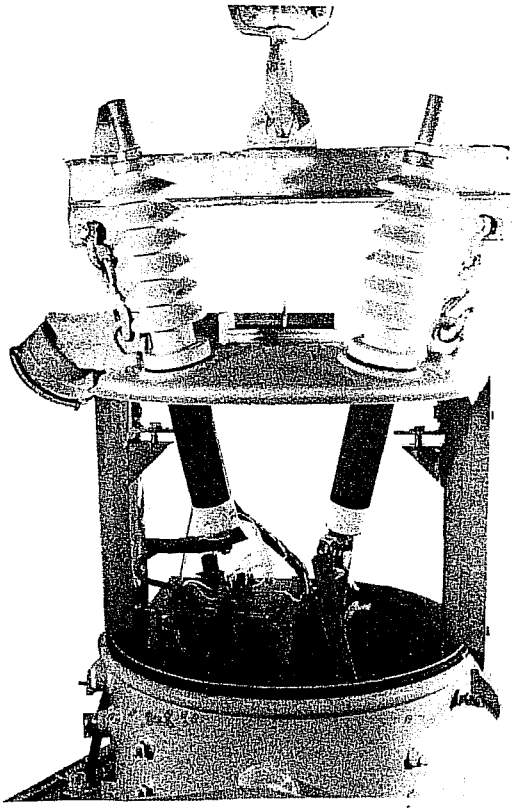

Figure 1-7
Untanking.

Retanking The Regulator

Retank the regulator as follows:

1. Be sure the position indicator shows the present position of the tap changer. If not, remove the indicator cable in the junction box from the position indicator shaft after loosening the set screw. Rotate the indicator shaft until the proper position is reached, then tighten the set screw. Verify coordination of position indicator with tap changer in neutral position (control neutral light on).
2. Check the gasket seat surfaces on the cover and tank, and wipe clean. Wipe the gasket and position it on the tank lip. Loosen horizontal side channel bolts to insure proper seating of regulator in tank and cover seal.
3. Raise the cover assembly and attached components over the tank. Make certain of proper orientation.
4. Lower the unit, positioning the channels in the tank guides. Guide the control cabinet onto its brackets.
5. Seat the unit in the tank. Tighten the cover clamps or bolts and replace the control mounting bolts.
   NOTE: Tap the cover with a rubber hammer around the edge to properly seal the gasket while tightening the cover band.
6. Check and retighten horizontal side channel bolts through handhole, if required.

Maintenance

The following is the recommended maintenance program for a regulator that has been untanked:

1. Check all connections for tightness.
2. Check all contacts for wear (refer to *S225-10-2*).
3. Avoid removing the main core-and-coil assembly from the oil, except when a winding failure occurs. Blocking between the cover and tank lip should be employed to suspend the core-and-coil assembly within the oil until inspection of the tap changer or other maintenance is complete.

⚠ WARNING:
When the internal assembly is lifted for inspection or maintenance, blocking should be placed between the cover and the top of the tank to keep the assembly from falling should lifting apparatus fail.

If it is necessary to remove the main core-and-coil assembly from the oil, the following steps should be followed.

A. The tap changer must not be subjected to temperatures above 66°C. (150°F). It must be removed if the unit is baked at higher temperatures.
B. If the unit is out of oil more than four hours, it must be rebaked for a minimum of 24 hours at 100°C (212°F). The maximum number of times a unit should be rebaked is twice.
C. Within four hours after bake, the unit should be retanked and filled with oil.
D. It is recommended that a vacuum be pulled on the unit for at least one hour (2 mm. of vacuum or better) after the unit is completely refilled with oil. If vacuum processing is not available, allow the entire internal assembly to soak in the oil for at least five days before energizing.
E. Do not test the unit until either the vacuum processing or the soaking has been completed.

4. Consider upgrading controls to latest design.

CONSTRUCTION

Surge Protection

SERIES SURGE ARRESTER

All VR-32 regulators are equipped with a bypass arrester connected across the series winding between the source (S) and load (L) bushings. This bypass arrester limits the voltage developed across the series winding during lightning strikes, switching surges, and line faults. The series surge arrester can be seen in Figure 1-2. A MOV-type series surge arrester of 2.2 kV offers series winding protection on all regulators except those rated over 14,400 volts which have a 3/4.5-kV MOV-type series surge arrester.

SHUNT ARRESTERS

A shunt arrester is an optional accessory on the VR-32 regulator for protection of the shunt winding. The shunt arrester is a direct-connected arrester mounted on the tank and connected between the "L" bushing and ground. For additional protection a shunt arrester may also be installed between the S (source) bushing and ground.

For best results, locate these arresters on the mounting pads provided on the tank near the bushing. Ground the arrester and the regulator tank to the same ground connection using the shortest cable possible. Shunt arrester application data is listed in Table 1-1.

Table 1-1
Shunt Arrester Application Data.

Regulator Voltage Rating	Nominal System Voltages (volts)		Recommended MOV Shunt Arrester Ratings (kV)
	Delta or Single-Phase	Multi-Grounded Wye	
2500/4330Y	2400 2500	2400/4160 2500/4330	3
5000/8660Y	4160 4330 4800 5000	4160/7200 4330/7500 4800/8320 5000/8660	6
7620/13200Y	6900 7200 7620	6900/11950 7200/12470 7620/13200	9
	7970		
		7970/13800	10
13800	12000 12470 13200 13800 14400		15
14400/24940Y		13800/23900 14400/24940	18
19920/34500GrdY		19920/34500	27

Position Indicator & ADD-AMP Capability

The position indicator (Figure 1-8) is mounted on a junction box on the cover of the regulator and is directly connected to the tap changer by a flexible drive shaft passing through the junction box and terminal board via a sealing gland.

The indicator face is graduated in steps, numbered 1 through 16, on each side of zero, which designates neutral. Drag hands indicate the maximum and minimum positions attained during raise and lower operations. The drag hands are automatically reset around the position indicator hand by operating the drag hand reset switch on the control front panel.

Figure 1-8
Position Indicator.

The ADD-AMP feature of VR-32 regulators allows increased current capacity by reducing the regulation range. This is accomplished by setting limit switches in the position indicator to prevent the tap changer from traveling beyond a set position in either raise or lower directions. The limit switches have scales graduated in % regulation, and are adjustable to specific values of 5, 6¼, 7½, 8¾, and 10% regulation to alter the regulation range. The five possible load current ratings associated with the reduced regulation ranges are summarized in Table 1-2. At each setting a detent stop provides positive adjustment. Settings other than those with stops are not recommended. The raise and lower limits need not be the same value.

SETTING THE LIMIT SWITCHES

Before setting the limit switches, be sure the new settings will not conflict with the present tap changer position. Do not set the switches **below** the indicated tap changer position. For example, if the indicator hand is at step 12 and the change to be made is from plus or minus 10% (step 16) to plus or minus 5% (step 8), run the tap changer back to step 7 or less, manually. Then set the limit switches for plus or minus 5% regulation.

Limit switches should be set in anticipation of the maximum deviation of primary voltage. For example, on a circuit where 7200 volts is to be maintained, plus or minus 10% will permit voltages between 6480 and 7920 to be regulated effectively. For voltages outside of this range, the regulator will not be able to return the voltage to the preselected level, in this case 7200 volts. The tap changer will have stepped to the maximum tap position and will be unable to regulate further. Five % regulation would accommodate circuit voltages between 6840 and 7560, maintaining 7200 volts for all voltages in this range.

To set the limit switches, follow this two-step procedure:

1. Loosen the captive bezel securing screws and swing the bezel open.
2. Lift the limit switch adjustment lever free of the detent and slide it to the new setting allowing the lever to snap into the detent stop.

Table 1-2
ADD-AMP Capabilities.

Rated Volts	Rated kVA	Load Current Ratings (amps)				
		Regulation Range				
		±10%**	±8¾%	±7½%	±6¼%	± 5%
2500	25	100/112	110	120	135	160
	50	200/224	220	240	270	320
	75	300/336	330	360	405	480
	100	400/448	440	480	540	640
	125	500/560	550	600	668	668
	167	668	668	668	668	668
	250	1000/1120	1000	1000	1000	1000
	333	1332/1492	1332	1332	1332	1332
	416.3	1665/1865	1665	1665	1665	1665
5000	25	50/56	55	60	68	80
	50	100/112	110	120	135	160
	100	200/224	220	240	270	320
	125	250/280	275	300	338	400
	167	334/374	367	401	451	534
	250	500/560	550	600	668	668
	333	668	668	668	668	668
	416.3	833/900	833	833	833	833
7620	38.1	50/56	55	60	68	80
	57.2	75/84	83	90	101	120
	76.2	100/112	110	120	135	160
	114.3	150/168	165	180	203	240
	167	219/245	241	263	296	350
	250	328/367	361	394	443	525
	333	438/491	482	526	591	668
	416.3	548/614	603	658	668	668
	500	656/668	668	668	668	668
	667	875/900	875	875	875	875
	833	1093/1224	1093	1093	1093	1093
13800	69	50/56	55	60	68	80
	138	100/112	110	120	135	160
	207	150/168	165	180	203	240
	276	200/224	220	240	270	320
	414	300/336	330	360	405	480
	500	362/405	398	434	489	579
	552	400/448	440	480	540	640
	667	483/541	531	580	652	668
	833	604/668	664	668	668	668
14400	72	50/56	55	60	68	80
	144	100/112	110	120	135	160
	288	200/224	220	240	270	320
	333	231/259	254	277	312	370
	416	289/324	318	347	390	462
	432	300/336	330	360	405	480
	500	347/389	382	416	468	555
	576	400/448	440	480	540	640
	667	463/519	509	556	625	668
	720	500/560	550	600	668	668
	833	578/647	636	668	668	668
19920	50	25.1/28	28	30	34	40
	100	50.2/56	55	60	68	80
	200	100.4/112	110	120	135	160
	333	167/187	184	200	225	267
	400	200.8/224	220	240	270	320
	500	250/280	275	300	338	400
	667	335/375	369	402	452	536
	833	418/468	460	502	564	668

**55/65°C rise rating on VR-32 regulators gives an additional 12% increase in capacity if the tap changer's maximum current rating has not been exceeded. For loading in excess of the above values please refer to the factory.

INTERNAL CONSTRUCTION & WIRING DIAGRAMS

The main core-and-coil assemblies are of the shell-form configuration. The series winding on the input (source) side of the regulator (Figure 1-9) allows all windings (control, shunt, and series) to be located in one coil. The load voltage is read directly by the control winding.

Regulators that have the series winding on the output (load) side (Figure 1-10) possess an identical coil configuration, but have a separate potential transformer in lieu of a control winding installed on the output side. This voltage is then applied to the sensing circuit of the control.

The control winding is wound on the core to obtain a supply voltage for the tap changer motor and the control sensing circuits. Taps are available on this winding for large-step voltage-ratio correction.

The shunt winding is wound over top of the control winding with the series winding wound over top of the shunt winding. Most regulators, depending upon the rating, have an equalizer winding. If applicable, the equalizer winding is wound on the outside of the coil over the series winding.

Figure 1-11 shows a regulator power circuit with a series transformer. This design is utilized when the load current rating exceeds the tap changer rating. Figure 1-12 shows the internal construction of this regulator. In this type of design, the series transformer winding losses are a function of the load alone and are independent of the tap position. Because of this, limiting the range of voltage regulation does not reduce losses and therefore, the ADD-AMP feature is not applicable.

The preventive auto or bridging reactor is a core-form design, consisting of a coil on each leg of the core. The inside half of one coil is connected to the outside half of the other coil and vice versa, providing equal current in each half of the reactor winding. This interlacing of the two coils reduces the interwinding leakage reactance to a very low value. The reactor is completely isolated from ground by stand-off insulators since the reactor coil is at line voltage above ground. The reactor core, core clamps, and other associated parts approach this level.

The current transformer is a toroid, through which the load current passes. It furnishes a current proportional to load current to the line-drop compensator circuit in the control and to optional metering packages.

The tap changer enables the regulator to provide regulation in smooth, accurately proportioned steps at a controlled speed that minimizes arcing and extends contact life. Four different tap changers are used throughout the line of regulator ratings. Figures 1-13 through 1-16 illustrate typical internal wiring schemes of the various types of regulator constructions. Most of the wiring is on the tap changer itself. Application, troubleshooting, and operation of the spring- and direct-drive tap changers and related components are covered extensively in *Service Manual S225-10-2*.

The terminal board inside the junction box on the cover connects the internal tank wiring to the position indicator and control. The junction box wiring is shown in Figure 4-1, page 4-2.

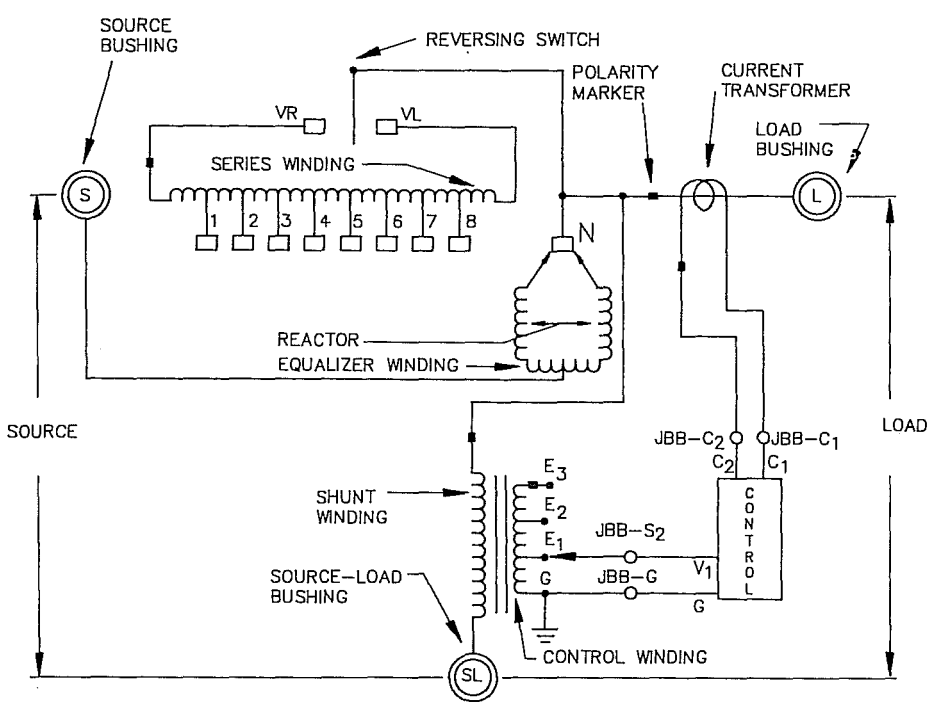

Figure 1-9
Power circuit - series winding located on the source-side.

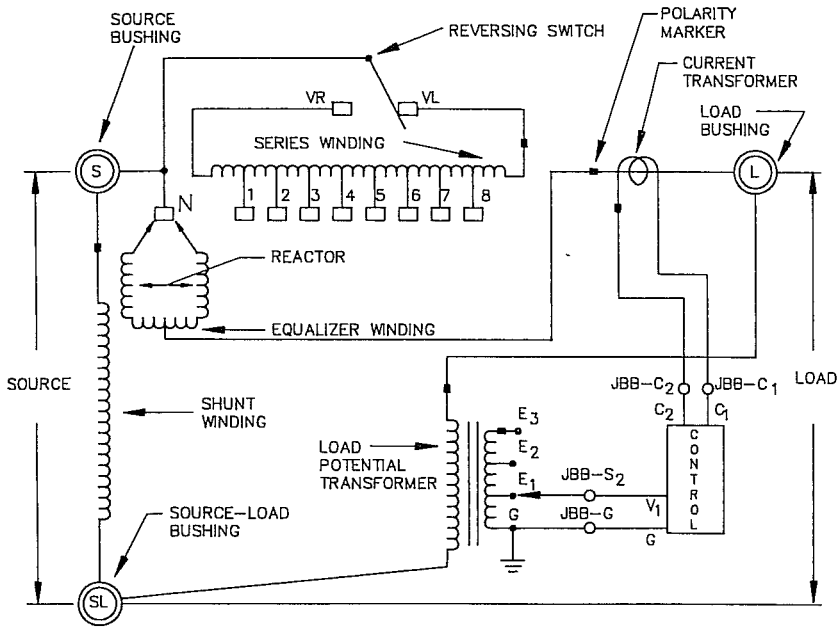

Figure 1-10
Power circuit-series winding located on the load-side.

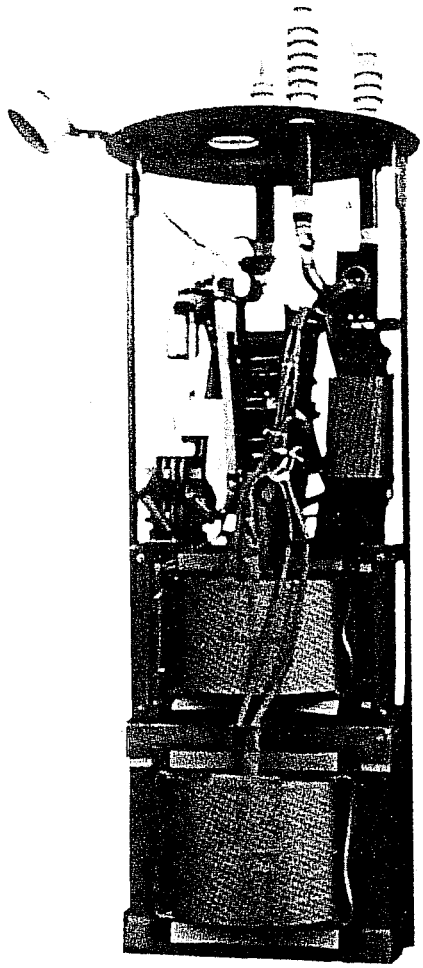

Figure 1-12
Series transformer design.

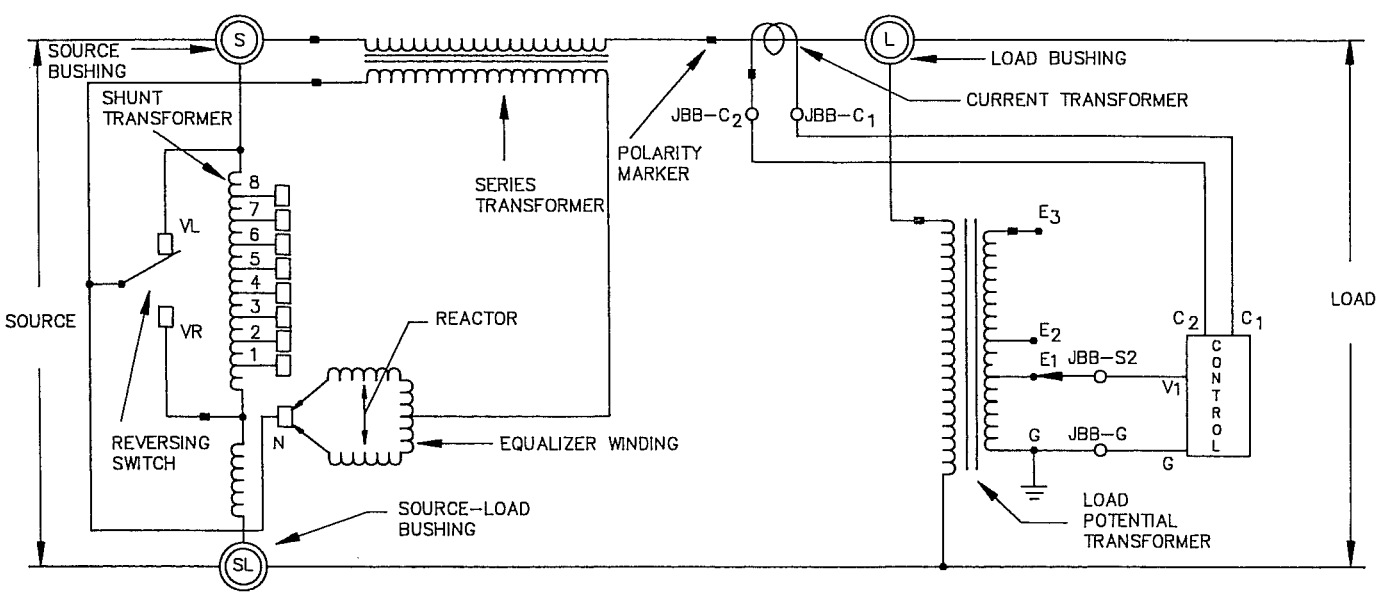

Figure 1-11
Power circuit-series transformer.

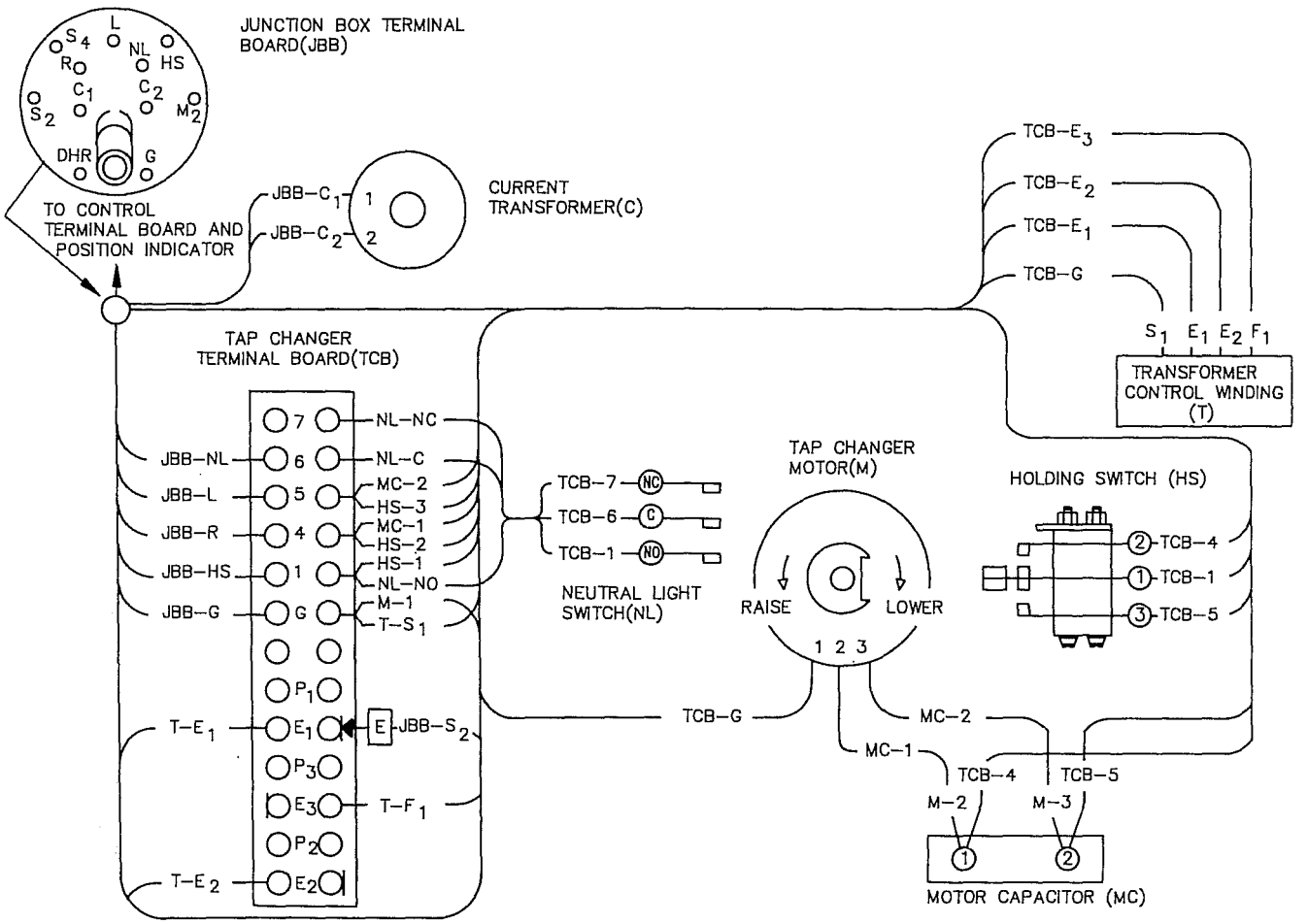

HS-1 — BLACK
HS-2 — BLUE
HS-3 — RED
JBB-C1 — WHITE
JBB-C2 — BLACK
JBB-G — WHITE
JBB-HS — ORANGE
JBB-L — GRN/BLK
JBB-NL — RED/BLK
JBB-R — BLUE
JBB-S_2 — WHITE

M-1 — WHITE
M-2 — BLUE
M-3 — RED
MC-1 — BLUE
MC-2 — RED
NL-C — WHITE
NL-NC — GREEN
NL-NO — ORANGE
T-E_1 — WHITE
T-E_2 — WHITE
T-F_1 — WHITE
T-S_1 — WHITE

TCB-1(HS) — BLACK
TCB-1(NL) — ORANGE
TCB-4 — BLUE
TCB-5 — RED
TCB-6 — WHITE
TCB-7 — GREEN
TCB-E_1 — WHITE
TCB-E_2 — WHITE
TCB-E_3 — WHITE
TCB-G — WHITE

Figure 1-13
Internal wiring of spring-drive regulator with series winding located on the source side.

VR-32 Regulator and CL-4C Control

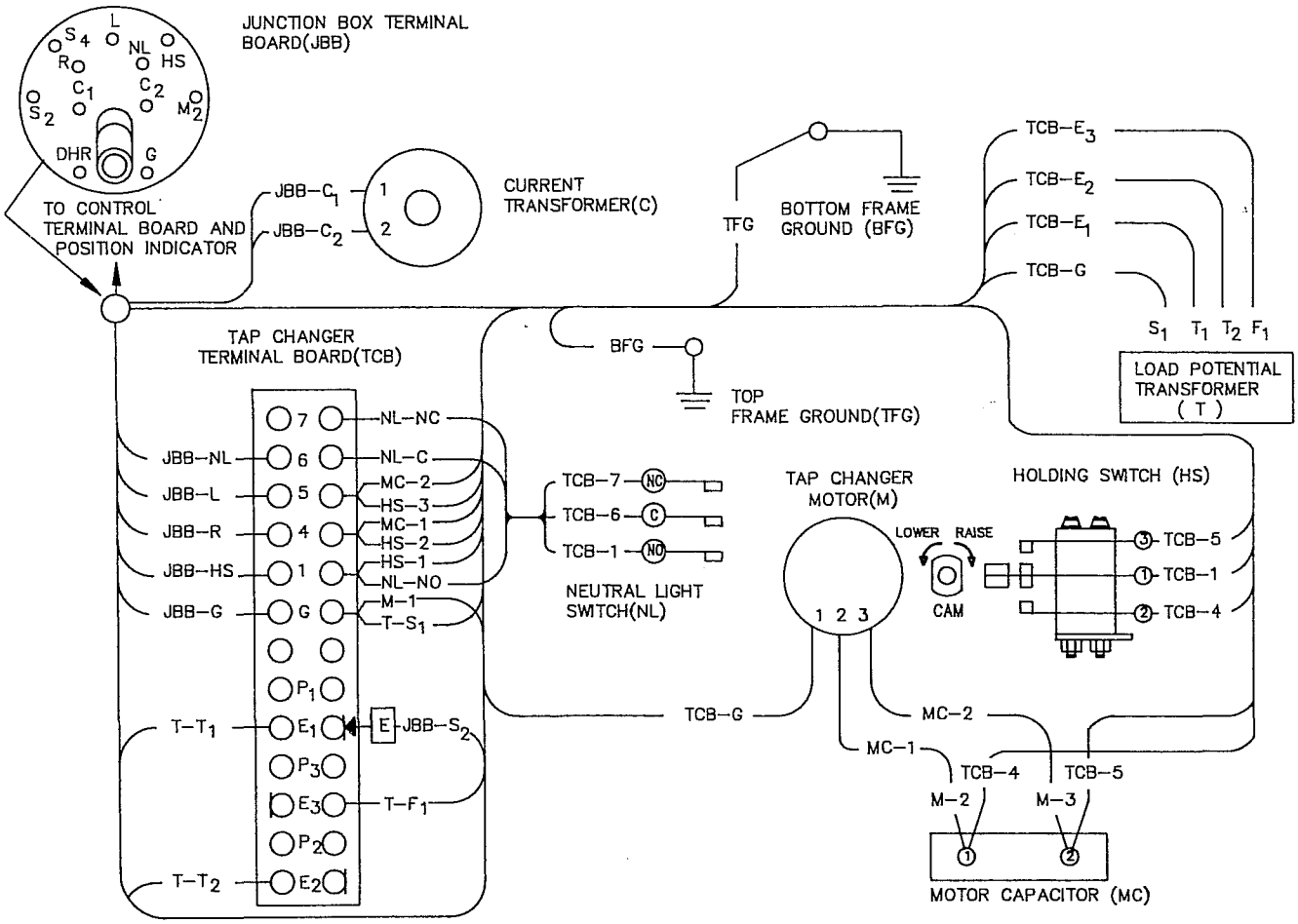

BFG — WHITE
HS-1 — BLACK
HS-2 — BLUE
HS-3 — RED
JBB-C1 — WHITE
JBB-C2 — BLACK
JBB-G — WHITE
JBB-HS — ORANGE
JBB-L — GRN/BLK
JBB-NL — RED/BLK
JBB-R — BLUE

$JBB\text{-}S_2$ — WHITE
M-1 — WHITE
M-2 — BLUE
M-3 — RED
MC-1 — BLUE
MC-2 — RED
NL-C — WHITE
NL-NC — GREEN
NL-NO — ORANGE
$T\text{-}T_1$ — WHITE
$T\text{-}T_2$ — WHITE
$T\text{-}F_1$ — WHITE

$T\text{-}S_1$ — WHITE
TCB-1(HS) — BLACK
TCB-1(NL) — ORANGE
TCB-4 — BLUE
TCB-5 — RED
TCB-6 — WHITE
TCB-7 — GREEN
$TCB\text{-}E_1$ — WHITE
$TCB\text{-}E_2$ — WHITE
$TCB\text{-}E_3$ — WHITE
TCB-G — WHITE
TFG — WHITE

Figure 1-14
Internal wiring of direct-drive regulator with series winding located on the load side.

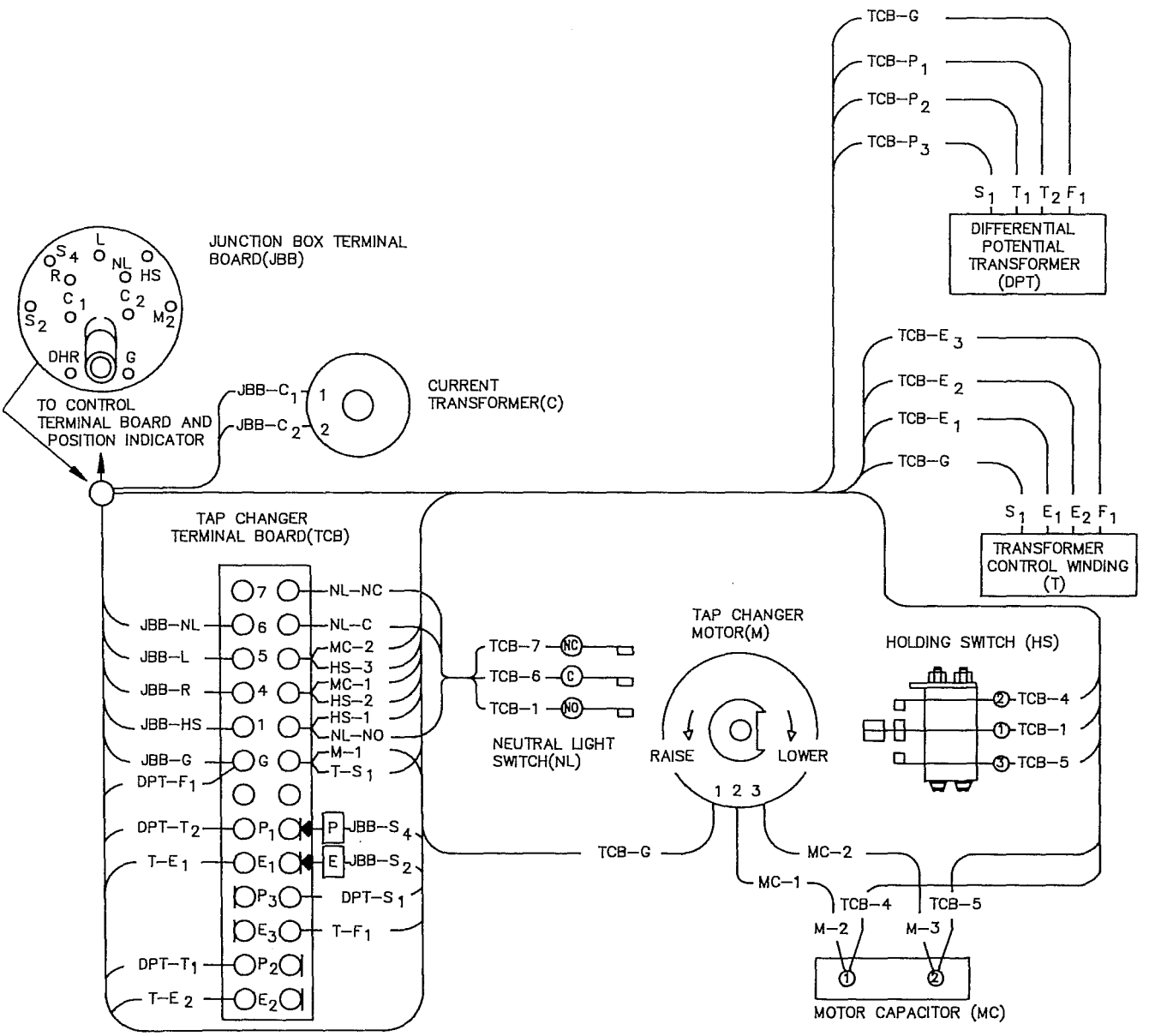

DPT-F_1 — WHITE
DPT-S_1 — WHITE
DPT-T_1 — WHITE
DPT-T_2 — WHITE
HS-1 — BLACK
HS-2 — BLUE
HS-3 — RED
JBB-C1 — WHITE
JBB-C2 — BLACK
JBB-DHR — ORG/BLK
JBB-G — WHITE
JBB-HS — ORANGE
JBB-L — GRN/BLK
JBB-NL — RED/BLK
JBB-R — BLUE
JBB-S_2 — WHITE
JBB-S_4 — WHITE
M-1 — WHITE
M-2 — BLUE
M-3 — RED
MC-1 — BLUE
MC-2 — RED
NL-C — WHITE
NL-NC — GREEN
NL-NO — ORANGE
T-F_1 — WHITE
T-T_1 — WHITE
T-T_2 — WHITE
T-S_1 — WHITE
TCB-1(HS) — BLACK
TCB-1(NL) — ORANGE
TCB-4 — BLUE
TCB-5 — RED
TCB-6 — WHITE
TCB-7 — GREEN
TCB-E_1 — WHITE
TCB-E_2 — WHITE
TCB-E_3 — WHITE
TCB-G — WHITE
TCB-P_1 — WHITE
TCB-P_2 — WHITE
TCB-P_3 — WHITE

Figure 1-15
Internal wiring of regulator with series winding on input side, with differential potential transformer.

VR-32 Regulator and CL-4C Control

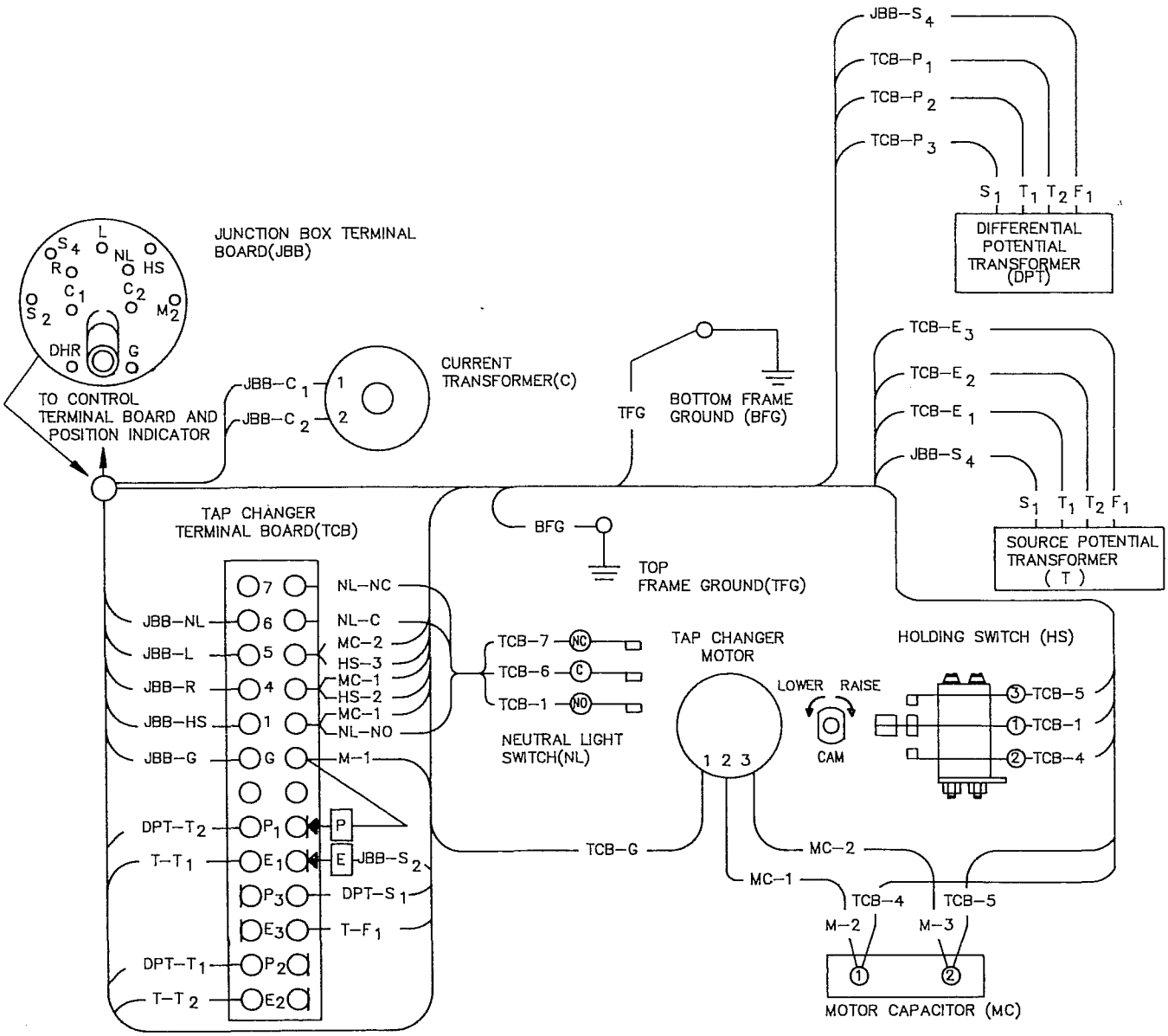

DPT-F_1 — WHITE
DPT-S_1 — WHITE
DPT-T_1 — WHITE
DPT-T_2 — WHITE
HS-1 — BLACK
HS-2 — BLUE
HS-3 — RED
JBB-C1 — WHITE
JBB-C2 — BLACK
JBB-DHR — ORG/BLK
JBB-G — WHITE
JBB-HS — ORANGE
JBB-L — GRN/BLK
JBB-NL — RED/BLK

JBB-R — BLUE
JBB-S_2 — WHITE
JBB-S_4 — WHITE
M-1 — WHITE
M-2 — BLUE
M-3 — RED
MC-1 — BLUE
MC-2 — RED
NL-C — WHITE
NL-NC — GREEN
NL-NO — ORANGE
T-F_1 — WHITE
T-T_1 — WHITE
T-T_2 — WHITE

T-S_1 — WHITE
TCB-1(HS) — BLACK
TCB-1(NL) — ORANGE
TCB-4 — BLUE
TCB-5 — RED
TCB-6 — WHITE
TCB-7 — GREEN
TCB-E_1 — WHITE
TCB-E_2 — WHITE
TCB-E_3 — WHITE
TCB-G — WHITE
TCB-P_1 — WHITE
TCB-P_2 — WHITE
TCB-P_3 — WHITE

Figure 1-16
Internal wiring of regulator with load winding on output side, with differential potential transformer.

JBB-G — WHITE
JBB-HS — ORANGE
RLS-1 — BLUE
LLS-1 — GREEN/BLACK
JBB-NL — RED/BLACK
JBB-DHR — ORANGE/BLACK
JBB-S_2 — BLACK
JBB-C_2 — GREEN
JBB-C_1 — RED
TB_2-HS — ORANGE
TB_8-1 — BLUE
TB_2-R_3 — BLUE
TB_2-L_3 — WHITE/GREEN
TB_8-3 — WHITE/GREEN
TB_2-NL — WHITE/RED
TB_2-DHR — WHITE/ORANGE
TB_2-V_S — BLACK
RCT_1-120 — BLACK
SD_1-1 — VIOLET
TB_2-C_3 — GREEN
RCT_2 — WHITE/BROWN
RCT_1 — BLACK
TB_7-V_6 — WHITE/BROWN
TB_7-V_1 — BLACK
PD_1-2 (V_6) — WHITE/BROWN
PD_1-2 (V_1) — BLACK
RCT_2-COM — WHITE
TB_1-C_2 — VIOLET
TB_2-C_1 — RED
RCT_1-COM — WHITE
TB_7-G — WHITE
TB_2-V_M — WHITE/BLACK
TB_1-V_4 — BLACK
PD_1-2 (RCT_2) — WHITE/BROWN
PD_1-2 (RCT_1) — BLACK
TB_8-4 — WHITE
TB_1-R_1 — BLUE
TB_1-L_1 — WHITE/GREEN
TB_2-G — WHITE
TB_2-B_R — WHITE/BLUE
TB_8-5 — WHITE/BLUE
TB_1-V_S — BLACK
RCT_1-127 — WHITE/BLACK
SD_1-2 — RED
TB_1-C_3 — GREEN
TB_1-H_S — ORANGE
TB_1-NL — WHITE/RED
TB_1-DHR — WHITE/ORANGE

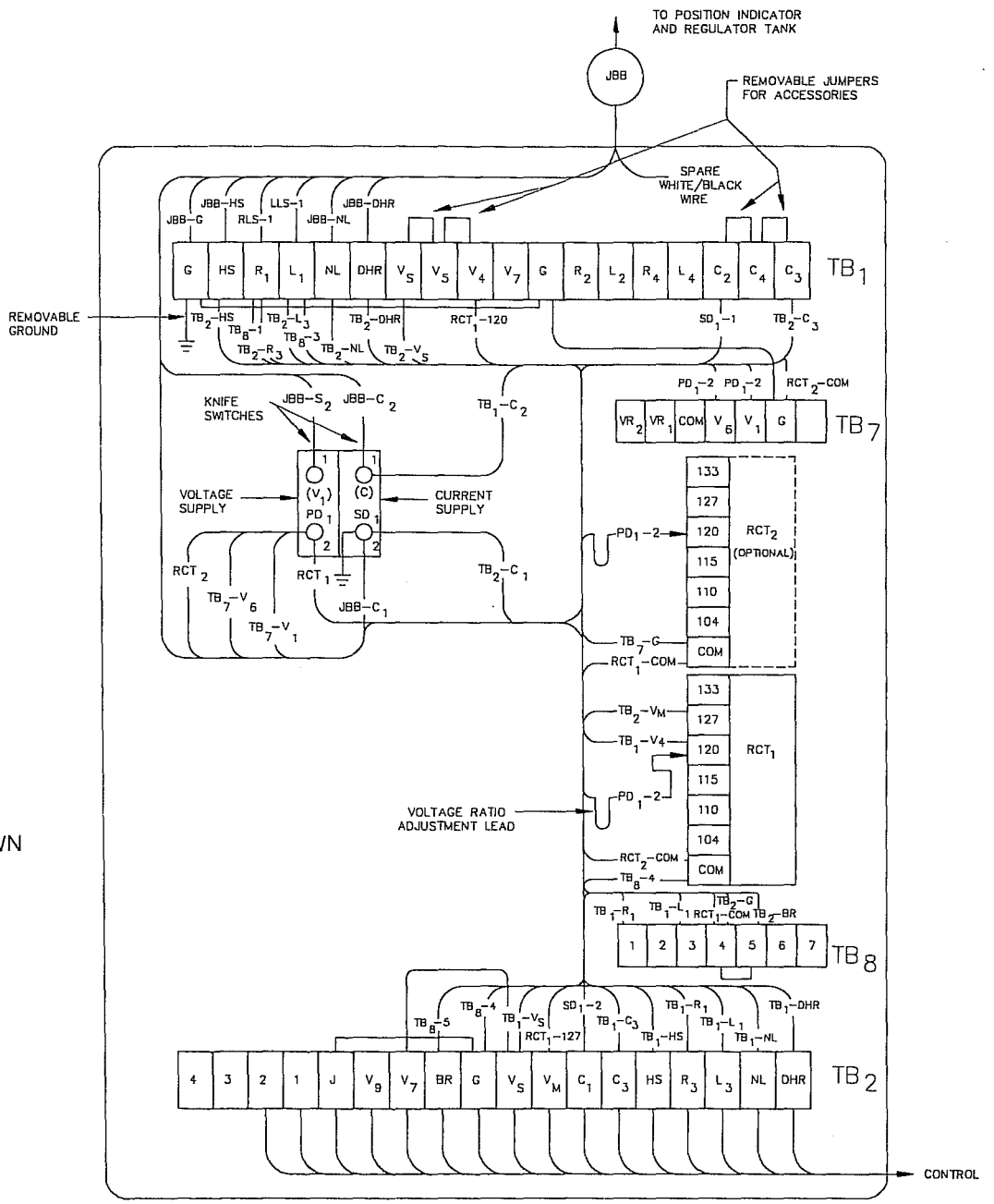

Figure 1-17
Back panel signal circuit.

VR-32 Regulator and CL-4C Control

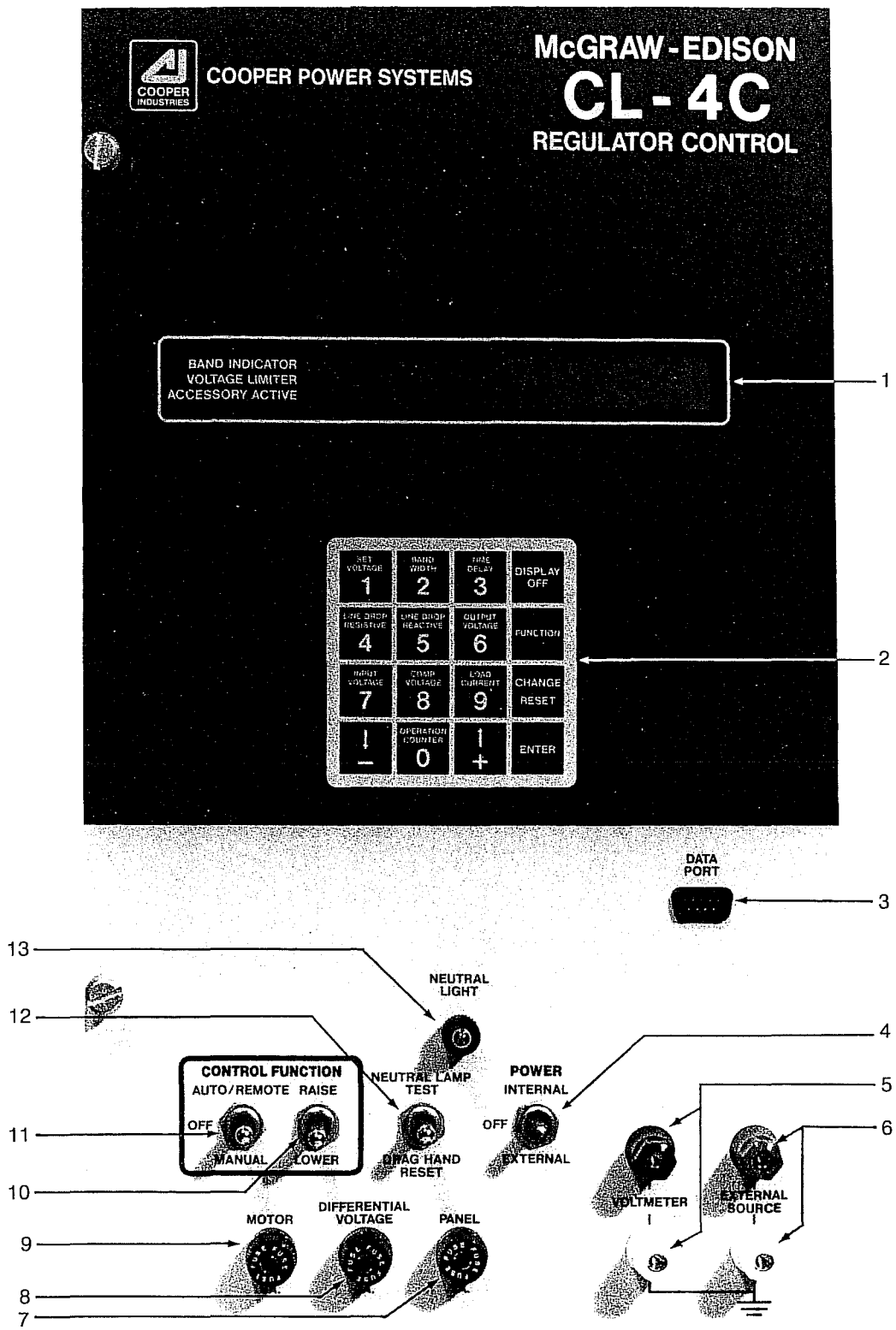

1. LCD Display
2. Keypad
3. Data Port
4. INTERNAL-EXTERNAL Power Switch
5. Voltmeter Terminals
6. External Power Terminals
7. Panel Fuse
8. Differential Voltage Fuse
9. Motor Fuse
10. Manual RAISE-LOWER Switch
11. AUTO/REMOTE-OFF-MANUAL Switch
12. Neutral Lamp Test-Drag Hand Reset Switch
13. Neutral Indicating Light

Figure 2-1
CL-4C front panel.

CL-4C REGULATOR CONTROL • Section 2
INTRODUCTION

The CL-4C Control

This section of the manual fully describes the capabilities of this control.

The CL-4C Control is a full-featured control which incorporates digital logic and microprocessor technology. The CL-4C Control utilizes a keypad to simplify the setup of the basic control and its many built-in accessory features. An LCD screen displays the control settings, accessory settings, metering values, and annunciator words.

The standard features of this control are:

Voltage Limiting.
Voltage Reduction (Local and Remote).
Reverse Power Flow Detection and Operation.
Metering.
Data Port.
Communications Capability.

The voltage limiting and voltage reduction features are enhanced beyond those of the CL-2A Control. The Reverse Power Flow feature not only detects reverse power flow, but provides the capability of operating in one of six different modes.

An extensive number of instantaneous and demand metering values, including instantaneous harmonic values, and maximum, minimum and present demand values can be displayed on the LCD screen. (Some reverse power flow operation modes and metering require an optional differential potential transformer.)

All control settings and metering values can be copied to an optional Data Reader through the CL-4C Data Port for transfer to a personal computer. This feature allows the CL-4C Control user to establish a data base of useful information.

An enhancement of the CL-4C Control over the CL-4B Control is its real-time communications capability. With the addition of two retrofittable circuit boards, any CL-4C can communicate digitally with a SCADA system.

The heart of the CL-4C Control is a Motorola MC68HC11, 8-bit microcomputer. This powerful processor also contains 512 bytes of electrically erasable and programmable read-only memory (EEPROM). The demand values and control settings are stored in this special memory to prevent their loss during a power outage. Information stored in the EEPROM will be retained indefinitely, with or without power applied.

To fully capitalize on the microprocessor capabilities, a 12-bit analog-to-digital converter is used in the front end of the design to convert the analog voltage and current waveforms into digital signals. A digital signal processing technique called Discrete Fourier Analysis is then performed on this data, permitting extremely accurate resolution of both the voltage and current input signals. It is the power of this technique which enables the CL-4C Control to do harmonic analysis (to the 11th harmonic frequency), as well as measurements for metering and control.

PRE-INSTALLATION OPERATIONAL CHECK

The CL-4C Control has the facilities for either manual or automatic operation of the tap changer, with either the internal source of power (the regulator), or an external source. To perform an operational check of the control before installing the regulator, follow these steps:

A. Connect the three high-voltage bushings together and ground them.
B. Place the POWER switch in the OFF position, and the CONTROL switch in the OFF position.
C. Connect a variable 120-volt 50/60 Hz source to the EXTERNAL SOURCE terminals. The grounded side of the external source **must** connect to the ground (white) terminal on the control.
D. Place the POWER switch in the EXTERNAL position.
E. Move the CONTROL switch to MANUAL, and depress and hold the RAISE-LOWER momentary toggle switch. Allow the tap changer to operate to 16L, the 10% buck position.
F. Hold up on the RAISE-LOWER momentary toggle switch. Allow the tap changer to operate to 16R, the 10% boost position.
G. Now place the Control switch in the AUTO/REMOTE position.
H. Adjust the variable voltage source so the applied voltage is at least 5 volts above the control voltage setting. Note that the "HIGH" band annunciator in the display will come on. After the time delay period, the control will issue "LOWER" tap change signals. Check to ensure that the operations counter is registering tap changes by pressing the "0" key on the keypad. Permit the tap changer to operate for approximately eight to ten steps.

SPECIFICATIONS

A. Physical size	10¼"W 17½"H 2½"D
B. Weight	11½ lbs
C. Burden @ 120 V	4 VA
D. Operating Temperature Range	- 40°C to +85°C
E. Control System Accuracy	ANSI C57.15 Class I

F. Metering Accuracy

VOLTAGE INPUTS (2) - Output Voltage and Differential/Source Voltage
80-170 volts a.c., 45 to 65 Hz, with error not to exceed 0.5%* of the reading under all conditions. The CL-4C Control will withstand up to 170 volts without damage or loss of calibration.

CURRENT INPUT
0 - 0.400 amps a.c., 45 to 65 Hz, with error not to exceed 0.6% (0.0012 amps)* of the nominal full load current (0.200 amps), under all conditions. The CL-4C Control will withstand the short-circuit rating of the regulator without damage or loss of calibration.

CALCULATED VALUES - kVA, kW, kVAR
0-9999, with error not to exceed 1%* under all conditions.

HARMONIC ANALYSIS - Current and Voltage Harmonics
3, 5, 7, 9, 11th harmonic frequencies, with error not to exceed 5%* under all conditions.

*Basic accuracy of the device, excluding P.T. and C.T. errors.

I. Adjust the variable voltage source so the applied voltage is at least 5 volts below the control voltage setting. Note that the "LOW" band annunciator in the display will come on. After the time delay period, the control will issue "RAISE" tap change signals. Check to ensure that the operations counter is registering tap changes.
J. Place the CONTROL switch in the MANUAL position and manually return the tap changer to NEUTRAL. When on NEUTRAL, the NEUTRAL LAMP will light and the position indicator will point to zero.
K. Place the CONTROL switch in the OFF position.
L. Press down on the momentary toggle switch labeled DRAG-HAND RESET, and the position indicator drag hands will reset to neutral.
M. Turn the POWER switch to OFF and disconnect the power supply from the EXTERNAL SOURCE terminals.
N. Remove the shorting connection from the high-voltage bushings and disconnect the ground.

IN-SERVICE OPERATIONAL CHECK

The operation and calibration of the CL-4C Control can be checked while the regulator is in service. However, the user must understand that field calibration checks are only an **indication** of calibration, and are not nearly as precise as the procedure described in the CONTROL TROUBLE SHOOTING SECTION, page 4-1 which is a laboratory process.

The CL-4C Control is also communications capable. Two additional boards are needed to use this function. This communications feature will allow the user to perform virtually any function remotely which might otherwise be done locally at the regulator front panel.

If you ARE NOT using the communications capability, skip to Step D. If you ARE using the communications capability, begin at Step A.

A. To temporarily disconnect the control from SCADA, flip off the toggle switch located on the lower left of the back panel.
B. To determine if automatic operation has been inhibited by SCADA, look at Function Code 69, Regulation Blocking Status. The codes are as follows:
   0 = Normal Automatic Operation
   1 = Automatic Operation Inhibited
   NOTE: If automatic operation is inhibited, record the last position of the tap changer.
C. If automatic operation is inhibited, access security level 2 (see page 2-32). When in security level 2, press FUNCTION, 69, ENTER. Now, press CHANGE-RESET and type 0. You are now in the normal automatic operation and can continue as directed in instructions.
D. Connect an accurate true RMS-responding voltmeter (such as the Fluke 8026B, 8060A, or 8062A multimeters) to the VOLTMETER terminals.
E. The easiest and most direct way to perform a calibration check is to compare the voltage that the control "sees" to the voltage measured at the test terminals. This is accomplished by accessing the keypad and keying FUNCTION, 47, ENTER. The voltage displayed is the voltage at the test terminals.

   NOTE: The CL-4C Control is designed to perform ratio correction in software. Through the use of the ratio correcting transformer (RCT) located on the back panel, the voltage brought to the front panel is usually already corrected to the 120-volt base voltage. However, there are some ratings in which this voltage is not fully corrected by the RCT. Column 6 in Table 2-1 gives a general indication of these ratings, but **always** refer to the nameplate which provides the specific information for the particular regulator.

   The voltage displayed at Function Code 8 (compensated voltage) is the voltage which the control is regulating. This value takes into consideration the software ratio correction and any line drop compensation being used. Additionally, if the regulator is equipped for reverse power operation, the voltage displayed at Function Code 8 will be correct **even** during reverse power conditions. **The voltage measured at the test terminals, however, will reflect the input (SOURCE) voltage instead of the output (LOAD) voltage.**
F. Manually operate the regulator three or four steps above the in-band voltage level while monitoring the voltage at Function Code 8.
G. Place the CONTROL switch on AUTO. After the time delay period, the regulator should step down to within the top band edge. (Example: 120v and 2v band width = 121v top band edge.)
H. Manually operate the regulator three or four steps below the in-band voltage level, again while monitoring the voltage at Function Code 8.
I. Place the CONTROL switch on AUTO. After the time delay period, the regulator should step up to within the lower band edge. (Example: 120v and 2v band width = 119v lower band edge.)
J. To assure that none of the control settings have defaulted, the default counter Function Code 90 must be checked. This is accomplished by keying: FUNCTION, 90, ENTER. The number displayed should be zero. If any number other than zero is displayed, then all control settings will need to be examined to find the defaulted parameter, and when located, changed to its correct value. A defaulted parameter will indicate "d" on the display.
K. If you ARE NOT using the communications capability, you are finished with the in-service operation check. If you ARE using the communications capability, continue as directed.
L. If you changed the control from the automatic operation inhibited mode, you will need to change it back. To do this, press FUNCTION, 69, ENTER and type 1. You are now back in the automatic operation inhibit mode.
M. Place the tap changer back into the position you recorded earlier.
N. Flip the toggle switch located on the lower left of the back panel back on. You are now finished with the in-service operational check.

Table 2-1
VR-32 Tap Connections and Voltage Levels.

Regulator Voltage Rating	Nominal Single Phase Voltage	Ratio Adjusting Data			Test Terminal Voltage **	Overall Potential Ratio **
		Internal Tap*	PT Ratio	RCT Tap		
1	2	3	4	5	6	7
2500	2500	—	20:1	120	125	20:1
	2400	—		120	120	20:1
5000	5000	E1/P1	40:1	120	125	40:1
	4800	E1/P1		120	120	40:1
	4160	E1/P1		104	120	34.7:1
	2400	E2/P2	20:1	120	120	20:1
7620	7970	E1/P1	60:1	133	120	66.5:1
	7620	E1/P1		127	120	63.5:1
	7200	E1/P1		120	120	60:1
	4800	E2/P2	40:1	120	120	40:1
	4160	E2/P2		104	120	34.7:1
	2400	E3/P3	20:1	120	120	20:1
13800	13800	E1/P1	115:1	120	120	115:1
	13200	E1/P1		115	120	110.2:1
	12000	E1/P1		104	120	99.7:1
	7970	E2/P2	57.5:1	133	125	63.7:1
	7620	E2/P2		133	120	63.7:1
	7200	E2/P2		120	125	57.5:1
	6930	E2/P2		120	120.5	57.5:1
14400	14400	E1/P1	120:1	120	120	120:1
	13800	E1/P1		115	120	115:1
	13200	E1/P1		110	120	110:1
	12000	E1/P1		104	115	104:1
	7970	E2/P2	60:1	133	120	66.5:1
	7620	E2/P2		127	120	63.5:1
	7200	E2/P2		120	120	60:1
	6930	E2/P2		115	120.5	57.5:1
19920	19920	—	166:1	120	120	166:1
	17200	—	166:1	104	120	143.9:1

* P taps are used with E taps only on regulators where an internal potential transformer is used in conjunction with the control winding to provide voltage supplies to the control. See nameplate for verification of this type of control supply.

** Test Terminal voltage and overall potential ratio may vary slightly from one regulator to another. See the regulator nameplate for determining the exact values.

To calculate the appropriate voltage setting for system voltages other than that shown, the following formula can be used (along with Table 2-1):

$$\frac{\text{System Voltage}}{\text{Internal PT Ratio}} \times \frac{120}{\text{RCT Tap Voltage}} = \text{Control Voltage Setting}$$

As an example, consider a 13800V regulator installed on a 12470V system. The calculation is:

$$\frac{12470}{115\ \text{(From Table 2-1)}} \times \frac{120}{104\ \text{(From Table 2-1)}} = \text{125 Control Voltage Setting}$$

To calculate overall Potential Ratio (Function Code 44)

$$\frac{\text{System Voltage}}{\text{Control Voltage Setting}} = \frac{12470}{125} = 99.7$$

FUNCTION CODES

All of the parameters (control settings, accessory settings, metering values, etc.) have been assigned a Function Code number. The Function Codes are described in detail on pages 2-6 through 2-24, and will be found in numerical order. The Function Codes are listed in the table below.

METERING

The metering parameters have been assigned Function Codes 06 through 38. Each is described in detail, starting on page 2-6.

Table 2-2
Function Codes For CL-4C Control

FUNCTION CODE	FUNCTION
FORWARD CONTROL SETTINGS	
00	Operation Counter
01	Set Voltage (Forward)
02	Bandwidth (Forward)
03	Time Delay (Forward)
04	Line Compensation, Resistance (Forward)
05	Line Compensation, Reactance (Forward)
INSTANTANEOUS METERING	
06	Load Voltage, Secondary
07	Source Voltage, Secondary
08	Compensated Voltage, Secondary
09	Load Current, Primary
10	Load Voltage, Primary kV
11	Source Voltage, Primary kV
12	Percent Regulation
13	Power Factor
14	kVA Load
15	kW Load
16	kVAR Load
17	Line Frequency
18	Voltage Harmonics
19	Current Harmonics
FORWARD DEMAND METERING	
20	Load Voltage Demand (Forward)
21	Compensated Voltage Demand (Forward)
22	Load Current Demand (Forward)
23H	Power Factor @ Max kVA Demand (Forward)
23L	Power Factor @ Min kVA Demand (Forward)
24	kVA Load Demand (Forward)
25	kW Load Demand (Forward)
26	kVAR Load Demand (Forward)
27	Max % Boost [Min % Buck]
28	Max % Buck [Min % Boost]
REVERSE DEMAND METERING	
30	Load Voltage Demand (Reverse)
31	Compensated Voltage Demand (Reverse)
32	Load Current Demand (Reverse)
33H	Power Factor @ Max kVA Demand (Reverse)
33L	Power Factor @ Min kVA Demand (Reverse)
34	kVA Load Demand (Reverse)
35	kW Load Demand (Reverse)
36	kVAR Load Demand (Reverse)
38	**MASTER DEMAND RESET**
CONFIGURATION	
40	Regulator Identification
41	Regulator Configuration 0=Wye, 1=Delta Lag, 2=Delta Lead
42	Control Operating Mode 0=Sequential 1=Time Integrating, 2=Voltage Averaging
43	System Line Voltage
44	Potential Transformer Ratio
45	Current Transformer Primary Rating
46	Demand Time Interval
CALIBRATION	
47	Voltage Calibration
48	Current Calibration

FUNCTION CODE	FUNCTION
REVERSE CONTROL SETTINGS	
51	Set Voltage (Reverse)
52	Bandwidth (Reverse)
53	Time Delay (Reverse)
54	Line Compensation, Resistance (Reverse)
55	Line Compensation, Reactance (Reverse)
56	Reverse Sensing Mode 0=Locked Forward, 1=Locked Reverse, 2=Reverse Idle, 3=Bi-directional, 4=Neutral Idle, 5=Co-generation
57	Reverse Threshold generation
COMMUNICATIONS	
60	Data Port Baud Rate
61	Interface Port Baud Rate
62	Channel 1 Status
63	Channel 2 Status
64	Control Communications Address
65	Communications Port Baud Rate
66	Communications Port Handshake Mode
67	Communications Port Resynch Time Characters
68	Communications Port Transmit Enable Delay
69	**REGULATION BLOCKING STATUS**
VOLTAGE REDUCTION	
70	Voltage Reduction Mode 0=Off, 1=Local, 2=Remote 3=Automatic With Remote Override
71	% Voltage Reduction In Effect
72	Local Voltage Reduction %
73	Remote Reduction Setting #1
74	Remote Reduction Setting #2
75	Remote Reduction Setting #3
76	Automatic Reduction Setting #1
77	Automatic Reduction Setting #2
78	Percent Current For Automatic #1
79	Percent Current For Automatic #2
VOLTAGE LIMITER	
80	Voltage Limiting Mode 0=Off, 1=High Limit Active Only, 2=High and Low Limits Active
81	High Voltage Limit
82	Low Voltage Limit
WATCHDOG DIAGNOSTICS	
90	Number of Defaults
91	Self Test
93	Number of EEPROM Corrections
94	Number of Resets
95	System Status Code
SECURITY ACCESS	
96	Level 1 Security Code
97	Level 2 Security Code
98	Level 3 Security Code
99	Enter Security Code

FUNCTION CODE	FUNCTION CODE EXTENSION	PARAMETER	UNIT OF MEAS	SECURITY LEVEL			DEFAULT VALUE	KEY ENTRY LIMIT	
				TO READ	TO CHANGE	TO RESET		LOW	HIGH
00		**Operation Counter**		0	N.A.	N.A.	N.A.	N.A.	N.A.

- The operations counter is activated by detecting tap changer motor operation which is determined by sensing current flow in the holding switch circuit. This technique has been employed in all previous CL regulator control designs.
- The operations count is written into non-volatile memory after every ten (10) counts.
- In the event of a power outage, the count will round back to the nearest ten (10), and then add five (5) to obtain the restored count when power recovers.
  Example: Count 218; After Power Loss/Recovery = 215

FUNCTION CODE	FUNCTION CODE EXTENSION	PARAMETER	UNIT OF MEAS	SECURITY LEVEL			DEFAULT VALUE	KEY ENTRY LIMIT	
				TO READ	TO CHANGE	TO RESET		LOW	HIGH
01		**Set Voltage (Forward)**	v.	0	2	N.A.	120.0	100.0	135.0

- The set voltage is the voltage level to which the control will regulate, on the 120-volt base, during forward power flow.

FUNCTION CODE	FUNCTION CODE EXTENSION	PARAMETER	UNIT OF MEAS	SECURITY LEVEL			DEFAULT VALUE	KEY ENTRY LIMIT	
				TO READ	TO CHANGE	TO RESET		LOW	HIGH
02		**Bandwidth (Forward)**	v.	0	2	N.A.	2.0	1.0	6.0

- The bandwidth is defined as that total voltage range, around the voltage setting, which the control will consider as a satisfied (in-band) condition, during forward power flow.

FUNCTION CODE	FUNCTION CODE EXTENSION	PARAMETER	UNIT OF MEAS	SECURITY LEVEL			DEFAULT VALUE	KEY ENTRY LIMIT	
				TO READ	TO CHANGE	TO RESET		LOW	HIGH
03		**Time Delay (Forward)**	sec.	0	2	N.A.	30	5	180

- The time delay is the period of time (in seconds) that the control waits, from when the voltage first goes out-of-band, to when the relay closure occurs, during forward power flow.

FUNCTION CODE	FUNCTION CODE EXTENSION	PARAMETER	UNIT OF MEAS	SECURITY LEVEL			DEFAULT VALUE	KEY ENTRY LIMIT	
				TO READ	TO CHANGE	TO RESET		LOW	HIGH
04		**Line Compensation, Resistance (Forward)**	v.	0	2	N.A.	0.0	-24.0	24.0

- The resistive line drop compensation value is used to model the resistive line losses between the regulator and the theoretical load center.
- The CL-4C Control uses this parameter, in conjunction with the load current flow, to calculate the compensated voltage (displayed at Function Code 8) during forward power flow.

FUNCTION CODE	FUNCTION CODE EXTENSION	PARAMETER	UNIT OF MEAS	SECURITY LEVEL			DEFAULT VALUE	KEY ENTRY LIMIT	
				TO READ	TO CHANGE	TO RESET		LOW	HIGH
05		**Line Compensation, Reactance (Forward)**	v.	0	2	N.A.	0.0	-24.0	24.0

- The reactive line drop compensation value is used to model the reactive line losses between the regulator and the theoretical load center.
- The CL-4C Control uses this parameter, in conjunction with the load current flow, to calculate the compensated voltage (displayed at Function Code 8) during forward power flow.

FUNCTION CODE	FUNCTION CODE EXTENSION	PARAMETER	UNIT OF MEAS	SECURITY LEVEL			DEFAULT VALUE	KEY ENTRY LIMIT	
				TO READ	TO CHANGE	TO RESET		LOW	HIGH
06		**Load Voltage, Secondary**	v.	0	N.A.	N.A.	N.A.	N.A.	N.A.

- This is the fundamental RMS voltage, referred to the secondary, which appears at the output (load) terminals of the regulator.
- Since ratio correction is performed by the software, this parameter is scaled according to the inputs at Function Code 44 (PT Ratio) and Function Code 43 (System Line Voltage).

FUNCTION CODE	FUNCTION CODE EXTENSION	PARAMETER	UNIT OF MEAS	SECURITY LEVEL			DEFAULT VALUE	KEY ENTRY LIMIT	
				TO READ	TO CHANGE	TO RESET		LOW	HIGH
07		**Source Voltage, Secondary**	v.	0	N.A.	N.A.	N.A.	N.A.	N.A.

- This is the fundamental RMS voltage, referred to the secondary, which appears at the input (source) terminals of the regulator.
- Since ratio correction is performed by the software, this parameter is scaled according to the inputs at Function Code 44 (PT Ratio) and Function Code 43 (System Line Voltage).
- An optional differential or source voltage must be added to obtain this parameter. Lack of this voltage will result in this parameter displaying dashes. Refer to page 2-25.

FUNCTION CODE	FUNCTION CODE EXTENSION	PARAMETER	UNIT OF MEAS	SECURITY LEVEL			DEFAULT VALUE	KEY ENTRY LIMIT	
				TO READ	TO CHANGE	TO RESET		LOW	HIGH
08		**Compensated Voltage, Secondary**	v.	0	N.A.	N.A.	N.A.	N.A.	N.A.

- This is the calculated voltage at the load center, referred to the secondary.
- This is based upon the resistive compensation setting (Function Codes 4 or 54), reactive compensation setting (Function Codes 5 or 55), and the load current flow.
- This is the voltage that the regulator is regulating during either forward or reverse power flow.

FUNCTION CODE	FUNCTION CODE EXTENSION	PARAMETER	UNIT OF MEAS	SECURITY LEVEL			DEFAULT VALUE	KEY ENTRY LIMIT	
				TO READ	TO CHANGE	TO RESET		LOW	HIGH
09		**Load Current, Primary**	A.	0	N.A.	N.A.	N.A.	N.A.	N.A.

- This is the fundamental RMS current flowing in the primary circuit.
- This parameter is scaled according to the CT primary rating which is entered at Function Code 45.

FUNCTION CODE	FUNCTION CODE EXTENSION	PARAMETER	UNIT OF MEAS	SECURITY LEVEL			DEFAULT VALUE	KEY ENTRY LIMIT	
				TO READ	TO CHANGE	TO RESET		LOW	HIGH
10		**Load Voltage, Primary kV**	kV	0	N.A.	N.A.	N.A.	N.A.	N.A.

- This is the fundamental RMS voltage, referred to the primary, which appears at the output (load) terminals of the regulator.
- Since ratio correction is performed by the software, this parameter is scaled according to the inputs at Function Code 43 (System Line Voltage) and Function Code 44 (PT Ratio).

FUNCTION CODE	FUNCTION CODE EXTENSION	PARAMETER	UNIT OF MEAS	SECURITY LEVEL			DEFAULT VALUE	KEY ENTRY LIMIT	
				TO READ	TO CHANGE	TO RESET		LOW	HIGH
11		**Source Voltage, Primary kV**	kV	0	N.A.	N.A.	N.A.	N.A.	N.A.

- This is the fundamental RMS voltage, referred to the primary, which appears at the input (source) terminals of the regulator.
- Since ratio correction is performed by the software, this parameter is scaled according to the inputs at Function Code 43 (System Line Voltage) and Function Code 44 (PT Ratio).
- An optional differential or source voltage must be added to obtain this parameter. Lack of this voltage will result in this parameter displaying dashes. Refer to page 2-25.

FUNCTION CODE	FUNCTION CODE EXTENSION	PARAMETER	UNIT OF MEAS	SECURITY LEVEL			DEFAULT VALUE	KEY ENTRY LIMIT	
				TO READ	TO CHANGE	TO RESET		LOW	HIGH
12		**Percent Regulation**	%	0	N.A.	N.A.	N.A.	N.A.	N.A.

- This is the actual percentage that the regulator is actively boosting or bucking the input (source) voltage. This is calculated as follows:
  Percent Regulation = ([OUTPUT/INPUT] -1) X 100
- When the regulator output voltage is greater than the input voltage (that is, the regulator is boosting), the sign is implied (+). When the regulator output voltage is lower than the input voltage (that is, the regulator is bucking), the sign is (-).
- An optional differential or source voltage must be added to obtain this parameter. Lack of this voltage will result in this parameter displaying dashes. Refer to page 2-25.

FUNCTION CODE	FUNCTION CODE EXTENSION	PARAMETER	UNIT OF MEAS	SECURITY LEVEL			DEFAULT VALUE	KEY ENTRY LIMIT	
				TO READ	TO CHANGE	TO RESET		LOW	HIGH
13		**Power Factor**		0	N.A.	N.A.	N.A.	N.A.	N.A.

- This is the power factor of the primary circuit, as represented by the phase difference between the line current and voltage.
- Leading current, or capacitive loads, are designated by a (-) sign, and lagging current, or inductive loads, are designated by an implied (+) sign.

REVERSE POWER

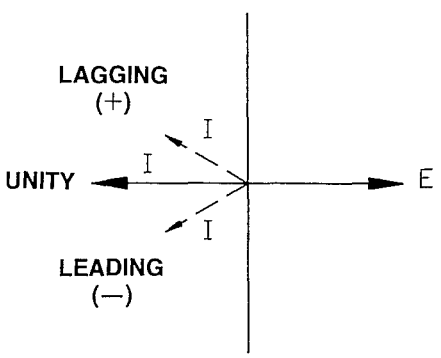

Figure 2-2
Reverse power vector diagram.

FORWARD POWER

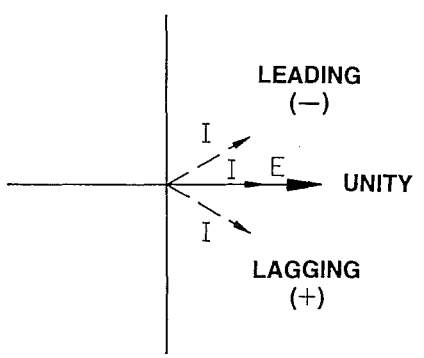

Figure 2-3
Forward power vector diagram.

FUNCTION CODE	FUNCTION CODE EXTENSION	PARAMETER	UNIT OF MEAS	SECURITY LEVEL			DEFAULT VALUE	KEY ENTRY LIMIT	
				TO READ	TO CHANGE	TO RESET		LOW	HIGH
14		**kVA Load**	kVA	0	N.A.	N.A.	N.A.	N.A.	N.A.

- This is the total kilovolt amperes drawn by the load, as calculated by the product of the primary kV (Function Code 10) times the primary load current (Function Code 9). See Figure 2-4.

FUNCTION CODE	FUNCTION CODE EXTENSION	PARAMETER	UNIT OF MEAS	SECURITY LEVEL			DEFAULT VALUE	KEY ENTRY LIMIT	
				TO READ	TO CHANGE	TO RESET		LOW	HIGH
15		**kW Load**	kW	0	N.A.	N.A.	N.A.	N.A.	N.A.

- This is the total kilowatts (true power) consumed by the load.
- This is calculated by the product of the power factor (Function Code 13) times the kVA load (Function Code 14). See Figure 2-4.

FUNCTION CODE	FUNCTION CODE EXTENSION	PARAMETER	UNIT OF MEAS	SECURITY LEVEL			DEFAULT VALUE	KEY ENTRY LIMIT	
				TO READ	TO CHANGE	TO RESET		LOW	HIGH
16		**kVAR Load**	kVAR	0	N.A.	N.A.	N.A.	N.A.	N.A.

- This is the total kilovolt amperes reactive (reactive power) drawn by the load.
- It is this reactive power which adds to losses on the line, yet does not do any work. See Figure 2-4.

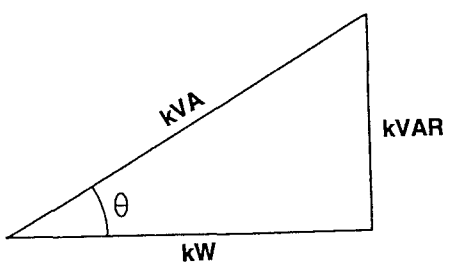

$$\text{POWER FACTOR} = \frac{\text{kW}}{\text{kVA}}$$

$$\text{kW} = \text{kVA} \cos \theta$$

$$\text{kVAR} = \text{kVA} \sin \theta$$

Figure 2-4
Power triangle.

FUNCTION CODE	FUNCTION CODE EXTENSION	PARAMETER	UNIT OF MEAS	SECURITY LEVEL			DEFAULT VALUE	KEY ENTRY LIMIT	
				TO READ	TO CHANGE	TO RESET		LOW	HIGH
17		**Line Frequency**	Hz	0	N.A.	N.A.	N.A.	N.A.	N.A.

- This is the frequency of the power line, as measured by the CL-4C Control.
- The CL-4C Control is capable of operating on systems from 45 to 65 Hz with no loss of accuracy in its measurements.

FUNCTION CODE	FUNCTION CODE EXTENSION	PARAMETER	UNIT OF MEAS	SECURITY LEVEL			DEFAULT VALUE	KEY ENTRY LIMIT	
				TO READ	TO CHANGE	TO RESET		LOW	HIGH
18	3,5,7,9,11	**Voltage Harmonics**	%	0	N.A.	N.A.	N.A.	N.A.	N.A.

- This is the harmonic content of the voltage waveform at the 3rd, 5th, 7th, 9th, and 11th harmonic frequencies.
- This is displayed as a percentage of the fundamental RMS voltage. **Example:** 120.0v of 60 Hz fundamental (power line frequency), with a reading of 0.5 at the 7th harmonic (420 Hz), is 0.6v RMS.

FUNCTION CODE	FUNCTION CODE EXTENSION	PARAMETER	UNIT OF MEAS	SECURITY LEVEL			DEFAULT VALUE	KEY ENTRY LIMIT	
				TO READ	TO CHANGE	TO RESET		LOW	HIGH
19	3,5,7,9,11	**Current Harmonics**	%	0	N.A.	N.A.	N.A.	N.A.	N.A.

- This is the harmonic content of the current waveform, at the 3rd, 5th, 7th, 9th, and 11th harmonic frequencies.
- This is displayed as a percentage of the fundamental RMS current. **Example:** 200A of 60Hz fundamental (power line frequency), with a reading of 1.9 at the 5th harmonic (300 Hz), is 3.8A RMS.

FUNCTION CODE	FUNCTION CODE EXTENSION	PARAMETER	UNIT OF MEAS	SECURITY LEVEL			DEFAULT VALUE	KEY ENTRY LIMIT	
				TO READ	TO CHANGE	TO RESET		LOW	HIGH
20	H, L, P	**Load Voltage Demand (Forward)**	v.	0	N.A.	1	Reset*	N.A.	N.A.

- This is the secondary output voltage of the regulator, as a demand value, according to the demand time interval at Function Code 46.
- H = maximum value since last reset, L = minimum value since last reset, and P = present value.
- Scroll to the "L" and "P" values.

FUNCTION CODE	FUNCTION CODE EXTENSION	PARAMETER	UNIT OF MEAS	SECURITY LEVEL			DEFAULT VALUE	KEY ENTRY LIMIT	
				TO READ	TO CHANGE	TO RESET		LOW	HIGH
21	H, L, P	**Compensated Voltage Demand (Forward)**	v.	0	N.A.	1	Reset*	N.A.	N.A.

- This is the calculated secondary voltage at the load center, as a demand value, according to the demand time interval at Function Code 46.
- The line compensation settings for resistance and reactance (Function Codes 4 and 5) are used in this calculation.
- H = maximum value since last reset, L = minimum value since last reset, and P = present value.
- Scroll to the "L" and "P" values.

FUNCTION CODE	FUNCTION CODE EXTENSION	PARAMETER	UNIT OF MEAS	SECURITY LEVEL			DEFAULT VALUE	KEY ENTRY LIMIT	
				TO READ	TO CHANGE	TO RESET		LOW	HIGH
22	H, L, P	**Load Current Demand (Forward)**	A.	0	N.A.	1	Reset*	N.A.	N.A.

- This is the load current, as a demand value, according to the demand time interval at Function Code 46.
- H = maximum value since last reset, L = minimum value since last reset, and P = present value.
- Scroll to the "L" and "P" values.

*A default value of "Reset" means that the parameter is reset to the present value.

VR-32 Regulator and CL-4C Control

FUNCTION CODE	FUNCTION CODE EXTENSION	PARAMETER	UNIT OF MEAS	SECURITY LEVEL			DEFAULT VALUE	KEY ENTRY LIMIT	
				TO READ	TO CHANGE	TO RESET		LOW	HIGH
23	H	**Power Factor At Maximum kVA Demand (Forward)**		0	N.A.	[A]	"----" (invalid)	N.A.	N.A.

- This is the instantaneous power factor of the load at the time when the maximum kVA demand occurred, since last reset.
- [A] This parameter is associated with the kVA demand and, therefore, cannot be reset independent of the kVA demand.

FUNCTION CODE	FUNCTION CODE EXTENSION	PARAMETER	UNIT OF MEAS	SECURITY LEVEL			DEFAULT VALUE	KEY ENTRY LIMIT	
				TO READ	TO CHANGE	TO RESET		LOW	HIGH
23	L	**Power Factor At Minimum kVA Demand (Forward)**		0	N.A.	[A]	"----" (invalid)	N.A.	N.A.

- This is the instantaneous power factor of the load at the time when the minimum kVA demand occurred, since last reset.
- [A] This parameter is associated with the kVA demand and, therefore, cannot be reset independent of the kVA demand.

FUNCTION CODE	FUNCTION CODE EXTENSION	PARAMETER	UNIT OF MEAS	SECURITY LEVEL			DEFAULT VALUE	KEY ENTRY LIMIT	
				TO READ	TO CHANGE	TO RESET		LOW	HIGH
24	H, L, P	**kVA Load Demand (Forward)**	kVA	0	N.A.	1	Reset*	N.A.	N.A.

- This is the load kVA, as a demand value, according to the demand time interval at Function Code 46.
- H = maximum value since last reset, L = minimum value since last reset, and P = present value.
- Scroll to the "L" and "P" values.

FUNCTION CODE	FUNCTION CODE EXTENSION	PARAMETER	UNIT OF MEAS	SECURITY LEVEL			DEFAULT VALUE	KEY ENTRY LIMIT	
				TO READ	TO CHANGE	TO RESET		LOW	HIGH
25	H, L, P	**kW Load Demand (Forward)**	kW	0	N.A.	1	Reset*	N.A.	N.A.

- This is the load kW, as a demand value, according to the demand time interval at Function Code 46.
- H = maximum value since last reset, L = minimum value since last reset, and P = present value.
- Scroll to the "L" and "P" values.

FUNCTION CODE	FUNCTION CODE EXTENSION	PARAMETER	UNIT OF MEAS	SECURITY LEVEL			DEFAULT VALUE	KEY ENTRY LIMIT	
				TO READ	TO CHANGE	TO RESET		LOW	HIGH
26	H, L, P	**kVAR Load Demand (Forward)**	kVAR	0	N.A.	1	Reset*	N.A.	N.A.

- This is the load kVAR, as a demand value, according to the demand time interval at Function Code 46.
- H = maximum value since last reset, L = minimum value since last reset, and P = present value.
- Scroll to the "L" and "P" values.

FUNCTION CODE	FUNCTION CODE EXTENSION	PARAMETER	UNIT OF MEAS	SECURITY LEVEL			DEFAULT VALUE	KEY ENTRY LIMIT	
				TO READ	TO CHANGE	TO RESET		LOW	HIGH
27		**Maximum % Boost (Minimum % Buck)**	%	0	N.A.	1	Reset*	N.A.	N.A.

- This is the highest percentage that the regulator has boosted the input voltage since last reset.
- Each tap corresponds to approximately 0.625% of regulation change.
- This value functions like the drag hand in the position indicator. As the regulator increases the tap setting, the drag hand is pushed higher. **Example:** The position indicator drag hand is on 8R, the regulation drag hand (Function Code 27) will display 5.0%.
- An optional differential or source voltage must be added to obtain this parameter. Lack of this voltage will result in this parameter displaying dashes. Refer to page 2-25.

FUNCTION CODE	FUNCTION CODE EXTENSION	PARAMETER	UNIT OF MEAS	SECURITY LEVEL			DEFAULT VALUE	KEY ENTRY LIMIT	
				TO READ	TO CHANGE	TO RESET		LOW	HIGH
28		**Maximum % Buck [Minimum % Boost]**	%	0	N.A.	1	Reset*	N.A.	N.A.

- This is the highest percentage that the regulator has reduced the input voltage since last reset.
- Each tap corresponds to approximately 0.625% of regulation change.
- This value functions like the drag hand in the position indicator. As the regulator decreases the tap setting, the drag hand is pushed lower. **Example:** The position indicator drag hand is on 4L, the regulation drag hand (Function Code 28) will display -2.5%.
- An optional differential or source voltage must be added to obtain this parameter. Lack of this voltage will result in this parameter displaying dashes. Refer to page 2-25.

FUNCTION CODE	FUNCTION CODE EXTENSION	PARAMETER	UNIT OF MEAS	SECURITY LEVEL			DEFAULT VALUE	KEY ENTRY LIMIT	
				TO READ	TO CHANGE	TO RESET		LOW	HIGH
30	H, L, P	**Load Voltage Demand (Reverse)**	v.	0	N.A.	1	Reset*	N.A.	N.A.

- This is the secondary output voltage of the regulator during reverse power flow, as a demand value, according to the demand time interval at Function Code 46.
- H = maximum value since last reset, L = minimum value since last reset, and P = present value.
- Scroll to the "L" and "P" values.
- An optional differential or source voltage must be added to obtain this parameter. Lack of this voltage will result in this parameter displaying dashes. Refer to page 2-25.

FUNCTION CODE	FUNCTION CODE EXTENSION	PARAMETER	UNIT OF MEAS	SECURITY LEVEL			DEFAULT VALUE	KEY ENTRY LIMIT	
				TO READ	TO CHANGE	TO RESET		LOW	HIGH
31	H, L, P	**Compensated Voltage Demand (Reverse)**	v.	0	N.A.	1	Reset*	N.A.	N.A.

- This is the calculated secondary voltage at the load center during reverse power flow, as a demand value, according to the demand time interval at Function Code 46.
- The line compensation settings for resistance and reactance (Function Codes 54 and 55) are used in this calculation.
- H = maximum value since last reset, L = minimum value since last reset, and P = present value.
- Scroll to the "L" and "P" values.
- An optional differential or source voltage must be added to obtain this parameter. Lack of this voltage will result in this parameter displaying dashes. Refer to page 2-25.

FUNCTION CODE	FUNCTION CODE EXTENSION	PARAMETER	UNIT OF MEAS	SECURITY LEVEL			DEFAULT VALUE	KEY ENTRY LIMIT	
				TO READ	TO CHANGE	TO RESET		LOW	HIGH
32	H, L, P	**Load Current Demand (Reverse)**	A.	0	N.A.	1	Reset*	N.A.	N.A.

- This is the load current during reverse power flow, as a demand value, according to the demand time interval at Function Code 46.
- H = maximum value since last reset, L = minimum value since last reset, and P = present value.
- Scroll to the "L" and "P" values.
- An optional differential or source voltage must be added to obtain this parameter. Lack of this voltage will result in this parameter displaying dashes. Refer to page 2-25.

*A default value of "Reset" means that the parameter is reset to the present value.

FUNCTION CODE	FUNCTION CODE EXTENSION	PARAMETER	UNIT OF MEAS	SECURITY LEVEL			DEFAULT VALUE	KEY ENTRY LIMIT	
				TO READ	TO CHANGE	TO RESET		LOW	HIGH
33	H	**Power Factor At Maximum kVA Demand (Reverse)**		0	N.A.	[A]	"----" (invalid)	N.A.	N.A.

- This is the instantaneous power factor of the load when the maximum kVA demand occurred during reverse power flow since last reset.
- [A] This parameter is associated with the kVA demand and, therefore, cannot be reset independent of the kVA demand.
- An optional differential or source voltage must be added to obtain this parameter. Lack of this voltage will result in this parameter displaying dashes. Refer to page 2-25.

FUNCTION CODE	FUNCTION CODE EXTENSION	PARAMETER	UNIT OF MEAS	SECURITY LEVEL			DEFAULT VALUE	KEY ENTRY LIMIT	
				TO READ	TO CHANGE	TO RESET		LOW	HIGH
33	L	**Power Factor At Minimum kVA Demand (Reverse)**		0	N.A.	[A]	"----" (invalid)	N.A.	N.A.

- This is the instantaneous power factor of the load when the minimum kVA demand occurred during reverse power flow since last reset.
- [A] This parameter is associated with the kVA demand and, therefore, cannot be reset independent of the kVA demand.
- An optional differential or source voltage must be added to obtain this parameter. Lack of this voltage will result in this parameter displaying dashes. Refer to page 2-25.

FUNCTION CODE	FUNCTION CODE EXTENSION	PARAMETER	UNIT OF MEAS	SECURITY LEVEL			DEFAULT VALUE	KEY ENTRY LIMIT	
				TO READ	TO CHANGE	TO RESET		LOW	HIGH
34	H, L, P	**kVA Load Demand (Reverse)**	kVA	0	N.A.	1	Reset*	N.A.	N.A.

- This is the load kVA during reverse power flow, as a demand value, according to the demand time interval at Function Code 46.
- H = maximum value since last reset, L = minimum value since last reset, and P = present value.
- Scroll to the "L" and "P" values.
- An optional differential or source voltage must be added to obtain this parameter. Lack of this voltage will result in this parameter displaying dashes. Refer to page 2-25.

FUNCTION CODE	FUNCTION CODE EXTENSION	PARAMETER	UNIT OF MEAS	SECURITY LEVEL			DEFAULT VALUE	KEY ENTRY LIMIT	
				TO READ	TO CHANGE	TO RESET		LOW	HIGH
35	H, L, P	**kW Load Demand (Reverse)**	kW	0	N.A.	1	Reset*	N.A.	N.A.

- This is the load kVA during reverse power flow, as a demand value, according to the demand time interval at Function Code 46.
- H = maximum value since last reset, L = minimum value since last reset, and P = present value.
- Scroll to the "L" and "P" values.
- An optional differential or source voltage must be added to obtain this parameter. Lack of this voltage will result in this parameter displaying dashes. Refer to page 2-25.

FUNCTION CODE	FUNCTION CODE EXTENSION	PARAMETER	UNIT OF MEAS	SECURITY LEVEL			DEFAULT VALUE	KEY ENTRY LIMIT	
				TO READ	TO CHANGE	TO RESET		LOW	HIGH
36	H, L, P	**kVAR Load Demand (Reverse)**	kVAR	0	N.A.	1	Reset*	N.A.	N.A.

- This is the load kVAR during reverse power flow, as a demand value, according to the demand time interval at Function Code 46.
- H = maximum value since last reset, L = minimum value since last reset, and P = present value.
- Scroll to the "L" and "P" values.
- An optional differential or source voltage must be added to obtain this parameter. Lack of this voltage will result in this parameter displaying dashes. Refer to page 2-25.

*A default value of "Reset" means that the parameter is reset to the present value.

FUNCTION CODE	FUNCTION CODE EXTENSION	PARAMETER	UNIT OF MEAS	SECURITY LEVEL			DEFAULT VALUE	KEY ENTRY LIMIT	
				TO READ	TO CHANGE	TO RESET		LOW	HIGH
38		**Master Demand Reset**		N.A.	N.A.	1	N.A.	N.A.	N.A.

- Entry of this code will reset **all** demand parameters.
- Maximum (H) and minimum (L) values will be set to their corresponding present (P) demand value.
- If the present demand is in an invalid state (dashes), the maximum and minimum values will also become invalid (displaying dashes).

FUNCTION CODE	FUNCTION CODE EXTENSION	PARAMETER	UNIT OF MEAS	SECURITY LEVEL			DEFAULT VALUE	KEY ENTRY LIMIT	
				TO READ	TO CHANGE	TO RESET		LOW	HIGH
40		**Regulator Identification**		0	2	N.A.	12345	1	32766

- Provision is made for entry of a number to uniquely identify each CL-4C Control.
- The serial number of the control (as shown on the decal on the back of the front panel) was entered at Function Code 40 at the factory. However, any other number within the limits defined above may be chosen instead.
- This permits easy identification when data is collected via the Data Reader.

FUNCTION CODE	FUNCTION CODE EXTENSION	PARAMETER	UNIT OF MEAS	SECURITY LEVEL			DEFAULT VALUE	KEY ENTRY LIMIT	
				TO READ	TO CHANGE	TO RESET		LOW	HIGH
41		**Regulator Configuration**		0	2	N.A.	"----" (invalid)	0	2

- The CL-4C Control is designed to operate on wye-connected and delta-connected three-phase systems.
- Regulators connected line-to-ground (wye) develop potentials and currents suitable for direct implementation in the CL-4C Control.
- Regulators connected line-to-line (delta) develop a potential-to-current phase shift which is dependent upon whether the regulator is defined as leading or lagging. This phase shift must be known by the CL-4C Control to permit accurate calculations for correct operation. This is accomplished by entering the proper code: 0 = Wye; 1 = Delta Lagging; or 2 = Delta Leading.
- See *Reference Bulletin R225-10-1* for a discussion of delta connections.

FUNCTION CODE	FUNCTION CODE EXTENSION	PARAMETER	UNIT OF MEAS	SECURITY LEVEL			DEFAULT VALUE	KEY ENTRY LIMIT	
				TO READ	TO CHANGE	TO RESET		LOW	HIGH
42		**Control Operating Mode**		0	2	N.A.	0	0	2

- The manner in which the control responds to out-of-band conditions is selectable by the user. The available modes are Sequential (standard), Time Integrating, and Voltage Averaging. The appropriate mode is selected by entering the corresponding code:
  - 0 = Sequential
  - 1 = Time Integrating
  - 2 = Voltage Averaging
- See *Control Operating Modes,* page 2-34.

FUNCTION CODE	FUNCTION CODE EXTENSION	PARAMETER	UNIT OF MEAS	SECURITY LEVEL			DEFAULT VALUE	KEY ENTRY LIMIT	
				TO READ	TO CHANGE	TO RESET		LOW	HIGH
43		**System Line Voltage**	v.	0	2	N.A.	"----" (Invalid)	2400	36000

- The CL-4C Control is designed to operate on primary system voltages from 2400v to 36000v.
- Ratio correction is performed by the software, and consequently, the primary voltage must be entered for this calculation.
  Example: A regulator, installed on a 7200-volt system (line-to-neutral), would have 7200 entered at Function Code 43.

VR-32 Regulator and CL-4C Control

FUNCTION CODE	FUNCTION CODE EXTENSION	PARAMETER	UNIT OF MEAS	SECURITY LEVEL			DEFAULT VALUE	KEY ENTRY LIMIT	
				TO READ	TO CHANGE	TO RESET		LOW	HIGH
44		**Potential Transformer Ratio**		0	2	N.A.	"----" (invalid)	20.0	300.0

- The CL-4C Control is designed to operate on primary system voltages from 2400v to 36000v.
- Ratio correction is performed by the software, and consequently the potential transformer (P.T.) ratio must be entered for this calculation. The P.T. ratio is available on the regulator nameplate, and is summarized in Table 2-1 on page 2-4 for all regulator ratings. **Example:** A 13800-volt regulator, installed on a 7970-volt system, would have 7970 entered at Function Code 43, and 63.8 entered at Function Code 44. The CL-4C Control will then define the 124.9 volts (output from the back panel ratio correction transformer) as the 120-base voltage, and 120v is displayed at Function Code 6.

FUNCTION CODE	FUNCTION CODE EXTENSION	PARAMETER	UNIT OF MEAS	SECURITY LEVEL			DEFAULT VALUE	KEY ENTRY LIMIT	
				TO READ	TO CHANGE	TO RESET		LOW	HIGH
45		**Current Transformer Primary Rating**	A.	0	2	N.A.	100	25	2000

- The CL-4C Control is designed for 200mA as the rated current transformer (C.T.) current, and will meter to 400mA (200% load) with no loss of accuracy.
- Ratio correction is performed by the software, and consequently the C.T. primary rating must be entered. The C.T. primary rating is available on the regulator nameplate, and is summarized in Table 2-5 on page 2-35 for all regulator ratings. **Example:** A 7620-volt, 328 amp regulator (250 kVA) would have a C.T. primary rating of 400A, and this is entered at Function Code 45.

FUNCTION CODE	FUNCTION CODE EXTENSION	PARAMETER	UNIT OF MEAS	SECURITY LEVEL			DEFAULT VALUE	KEY ENTRY LIMIT	
				TO READ	TO CHANGE	TO RESET		LOW	HIGH
46		**Demand Time Interval**	min.	0	2	N.A.	15.0	3.0	60.0

- This is the time period during which the demand integral is performed for all demand readings, Function Codes 20 through 36.
- Demand readings are useful because they represent the values which produce actual heating effects in electrical equipment, and they do not respond to the continuous fluctuations which occur on the line.

FUNCTION CODE	FUNCTION CODE EXTENSION	PARAMETER	UNIT OF MEAS	SECURITY LEVEL			DEFAULT VALUE	KEY ENTRY LIMIT	
				TO READ	TO CHANGE	TO RESET		LOW	HIGH
47		**Voltage Calibration**	v.	0	3	N.A.	[B]	110.0	130.0

- The voltage which the CL-4C Control actually measures is displayed at Function Code 47.
- To calibrate, this value is compared to a reference voltmeter and, if different, is changed to display the exact, correct value.
- Calibration is performed by the factory, and should not be necessary in the field.
- See Control Calibration, page 4-3.

FUNCTION CODE	FUNCTION CODE EXTENSION	PARAMETER	UNIT OF MEAS	SECURITY LEVEL			DEFAULT VALUE	KEY ENTRY LIMIT	
				TO READ	TO CHANGE	TO RESET		LOW	HIGH
48		**Current Calibration**	mA	0	3	N.A.	[B]	100.0	400.0

- The current which the CL-4C Control actually measures, in milli-amps, is displayed at Function Code 48.
- The CL-4C Control is designed for 200mA as the rated C.T. current, and will meter to 400 mA (200% load) with no loss of accuracy.
- To calibrate, this value is compared to a reference ammeter and, if different, is changed to display the exact, correct value.
- Calibration is performed by the factory, and should not be necessary in the field.
- See Control Calibration, page 4-3.

[B] Representative calibration "factors" are programmed into ROM for use in the event the working memory experiences a default condition.

FUNCTION CODE	FUNCTION CODE EXTENSION	PARAMETER	UNIT OF MEAS	SECURITY LEVEL			DEFAULT VALUE	KEY ENTRY LIMIT	
				TO READ	TO CHANGE	TO RESET		LOW	HIGH
51		**Set Voltage (Reverse)**	v.	0	2	N.A.	120.0	100.0	135.0

- The set voltage is the voltage level to which the control will regulate, on the 120-volt base, during reverse power flow.
- See *Reverse Power Operation,* page 2-25.

FUNCTION CODE	FUNCTION CODE EXTENSION	PARAMETER	UNIT OF MEAS	SECURITY LEVEL			DEFAULT VALUE	KEY ENTRY LIMIT	
				TO READ	TO CHANGE	TO RESET		LOW	HIGH
52		**Bandwidth (Reverse)**	v.	0	2	N.A.	2.0	1.0	6.0

- The bandwidth is defined as that total voltage range, around the set voltage, which the control will consider as a satisfied (in-band) condition, during reverse power flow. **Example:** A band width of 3-volts and a set voltage of 120-volts will establish a low limit of 118.5 volts and a high limit of 121.5 volts.
- See *Reverse Power Operation,* page 2-25.

FUNCTION CODE	FUNCTION CODE EXTENSION	PARAMETER	UNIT OF MEAS	SECURITY LEVEL			DEFAULT VALUE	KEY ENTRY LIMIT	
				TO READ	TO CHANGE	TO RESET		LOW	HIGH
53		**Time Delay (Reverse)**	sec.	0	2	N.A.	30	5	180

- The time delay is the period of time (in seconds) that the control waits, from the time when the voltage first goes out-of-band, to the time when the relay closure occurs, during reverse power flow.
- See *Reverse Power Operation,* page 2-25.

FUNCTION CODE	FUNCTION CODE EXTENSION	PARAMETER	UNIT OF MEAS	SECURITY LEVEL			DEFAULT VALUE	KEY ENTRY LIMIT	
				TO READ	TO CHANGE	TO RESET		LOW	HIGH
54		**Line Compensation, Resistance (Reverse)**	v.	0	2	N.A.	0.0	-24.0	24.0

- The resistive line drop compensation value is used to model the resistive line losses between the regulator and the theoretical load center.
- The CL-4C Control uses this parameter, in conjunction with the load current flow to calculate the compensated voltage (displayed at Function Code 8) during the reverse power flow.
- See *Reverse Power Operation,* page 2-25.

FUNCTION CODE	FUNCTION CODE EXTENSION	PARAMETER	UNIT OF MEAS	SECURITY LEVEL			DEFAULT VALUE	KEY ENTRY LIMIT	
				TO READ	TO CHANGE	TO RESET		LOW	HIGH
55		**Line Compensation, Reactance (Reverse)**	v.	0	2	N.A.	0.0	-24.0	24.0

- The reactive line drop compensation value is used to model the reactive line losses between the regulator and the theoretical load center.
- The CL-4C Control uses this parameter, in conjunction with the load current flow to calculate the compensated voltage (displayed at Function Code 8) during the reverse power flow.
- See *Reverse Power Operation,* page 2-25.

VR-32 Regulator and CL-4C Control

FUNCTION CODE	FUNCTION CODE EXTENSION	PARAMETER	UNIT OF MEAS	SECURITY LEVEL			DEFAULT VALUE	KEY ENTRY LIMIT	
				TO READ	TO CHANGE	TO RESET		LOW	HIGH
56		**Reverse Sensing Method**		0	2	N.A.	0	0	5

- The CL-4C Control offers six different response characteristics for reverse power flow operation, selectable by the user. The six modes, and their corresponding codes are:
  - 0 = Locked Forward
  - 1 = Locked Reverse
  - 2 = Reverse Idle
  - 3 = Bi-directional
  - 4 = Neutral Idle
  - 5 = Co-generation
- See *Reverse Power Operation,* page 2-25.

FUNCTION CODE	FUNCTION CODE EXTENSION	PARAMETER	UNIT OF MEAS	SECURITY LEVEL			DEFAULT VALUE	KEY ENTRY LIMIT	
				TO READ	TO CHANGE	TO RESET		LOW	HIGH
57		**Reverse Threshold**	%	0	2	N.A.	2	1	5

- This is the current threshold at which the CL-4C Control switches **operation,** either from forward to reverse, or reverse to forward.
- This threshold is programmable as a percentage of the rated C.T. secondary current. **Example:** a 328-amp regulator utilizing a C.T. with a 400 amp primary rating, and with a 3% threshold value would have a threshold of 6 mA (12 amps).
- The **metering** of the CL-4C Control switches on a fixed 1% threshold, completely independent from Function Code 57.
- See *Reverse Power Operation,* page 2-25.

FUNCTION CODE	FUNCTION CODE EXTENSION	PARAMETER	UNIT OF MEAS	SECURITY LEVEL			DEFAULT VALUE	KEY ENTRY LIMIT	
				TO READ	TO CHANGE	TO RESET		LOW	HIGH
60		**Data Port Baud Rate**		0	2	N.A.	4	1	4

- The microprocessor on the CL-4C Control has two communications channels, each with selectable baud rates. (Baud rate is the number of bits per second of data that can be transferred.)
- Channel #1 is dedicated to the 9-pin "Data Port" located on the CL-4C Control front panel. The available baud rates for Channel #1 are:
  1 = 300 BAUD; 2 = 1200 BAUD; 3 = 2400 BAUD; and 4 = 4800 BAUD.
- To permit communications with the McGraw-Edison Data Reader (data gathering device), the Channel #1 baud rate has been factory-set to 4800; i.e., Function Code 60 = "4."

FUNCTION CODE	FUNCTION CODE EXTENSION	PARAMETER	UNIT OF MEAS	SECURITY LEVEL			DEFAULT VALUE	KEY ENTRY LIMIT	
				TO READ	TO CHANGE	TO RESET		LOW	HIGH
61		**Interface Port Baud Rate**		0	2	N.A.	5	1	5

- The microprocessor on the CL-4C Control has two communications channels, each with selectable baud rates. (Baud rate is the number of bits per second of data that can be transferred.)
- Channel #2 is dedicated to the communications interface card which mounts directly above the CL-4C main board set, and communicates to SCADA systems. The available baud rates for Channel # 2 are: 1 = 300 BAUD; 2 = 1200 BAUD; 3 = 2400 BAUD; 4 = 4800 BAUD; and 5 = 15625 BAUD.
- To permit communications with the communications interface card (a part of the SCADA system interface), channel #2 baud rate must be set to 15625 BAUD, i.e. Function Code 61 = "5."

FUNCTION CODE	FUNCTION CODE EXTENSION	PARAMETER	UNIT OF MEAS	SECURITY LEVEL			DEFAULT VALUE	KEY ENTRY LIMIT	
				TO READ	TO CHANGE	TO RESET		LOW	HIGH
62		**Channel 1 Status**		0	N.A.	N.A.	N.A.	N.A.	N.A.

- The CL-4C microprocessor monitors the communications channels and reports the status of the communications sessions.
- The status of the communications taking place on channel 1 (Data Port) is displayed here. This is for information use only.
- Status codes are listed with Function Code 63.

FUNCTION CODE	FUNCTION CODE EXTENSION	PARAMETER	UNIT OF MEAS	SECURITY LEVEL			DEFAULT VALUE	KEY ENTRY LIMIT	
				TO READ	TO CHANGE	TO RESET		LOW	HIGH
63		**Channel 2 Status**		0	N.A.	N.A.	N.A.	N.A.	N.A.

- The CL-4C microprocessor monitors the communications channels and reports the status of the communications sessions.
- The status of the communications taking place on channel 2 (communications interface card) is displayed here. This is for information use only.
- Status codes for both Function Codes 62 and 63 are listed as follows:

0 = Valid message received
1 = Control in local mode
2 = Framing error in the received message
3 = Overrun error in the received message
4 = Noise error in the received message
5 = Parity error in the received message
6 = Checksum error in the received message
7 = Invalid point type requested
8 = Invalid command received
9 = Invalid point number specified
---- = Channel inactive

FUNCTION CODE	FUNCTION CODE EXTENSION	PARAMETER	UNIT OF MEAS.	SECURITY LEVEL			DEFAULT VALUE	KEY ENTRY LIMIT	
				TO READ	TO CHANGE	TO RESET		LOW	HIGH
64		**Control Communications Address**		0	2	N.A.	"----" (invalid)	0	32766

- Cooper Power Systems has developed advanced controls for various products utilizing a common protocol (see Communications, page 2-28).
- Each control on the system can be uniquely addressed by the SCADA RTU.
- The CL-4C Control SCADA address is entered here with a factory set address of 2.
- For existing protocol called DATA-2200, the device addresses and responses are as follows:

0 = Wild card address. All controls on the system respond if a message is sent to address 0. In practice this requires a star configuration where each control has a dedicated line.

1-200 = Unique device address range. Controls with addresses in this range uniquely respond when the particular address is sent.

201-254 = Device type, group address range. The group address is dependent upon the device type. For example, the CL-4C Control is device type 1, and its group address is 255-1 = 254. Any message sent to address 254 causes all connected CL-4C controls to listen and change as commanded, with no return response. Similarly, the the FORM 4C recloser control is device type 3, its group address is 255-3 = 252. Any message sent to address 252 causes all connected FORM 4C recloser controls to listen and change as commanded, with no return response. This capability allows regulator, recloser, and future C.P.S. controls to be connected on the same communications loop from the RTU and each "group" of devices can be selected by a single message.

255 = Broadcast address. All controls on the system listen and change as commanded, with no return response if a message is sent to address 255.

FUNCTION CODE	FUNCTION CODE EXTENSION	PARAMETER	UNIT OF MEAS.	SECURITY LEVEL			DEFAULT VALUE	KEY ENTRY LIMIT	
				TO READ	TO CHANGE	TO RESET		LOW	HIGH
65		**Communications Port Baud Rate**		0	2	N.A.	"----" (invalid)	1	5

- The user may select the baud rate to which the CL-4C control system interfaces to the SCADA system. The available baud rates are: 1 = 300 BAUD; 2 = 1200 BAUD; 3 = 2400 BAUD; 4 = 4800 BAUD; 5 = 9600 BAUD.
- The control is factory set for 4800 BAUD.

VR-32 Regulator and CL-4C Control

FUNCTION CODE	FUNCTION CODE EXTENSION	PARAMETER	UNIT OF MEAS.	SECURITY LEVEL			DEFAULT VALUE	KEY ENTRY LIMIT	
				TO READ	TO CHANGE	TO RESET		LOW	HIGH
66		**Communications Port Handshake Mode**		0	2	N.A.	"----" (invalid)	0	2

- The user can select the appropriate method for control-to-SCADA message interaction (handshake mode).
- The available modes are:
  0 = No handshaking. The request-to-send (RTS) input line is ignored and the clear-to-send (CTS) output line is off.
  1 = Handshaking. The RTS input and CTS output line are both active.
  2 = Transmit control handshaking. The RTS input line is ignored and the CTS output line acts as a transmit enable. This is the normal mode for the presently supported fiber optic loop system, i.e., Function Code 66 = 2.

FUNCTION CODE	FUNCTION CODE EXTENSION	PARAMETER	UNIT OF MEAS.	SECURITY LEVEL			DEFAULT VALUE	KEY ENTRY LIMIT	
				TO READ	TO CHANGE	TO RESET		LOW	HIGH
67		**Communications Port Resynch Time Chars.**	Char.	0	2	N.A.	"----" (invalid)	0	10

- Messages are sent to the CL-4C control in a serial asynchronous manner from the SCADA RTU. The control must determine when one message ends and the next begins. This distinction is made based upon a period of idle time between received characters. If a "new" character is not received within an expected time period (as entered at this function code), the control resynchs on the next character as a new message. This parameter is based upon the communications port baud rate (Function Code 65), and is expressed as a number of characters.
- This normally will be set to 1 for the DATA-2200 protocol.

FUNCTION CODE	FUNCTION CODE EXTENSION	PARAMETER	UNIT OF MEAS.	SECURITY LEVEL			DEFAULT VALUE	KEY ENTRY LIMIT	
				TO READ	TO CHANGE	TO RESET		LOW	HIGH
68		**Communications Port Transmit Enable Delay**	msec.	0	2	N.A.	"----" (invalid)	0	100

- When the control is set for transmit control handshaking (Function Code 66 = 2), the user may require a delay to occur between the time when the CTS line is enabled to when data is transmitted. As an example, if the CTS line were used as a keying device for a transmitter, or modem, a "warm-up" period may be necessary before data can be transmitted.
- The delay period can be entered at this function code and is normally set to 0 for the presently supported communications system.

FUNCTION CODE	FUNCTION CODE EXTENSION	PARAMETER	UNIT OF MEAS.	SECURITY LEVEL			DEFAULT VALUE	KEY ENTRY LIMIT	
				TO READ	TO CHANGE	TO RESET		LOW	HIGH
69		**Regulation Blocking Status**		0	2	N.A.	0	0	1

- The CL-4C Control with communications options allows the user to completely control the regulator through the SCADA system. The SCADA system may place the regulator in a "BLOCKED" state, thus inhibiting any further tap changer operation. A practical example might be to perform a certain amount of voltage reduction, and then disable the tap changer (inhibit additional operations) for an indefinite time period.
- When the control is blocked (automatic operation inhibited), Function Code 69 will display "1." Similarly, when Function Code 69 displays "0," normal automatic operations will occur.
- The operator may change the state of this code by entering the level 2 security level at the CL-4C Control and pressing the CHANGE/RESET key. If SCADA has the control blocked, the operator may override the SCADA system by changing Function Code 69 from "1" to "0," or if the operator chooses to block automatic operation, Function Code 69 can be changed from "0" to "1."
- Additional information concerning the SCADA interaction with the CL-4C Control is described in the section titled *"Communications,"* on page 2-28.

FUNCTION CODE	FUNCTION CODE EXTENSION	PARAMETER	UNIT OF MEAS	SECURITY LEVEL			DEFAULT VALUE	KEY ENTRY LIMIT	
				TO READ	TO CHANGE	TO RESET		LOW	HIGH
70		**Voltage Reduction Mode**		0	2	N.A.	0	0	3

- The CL-4C Control has three voltage reduction modes available for user selection. The appropriate mode is activated by entering the corresponding code:
  - 0 = Off
  - 1 = Local
  - 2 = Remote
  - 3 = Automatic with Override
- See *Voltage Reduction,* page 2-30.

FUNCTION CODE	FUNCTION CODE EXTENSION	PARAMETER	UNIT OF MEAS	SECURITY LEVEL			DEFAULT VALUE	KEY ENTRY LIMIT	
				TO READ	TO CHANGE	TO RESET		LOW	HIGH
71		**Percent Voltage Reduction In Effect**	%	0	N.A.	N.A.	N.A.	N.A.	N.A.

- This is the actual percentage of voltage reduction presently active.
- If automatic voltage reduction is in effect, the display will also indicate that it is being activated by the Automatic Mode with an "A." **Example:** If the display reads 71 A 2.5, then 2.5% of voltage reduction is in effect, and it has been activated by the Automatic Mode.
- See *Voltage Reduction,* page 2-30.

FUNCTION CODE	FUNCTION CODE EXTENSION	PARAMETER	UNIT OF MEAS	SECURITY LEVEL			DEFAULT VALUE	KEY ENTRY LIMIT	
				TO READ	TO CHANGE	TO RESET		LOW	HIGH
72		**Local Voltage Reduction %**	%	0	2	N.A.	0.0	0.0	10.0

- The percentage of "local" (immediate) voltage reduction to be performed, is entered here. **Example:** If the regulator is set for 125v voltage setting and 3.6% voltage reduction is required, 3.6% is entered here (first set Funtion Code 70 = 1), and the regulator will tap down 4.5 volts (3.6% of 125v) immediately following the time delay period.
- See *Voltage Reduction,* page 2-30.

FUNCTION CODE	FUNCTION CODE EXTENSION	PARAMETER	UNIT OF MEAS	SECURITY LEVEL			DEFAULT VALUE	KEY ENTRY LIMIT	
				TO READ	TO CHANGE	TO RESET		LOW	HIGH
73		**Remote Reduction Setting #1**	%	0	2	N.A.	0.0	0.0	10.0

- Three levels of remotely activated voltage reduction are available with the CL-4C Control.
- The percentage of voltage reduction to be performed at Remote Level 1 is programmed at Function Code 73. Remote activation is then accomplished by applying a signal to the appropriate input terminal, when Function Code 70 = 2 or 3.
- See *Voltage Reduction,* page 2-30.

FUNCTION CODE	FUNCTION CODE EXTENSION	PARAMETER	UNIT OF MEAS	SECURITY LEVEL			DEFAULT VALUE	KEY ENTRY LIMIT	
				TO READ	TO CHANGE	TO RESET		LOW	HIGH
74		**Remote Reduction Setting #2**	%	0	2	N.A.	0.0	0.0	10.0

- Three levels of remotely activated voltage reduction are available with the CL-4C Control.
- The percentage of voltage reduction to be performed at Remote Level 2 is programmed at Function Code 74. Remote activation is then accomplished by applying a signal to the appropriate input terminal, when Function Code 70 = 2 or 3.
- See *Voltage Reduction,* page 2-30.

VR-32 Regulator and CL-4C Control

FUNCTION CODE	FUNCTION CODE EXTENSION	PARAMETER	UNIT OF MEAS	SECURITY LEVEL			DEFAULT VALUE	KEY ENTRY LIMIT	
				TO READ	TO CHANGE	TO RESET		LOW	HIGH
75		**Remote Reduction Setting #3**	%	0	2	N.A.	0.0	0.0	10.0

- Three levels of remotely activated voltage reduction are available with the CL-4C Control.
- The percentage of voltage reduction to be performed at Remote Level 3 is programmed at Function Code 75. Remote activation is then accomplished by applying a signal simultaneously to both voltage reduction input terminals, when Function Code 70 = 2 or 3.
- See *Voltage Reduction,* page 2-30.

FUNCTION CODE	FUNCTION CODE EXTENSION	PARAMETER	UNIT OF MEAS	SECURITY LEVEL			DEFAULT VALUE	KEY ENTRY LIMIT	
				TO READ	TO CHANGE	TO RESET		LOW	HIGH
76		**Automatic Reduction Setting #1**	%	0	2	N.A.	0.0.	0.0.	10.0.

- Two levels of automatically activated voltage reduction are available with the CL-4C Control.
- The percentage of reduction to be performed at Automatic Level 1 is entered here.
- Automatic activation for Level 1 occurs as a result of the load current exceeding the "turn-on" threshold at Function Code 78, when Function Code 70 = 3.
- Automatic voltage reduction is overridden by remote voltage reduction.
- See *Voltage Reduction,* page 2-30.

FUNCTION CODE	FUNCTION CODE EXTENSION	PARAMETER	UNIT OF MEAS	SECURITY LEVEL			DEFAULT VALUE	KEY ENTRY LIMIT	
				TO READ	TO CHANGE	TO RESET		LOW	HIGH
77		**Automatic Reduction Setting #2**	%	0	2	N.A.	0.0	0.0	10.0

- Two levels of automatically activated voltage reduction are available with the CL-4C Control.
- The percentage of reduction entered here is **added to** the value entered at Function Code 76 to provide the Automatic Level 2 reduction amount. **Example:** If Function Code 76 = 2.5% and Function Code 77 is set to equal 3.0%, then the Automatic Level 2 reduction will be 5.5%.
- Automatic activation for Level 2 occurs as a result of the load current exceeding the "turn-on" threshold at Function Code 79, when Function Code 70 = 3.
- Automatic voltage reduction is overridden by remote voltage reduction.
- See *Voltage Reduction,* page 2-30.

FUNCTION CODE	FUNCTION CODE EXTENSION	PARAMETER	UNIT OF MEAS	SECURITY LEVEL			DEFAULT VALUE	KEY ENTRY LIMIT	
				TO READ	TO CHANGE	TO RESET		LOW	HIGH
78		**Percent Current For Automatic #1**	%	0	2	N.A.	0	20	150

- When activated, automatic voltage reduction occurs as a result of the load current exceeding a preset threshold value.
- The "turn-on" current for Automatic Level 1 is entered here as a percentage of **full load C.T. secondary current. Example:** Desiring a turn-on threshold at 50% of the full load rating on a 328 amp regulator which uses a 400 amp C.T., calculate the threshold as follows 328/400 × 50% = 41%. Enter 41 at Function Code 78.
- See *Voltage Reduction,* page 2-30.

FUNCTION CODE	FUNCTION CODE EXTENSION	PARAMETER	UNIT OF MEAS	SECURITY LEVEL			DEFAULT VALUE	KEY ENTRY LIMIT	
				TO READ	TO CHANGE	TO RESET		LOW	HIGH
79		**Percent Current For Automatic #2**	%	0	2	N.A.	0	20	150

- When activated, automatic voltage reduction occurs as a result of the load current exceeding a preset threshold.
- The "turn-on" current for Automatic Level 2 is entered here as a percentage of **full load C.T. secondary current. Example:** Desiring a turn-on threshold at 100% of the full load rating on a 328 amp regulator which uses a 400 amp C.T., calculate the threshold as follows: 328/400 × 100% = 82%. Enter 82 at Function Code 78.
- See *Voltage Reduction,* page 2-30.

FUNCTION CODE	FUNCTION CODE EXTENSION	PARAMETER	UNIT OF MEAS	SECURITY LEVEL			DEFAULT VALUE	KEY ENTRY LIMIT	
				TO READ	TO CHANGE	TO RESET		LOW	HIGH
80		**Voltage Limiting Mode**		0	2	N.A.	0	0	2

- The CL-4C Control has built-in voltage limiting capabilities for both a low-voltage or high-voltage condition.
- The appropriate mode is activated by entering the corresponding code:
  0 = Off
  1 = High limit active only
  2 = High and low limit active
- See *Voltage Limiting,* page 2-31.

FUNCTION CODE	FUNCTION CODE EXTENSION	PARAMETER	UNIT OF MEAS	SECURITY LEVEL			DEFAULT VALUE	KEY ENTRY LIMIT	
				TO READ	TO CHANGE	TO RESET		LOW	HIGH
81		**High Voltage Limit**	v.	0	2	N.A.	130.0	120.0	135.0

- The high-voltage limit is programmed here.
- When the voltage limiting function is activated (Function Code 80 = 1 or 2), the control will prevent the output voltage of the regulator from exceeding this value.
- See *Voltage Limiting,* page 2-31.

FUNCTION CODE	FUNCTION CODE EXTENSION	PARAMETER	UNIT OF MEAS	SECURITY LEVEL			DEFAULT VALUE	KEY ENTRY LIMIT	
				TO READ	TO CHANGE	TO RESET		LOW	HIGH
82		**Low Voltage Limit**	v.	0	2	N.A.	105.0	105.0	120.0

- The low-voltage limit is programmed here.
- When the voltage limiting function is activated (Function Code 80 = 2), the control will prevent the output voltage of the regulator from dropping below this value.
- See *Voltage Limiting,* page 2-31.

FUNCTION CODE	FUNCTION CODE EXTENSION	PARAMETER	UNIT OF MEAS	SECURITY LEVEL			DEFAULT VALUE	KEY ENTRY LIMIT	
				TO READ	TO CHANGE	TO RESET		LOW	HIGH
89		**Device Software Version**		0	N.A.	N.A.	N.A.	N.A.	N.A.

- The version number of the software is displayed at Function Code 89, for information only. This number cannot be changed via the keypad.
- Present production CL-4C Controls contain version 4.01 software; initial production contained version 1.01, 2.01, & 3.01 software.
- If additional enhancements are performed, new version numbers will be assigned to readily identify any device.

FUNCTION CODE	FUNCTION CODE EXTENSION	PARAMETER	UNIT OF MEAS	SECURITY LEVEL			DEFAULT VALUE	KEY ENTRY LIMIT	
				TO READ	TO CHANGE	TO RESET		LOW	HIGH
90		**Number of Defaults**		0	N.A.	N.A.	N.A.	N.A.	N.A.

- This is a counter for the number of parameters in the CL-4C Control operating system which have defaulted.
- During normal operation this will be zero.
- If any number other than zero is encountered, all of the CL-4C Control settings must be examined to determine which has defaulted. Then the setting(s) must be changed to the correct value(s).

VR-32 Regulator and CL-4C Control

FUNCTION CODE	FUNCTION CODE EXTENSION	PARAMETER	UNIT OF MEAS	SECURITY LEVEL			DEFAULT VALUE	KEY ENTRY LIMIT	
				TO READ	TO CHANGE	TO RESET		LOW	HIGH
91		**Self Test**		N.A.	N.A.	N.A.	N.A.	N.A.	N.A.

- The CL-4C Control will execute a self-diagnostic routine by entry of Function Code 91.
- This causes the system to re-boot, or initialize itself, and in so doing it checks the various components for failures.
- The test initiates by lighting all segments in the display for 3 seconds, and then displays "PASS" or "FAIL," depending upon the test results.
- Performing the SELF TEST will appear as a power interruption to the CL-4C Control demand task, and accordingly, it will cause the present demands to go invalid (dashes) and the Max/Min demands to cease tracking for one demand interval.

FUNCTION CODE	FUNCTION CODE EXTENSION	PARAMETER	UNIT OF MEAS	SECURITY LEVEL			DEFAULT VALUE	KEY ENTRY LIMIT	
				TO READ	TO CHANGE	TO RESET		LOW	HIGH
93		**Number Of EEPROM Corrections**		3	N.A.	3	0	N.A.	N.A.

- This is a counter for the number of times the CL-4C Control has detected an incorrect value in its non-volatile memory (EEPROM), and has changed it to the correct value.
- This is for information only.

FUNCTION CODE	FUNCTION CODE EXTENSION	PARAMETER	UNIT OF MEAS	SECURITY LEVEL			DEFAULT VALUE	KEY ENTRY LIMIT	
				TO READ	TO CHANGE	TO RESET		LOW	HIGH
94		**Number Of Resets**		3	N.A.	3	0	N.A.	N.A.

- This is a counter for the number of times the CL-4C Control has experienced a transient condition (such as a lightning stroke) which causes it to reset.
- The CL-4C Control will recover after a transient condition and will resume normal operations.

FUNCTION CODE	FUNCTION CODE EXTENSION	PARAMETER	UNIT OF MEAS	SECURITY LEVEL			DEFAULT VALUE	KEY ENTRY LIMIT	
				TO READ	TO CHANGE	TO RESET		LOW	HIGH
95		**System Status Code**		3	N.A.	N.A.	N.A.	N.A.	N.A.

- The CL-4C Control is continually checking itself, and the results of this self-diagnosis are displayed at Function Code 95 via a System Code Number as follows:
- System Codes:
  0 = All Systems Good
  1 = EEPROM Write Failure
  2 = EEPROM Erase Failure
  3 = Frequency Detection Failure
  4 = No Sampling Interrupt
  5 = Analog-to-Digital Converter Failure
  6 = Invalid Critical Parameters
  7 = No Source Voltage Detected
  8 = No Output Voltage Detected
  9 = No Source and Output Voltage Detected.
- See *System Protection-Diagnostics,* page 2-31.

FUNCTION CODE	FUNCTION CODE EXTENSION	PARAMETER	UNIT OF MEAS	SECURITY LEVEL			DEFAULT VALUE	KEY ENTRY LIMIT	
				TO READ	TO CHANGE	TO RESET		LOW	HIGH
96		**Level 1 Security Code**		3	3	N.A.	1234	1	9999

- The number to be used as the Level 1 security code is entered here.
- The Level 1 code assigned at the factory is 1234.
- Entry of this number at Function Code 99 permits the user to change/reset only the parameters marked as Level 1 security (demand readings).
- See *Security System,* page 2-32.

FUNCTION CODE	FUNCTION CODE EXTENSION	PARAMETER	UNIT OF MEAS	SECURITY LEVEL			DEFAULT VALUE	KEY ENTRY LIMIT	
				TO READ	TO CHANGE	TO RESET		LOW	HIGH
97		**Level 2 Security Code**		3	3	N.A.	12121	10000	19999

- The number to be used as the Level 2 security code is entered here.
- The Level 2 code assigned at the factory is 12121.
- Entry of this number at Function Code 99 permits the user to change/reset the parameters marked as Level 2 security (control settings, configuration, **and** Level 1 security code).
- See *Security System,* page 2-32.

FUNCTION CODE	FUNCTION CODE EXTENSION	PARAMETER	UNIT OF MEAS	SECURITY LEVEL			DEFAULT VALUE	KEY ENTRY LIMIT	
				TO READ	TO CHANGE	TO RESET		LOW	HIGH
98		**Level 3 Security Code**		3	3	N.A.	32123	20000	32766

- The number to be used as the Level 3 security code is entered here.
- The Level 3 code assigned at the factory is 32123.
- Entry of this number at Function Code 99 permits the user to change/reset any parameter.
- **NOTICE**
  If the Level 3 code is changed by the user, the new value should be recorded and kept in a safe place. Loss of this code means that security codes cannot be displayed or changed, diagnostic codes cannot be displayed or changed, and calibration cannot be performed.
- See *Security System,* page 2-32.

FUNCTION CODE	FUNCTION CODE EXTENSION	PARAMETER	UNIT OF MEAS	SECURITY LEVEL			DEFAULT VALUE	KEY ENTRY LIMIT	
				TO READ	TO CHANGE	TO RESET		LOW	HIGH
99		**Enter Security Code**		N.A.	0	N.A.	N.A.	1	32766

- This is the function code location where the security codes are entered for access to the system.
- The CL-4C Control is continually scanning Function Code 99, looking for a security code entry for any of the three security levels.

DIFFERENTIAL VOLTAGE

Unless specifically ordered, or required as a part of the specified operation, most regulator designs will be without the internal differential voltage P.T. Without a differential voltage input, several functions cannot be obtained, and will indicate dashes when displayed. Also, Function Code 95 will display a "7" to indicate no input voltage. The following function codes will be invalid:

Table 2-3
Function code dependent upon differential voltage.

Function Code	Description
7	Secondary Source Voltage
11	Primary Source Voltage
12	Percent Regulation
6 - 16	Reverse Instantaneous Values
27	Maximum % Boost/Minimum % Buck
28	Maximum % Buck/Minimum % Boost
30 - 36	All Reverse Metered Demand Values

If the parameters listed above are desired and the regulator is not equipped with an internal differential potential transformer, an external source side potential transformer may be connected to the control. See *Reverse Power Operation,* below.

ACCESSORY OPERATION

Demand Task Operation

The CL-4C Control provides demand values for six parameters: 1) load voltage; 2) compensated voltage; 3) load current, 4) kVA load; 5) kW load; and 6) kVAR load. Additionally, the power factor at the maximum kVA demand and minimum kVA demand are also recorded. These demand parameters work like drag hands—as new peaks occur, the high "H" value gets pushed higher, and as new minimums occur, the low "L" values get pushed lower. The present "P" value indicates the demand at the present time.

The demand metering function is based upon a sliding window concept, or moving integral. The algorithm implemented simulates the response of a thermal demand meter which will reach 90% of its final value after one demand interval in response to a step function input. This has the exponential response characteristic shown in Figure 2-5.

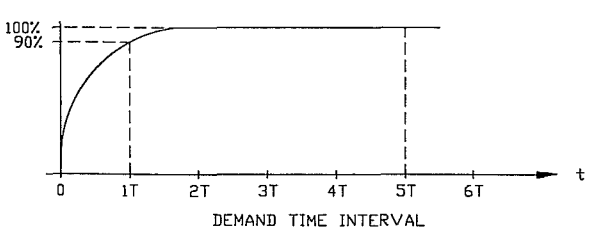

Figure 2-5
Demand time interval response.

The task itself works like this:

1) For 3 minutes after a power outage OR power reversal, no demands are calculated. This allows the utility system to stabilize from the event which created the outage or power reversal.
2) At 3 minutes, the present demands (for the appropriate power direction) are set to their corresponding instantaneous value, and the integration algorithm begins according to the programmed demand interval at Function Code 46.
3) At 15 minutes or the demand time interval (whichever is longer), the max/min demand values begin to track the present demand, similar to drag hands. All demand values are calculated continuously in the working memory (RAM), and the max/min demands are also stored in the non-volatile memory (EEPROM) every 15 minutes, if a change has occurred. This prevents loss of data during a power interruption or outage.

Notice that the provisions are made to reset any demand value by itself via the change/reset key, or all demands can be reset simultaneously by entering Function Code 38. Maximum (H) and minimum (L) values will be set to their corresponding present (P) demand value. If the present demand is in an invalid state (dashes), the maximum and minimum values will also become invalid, displaying dashes.

Two conditions cause the present demands to be invalid: (1) The power has just been applied (within the 3-minute freeze period); or (2) the power flow has changed direction. If the CL-4C Control is metering in the forward direction, the reverse present demands will be invalid; and if metering in the reverse direction, the forward present demands will be invalid.

Reverse Power Operation

Most voltage regulators are installed in circuits with well-defined power flow from source to load. However, some circuits have interconnections or loops in which the direction of power flow through the regulator may change. For optimum utility system performance, a regulator installed on such a circuit should have the capability of detecting reverse power flow, and of sensing and controlling the voltage, regardless of the power flow direction.

The CL-4C Control has full reverse power capabilities, but for fully automatic reverse operation the source voltage or source-to-load differential voltage must be supplied to the CL-4C Control in addition to the load voltage. Regulators may be ordered direct from the factory with an internal (source-to-load) differential P.T. or an external source-side P.T. may be installed in the field. In either case, a second Ratio Correcting Transformer (RCT) on the control back panel is required for proper correction of the source voltage (regulators with factory-installed differential P.T.'s also have the second RCT installed at the factory).

Some field installations may require that a source voltage P.T. be used instead of a differential (series winding P.T.), which is the standard technique used on the McGraw-Edison voltage regulator. The CL-4C Control is designed such that it can be configured for this application also. This reconfiguration is accomplished by removing the back shield and moving a soldered jumper from one set of terminal posts to another (they are clearly labeled Vin and Vdiff). The software of the CL-4C Control then recognizes this differential/source voltage as a source voltage, and will function accordingly.

The CL-4C Control offers 6 different response characteristics for reverse power detection and operation. These characteristics are user selectable by entering a particular code at Function Code 56. The six modes, and their corresponding codes are:

0 = Locked Forward
1 = Locked Reverse
2 = Reverse Idle
3 = Bi-directional
4 = Neutral Idle
5 = Co-generation.

This section will separately explain each mode of operation. Since the CL-4C Control retains the reverse metered demand values separate from the forward metered values, the metering will also be explained for each mode.

In determining power direction, the CL-4C Control senses only the **real component of the current,** and then determines the current direction and magnitude in that direction. When the conditions dictate a power reversal has occurred, the following parameters assume new values, and the control operation is affected accordingly:

OUTPUT VOLTAGE - now sensed from what was previously the input transformer.

INPUT VOLTAGE - now sensed from what was previously the output transformer.

LOAD CURRENT - in the forward direction, the current is used directly as measured. In the reverse direction, the current is scaled to reflect the ratio difference between the input and output side of the regulator, according to this formula:

$$\text{reverse load current} = \frac{(\text{forward load current})(\text{input voltage secondary})}{\text{output voltage secondary}}$$

where "input voltage secondary" and "output voltage secondary" are in the reverse direction.

kVA, kW, kVAR, and %BUCK/BOOST are now calculated based upon the new metered reverse values.

LOCKED FORWARD MODE - Function Code 56 = 0
No Source P.T. is Required.
METERING: Always operates in the forward direction, regardless of power flow direction. If reverse power occurs, the metering functions remain on the normal load side of the regulator—no reverse demand readings will occur. This mode is not intended to be used in applications where reverse power flow is possible.
OPERATION: Always operates in the forward direction. This allows operation down to zero current conditions since there is no forward threshold involved. A safeguard has been built into the control to prevent misoperation in the event reverse power flow does occur. If more than 2% (.004 amps C.T. secondary) reverse current occurs, the control idles on the last tap position held, and the band edge indicators will turn off. As the current flow returns to a level above this reverse threshold, normal forward operation resumes.

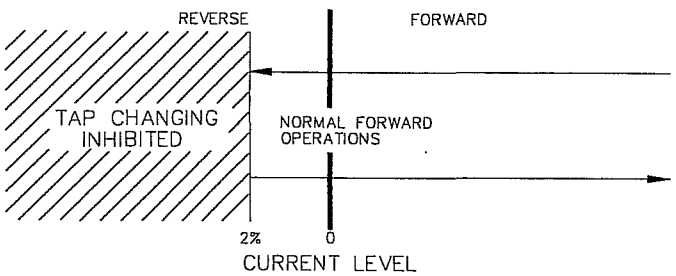

Figure 2-6
Locked forward mode operation.

LOCKED REVERSE MODE - Function Code 56 = 1
Source P.T. is Required
METERING: Always operates in the reverse direction, regardless of power flow direction. If forward power occurs, the metering functions remain on the source side of the regulator—no forward demand readings will occur. This mode is not intended to be used in applications where forward power flow is possible.
OPERATION: Always operates in the reverse direction using the reverse settings at Function Codes 51, 52, 53, 54 and 55. This allows operation down to zero current conditions since there is no reverse threshold involved. A safeguard has been built into the control to prevent misoperation in the event forward power flow does occur. If more than 2% (.004 amps C.T. secondary) forward current occurs, the control idles on the last tap position held, and the band edge indicators will turn off. As the current flow returns to a level above this forward threshold, normal forward operation resumes.

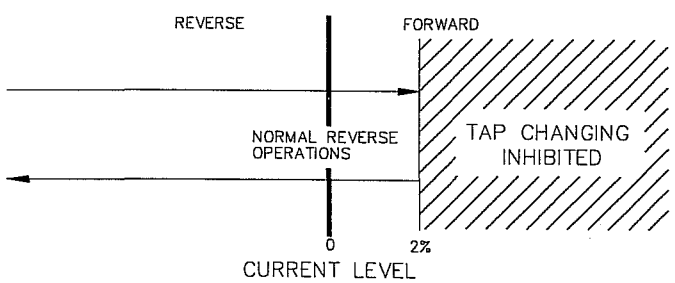

Figure 2-7
Locked reverse mode operation.

REVERSE IDLE MODE - Function Code 56 = 2
Source P.T. Required for Metering Only.
METERING: A threshold level of 1% (.002A) of the full load C.T. secondary current (.200A) is used in setting the power direction. The metering will be forward until the current exceeds the 1% threshold in the reverse direction. At this time, the various parameters assume new values as previously described, and the REV PWR annunciator turns on. The control continues metering in reverse until the current exceeds the 1% threshold in the forward direction, and then the parameter scaling reverts back to normal and the REV PWR annunciator turns off. If the source or differential P.T. is **not** installed, reverse metering will not be available, but all other metering operations remain the same.
OPERATION: The threshold for which the control switches **operation** is programmable at Function Code 57 over the range 1 to 5% of the rated C.T. secondary current. When the real component of the current is above this threshold, the control operates in the normal forward direction. When current falls below this threshold, all tap changing is inhibited. The control idles on the last tap position held before the threshold was crossed. The operational timer (time delay) is reset on any excursion below this threshold, and the band edge indicators turn off.

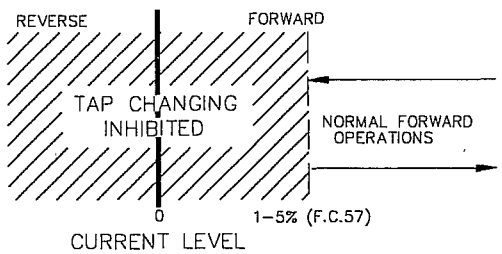

Figure 2-8
Reverse idle mode operation.

BI-DIRECTIONAL MODE - Function Code 56 = 3
Source P.T. is Required
METERING: A threshold level of 1% (.002A) of the full load C.T. secondary current (.200A) is used in setting the power direction. The metering will be forward until the current exceeds the 1% threshold in the reverse direction. At this time the various parameters assume new values as previously described, and the REV PWR annunciator turns on. The control continues metering in reverse until the current exceeds the 1% threshold in the forward direction, and then the parameter scaling reverts back to normal and the REV PWR annunciator turns off.
OPERATION: The control operates in the forward direction whenever the real component of the current is above the operator defined **forward** threshold (Function Code 57). The control operates in the reverse direction, using the reverse settings at Function Codes 51, 52, 53, 54 and 55, whenever the current is above the operator defined **reverse** threshold (Function Code 57). When the current is in the region between the two thresholds, the control idles on the last tap position held before the current fell below the threshold. The operational timer (time delay) is reset on any excursion below the threshold in either direction, and the band edge indicators turn off.

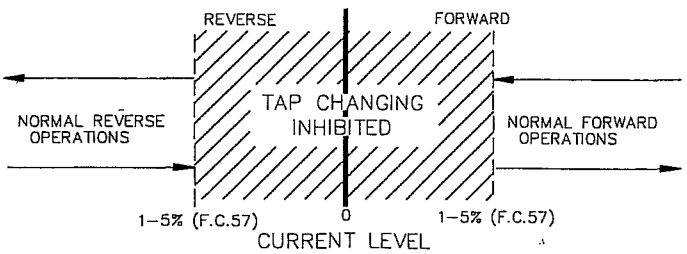

Figure 2-9
Bi-directional mode operation.

NEUTRAL IDLE MODE - Function Code 56 = 4
Source P.T. is Required
METERING: A threshold level of 1% (.002A) of the full load C.T. secondary current (.200A) is used in setting the power direction. The metering will be forward until the current exceeds the 1% threshold in the reverse direction. At this time, the various parameters assume new values as previously described, and the REV PWR annunciator turns on. The control continues metering in reverse until the current exceeds the 1% threshold in the forward direction, and then the parameter scaling reverts back to normal and the REV PWR annunciator turns off.
OPERATION: The control operates in the forward direction whenever the real component of the current is above the operation defined **forward** threshold (Function Code 57). When the current exceeds the operator defined **reverse** threshold (Function Code 57), and is held for 10 continuous seconds, the control will tap to neutral. Neutral position is determined as when the percent buck/boost is within ± .3% of 0. When the current is in the region between the two thresholds, the control idles on the last tap position held before the forward threshold was crossed. While tapping to the neutral position, if the current falls below the reverse threshold, the control continues to tap until neutral position is reached. The operational timer (time delay) is reset on any excursion below the forward threshold.

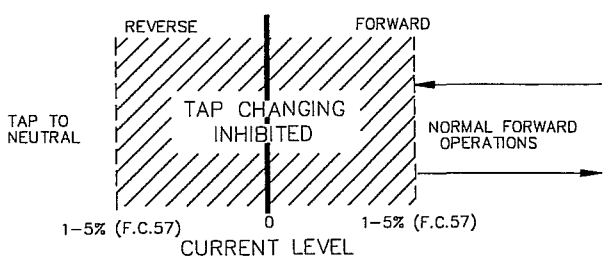

Fig. 2-10
Neutral idle mode operation.

CO-GENERATION MODE - Function Code 56 = 5
No Source P.T. is Required.
In recent years, there has been a growing number of voltage regulator applications involving co-generation by the utilities' customers. The co-generation mode was developed for the McGraw-Edison control to satisfy the specialized needs of these applications. Normally, the desired operation of a regulator installed on a feeder involving co-generation is to regulate the voltage at the customer during times of power flow **into** the customer site, and to regulate the voltage at the regulator (on the same output side) during power flow into the utility grid. This is accomplished by simply not reversing the control sensing input voltage when reverse power is detected, and by altering the line drop compensation settings to account for this change in power flow direction.

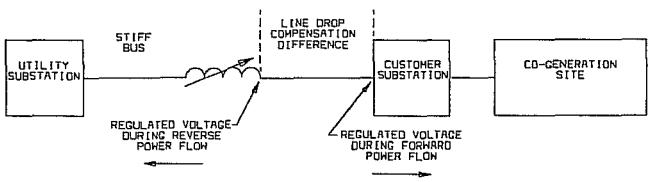

Figure 2-11
Co-generation regulation points.

METERING: Always operates in the forward direction except the load center voltage is calculated based upon the reverse line drop compensation settings (Function Codes 54 and 55), when the fixed 1% **reverse** metering threshold is exceeded. The REV PWR annunciator is turned on when this reverse threshold is crossed. The forward line drop compensation settings (Function Codes 4 and 5) are used when the current exceeds the fixed 1% **forward** metering threshold. The demand values acquired during reverse power flow are stored as reverse metered data but the values are not scaled (to reflect the other side of the regulator) since the operating direction of the regulator never truly reverses.

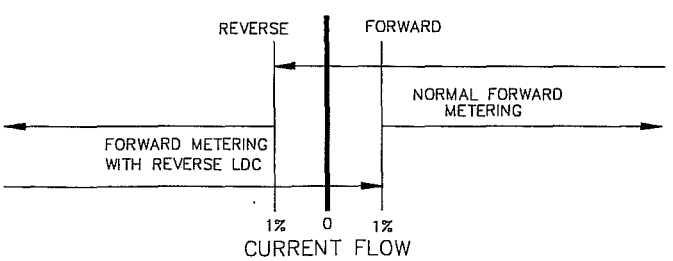

Figure 2-12
Co-generation metering.

OPERATION: The control operates in the forward direction whenever the real component of the current is above the operator defined **forward** threshold (Function Code 57). When the current exceeds the operator defined **reverse** threshold (Function Code 57), the control continues to operate in the forward direction using the forward settings for set voltage, bandwidth, and time delay, but uses the reverse settings for line drop compensation resistance and reactance. When the current is in the region between the two thresholds, the control idles on the last tap position held before the threshold was crossed, and the band edge indicators turn off. The operational timer (time delay) is reset on any excursion below either threshold.

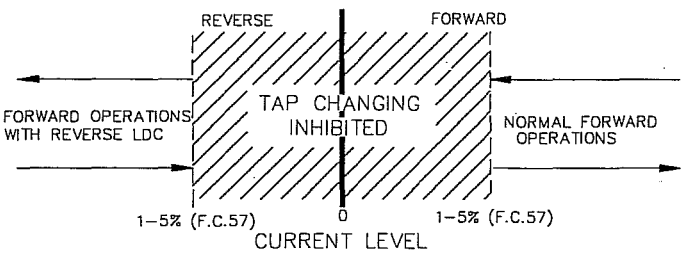

Figure 2-13
Co-generation mode operation.

Communications
The CL-4C Control has the facilities for two communications channels. One such channel is dedicated to the 9-pin D-subminiature connector located on the control front panel, labeled the "Data Port." The Data Port is designed to interface with the McGraw-Edison Data Reader—a handheld, battery-operated data gathering device (Figure 2-14). In five seconds, the Data Reader collects all the data contained in the CL-4C Control data base for later transfer to an IBM compatible personal computer. The Data Reader can read 100 such devices before its memory is filled to capacity. A simple command on the PC erases the Data Reader to permit another "read" cycle. This device and the PC-based software are available from Cooper Power Systems.

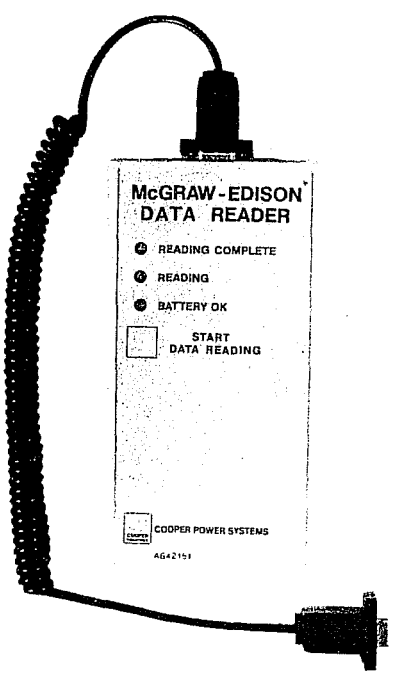

Figure 2-14
Data Reader.

The Channel #1 baud rate is selectable at 300, 1200, 2400, and 4800 BAUD. However, to permit communications with the McGraw-Edison Data Reader, the Channel 1 baud rate is set at the factory to 4800 BAUD.

Communications Channel #2 is dedicated to the real-time digital communications interface. Like other advanced controls developed by Cooper Power Systems, the CL-4C Control utilizes a point structure data base. This permits all parameters to be read, changed, or reset (as appropriate) through the SCADA system, thereby allowing the user to perform virtually any function remotely which might otherwise be done locally at the regulator front panel. **All** Cooper Power Systems advanced controls employ the same protocol for communications to the "outside world." This standard protocol is defined as DATA 2200, which is an 8-bit, character-oriented, asynchronous format, and is not proprietary.

The physical implementation of digital communications to the CL-4C is accomplished through an optional two board set consisting of a protocol converter module and a fiber optic transmitter/receiver module. The protocol converter mounts directly above the CL-4C main circuit board set (on the front panel) and plugs directly into it. Its primary function is to provide the "outside world" with a suitable communications interface to the CL-4C main control unit. The system is designed such that this module can be easily added in the field.

The fiber optic transmitter/receiver module mounts on the back panel of the control enclosure, and also can be field installed. It is connected to the protocol converter module through an eight conductor cable, and connects into the SCADA system via two ST bayonet style fiber optic transmitter and receiver connectors. The fiber optic communications medium was chosen because it has demonstrated clear superiority to traditional RS232 cabling in terms of electrical isolation and surge protection. To interface to an RTU RS232 port, a fiber optic-to-RS232 converter is used at the RTU. This device is also available from Cooper Power Systems.

Separate documents are available to describe the user information for these communications interface modules.

When a communications system is in place and active, it can perform all functions which the operator may perform at the front panel. To prevent the SCADA system from conflicting with local operator commands, several measures have been taken:

1) The SCADA system may be completely disabled by an ON/OFF switch located on the fiber optic module, on the control back panel. When the switch is OFF, the system is electrically disconnected from the CL-4C Control such that no READ, WRITE, or RESET commands can reach the control. However, if the control is in a loop system, the loop is maintained even with the switch OFF. NOTE: IF THE SCADA SYSTEM HAD PLACED THE CONTROL IN THE "INHIBIT TAP CHANGE" MODE, AUTOMATIC OPERATION WILL REMAIN INHIBITED UNLESS THE OPERATOR ACCESSES FUNCTION CODE 69 AND CHANGES THE STATE OF THIS CODE (FROM 1 TO 0). SEE FUNCTION CODE 69 DESCRIPTION ON PAGE 2-19.
2) The control switch on the CL-4C front panel must be placed in the AUTO/REMOTE position for remote tap change commands to be performed. If this switch is in either the OFF or MANUAL position, no tap changes can occur, but normal READ, WRITE, and RESET commands from the SCADA system can be performed.
3) When the local operator enters **any** security code (level 1, 2, or 3), the SCADA system is prevented from WRITING or RESETTING any CL-4C parameter. However, SCADA READ commands can occur under these conditions. When the security level is set back to "0," full SCADA control resumes. The security level is reset to "0" by either (1) turning the CL-4C display off, or (2) after 30 minutes to no keypad activity, the display automatically shuts off, and the security is set to "0" at that time.

The specific communications parameters are listed in function codes 60-69, and are described more fully in the function code section beginning on page 2-17. **NOTE: When any of the function codes affecting communications are changed via the keypad, the power to the CL-4C Control must be turned off, and then back on, to force these "new" communications parameters to be loaded into the optional protocol converter module.**

Voltage Reduction

An ideal application for system load management is at the distribution voltage regulator. Voltage reduction capabilities within the regulator control permit it to trigger the regulator to reduce voltage during situations where power demands surpass the available capacity, and where there are extraordinary peak loads. The CL-4 Control is unique in its offering of three modes of voltage reduction: LOCAL, REMOTE, and AUTOMATIC (with remote override). All modes operate for forward or reverse power flow conditions. Voltage reduction can be overridden by the operator taking local control, by an interconnected SCADA system, or by the voltage limiter accessory.

LOCAL - Function Code 70 = 1

Local (manual) voltage reduction can be performed by selecting the local mode of operation (Function Code 70 = 1), and then entering into Function Code 72 the amount of reduction required as a percentage of the set voltage. This has the effect of lowering the set voltage of the control by that percentage; i.e., the control now **regulates** to this reduced voltage level. When voltage reduction is occurring, regardless of the mode of activation (LOCAL, REMOTE, or AUTOMATIC), the V RED annunciator turns on, and the percentage of reduction taking place is available for display at Function Code 71.

Example: If the regulator is set for 123V voltage setting and 4.6% voltage reduction is required, set Function Code 70 = 1, and program Function Code 72 = 4.6. The regulator will tap down 5.7 volts (4.6% of 123V) immediately following the time delay period. The V RED annunciator will be on, and Function Code 71 will display 4.6%.

REMOTE - Function Code 70 = 2

The CL-4C Control offers three levels of remote voltage reduction which may be selected through two customer input terminals. This is accomplished by first setting Function Code 70 = 2 and then activating either input 1, input 2, or both inputs simultaneously. The percentage of reduction to be performed in each case is programmed into Function Codes 73, 74, and 75, for levels 1, 2, and 3, respectively. Each level is completely independent of the others.

The customer inputs for the remote voltage reduction are located on the control back panel (Fig. 1-17 on page 1-19) on TB2 and are identified as 1, 2, and "J" (common). Figure 2-15 illustrates the connection of customer contacts. "J" is normally connected to signal ground, but could be operated above ground. The voltage source to activate the remote inputs can be derived from TB2-V9, if desired. This terminal is at the nominal 127V motor potential when the control switch is set for AUTOMATIC. It is "off" for other positions of the control switch.

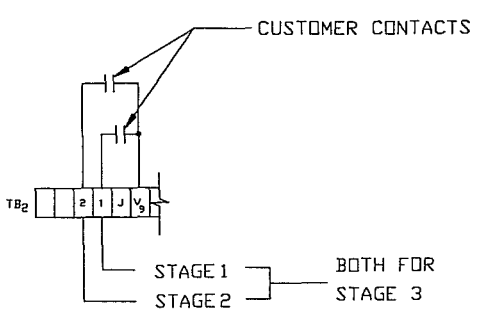

Figure 2-15
Voltage reduction customer contact points.

Example: If Function Code 73 = 2.0%, Function Code 74 = 5.0%, and Function Code 75 = 7.5%, then as input terminal 1 is activated, the regulator steps down 2.0% from the set voltage level of the control. The V RED annunciator turns on, and Function Code 71 will display 2.0% if interrogated.

If only input 2 is activated, the regulator steps down 5.0% (as entered at Function Code 74), and Function Code 71 will display 5.0%. If both inputs are held active, the regulator steps down an additional 2.5% (for a total of 7.5% as programmed at Function Code 75) and Function Code 71 will display 7.5%.

AUTOMATIC WITH REMOTE OVERRIDE - Func. Code 70 = 3

A new feature to the industry is automatically activated voltage reduction dependent upon load current. The CL-4C introduces this concept with **two** separately activated levels of reduction. As the load current exceeds the current percentage programmed into Function Code 78, voltage reduction of the percentage entered at Function Code 76, is performed. A second stage of voltage reduction is activated when the current percentage programmed into Function Code 79 is exceeded. **When this second (and presumably higher) current value is exceeded, the voltage reduction is the sum of the two levels at Function Codes 76 and 77.** Since the addition of the two levels could potentially add up to 20%, the control internally will limit the total to 10%. Once a reduction setting is activated, it remains active until the current falls below the turn-on threshold by 10%.

As with the other modes of voltage reduction, when active, the V RED annunciator turns on, and Function Code 71 will display the percentage of reduction in effect. Additionally, at Function Code 71, the display will indicate an "A" to distinguish the automatic mode from the remote mode of activation.

When **any** of the remote reduction inputs are turned on, the automatic mode will be overridden, and remote reduction then takes place according to the programmed percentage for the particular input(s).

The two current thresholds (Function Codes 78 and 79), are entered as a percentage of the **full load C.T. secondary current.** Some regulators utilize C.T.'s with primary ratings other than the full load rating of the regulator. In these instances, this ratio must be considered for accurately establishing the turn-on current.

Example 1: Desiring a turn-on threshold at 75% of the full load rating on a 418 amp regulator which uses a 500 amp C.T., calculate the percentage as follows: 418/500 x 75% = 63%. Enter 63 at Function Code 78 or Function Code 79.

Example 2: If a 200 amp regulator is programmed with these settings: Function Code 76 = 5.0%. Function Code 77 = 2.5%, Function Code 78 = 75%, Function Code 79 = 100%, then the control function will be as follows: At 150 amp load current, 5.0% of voltage reduction will occur (this would be 6V on a 120V setting). The V RED annunciator turns on, and Function Code 71 will display "A 5.0." If the load current continues to increase to 200 amps (the full load rating), an additional 2.5% of voltage reduction will occur, giving a total reduction of 7.5% (9V on a 120V setting).

Function Code 71 will now display "A 7.5." As the current flow is reduced to 180 amps (10% below level 2 current threshold), voltage reduction goes to 5.0%. When the load current falls below 135 amps (10% below level 1 current threshold), automatic voltage reduction is turned off.

Voltage Limiting

The voltage limiting accessory is used to place both a high and low limit on the output voltage of the regulator. When enabled, it operates in either the forward or reverse directions, and has the highest priority of all operating functions. Voltage limiting is overridden only by the operator taking LOCAL control, or by an interconnected SCADA system. The purpose of the voltage limiter is to protect the consumer from abnormal high or low voltages resulting from:

1. Abnormal loading of the feeder.
2. Inaccurate regulator control settings (voltage level, bandwidth, and line drop compensation)
3. Heavy loading by the first customer while there is a leading power factor on the feeder.
4. Light loading at the first customer with heavy loading on the feeder at the same time.

The appropriate high and low limits for the output voltage can be programmed into the CL-4C Control at Function Codes 81 and 82, respectively. The accessory is then activated by accessing Function Code 80 and entering the appropriate code for the desired operation: 0 = off, 1 = high-voltage limiting only, and 2 = both high and low limiting. If low-voltage limiting **only** is desired, Function Code 80 should be set for 2 to enable this limit, and the value programmed into Function Code 81 for the high limit can be set to some extreme number (such as 135) to prevent the high limit from activating.

The control has two response sensitivities. If the output voltage exceeds either the high or low limit by three volts or more, the CL-4C Control samples the voltage for two seconds and then taps immediately to bring the voltage to the limit value. If the output voltage exceeds either high or low limit by less than 3 volts, the CL-4C Control samples the voltage for 10 seconds then taps to bring the voltage to the limit value. The 10 second delay is used to prevent false responses to transient conditions. The control uses the sequential method of tapping, pausing two seconds between taps for voltage sampling, when bringing the voltage back to the limit value. HIGH and LOW annunciators in the display indicate when either limit is active.

A threshold of one-volt is used for both limiting values to establish a "grey zone" around the limits. When the output voltage is within this "grey zone", the control will not perform any tap changes which would take the output voltage closer to the limit. If the voltage is directly on the edge of the grey zone, the control will allow one tap change to permit the voltage to enter the zone by as much as 0.7 volts.

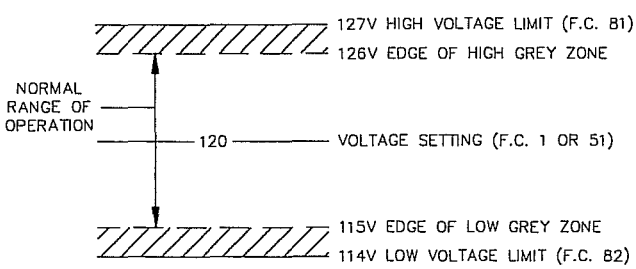

Figure 2-16
Voltage limiting grey zones.

SYSTEM PROTECTION

All CL-4C Control inputs (15) are protected with metal oxide varistors (MOVs) and capacitors to prevent damage from line surges and high-frequency transients. This protection concept has proven very effective in the surge tests conducted by Cooper Power Systems. Measures have also been taken in the software design to further enhance the CL-4C Control operation under adverse conditions. Orderly operation is ensured by MERTOS4, an operating system developed by Cooper Power Systems for microprocessor-based systems. There are four error detection software activities, overseen by MERTOS4, which are an inherent part of the normal operation:

1. The microprocessor architecture includes a COP (Computer Operating Properly) watchdog system to help protect against software failures. A watchdog reset sequence is executed on a periodic basis so that the watchdog timer is never allowed to time out. Should the software malfunction, the reset sequence will not be generated, and the COP will time out, causing the system to enter a diagnostic routine.
2. MERTOS4 continually polls the various software tasks to ensure that they are still operational. If an abnormality is encountered, MERTOS4 will cause the system to enter a diagnostic routine.
3. Throughout the unused memory space, commands are embedded which generate a system reset if executed. Should an event occur which causes the processor to run errantly into unused memory space, the system will immediately be directed to a diagnostic routine.
4. The settings programmed into the CL-4C Control non-volatile memory are stored in triplicate. This permits a voting scheme to occur as each parameter is accessed. If one of the three values does not match, the "different" value will be corrected to agree with the other two. This will also be counted as an EEPROM correction and the "number of EEPROM Corrections" (Function Code 93) will be increased by 1.

   If all three values are different, a "default" value (one that is chosen as a representative value and programmed into ROM), will be used for that particular parameter. If a setting parameter defaults, the "Number of Defaults" (Function Code 90) will be increased by 1. Additionally, when interrogated, the parameter(s) that defaulted will display a "d" preceding the value to indicate it is a default. The CL-4C Control will continue to operate using the default value(s).

Three parameters cannot default to a predetermined value because no logical choice is possible. The three parameters, Regulator Configuration (Function Code 41), System Line Voltage (Function Code 43), and P.T. Ratio (Function Code 44) will revert to an invalid status and will display dashes preceded by a "d." Anything dependent upon these values will cease to function, and Function 95 will display a "6" to represent invalid critical parameters.

DIAGNOSTICS

There are three events which force the CL-4C Control into the self-diagnostic routines: (1) The power is first turned on; (2) Operator entry of the Self-Test Mode (Function Code 91), or (3) MERTOS4 detects a software problem. Once the diagnostic routines are entered, the first action taken by the CL-4C Control is to light all segments of the display. This gives the operator an opportunity to observe the display for defective segments. Activities are performed as follows:

1. Non-volatile memory is checked to ensure all locations can be written to and erased;
2. The frequency detection circuitry is checked to verify a signal frequency between 45 and 65 Hz is being sampled;

3. The interrupt line to the processor is checked to verify that it is functional;
4. The multiplexor and analog-to-digital converter are checked to verify operation;
5. Critical parameters are checked to ensure validity;
6. The input/differential voltage channel is checked for the presence of a signal;
7. The output voltage channel is checked for the presence of a signal.

The duration of this test sequence is approximately 3 seconds. At completion, the display will indicate "PASS" or "FAIL," dependent upcn the test results. The "PASS" message will remain in the display until the operator makes an entry through the keypad, or 30 minutes if no keypad entry is made. After 30 minutes, the display will automatically be turned off.

The "FAIL" message remains in the display for approximately 15 minutes, then the diagnostic routines are executed again. The CL-4C Control will attempt to overcome the problem that disabled it by going through this process continually, until it receives operator attention. The specific problem identified is indicated by a number that is displayed at Function 95 (see page 2-23 for a description of these system codes).

Any system code other than "0" (all systems good), "6" (invalid critical parameters), or "7" (no input voltage), will require sending the CL-4C Control back to the factory for repair.

SECURITY SYSTEM

The security system implemented on the CL-4C Control is structured into four (4) levels. This permits selective access to the various parameters as dictated by the active security level. Three security access codes have been programmed into the CL-4C Control at the factory, but may be changed by the user according to Table 2-4. This information is also shown on the Function Code Sheet, bulletin 89024. Access into the system is accomplished simply by entering the appropriate security code at Function Code 99.

NOTE:
If the Level 3 Code is changed by the user, the new value should be recorded and kept in a safe place. Loss of this code means that security codes cannot be displayed or changed, diagnostic codes cannot be displayed or changed, and calibration cannot be performed. However, all Security Codes may be down-loaded to a Data Reader for analysis via special McGraw-Edison Data Reader Software.

SETTING THE CL-4C CONTROL FOR SERVICE

There are a a total of 41 parameters on the CL-4C Control which are user selectable. However, many of these values pertain to the operation of the accessories, and are **not** needed for normal regulator operations. This section aides in determining the correct values for the 10 settings needed for basic regulator operation. A full detailed description of each of the accessories is given in the ACCESSORY OPERATION section, page 2-25, along with set up instructions. The ten basic parameters are:

F.C.	PARAMETER	F.C.	PARAMETER
1	Set Voltage	41	Regulator Configuration
2	Bandwidth	42	Control Operating Mode
3	Time Delay	43	System Line Voltage
4	Line Compensation-Resistance	44	P.T. Ratio
5	Line Compensation-Reactance	45	C.T. Primary Rating

The control must be energized to perform the programming. This can be accomplished by applying 120-volts to the external source terminals and placing the power switch in the EXTERNAL position. Alternately, the regulator may be energized at line potential, and the control switch placed in the INTERNAL position. When power is applied to the control, all segments of the display will light, followed by a "PASS" indication. If the "FAIL" message is encountered, see the Diagnostics Section of this manual, page 2-31.

Before gaining access to change the control settings, the proper security level must be activated. This is accomplished by entering a security code at the Function Code 99 location. Depress the following keys on the keypad:

FUNCTION, 99, ENTER
12121, ENTER

The proper level of security to change operational settings has now been activated.

TABLE 2-4

SECURITY CODES

Security Level	Factory Programmed Code	User Definable Range	Functions Available at the Active Code
0	No Code Required	No Code Required	Read all parameters except diagnostics (Function Codes 93, 94, & 95) and security (Function Codes 96, 97, & 98.)
1	1234	1-9999	Read all parameters as described above, and reset all demands.
2	12121	10000-19999	Read all parameters as described above, reset all demands, and change any operational or setup parameter.
3	32123	20000-32766	Read all parameters and reset or change any parameter.

VR-32 Regulator and CL-4C Control

F. C.	PARAMETER	RANGE	FACTORY SETTING
1	SET VOLTAGE	100.0 135.0	120.0

The set voltage is the voltage level to which the control will regulate, on the 120-volt base. Since the CL-4C Control performs ratio correction in software, this value will normally be set for 120.0 volts unless it is desired to operate at a voltage level higher or lower than nominal. For proper operation, the ratio correcting transformer located on the control back panel must also be set for the correct tap as shown by the regulator nameplate.

Perform the following steps to program the set voltage into the CL-4C Control:

KEYS TO DEPRESS	DISPLAY	DESCRIPTION
1, ENTER	01 120.0	This is the set voltage as shipped from the factory.
CHANGE	01 ---.-C	Enter the desired value, example: 122.2
1222, ENTER	01 122.2	The set voltage is now 122.2 volts

F. C.	PARAMETER	RANGE	FACTORY SETTING
2	BANDWIDTH	1.0 6.0	2.0

The bandwidth is defined as that total voltage range, around the voltage setting, which the control will consider as a satisfied condition. As an example, a 2-V bandwidth on a 120-V setting means the operational timer will not activate until the voltage is below 119V or above 121V. When the voltage is in-band, the band edge indicators are off, and the timer (time delay) is off, so no relay closure can occur. Selection of a small bandwidth will cause more tap changes to occur, but will provide a more "tightly" regulated line. Conversely, a larger bandwidth results in fewer tap changes, but at the expense of better regulation. Selection of the bandwidth and time delay settings should be made recognizing the interdependence of these two parameters.

Perform the following steps to program the bandwidth into the CL-4C Control:

KEYS TO DEPRESS	DISPLAY	DESCRIPTION
2, ENTER	02 2.0	This is the bandwidth as shipped from the factory.
CHANGE	02 -.-C	Enter the desired value, example: 4.5
45, ENTER	02 4.5	The bandwidth is now 4.5 volts.

F. C.	PARAMETER	RANGE	FACTORY SETTING
3	TIME DELAY	5 180	30

The time delay is the period of time (in seconds) that the control waits, from the time when the voltage first goes out-of-band, to the time when relay closure occurs. If a rapid response is required, a smaller setting should be used. If several devices on the same line are to be coordinated, longer time delay settings may be required to allow the proper devices to operate in the desired sequence. Proceeding from the source, each device should have a longer time delay than the preceding device.

Perform the following steps to program the time delay into the CL-4C Control:

KEYS TO DEPRESS	DISPLAY	DESCRIPTION
3, ENTER	03 30	This is the time delay as shipped from the factory.
CHANGE	03 ---C	Enter the desired value, example: 49
49, ENTER	03 49	The time delay is now 49 seconds.

LINE COMPENSATION, RESISTANCE AND REACTANCE SETTINGS

Quite often regulators are installed some distance from the theoretical load center (the location at which the voltage is to be regulated). This means the load will not be served at the desired voltage level due to the losses (voltage drop) on the line between the regulator and the load. Furthermore, as the load increases, line losses also increase, causing the lowest voltage condition to occur during the time of heaviest loading.

To provide the regulator with the capability to regulate at a "projected" load center, manufacturers incorporate line drop compensation elements in the controls. This circuitry usually consists of a current source (C.T.), which produces a current proportional to the load current, and resistive (R) and reactive (X) elements through which this current flows. As the load increases, the resulting C.T. current flowing through these elements produces voltage drops which simulate the voltage drops on the primary line.

For the CL-4C Control, the input current is sampled and is used in a computer algorithm which **calculates** the respective resistive and reactive voltage drops based upon the line drop compensation values, programmed into the control at Function Codes 4 and 5 (or Function Codes 54 and 55). This is by far a more accurate and economical means of developing the compensated voltage.

To select the proper R and X values, the user must know several factors about the line being regulated. See reference document R225-10-1 for assistance in this determination.

F. C.	PARAMETER	RANGE	FACTORY SETTING
4	LINE COMPENSATION, RESISTANCE	-24.0 24.0	0.0

Perform the following steps to program the resistive compensation into the CL-4C Control.

KEYS TO DEPRESS	DISPLAY	DESCRIPTION
4, ENTER	04 0.0	This is the resistive compensation as shipped from the factory.
CHANGE	04 --.-C	Enter the desired value, example: 8.5
85, ENTER	04 8.5	The resistive compensation is now 8.5 volts.

F. C.	PARAMETER	RANGE	FACTORY SETTING
5	LINE COMPENSATION, REACTANCE	-24.0 24.0	0.0

Perform the following steps to program the reactive compensation into the CL-4C:

KEYS TO DEPRESS	DISPLAY	DESCRIPTION
5, ENTER	05 0.0	This is the reactive compensation as shipped from the factory.
CHANGE	05 --.-C	Enter the desired value, example: 3.5
35, ENTER	05 3.5	The reactive compensation is now 3.5 volts.

F. C.	PARAMETER	RANGE	FACTORY SETTING
41	REGULATOR CONFIGURATION	0 2	0

The CL-4C Control is designed to operate on wye-connected and delta-connected 3-phase systems. Regulators connected line-to-ground (wye) develop potentials and currents suitable for direct implementation in the CL-4C Control. Regulators connected line-to-line (delta) develop a potential-to-current phase shift which is dependent upon whether the regulator is defined as leading or lagging. This phase shift must be known by the CL-4C Control to permit accurate calculations for correct operation. This is accomplished by entering the proper code: 0 = Wye 1 = Delta Lagging 2 = Delta Leading.

See reference document R225-10-1 for an explanation of how to determine whether the regulator is leading or lagging.

Perform the following steps to program the regulator configuration into the CL-4C Control:

KEYS TO DEPRESS	DISPLAY	DESCRIPTION
FUNCTION, 41, ENTER	41 0	This is the regulator configuration as shipped from the factory.
CHANGE	41 -C	Enter the desired value, example: 1
1, ENTER	41 1	The regulator configuration is now delta lagging.

F. C.	PARAMETER	RANGE	FACTORY SETTING
42	CONTROL OPERATING MODES	0 2	0

Cooper Power Systems is the only manufacturer that offers a selection of three modes in which the control responds to out-of-band conditions. This permits the user to select the mode that best fits the application. These modes and their corresponding codes are: 0 = Sequential, 1 = Time Integrating, 2 = Voltage Averaging

SEQUENTIAL

This is the standard mode of response, incorporated on all McGraw-Edison CL-series Regulator Controls. When the load voltage goes out-of-band, the time delay circuit is activated. At the end of the time-out, a tap change is initiated. After each tap change, a 2-second pause occurs to permit the control to sample the voltage again. This sequence continues until the voltage is brought into band, at which time the timing circuit is reset. Any time the voltage goes in-band, the timer is reset.

TIME INTEGRATING

When the load voltage goes out-of-band, the time delay circuit is activated. At the end of the time-out, a tap change is initiated. After each tap change, a 2-second pause occurs to permit the control to sample the voltage again. If the voltage is still out-of-band, another tap change is performed. This sequence continues until the voltage is brought into band. When the voltage goes in-band, the timer is decremented at the rate of 1.1 seconds for every second elapsed, until it reaches zero.

VOLTAGE AVERAGING

When the load voltage goes out-of-band, the time delay circuit is activated. During this time delay period, the microprocessor monitors and averages the instantaneous load voltage. It then computes the number of tap changes required to bring the average voltage back to the set voltage level. When the time delay period is complete, the computed number of tap changes are performed without any delay between them, up to a maximum of five (5) consecutive tap changes, to avoid an accumulative error. The timer is not reset on voltage excursions in-band unless the voltage stays in-band for at least 10 continuous seconds. An error-averaging characteristic is inherent with the voltage averaging mode.

NOTE:

To permit sufficient time for the microprocessor to average the voltage, the time delay period must be 30 seconds or longer. If the time delay is set for less than 30 seconds, the control ignores the setting and uses 30 seconds.

Perform the following steps to program the control operating mode into the CL-4C Control:

KEYS TO DEPRESS	DISPLAY	DESCRIPTION
FUNCTION, 42, ENTER	42 0	This is the control operating mode as shipped from the factory.
CHANGE	42 -C	Enter the desired value, example: 2
2, ENTER	42 2	The control operating mode is now Voltage Averaging.

F. C.	PARAMETER	RANGE	FACTORY SETTING
43	SYSTEM LINE VOLTAGE	2400 36000	REGULATOR RATED VOLTAGE

The CL-4C Control performs ratio correction in software, and, consequently, the primary voltage must be entered for the control to perform this calculation. This value is simply the single phase voltage supplied across the S and SL terminals. Regulators shipped from the factory are usually set for the rated voltage, and this value is programmed into the control.

KEYS TO DEPRESS	DISPLAY	DESCRIPTION
FUNCTION, 43, ENTER	43 7200	This is the system voltage for 7200-V regulator.
CHANGE	43 -----C	Enter the desired value, example: 4160
4160, ENTER	43 4160	The system line voltage is now 4160 volts.

F. C.	PARAMETER	RANGE	FACTORY SETTING
44	P.T. RATIO	20.0 300.0	RATIO FOR REGULATOR RATING

Since the CL-4C Control performs ratio correction in software, the P.T. ratio for the voltage sensing supply must be entered for the control to perform this calculation. The ratio to be programmed in the CL-4C Control is the OVERALL POT RATIO, as shown on the regulator nameplate for every applicable system voltage for the particular regulator. This value includes the correction performed by the ratio correcting transformer (RCT) on the control back panel. The voltage from the RCT is normally corrected to 120 volts. However, in the instance in which this voltage is other than 120 volts, **the CL-4C Control will define the particular input voltage as the 120V base voltage, and 120V will be displayed at Function Code 6. The voltage test terminals will continue to show the voltage as applied to the control from the RCT.**

Perform the following steps to program the P.T. ratio into the CL-4C Control:

KEYS TO DEPRESS	DISPLAY	DESCRIPTION
FUNCTION, 44, ENTER	44 60.0	This is the P.T. ratio for a 7620 volt regulator set at 7200V.
CHANGE	44 ---.-C	Enter the desired value, example: 34.7
347, ENTER	44 34.7	The P.T. ratio is now 34.7:1.

F. C.	PARAMETER	RANGE	FACTORY SETTING
45	C.T. PRIMARY RATING	25 2000	C.T. RATING FOR THE REGULATOR

The CL-4C is designed for 200 mA as the rated C.T. current, and will meter to 400 mA (200% load) with no loss of accuracy. Ratio correction is performed by the software, and consequently, the C.T. primary rating must be entered. The C.T. primary rating is available on the regulator nameplate. **Example:** If a C.T. ratio of 400/0.2 is indicated on the nameplate, then 400 must be entered at Function Code 45. Table 2-5 summarizes the C.T. primary ratings for all standard regulator ratings.

Perform the following steps to program the C.T. primary rating into the CL-4C Control:

KEYS TO DEPRESS	DISPLAY	DESCRIPTION
FUNCTION, 45, ENTER	45 200	This is the C.T. primary rating for a 200A regulator.
CHANGE	45 ----C	Enter the desired value, example: 400
400, ENTER	45 400	The C.T. primary rating is now 400 amps.

Table 2-5
Current Transformer Applications.

Regulator Current Ratings	C.T. Primary Current
25 50 75	25 50 75
100 150 167, 200	100 150 200
219, 231, 250 289, 300 328, 334, 347, 400	250 300 400
418, 438, 463, 500 548, 578, 656, 668 833, 875, 1000, 1093	500 600 1000
1332, 1665	1600

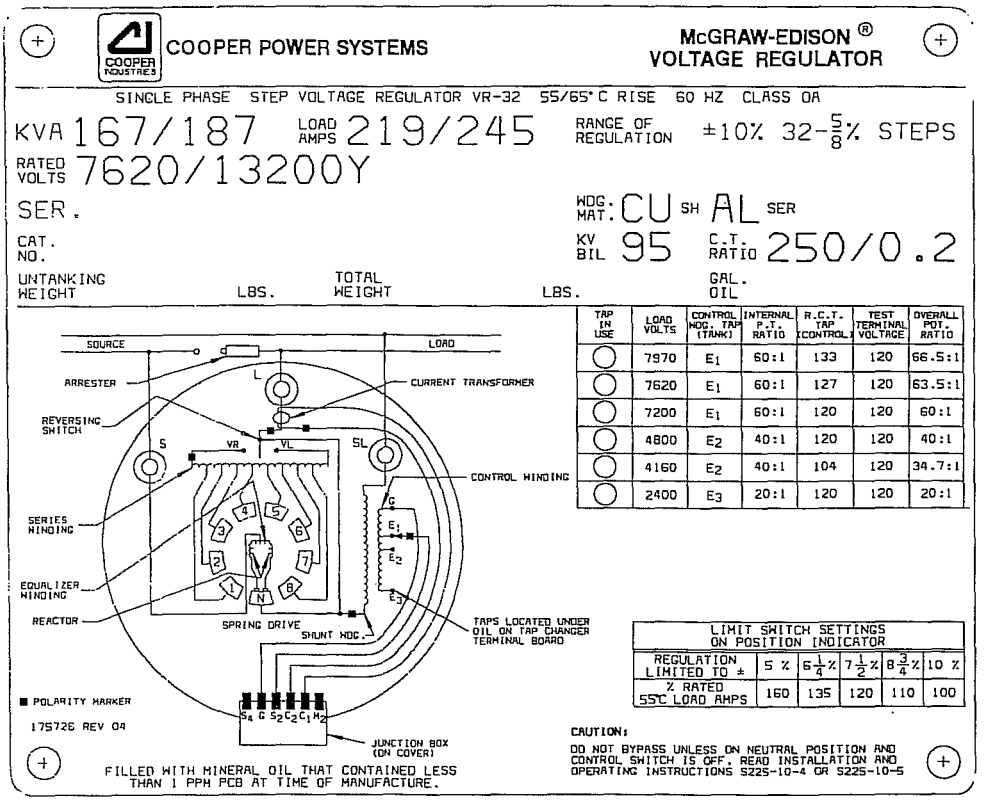

TAP IN USE	LOAD VOLTS	CONTROL WDG. TAP (TANK)	INTERNAL P.T. RATIO	R.C.T. TAP (CONTROL)	TEST TERMINAL VOLTAGE	OVERALL POT. RATIO
○	7970	E_1	60:1	133	120	66.5:1
○	7620	E_1	60:1	127	120	63.5:1
○	7200	E_1	60:1	120	120	60:1
○	4800	E_2	40:1	120	120	40:1
○	4160	E_2	40:1	104	120	34.7:1
○	2400	E_3	20:1	120	120	20:1

Figure 2-17
Nameplate without Differential P.T. installed.

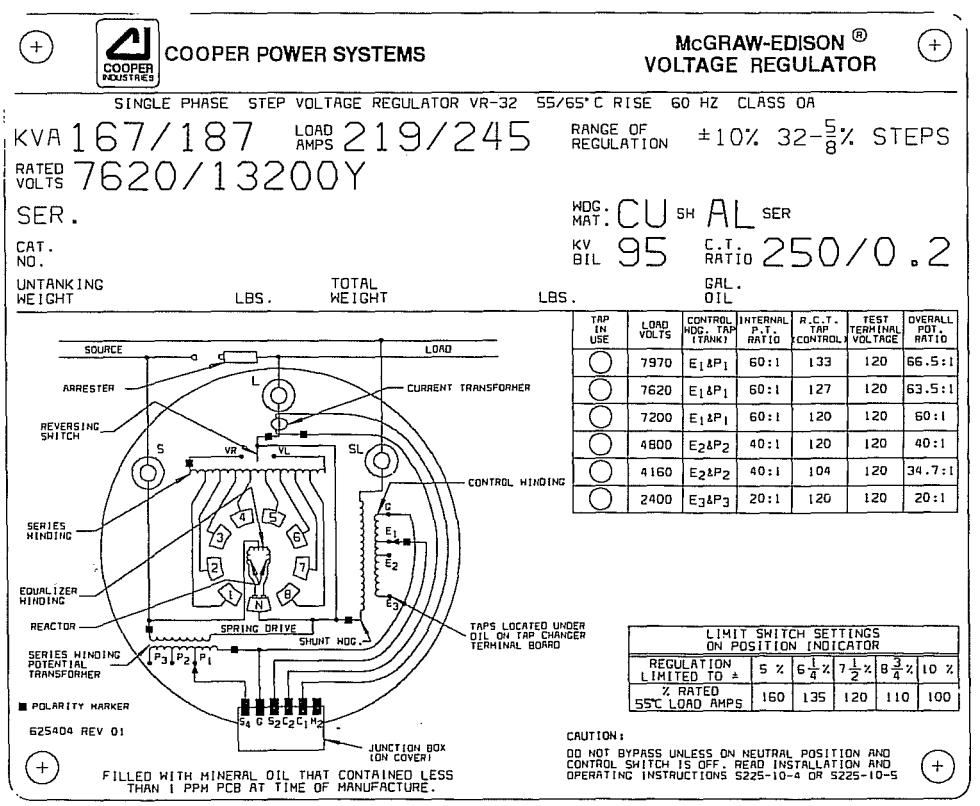

TAP IN USE	LOAD VOLTS	CONTROL WDG. TAP (TANK)	INTERNAL P.T. RATIO	R.C.T. TAP (CONTROL)	TEST TERMINAL VOLTAGE	OVERALL POT. RATIO
○	7970	E_1&P_1	60:1	133	120	66.5:1
○	7620	E_1&P_1	60:1	127	120	63.5:1
○	7200	E_1&P_1	60:1	120	120	60:1
○	4800	E_2&P_2	40:1	120	120	40:1
○	4160	E_2&P_2	40:1	104	120	34.7:1
○	2400	E_3&P_3	20:1	120	120	20:1

Figure 2-18
Nameplate with Differential P.T. installed.

CONTROL SYSTEM DESIGN AND OPERATION

This section describes the CL-4C Control design and operation. The overall control system schematic is shown in Figure 2-19. This is described in segments to aid in the understanding of the VR-32 regulator with the CL-4C Control.

DF — DIFFERENTIAL VOLTAGE FUSE
DHR — DRAG HAND RESET
EST — EXTERNAL SOURCE TERMINALS
HSL — HOLDING SWITCH LOWER
HSR — HOLDING SWITCH RAISE
IRS — INDICATOR RESET SOLENOID (POSITION INDICATOR)
JBB — JUNCTION BOX TERMINAL BOARD ON THE COVER
LLS — LOWER LIMIT SWITCH (POSITION INDICATOR)
MC — MOTOR CAPACITOR
MF — MOTOR FUSE
MOV — METAL OXIDE VARISTOR
NL — NEUTRAL LIGHT
NLC — NEUTRAL LIGHT CAPACITOR
NLS — NEUTRAL LIGHT SWITCH
PD — POTENTIAL OPENING DEVICE
PF — PANEL FUSE
PS — POWER SWITCH
RCT — RATIO CORRECTION TRANSFORMER
RLS — RAISE LIMIT SWITCH (POSITION INDICATOR)
SD — CURRENT SHORTING DEVICE
TB — CONTROL TERMINAL BOARD
TCB — TAP CHANGER TERMINAL BOARD
VDIFF — DIFFERENTIAL VOLTAGE
VM — MOTOR VOLTAGE
VS — SENSING VOLTAGE
VTT — VOLTAGE TEST TERMINALS

NOTES:

1. PORTIONS OF SCHEMATIC SHOWN IN DOTTED ENCLOSURE ARE LOCATED IN REGULATOR TANK.

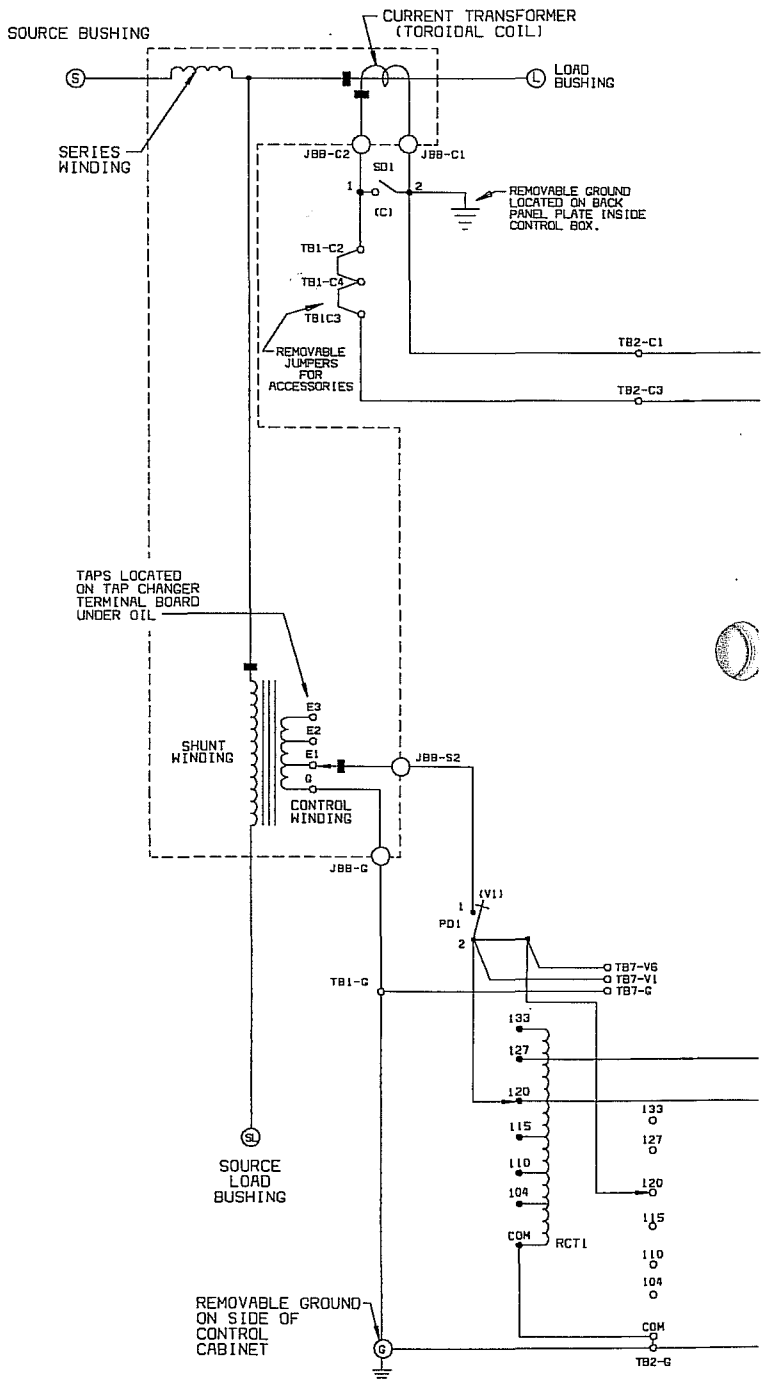

Figure 2-19
VR-32 regulator and CL-4C control wiring diagram.

S225-10-4C

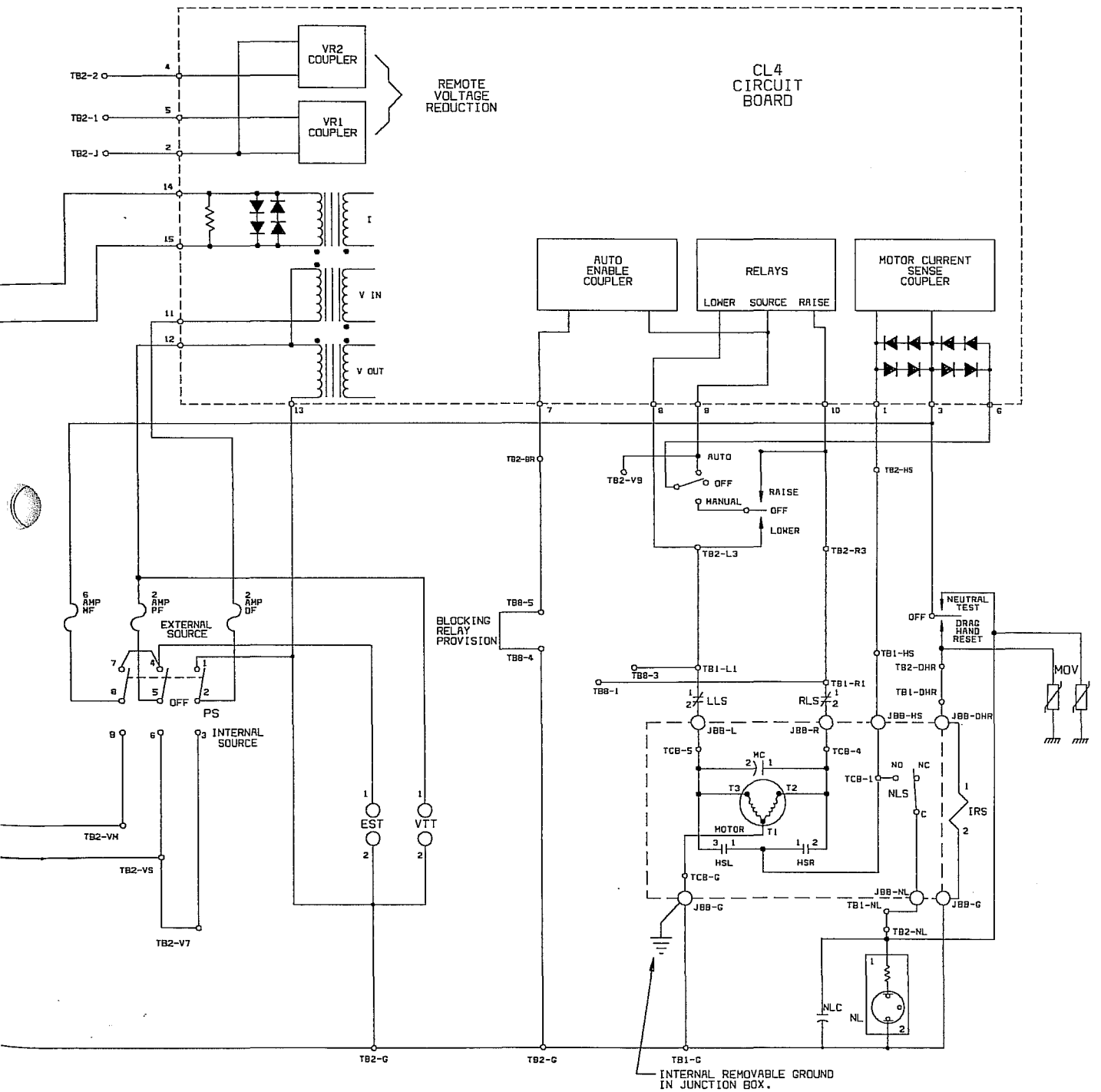
CL4
CIRCUIT
BOARD
REMOTE
VOLTAGE
REDUCTION
VR2
COUPLER
VR1
COUPLER
TB2-2
TB2-1
TB2-J
AUTO
ENABLE
COUPLER
RELAYS
LOWER SOURCE RAISE
MOTOR CURRENT
SENSE
COUPLER
V IN
V OUT
AUTO
OFF
MANUAL
RAISE
OFF
LOWER
TB2-V9
TB2-L3
TB2-R3
TB2-HS
TB2-BR
6 AMP MF
2 AMP PF
2 AMP DF
EXTERNAL SOURCE
OFF
PS
INTERNAL SOURCE
TB2-VH
TB2-VS
TB2-V7
EST
VTT
BLOCKING RELAY PROVISION
TB8-5
TB8-4
TB8-3
TB8-1
TB1-L1
TB1-R1
LLS
RLS
JB8-L
JB8-R
TCB-5
TCB-4
MC
T3
T2
T1
MOTOR
HSL
HSR
TCB-G
JB8-G
TB2-G
TB1-C
NEUTRAL TEST
DRAG HAND RESET
TB1-HS
TB2-DHR
TB1-DHR
JB8-HS
JB8-DHR
MOV
TCB-1
NO
NC
NLS
IRS
JB8-NL
TB1-NL
TB2-NL
NLC
NL
INTERNAL REMOVABLE GROUND
IN JUNCTION BOX.

VR-32 Regulator and CL-4C Control

DF — DIFFERENTIAL VOLTAGE FUSE
DHR — DRAG HAND RESET
EST — EXTERNAL SOURCE TERMINALS
HSL — HOLDING SWITCH LOWER
HSR — HOLDING SWITCH RAISE
IRS — INDICATOR RESET SOLENOID (POSITION INDICATOR)
JBB — JUNCTION BOX TERMINAL BOARD ON THE COVER
LLS — LOWER LIMIT SWITCH (POSITION INDICATOR)
MC — MOTOR CAPACITOR
MF — MOTOR FUSE
MOV — METAL OXIDE VARISTOR
NL — NEUTRAL LIGHT
NLC — NEUTRAL LIGHT CAPACITOR
NLS — NEUTRAL LIGHT SWITCH
PD — POTENTIAL OPENING DEVICE
PF — PANEL FUSE
PS — POWER SWITCH
RCT — RATIO CORRECTION TRANSFORMER
RLS — RAISE LIMIT SWITCH (POSITION INDICATOR)
SD — CURRENT SHORTING DEVICE
TB — CONTROL TERMINAL BOARD
TCB — TAP CHANGER TERMINAL BOARD
vDIFF — DIFFERENTIAL VOLTAGE
VM — MOTOR VOLTAGE
VS — SENSING VOLTAGE
VTT — VOLTAGE TEST TERMINALS

NOTES:
1. PORTIONS OF SCHEMATIC SHOWN IN DOTTED ENCLOSURE ARE LOCATED IN REGULATOR TANK.

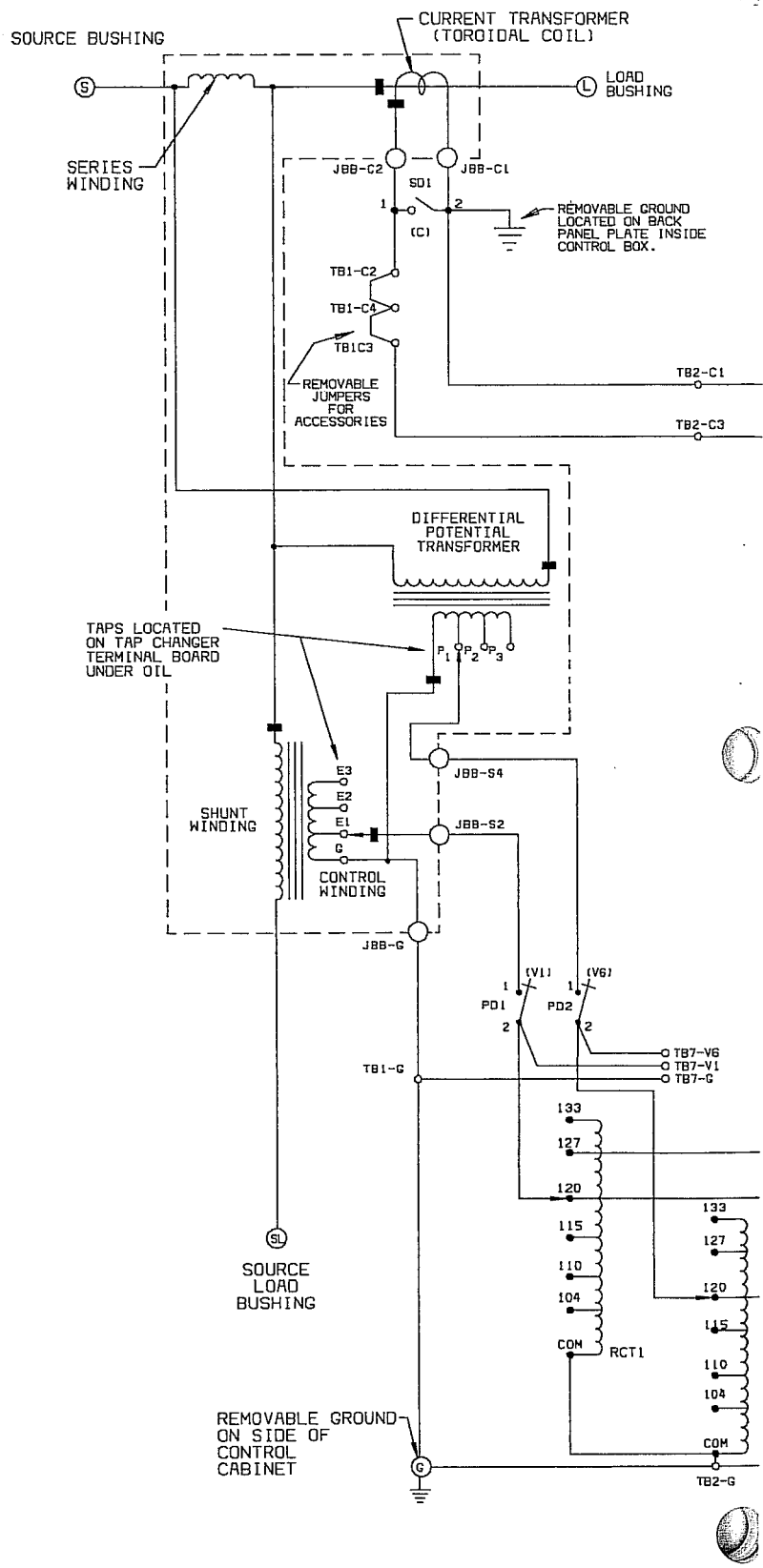

Figure 2-20
VR-32 regulator and CL-4C Control with Differential P.T. wiring diagram.

S225-10-4C

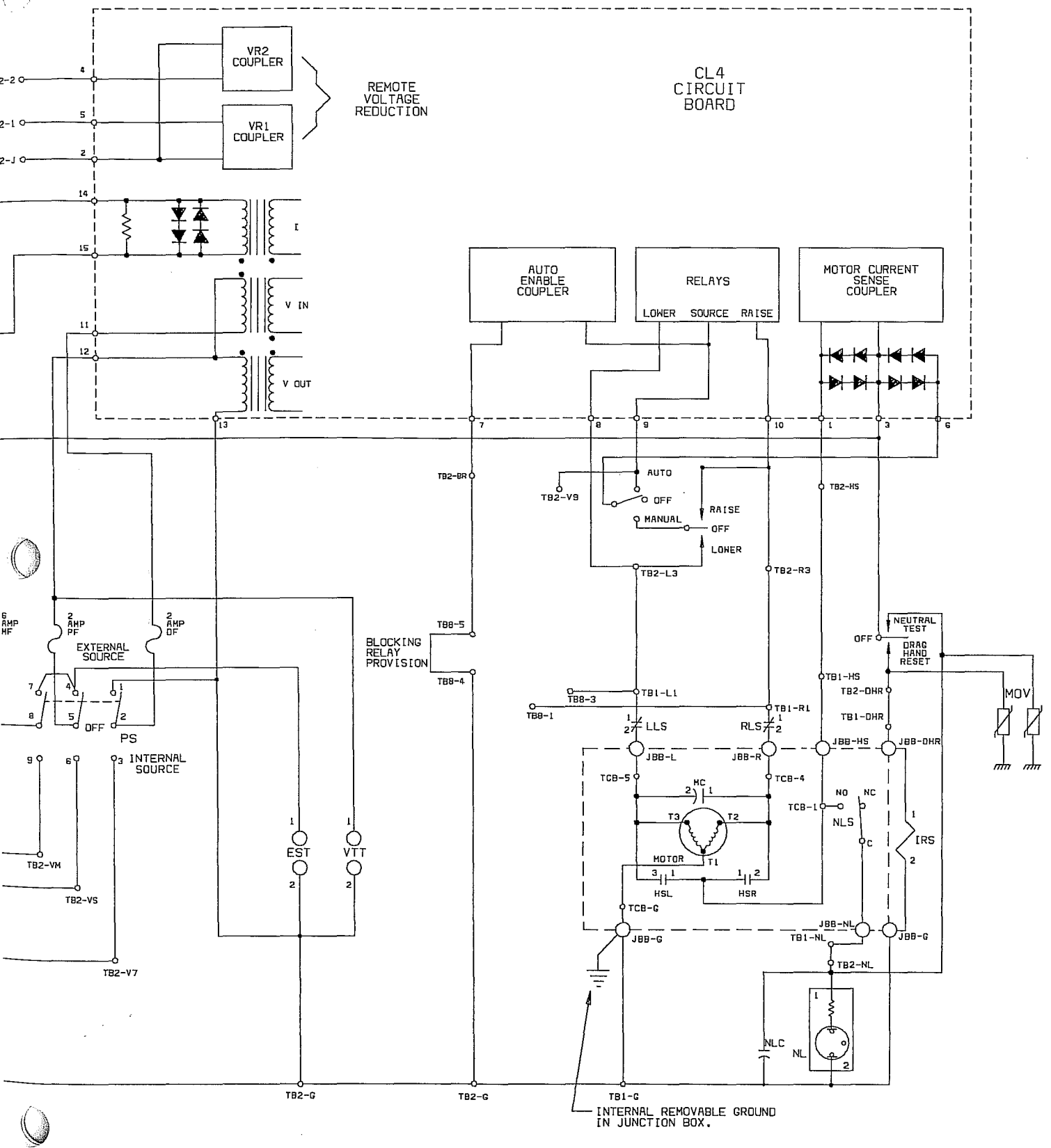
CL4
CIRCUIT
BOARD
VR2
COUPLER
VR1
COUPLER
REMOTE
VOLTAGE
REDUCTION
V IN
V OUT
AUTO
ENABLE
COUPLER
RELAYS
LOWER SOURCE RAISE
MOTOR CURRENT
SENSE
COUPLER
AUTO
OFF
MANUAL
RAISE
OFF
LOWER
TB2-V9
TB2-BR
TB2-L3
TB2-R3
TB2-HS
EXTERNAL
SOURCE
PS
INTERNAL
SOURCE
TB2-VM
TB2-VS
TB2-V7
BLOCKING
RELAY
PROVISION
TB8-5
TB8-4
TB8-3
TB8-1
TB1-L1
TB1-R1
LLS
RLS
JBB-L
JBB-R
TCB-5
TCB-4
HC
T3
T2
T1
MOTOR
HSL
HSR
TCB-G
JBB-G
NEUTRAL
TEST
OFF
DRAG
HAND
RESET
TB1-HS
TB2-DHR
TB1-DHR
JBB-HS
JBB-DHR
MOV
NO
NC
TCB-1
NLS
IRS
JBB-NL
TB1-NL
TB2-NL
NLC
NL
EST
VTT
TB2-G
TB2-G
TB1-G
INTERNAL REMOVABLE GROUND
IN JUNCTION BOX.

Voltage Circuits

All McGraw-Edison VR-32 regulators have provisions for operation at system voltages lower than the nameplate rating, as illustrated by Table 2-1, page 2-4. This is accomplished by providing a voltage-sensing potential winding with taps which roughly correspond to the appropriate system voltages. This source may be either a winding on the main core/coil assembly, or a separate potential transformer located on the output (load) side of the regulator. The taps from this source are brought to a terminal board located on top of the tap changer assembly, under oil (see Figure 2-21). The connections are made with push-on terminals and are easily accessed through the handhole.

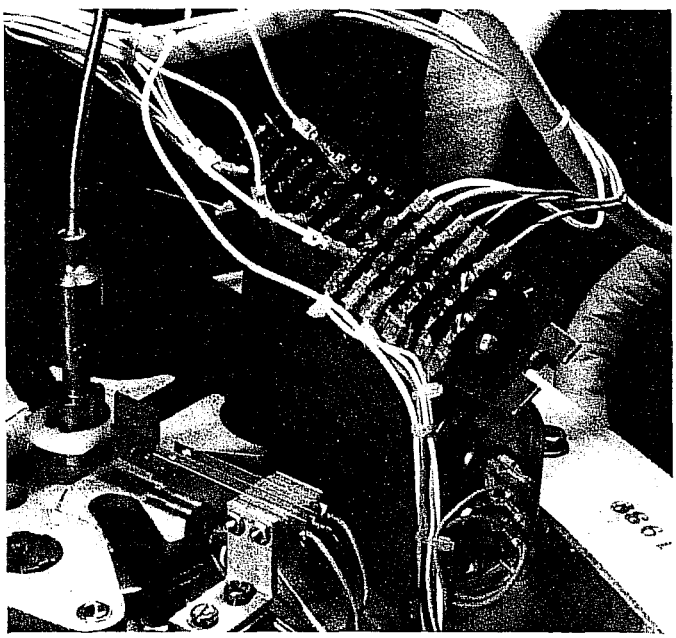

Figure 2-21
Internal tap terminals.

The tapped potential winding cannot always provide adjustment of the voltage fine enough for control purposes. A tapped autotransformer is therefore used for fine voltage adjustment. This transformer is referred to as the Ratio Correcting Transformer (RCT) and has taps at 104, 110, 115, 120, 127, 133 volts. It is located on the back panel in the control enclosure (see Figure 2-22). To operate a regulator on a system other than its rating, the appropriate selection must be made for the internal tap and RCT tap, and the CL-4C Control must be programmed properly at Function Code 43 (System Line Voltage) and Function Code 44 (P.T. Ratio). The nameplate always provides all these values for the common system voltages which are applicable for the particular regulator (see Figure 2-17, page 2-36). This is discussed in detail in section titled, "SETTING THE CL-4C CONTROL FOR SERVICE," page 2-32.

The voltage developed by the sensing winding is brought from the tap changer terminal board to the junction box terminal board through the control cable, into the enclosure, and terminates at the knife switch labeled V_1. Opening this knife switch provides a visible means of removing all power to the control and back panel, thus allowing the operator to work safely on the control circuitry while the regulator is energized. From the knife switch, the voltage is ratio corrected by the RCT as previously described. Note, also, that a separation of sensing and motor circuits occurs at this transformer. The motor circuit is routed directly to the control front

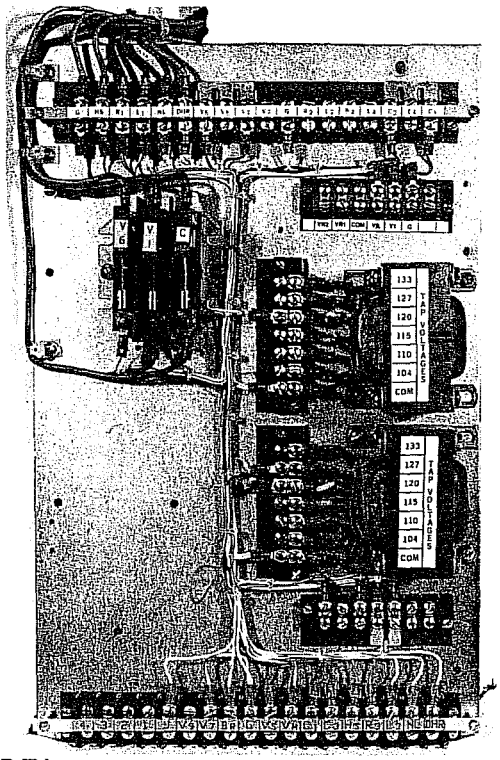

Figure 2-22
Back panel
(with optional P.T.)

panel, whereas the sensing potential is brought back to the top terminal strip through a series of removable jumpers, and then to the front panel. This scheme allows for the complete interchangeability with all the prior CL-series Controls and accompanying accessories.

Applications involving reverse power flow will have a second voltage source installed internal to the regulator to develop the "source-side" regulator voltage, which is needed during reverse operation. A differential P.T. is utilized on McGraw-Edison Regulators for measuring the voltage across the series winding, which is then used to develop the source-side voltage. The differential P.T. will have taps similar to the output voltage P.T. These taps are also located on the tap changer terminal board. The potential is then brought directly to the knife switch labeled V_6, and then passes through a second RCT for ratio correction (similar to that performed for V_1). The ratio differential V_6 voltage, now labeled V_7, is then routed to the control front panel.

On the front panel, the three potentials (Vs, sensing voltage; V_7, differential voltage; Vm, motor voltage) are all brought directly to the power switch. (The normal application would **not** have the V_7 differential voltage installed. In these cases, the V_7 terminal is connected to the Vs terminal on the control back panel, and the CL-4C Control software then recognizes that the V_7 voltage is not present.)

The power switch has three positions: INTERNAL-OFF-EXTERNAL. The INTERNAL position powers the control from the regulator sensing winding, and the EXTERNAL position permits an external 120V supply be used to operate the tap changer and control. When the power switch is in the external position, the internal supply is disconnected to prevent accidentally energizing the high voltage winding and bushings. The external source terminals are prominently located adjacent to the voltmeter test terminals. The voltmeter terminals allow the monitoring of the voltage that is applied to the circuit board, which is the voltage output from the RCT and the voltage displayed at Function Code 47 on the CL-4C Control.

The three voltage circuits are routed from the power switch to the respective 6A motor fuse, 2A panel fuses, and 2A differential voltage fuse. From the fuse, the motor potential provides power to the auto/manual selector switch, the drag hand reset solenoid, the neutral light, and the holding switch (alternate motor source) circuits. The sensing voltage and differential voltage are connected directly to their respective circuit board input terminals.

Current Circuit

All VR-32 regulators are designed with an internal current transformer to provide a current source for the line drop compensation calculations and for metering functions. Table 2-5 provides the application information for the various C.T.'s used on the McGraw-Edison regulators. These C.T.'s provide 200 mA rated secondary output for the full load C.T. primary current.

The current developed by the C.T. is brought to the junction box terminal board, through the control cable, into the enclosure, and terminates at the knife switch labeled C. Closing the knife switch provides a visible means of shorting the C.T., thus allowing the operator to work safely on the current circuitry. (For additional safety measures, the V_1 and V_6 knife switch should also be opened.)

At this knife switch, one side of the C.T. is connected to the equipment ground, and is also routed to the front panel for termination on the circuit board. The "high" side of the current circuit is brought to the top terminal board through a series of removable jumpers and then to the front panel for connection to the circuit board. Once this current signal is delivered to the circuit board, it is transformed into a voltage signal and converted into a digital format for processing.

Motor Circuit

The motor circuit power is brought from the 6A fuse to the circuit board through a set of back-to-back diodes to the AUTO/MANUAL selector switch. When this switch is set for automatic operation, motor power is applied to the relays. An appropriate relay closure then applies this power to the tap changer motor, after first passing through the limit switch contacts in the position indicator. When the switch is set for manual operation, the power is transferred to the momentary toggle switch labeled RAISE-LOWER. By actuating this switch in one direction or the other, power is applied through the limit switch contacts, directly to the tap changer motor, completely bypassing the circuit board.

Also included as a part of the motor circuit is an "alternate feed" to the motor called the "holding switch circuit." Located on the tap changer is a single-pole, double-throw switch, which is driven by a cam operated off of the tap changing mechanism. Motor rotation closes this switch (one direction or the other), and establishes a complete circuit for motor current until the rotation is complete and the cam drops out. During the time the holding switch is closed, motor current is drawn through an input on the circuit board which permits the control to detect that a tap change is in process. The microprocessor uses this information in its decision making process, as described in the following section.

Two other unassociated circuits which share the 6A motor source are the drag hand reset and neutral light circuits. The drag hand reset function is accomplished simply by operating a momentary toggle switch which applies power to the reset solenoid in the position indicator. The neutral light is similarly actuated for test purposes and it is also energized from a neutral light switch (located on the tap changer) when in the neutral tap position.

Control Operation

Automatic

In the automatic mode of operation, the power switch will be set on INTERNAL, and the control switch will be placed on AUTO. The regulator is assumed energized from the primary circuit. If the sequential mode of operation is selected (the standard mode), the control response is as follows:

1. As the primary voltage moves to a level which represents an out-of-band condition, the sensing voltage will correspondingly reflect the same results on the 120V base. Assuming the voltage dropped low, a lower than nominal signal will appear at the printed circuit board input, terminals 12 and 13.
2. The signal is transformed and converted into a digital format for use by the microprocessor.
3. The microprocessor, recognizing the voltage condition as low and out-of-band, issues an output which activates the "LOW" band indicator in the display, and starts an internal timer which is equivalent to the time delay setting.
4. During the time-out period, the voltage is continually sensed and sampled. Should the voltage momentarily move into band, the timer is reset.
5. At the end of the time delay period, the microprocessor issues an output which causes the "RAISE" relay coil to be energized.
6. The tap changer motor begins to turn as a result of the relay closure, and a cam on the tap changer closes the "RAISE" holding switch. This now provides an alternate source for the motor current, which passes through the input terminals 1 and 3 on the circuit board.
7. The microprocessor now recognizes that current is flowing in the holding switch circuit, and performs two actions: (1) the operations counter is incremented, and (2) the RAISE relay is de-energized, thus opening its contacts.
8. As a result of the relay contacts opening, the motor current is now carried solely by the holding switch circuit. When the motor rotation is complete, the holding switch opens as a result of the cam action, and the motor stops.
9. The microprocessor recognizes that the tap change is now complete by detecting that motor current is no longer flowing through input terminals 1 and 3. A two-second pause then occurs, allowing the sensing voltage to stabilize from the motor operation.
10. At the end of this pause, if the voltage is still out-of-band; another output is issued to close the RAISE relay, thus starting another tap change sequence (step 6). If the voltage is in-band, the LOW band indicator is turned off, and the time delay timer is reset. At all times, the microprocessor is sampling the sensing voltage for a change of conditions.

This sequence is altered slightly if the voltage averaging or time integrating mode of operation is selected. These characteristics are described in the section titled "SETTING THE CL-4C CONTROL FOR SERVICE," page 2-32.

Manual

In the manual mode of operation, the power switch can be set on either INTERNAL or EXTERNAL, and the control switch will be placed on MANUAL. If the EXTERNAL position is chosen, an external source must be applied through the terminals on the front panel.

Operation of the momentary toggle switch RAISE-LOWER applies power through the position indicator limit switch contacts, directly to the tap changer motor. As the tap changer rotates, the holding switch is closed, as described in the preceding section,

step 6. Again, this holding switch current is sensed by the circuit board, and the operations counter is appropriately incremented (Function Code 0).

Tap changes will continue to occur as long as the RAISE-LOWER switch is closed and the limit switch is not opened.

SUPERVISORY CONTROL AND DATA ACQUISITION (SCADA)

SCADA is a supervisory system used by some utilities for remote control of their system. SCADA may take on many forms: from the single retrieval of a few analog values (such as voltage, current, power factor, etc.) to remote control of the tap changer (raise, lower, inhibit), to complete remote control which allows everything to be performed remotely that could be performed at the regulator front panel. Complete remote control can only be accomplished through a digital communications link. The digital communications SCADA is discussed in the section labeled "Communications" on page 2-28.

This section applies to regulator SCADA applications that have seen increased use on distribution systems. Cooper Power Systems has prepared a connection scheme to accommodate various functions while at the same time protecting the equipment. This scheme accommodates the following functions:

1. Remotely raise and lower the tap changer
2. Remotely block automatic operation
3. Remotely apply voltage reduction

The basic requirement of the scheme is the use of the current relay package. The purpose of the current relay package is to prevent misapplication of any SCADA system, and to work with the holding switch to make sure a tap change is completed once it is started. The scheme uses a current relay to sense when the holding switch is closed. Once the holding switch is closed, the current relay contacts open and prevent any further power from being applied to the motor, except through the holding switch. When the holding switch opens, the current relay contacts close, returning control of the tap changer to one of the operational methods of control: AUTO, MANUAL, or SCADA.

Figure 2-24 shows the basic scheme and the function of the current relay. This general scheme applies to all McGraw-Edison CL regulator controls, but the wiring changes necessary to achieve the scheme differ with the different controls. The blocking contact, shown in Figure 2-23 inhibits automatic operation of the regulator when the normally-closed contact is opened.

VOLTAGE REDUCTION

The use of voltage reduction is common with SCADA schemes. Figure 2-25 shows a typical voltage reduction method. The input voltage to the control is applied between V(in) and common. The output voltage V(out) to common is applied to the sensing circuit. If relay K is energized, V(out) is greater than V(in) and when this increased voltage is applied, the sensing circuit causes the control to lower voltage by the amount of increase. Various levels of voltage reduction may be selected, depending upon the number and value of each tap on the auto-transformer. The total range is usually 0 to 10%.

NOTE: This discussion assumes that the McGraw-Edison voltage reduction accessory is **not** being used, and SCADA equipment is being connected directly to the bare CL-4C Control. Refer to Figure 2-23 for proper connections.

Use of this type of voltage reduction module will cause metering errors in the CL-4C by the amount of voltage reduction being activated.

The McGraw-Edison voltage reduction capabilities are described on page 2-30.

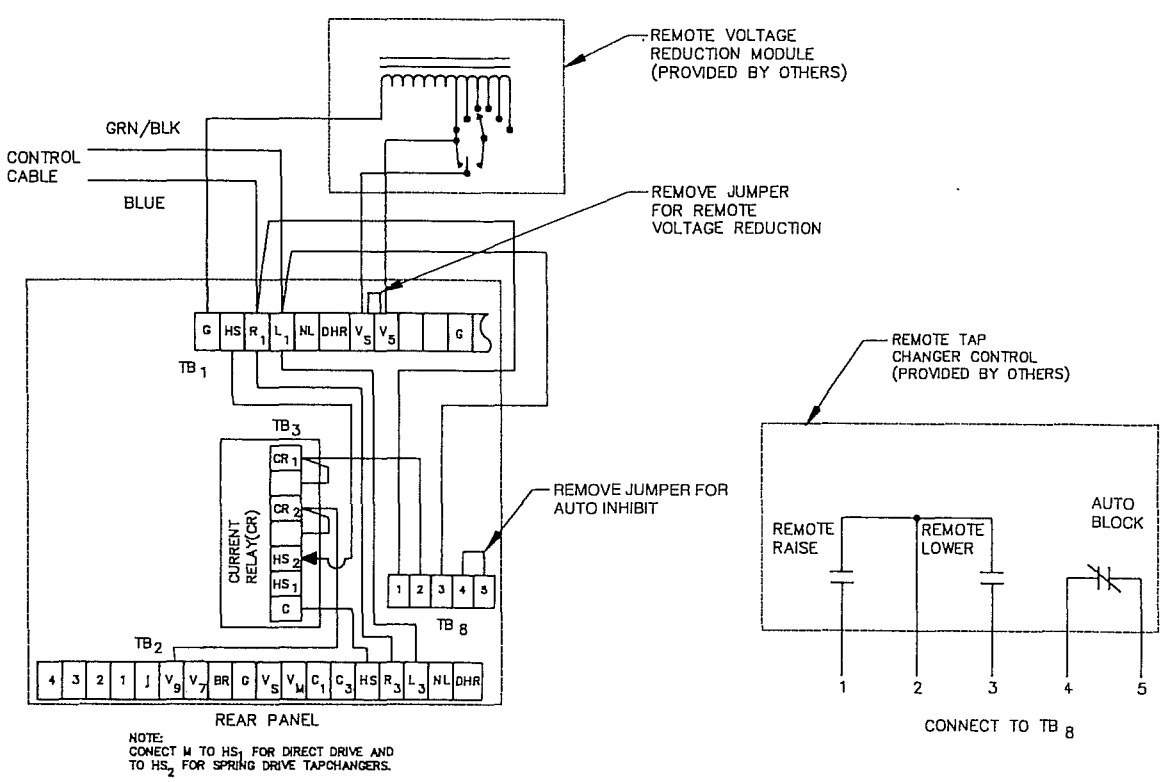

Figure 2-23
SCADA connections to CL-4C control.

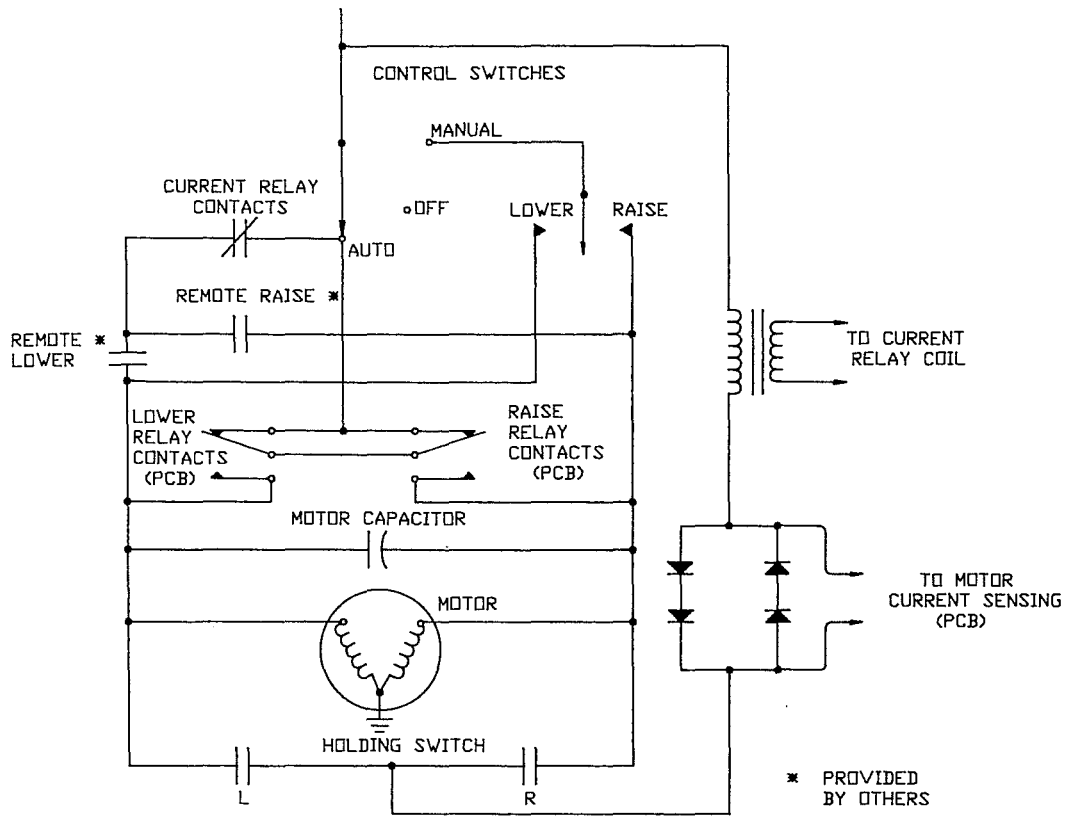

Figure 2-24
SCADA connections basic scheme.

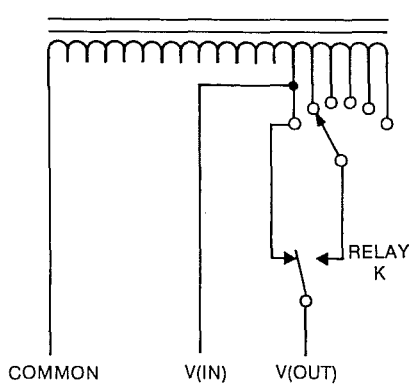

Figure 2-25
Typical User Provided Voltage Reduction Module.

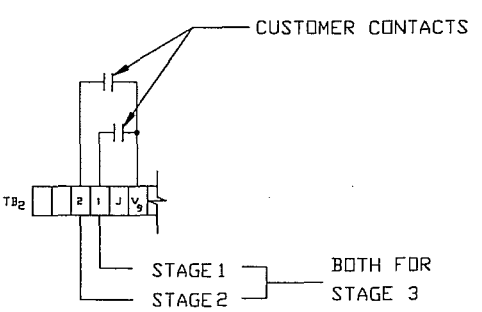

Figure 2-26
Voltage reduction customer contact points.

FIELD TRIAL CL-4 CONTROLS

Users who participated in the field trial program of the CL-4 Control have devices serialized as 10-87-___. These devices contain all the same capabilities of the production CL-4 Controls, serialized as CL00200 and higher. Field trial CL-4 Controls have Function Codes numbered as indicated in Table 2-6. The numbering of the function codes for the production controls was changed to more logically organize the data. Function Codes 12-18, 27-42, and 44-48 (some instantaneous metered values, all reverse demand metered values, the master reset and the configuration parameters) have changed. However, the normal operational parameters, forward and reverse control settings, voltage reduction, and voltage limiter parameter numbers have not changed. Function Codes which have changed are shown in parentheses ( ) in Table 2-6.

Table 2-6
Function Codes for CL-4 Control (Field Trial)

FUNCTION CODE	FUNCTION	SECURITY LEVEL CHANGE/RESET
FORWARD CONTROL SETTINGS		
0	Operation Counter	
1	Set Voltage	2
2	Bandwidth	2
3	Time Delay	2
4	Line Compensation, Resistance	2
5	Line Compensation, Reactance	2
INSTANTANEOUS METERING OPTION		
6	Load Voltage, Secondary	
7	Source Voltage, Secondary	
8	Load Center Voltage, Secondary	
9	Load Current, Primary	
10	Load Voltage, Primary kV	
11	Source Voltage, Primary kV	
(12)	Load Current, Secondary mA	
(13)	Percent Regulation %	
(14)	Power Factor	
(15)	kVA Load	
(16)	kW Load	
(17)	kVAR Load	
(18)	Line Frequency	
FORWARD DEMAND METERING OPTION		
20	Load Voltage	1
21	Load Center Voltage	1
22	Load Current	1
23H	Power Factor @ Max kVA Demand	
23L	Power Factor @ Min kVA Demand	
24	kVA Load	1
25	kW Load	1
26	kVAR Load	1
REVERSE DEMAND METERING OPTION		
(27)	Load Voltage	1
(28)	Load Center Voltage	1
(29)	Load Current	1
(30H)	Power Factor @ Max kVA Demand	
(30L)	Power Factor @ Min kVA Demand	
(31)	kVA Load	1
(32)	kW Load	1
(33)	kVAR Load	1
(34)	Max % Boost/Min % Buck	1
(35)	Max % Buck/Min % Boost	1
(36)	Master Reset	
(37)	Regulator Identification	2
(38)	Voltage Harmonics	
(39)	Current Harmonics	
CONFIGURATION		
(40)	Control Operating Mode 0=Sequential 1=Time Integrating, 2=Voltage Averaging	2
(41)	C.T. Ratio	2
(42)	P.T. Ratio	2
43	System Line Voltage	2
(44)	Regulator Configuration 0=Wye, 1=Delta Lag, 2=Delta Lead	2
(45)	Load Voltage Calibration	3
(46)	Source Voltage Calibration	3
(47)	Current Calibration mA	3
(48)	Demand Time Interval	2

FUNCTION CODE	FUNCTION	SECURITY LEVEL CHANGE/RESET
REVERSE CONTROL SETTINGS OPTION		
51	Set Voltage	2
52	Bandwidth	2
53	Time Delay	2
54	Line Compensation, Resistance	2
55	Line Compensation, Reactance	2
56	Reverse Sensing Method 0=Locked Forward, 1=Locked Reverse, 2=Reverse Idle, 3=Non-Latching, 4=Neutral Idle, 5=Co-Generation	2
57	Reverse Threshold Value %	2
COMMUNICATIONS		
60	Channel #1 Baud Rate	2
61	Channel #2 Baud Rate	2
VOLTAGE REDUCTION OPTION		
70	Voltage Reduction Mode 0=Off, 1=Local, 2=Remote 3=Automatic With Remote Override	2
71	% Voltage Reduction In Effect	
72	Local Voltage Reduction	2
73	Remote Setting #1	2
74	Remote Setting #2	2
75	Remote Setting #3	2
76	Automatic Setting #1	2
77	Automatic Setting #2	2
78	% Current For Automatic #1	2
79	% Current For Automatic #2	2
VOLTAGE LIMITER OPTION		
80	Voltage Limiting Mode 0=Off, 1=High Limit Only, 2=High and Low Limit	2
81	High Voltage Limit	2
82	Low Voltage Limit	2
WATCHDOG DIAGNOSTICS		
90	Number of Defaults	
91	Self Test	
93	Number of EEPROM Corrections	3
94	Number of Resets	3
95	Hardware Status-System Code	3
SECURITY ACCESS		
96	Level 1 Security Code	3
97	Level 2 Security Code	3
98	Level 3 Security Code	3
99	Enter Security Code	3
SYSTEM CODES		
0	All Systems Good	
3	Frequency Detection Failure	
5	A/D Converter Failure	
6	Invalid Critical Parameters	
7	Input Voltage Channel Failure	
8	Output Voltage Channel Failure	
9	Input & Output Voltage Channel Failure	
ERROR CODES		
1	Input Value Too Low	
2	Input Value Too High	
3	Improper Security to Change	
4	Invalid Security Code	
5	Invalid Option Level	

VR-32 REGULATOR TAP CHANGER • Section 3

TAP CHANGER OPERATION

Spring- and Direct-drive Tap Changers

Regulators for low-current applications employ stored-energy spring-drive tap changers. Commonly, they are used on ratings 219 amps and below. The tap changer for a specific rating is shown on the rating plate. Figures 3-1 (95 BIL) and 3-2 (150 BIL) illustrate typical spring-drive mechanisms. On regulators manufactured January 1976 and later, the model number is stamped on the drive frame. Common models are either 859 or 928 (Figure 3-1) and 170 (Figure 3-2), followed by a suffix letter.

Voltage regulators used in medium-and high-current applications employ direct-motor-driven tap changers. They have the motor and gear train moving the contacts through a geneva gear, pinion and scroll cam. Direct-drive tap changers are commonly applied above 219 amps. Both the mid-current, Model 770B (Figure 3-3) and high-current, Model 660C (Figure 3-4) are rated 150 BIL. See Table 3-1 for application chart of tap changer models.

MOTOR

The motor for the spring-drive tap changer is a capacitor-run, reversing gear-motor suitable for operation at 120 volts ac, single-phase, at 50/60-Hz. An integral braking mechanism controls motor coast.

The motor for the direct-drive tap changers is a capacitor-start, capacitor-run, high-torque, reversing, gear-motor rated 120 volts ac, single-phase, at 50/60-Hz, with an internal magnetically disengaging brake mechanism.

All components are compatible with hot transformer oil and the windings are oil cooled. The motors will carry locked-rotor current for at least 3000 hours.

REVERSING SWITCH

The reversing switch function changes the polarity of the tapped winding. When the spring-drive tap changer is in the neutral position, the reversing switch is open. When the direct-drive tap changer is in the neutral position, the reversing movable contact is in contact with the lower reversing stationary contact (VL).

The load current on all types is carried by the source bushing, the reactor, slip rings, main movable contacts, neutral stationary contact and the load bushing.

The reversing switch motion on the spring-drive tap changer occurs as the main movable contacts enter or leave the neutral position. A pin in the contact drive sprocket assembly engages a slot in the reversing segment when the main switch is in the neutral position. The first tap step in either direction rotates the segment and the reversing switch engages the appropriate reversing stationary.

The drive sprocket pin and reversing segment provide a mechanical stop located approximately 320 degrees on either side of neutral. When the pin engages the end of the segment, the spring-drive mechanism will be loaded and the segment is locked to prevent any further motion in that direction.

The reversing switch motion on the direct-drive tap changers occurs as the main movable contact moves from neutral to the first raise position. On the Model 770B tap changer, a roller on the back side of the rear roller plate engages a slot in the reversing segment on the reversing insulating arm. On Model 660C tap changer, a pinion, mounted on the same shaft as the rear roller plate, engages a slot in the reversing segment on the reversing insulating arm. As the rear roller plate rotates, the reversing movable contacts are driven from the VL reversing stationary contact to the VR contact.

Table 3-1
Tap Changer Model Application Chart.

Rated Volts (kV)	Load Current (Amp)	Rated kVA	Catalog Number	Tap Changer
2.5 60 kV BIL	100 200	25 50	RSAA025025AA RSAA025050AA	928D 928D
	300 400	75 100	RSAA025075AA RSAA025100AA	770B 770B
	500 668	125 167	RSAA025125AA RSAA025167AA	660C 660C
	1000 1332	250 S 333 S	RSAA025250AA RSAA025333AA	770B 770B
	1665	416.3 S	RSAA025416AA	770B
5.0 75 kV BIL	50 100	25 50	RSAA050025AA RSAA050050AA	928D 928D
	200 250	100 125	RSAA050100AA RSAA050125AA	928D 770B
	334 500	167 250 S	RSAA050167AA RSAA050250AA	770B 660C
	668 833	333 S 416.3 S	RSAA050333AA RSAA050416AA	660C 660C
7.62 95 kV BIL	50 75	38.1 57.2	RSAA076038AA RSAA076057AA	928D 928D
	100 150	76.2 114.3	RSAA076076AA RSAA076114AA	928D 928D
	219 328	167 250 S	RSAA076167AA RSAA076250AA	928D 770B
	438 548	333 S 416.3 S	RSAA076333AA RSAA076416AA	660C 660C
	656 875	500 S 667 S	RSAA076500AA RSAA076667AA	660C 660C
	1093	833 S	RSAA076833AA	660C
13.8 95 kV BIL	50 100	69 138	RSAA138069AA RSAA138138AA	170C 170C
	150 200	207 276 S	RSAA138207AA RSAA138276AA	170C 170C
	300 362	414 S 500 S	RSAA138414AA RSAA138500AA	770B 660C
	400 483	552 S 667 S	RSAA138552AA RSAA138667AA	660C 660C
	604	833 S	RSAA138833AA	660C
14.4 150 kV BIL	50 100	72 144	RSAA144072AA RSAA144144AA	170C 170C
	200 231	288 S 333 S	RSAA144288AA RSAA144333AA	170C 770B
	289 300	416 S 432 S	RSAA144416AA RSAA144432AA	770B 770B
	347 400	500 S 576 S	RSAA144500AA RSAA144576AA	660C 660C
	463 500	667 S 720 S	RSAA144667AA RSAA144720AA	660C 660C
	578	833 S	RSAA144833AA	660C
19.92 150 kV BIL	25.1 50.2	50 100	RSAA199050AA RSAA199100AA	170C 170C
	100.4 167	200 S 333 S	RSAA199200AA RSAA199333AA	170C 770B
	200.8 250	400 S 500 S	RSAA199400AA RSAA199500AA	770B 770B
	335 418	667 S 833 S	RSAA199667AA RSAA199833AA	660C 660C

Note: An "S" following the kVA denotes station mount.
Spring-drive: 928D and 170C
Direct-drive: 770B and 660C

DRIVER MECHANISM - Spring-drive

Two steel extension springs are arranged in a triangular configuration to provide positive "spring-over-center" action to move the switch contacts. The mechanism is adjusted for smooth make-and-break contact action.

DRIVE MECHANISM - Direct-drive

The 770B and 660C tap changers employ drive mechanisms based upon the same design principle, and many components are interchangeable. The motor turns a geneva pinion three complete revolutions per tap change. The motion of the geneva pinion turns a six-tooth geneva gear, a main drive shaft, and a scroll cam 180 degrees per tap change. Each 180-degree movement of the scroll cam operates one of two roller plates and moves the corresponding main movable contacts 40 degrees. The combination of geneva gearing and scroll cam characteristics results in a three-step, wipe/transfer/wipe contact action.

Attached to the main (geneva gear) drive shaft is a planetary gear-type mechanical stop which prevents contact motion beyond the maximum raise and lower position.

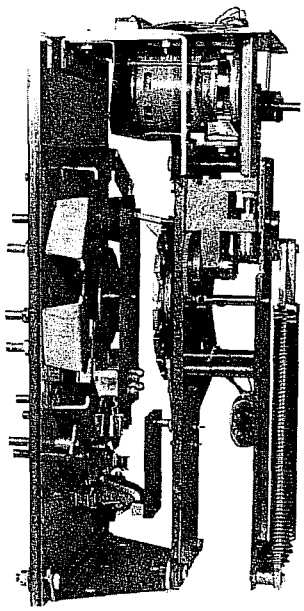

Figure 3-1.
928D spring-drive tap changer.

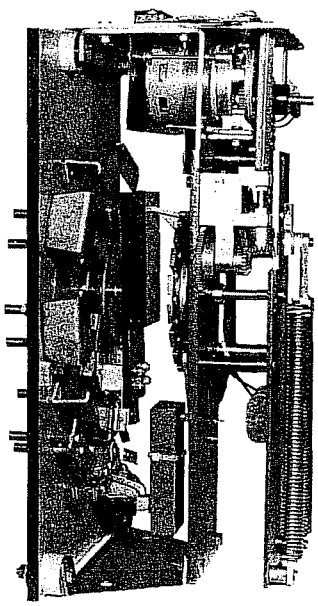

Figure 3-2
170C spring-drive tap changer.

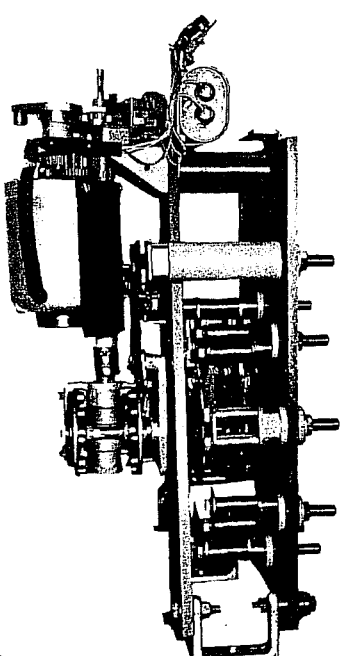

Figure 3-3
770B direct-drive tap changer.

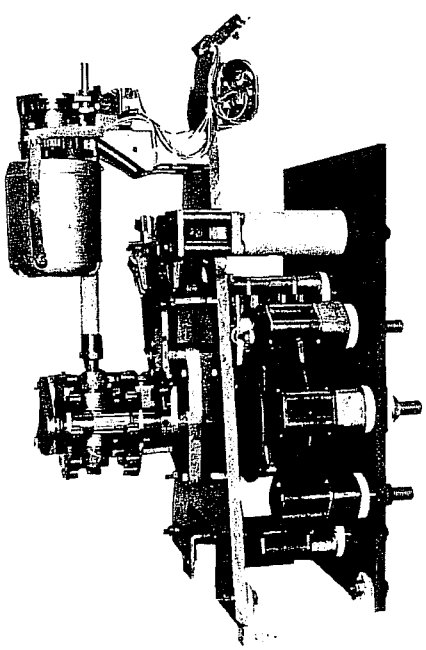

Figure 3-4.
660C direct-drive tap changer.

CONTACTS

Several connection conditions are satisfied by the variety of contact structures. They are divided into arcing and non-arcing.

The non-arcing contacts consist of front and rear slip rings which serve as the connection point for opposite ends of the reactor windings and one end of the two main movable contacts. All contact surfaces are Electrical Tough Pitch (ETP) copper and all joints are riveted, bolted, or brazed to maintain a high-conductivity current path. Contact pressure between moving points is maintained by steel leaf springs (in the spring-drive tap changers) or by opposing steel compression springs (in the direct-drive tap changers). The main movable contact is split to make contact on both surfaces of the slip ring and to resist separation in the event of high-current surges.

There are several types of arcing contacts on a regulator tap changer. They can be divided into two categories, stationary and movable.

1. The main stationary contacts are connected to the series-winding taps. The main movable contacts connect the slip rings to the main stationary contacts.
2. The reversing stationary contacts are connected to opposite ends of the series winding. The reversing movable contacts connect the neutral stationary contacts and load bushing to the reversing stationary contact.
   NOTE: The neutral stationary contact in the direct-drive tap changer has both arcing and non-arcing contact conditions.

All stationary contact bodies are made of ETP copper. Copper-tungsten inserts are brazed to the edges of the stationary contacts since those contacts are subject to damage from impact or arcing duty. The main movable contacts are constructed of a copper-tungsten. The contacts are split to make contact on both sides of the stationary contacts. This split resists separation in the event of high-current surges.

The direct-drive tap changer stationary contact body is copper. Copper tube spacers and steel bolts are employed to fasten all parts and provide a high conductivity current path.

The reversing movable contacts are the same construction as the main movable contact.

The 660C direct-drive tap changer employs a double set of reversing movable contacts and silver-tungsten arcing ends to satisfy the high-current rating.

Contact erosion is a function of many variables such as tap voltage, load current, power factor, reactor design and tapped winding design.

Stationary contacts should be replaced before the arcing inserts erode to the point where there may be burning on the copper. Movable contacts should be replaced when approximately 1/8 in. of smooth rubbing surface remains. Refer to *S225-10-2* for complete information and typical erosion patterns for the various stages of contact life.

OPERATING SEQUENCE - Spring-drive

When the spring-drive switch is in the neutral position and the control calls for a tap change, the following events occur:

1. Motor brake releases and motor starts.
2. Motor holding switch closes, assuring that one tap change will be completed.
3. The up slope of sprocket cam engages a lip of the spool. This lifts the pin in the pin cam and frees it from the hole in the actuator.
4. A projection on the sprocket cam contacts a leg on the pin cam, and both turn.
5. Drive shaft, which is attached to the pin cam, begins to turn the crank arm and the springs begin to extend.
6. Pin comes free from the lip on the spool and a spring pushes it against the surface actuator.
7. Down slope of sprocket cam returns the spool to the start position.
8. Pin drops into the hole in the actuator 180 degrees from the start position.
9. At this point, the crank arm is at top dead center and the springs are fully loaded. Drive shaft and crank arm, sprocket cam, pin cam, and actuator are locked together and connected through the chain to the motor.
10. Motor drives all parts beyond top dead center.
11. Spring unloads, instantaneously pulling pin cam and actuator through 180 degrees at high speed. Pins on the actuator cause the contact drive sprocket to index one tap position.
12. As the contact drive sprocket moves, it imparts motion to the reversing switch segment and main movable contacts. This action closes the reversing movable and reversing stationary contacts and drives the main movable contact onto the adjacent main stationary contact. Also, the neutral light switch opens.
13. Motor continues to turn the sprocket cam until the motor holding switch opens. The gear motor output shaft has completed one revolution.

Should more than one tap change be required, the foregoing sequence will be repeated (except reversing switch portion) until the control is satisfied or the limit switch in the position indicator is reached.

OPERATING SEQUENCE - Direct-drive

When the switch is in neutral and the control calls for a tap change in the raise direction, the following events occur:

1. Motor brake releases and motor starts.
2. Geneva pinion rotates counter-clockwise to engage the geneva gear.
3. Geneva pinion drives the geneva gear, main drive shaft, and scroll cam through 60 degrees and produces initial wipe action at the front main movable contact and reversing movable contacts.
4. Motor holding switch closes, assuring that one tap change will be completed.
5. Geneva pinion completes first revolution and continues to rotate.
6. Geneva pinion drives the geneva gear through 60 degrees and the scroll cam and roller plates transfer the front main movable contacts from the neutral stationary contact N to the stationary contact No. 1. Simultaneously, the reversing movable contact is transferred from the reversing stationary contact (VL) to the stationary contact (VR).
7. Neutral light switch opens.
8. Geneva pinion completes second revolution and continues to rotate.
9. Geneva pinion drives the geneva gear, main drive shaft, and scroll cam through 60 degrees and produces final wipe action at the front main movable and reversing movable contacts.
10. Motor holding switch opens.
11. Motor brake engages.
12. Motor stops.

A tap change from No. 1 raise position to neutral will be accomplished as described, except the geneva pinion will rotate clockwise. The reversing movable contact will be transferred from the reversing stationary contact (VR) to the stationary contact (VL).

TROUBLE SHOOTING GUIDE • Section 4

COMPLETE REGULATOR IN SERVICE

⚠ WARNING:
When trouble shooting energized equipment, caution should be taken to wear protective gear and to avoid personal contact with energized parts. Failure to do so may cause serious injury or death.

External Check

When service personnel arrive at what appears to be a malfunctioning regulator, it is advisable to examine the power connections first. For example, verify that the source lead is connected to the source bushing; that the load lead is connected to the load bushing; and that the source-load lead is connected to the source-load bushing. Check other potential problems, such as an open ground connection.

Defining The Problem

Page 1-19, Figure 2-19 (page 2-37),can be used while diagnosing the problem.

After the external power connections have been checked, check the voltage-disconnect knife switch (V_1 and V_6 if present) and the current shorting knife switch (C) of the rear panel signal circuit in the control box. Close the voltage disconnects if open. Open shorting switch, if closed.

Check for loose connections or burnt wiring.

Make sure ratio-correcting transformer RCT1 is on the correct tap for the regulated voltage shown on the nameplate on the control box door.

Remove the motor and panel fuses from the control and check for continuity across each fuse. Spares, if needed are included with the control.

NOTICE:
Use only 350 volts ac, slow-blow ceramic fuses of the proper current rating. Failure to do so may cause unnecessary fuse operation or insufficient protection of the regulator and control.

If the above checks do not identify the problem, determine which of the following three categories best describes the malfunction, and follow the corresponding diagnostic steps:

THE REGULATOR WILL NOT OPERATE MANUALLY OR AUTOMATICALLY

Diagnosing trouble:

A. Set the CONTROL switch on RAISE.
B. Measure the voltage between terminals R_1 and G on terminal board TB1. The voltage reading should be approximately the set voltage setting.
C. Set the CONTROL switch on LOWER.
D. Measure the voltage between terminals L_1 and G on terminal board TB1. The voltage reading should be approximately the set voltage setting.
E. If correct voltage readings are obtained in steps B and D above, the trouble may be in the position indicator, junction box, or control cable. Refer to the junction box troubleshooting section on page 4-2.
G. If there is no voltage measurement in either step B or D, make a corresponding measurement (R_3 to G and L_3 to G) on lower terminal board TB2.
H. If the voltages measured in Step G are approximately the set voltage setting then the fault is likely a loose connection or a faulty terminal swage between TB1 and TB2.
I. If steps B, D, and G do not provide voltage readings, measure the voltage between VM and G on terminal board TB2. The reading should be approximately the set voltage setting.
J. If Step I measures correctly, the trouble could be an open motor fuse, power switch, or control switch of the control.
K. If Step I does not yield a voltage measurement check the voltage between $PD_1$1 (V1) and ground (G) at the voltage disconnect knife switch.
   1. If approximately the set voltage setting is obtained, the V1 disconnect or the ratio correcting transformer (RCT1) of the rear panel signal circuit is probably faulty.
   2. If voltage is not obtained, the trouble is in the control cable, junction box, or regulator tank. Refer to the junction box troubleshooting section on page 4-2. If the junction box checks are satisfactory, the trouble is in the regulator tank. See *S225-10-2* for the trouble shooting method.

THE REGULATOR WILL OPERATE MANUALLY BUT NOT AUTOMATICALLY

Diagnosing trouble:

A. Measure voltage from VS to G on lower terminal board TB2.
   1. A measurement of approximately the set voltage setting at VS to G indicates that the problem is in the control.
   2. If there is no voltage present at VS to G, the trouble is in the V1 disconnect or ratio-correcting transformer of the rear signal circuit.
B. If check A indicates that the trouble is in the control, refer to *Control Trouble Shooting,* below.

THE REGULATOR OPERATES MANUALLY BUT OPERATES INCORRECTLY WHEN SET ON AUTOMATIC

Diagnosing trouble:

Run the regulator to the neutral position with the control switch. Check for voltage between V_4 and G on TB1. This is the sensing circuit supply voltage from the output of RCT1 on the rear panel. If this voltage is more than 10% above or below the programmed voltage level setting of the control, then the source is beyond the range of the regulator. An absence of voltage would indicate a wiring problem such as an opening somewhere in the control power supply. If these checks are correct, then the malfunction is probably in the control. Refer to *Control Trouble Shooting,* below.

Control Trouble Shooting

At this point, the problem has been determined to be in the control, so the front panel should be taken out of the control cabinet and taken to a service bench for trouble shooting. Figure 2-19 can be used to aid the trouble shooting process. The panel components are checked by using an external voltage of approximately 120 volts ac, 60/50 Hz, applied to the external source terminals of the control.

To gain access to the front panel components, first remove the back shield. This is accomplished by removing the cable clamp attached to the shield side, and then removing the four nuts which secure the shield to the front panel.

1. Check the motor and panel fuses to ensure they have not blown.
2. Connect the power source to the external source terminals, observing the proper polarity. Place the power switch on the EXTERNAL position.
3. The CL-4C Regulator Control display should light. If the display does not light, measure the voltage on the printed circuit board terminals 12 to 13, expecting to measure approximately 120 volts ac. **The circuit board terminals are identified as 1 through 15, from left to right.**

4. If the display does not light and no voltage is measured at terminals 12 to 13, then the problem is probably in the power switch. The power switch can be checked by measuring the voltage from terminal 2 to ground, terminal 5 to ground, and terminal 8 to ground. These measurements should equal the external voltage applied. If not, the power switch is defective.
5. If the display does not light and voltage is measured at terminals 12 to 13, then the circuit board is defective and must be returned to the factory for repair.
6. If the display does light, but reports the "FAIL" message, then the internal diagnostics have detected a problem. The details of this internal process are described in the control section, labled SYSTEM PROTECTION/DIAGNOSTICS, page 2-31.

The front panel circuits for the DRAG-HAND RESET solenoid (DHR) and NEUTRAL LIGHT (NL) can be checked as follows:

1. Connect the ac voltmeter from G to DHR on fanning strip TB2 (identified as white wire [G] and white/orange tracer [DHR]).
2. Depress the DRAG-HAND RESET toggle switch and observe approximately 120 volts on the voltmeter. If no voltage is measured, the switch is probably defective.
3. Connect the ac voltmeter from G to NL on fanning strip TB2 (identified as white wire [G] and white/red tracer [NL]).
4. Activate the NEUTRAL LAMP TEST toggle switch and observe approximately 120 volts on the voltmeter and note that the neutral light should come on. If no voltage is measured and the light does not come on, the switch is probably defective. If voltage is measured but the light does not come on, the lamp or lamp holder is defective.

Junction Box Trouble Shooting

This section is used if the regulator will not operate manually. (Problem was isolated to junction box or regulator tank after checking-out control, on page 4-1).

The junction box is composed of a terminal board, the position indicator, and the control box interconnections. Refer to Figure 4-1, when the following steps are made:

1. Remove the regulator from service, as stated on page 1-8.
2. Ground the three high-voltage bushings.
3. Open V_1 disconnect switch on rear panel of control cabinet.
4. Remove junction box lid.
5. Check the wiring on the junction box terminal board for loose connections, burnt wiring, or bad swage joints.
6. A. Set the POWER switch to EXTERNAL.
   B. Apply a 60/50 Hz, 120-volt ac nominal variable source to the EXTERNAL SOURCE terminals.
   C. Set the CONTROL switch on RAISE.
   D. Measure the voltage between terminals R and G on terminal board. The voltage reading should be approximately 120 volts ac.
   E. Set the CONTROL switch on LOWER.
   F. Measure the voltage between terminals L and G on terminal board. The voltage reading should be approximately 120 volts ac.
   G. If correct voltage readings are obtained in steps B and D above, the trouble is in the regulator tank. Refer to trouble-shooting section of *S225-10-2.*
   H. If there is no voltage measurement in either step B or D, the problem is in the limit switches inside the position indicator or the control cable.
7. Check the continuity of the raise and lower limit switches. The switches should be closed on all tap changer positions except for the set limit switch positions of the indicator dial. To check the continuity:
   A. Remove position indicator green-black lead from splice terminals.
   B. Place the meter lead on the disconnected lead and the other lead on terminal L of the junction box terminal board. Then check continuity.
   C. If a continuity problem occurs, refer to *Position Indicator Replacement,* on page 4-3.
   D. Remove the position indicator blue lead from the splice terminal.
   E. Place the meter lead on the disconnected lead, and the other lead on terminal R of the junction box terminal board. Check continuity.
   F. If a continuity problem occurs, refer to *Position Indicator Replacement,* on page 4-3.
8. Check the reset solenoid of position indicator. Push the DRAG HAND RESET switch while measuring the voltage between DHR and G on the terminal board. The voltage reading should be approximately 120 volts ac and DRAG HANDS will reset.
   A. If 120 volts is read and drag hand will not reset, refer to *Position Indicator Replacement* on page 4-3.
   B. If 120 volts is not read; refer to *Control Trouble Shooting,* on page 4-1.

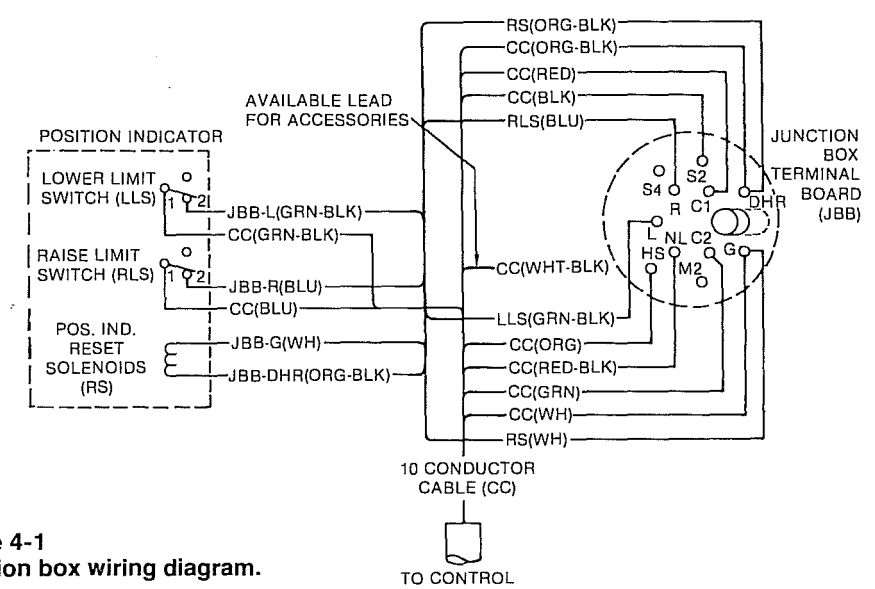

Figure 4-1
Junction box wiring diagram.

Position Indicator Replacement

The following instructions apply only to the junction box mounted position indicator construction that was initiated in April, 1980.

To replace a defective position indicator requires removing the unit from service as outlined in **REMOVAL FROM SERVICE** on page 1-8.

1. A defect in the position indicator may have caused loss of synchronization between the tap changer and the indicator hand. Verify that the tap changer is in neutral via the neutral light of the control and visual inspection of the tap changer. If the position indicator does not also show neutral, refer to instructions in *S225-10-2, Spring-and-Direct Drive Tap Changers.*
2. Remove the junction box cover.
3. Note the location of the indicating hand for future alignment and disengage the flexible shaft from the position indicator shaft.
   A. In early 1986 this joint was changed to a set screw type coupling.
   B. Older equipment employed a cotter pin coupling.
4. Disconnect the four leads from the junction box terminal board and open the two splice terminals to the control cable.
5. Remove the three bolts holding the indicator to the junction box and slide the indicator free.
6. Remove the gasket from the groove on the back of the indicator body.
7. Clean the gasket surface of the junction box and the gasket and groove on the new indicator.
8. Place the gasket in the groove and insert the leads through the junction box wall, align the holes and install the three bolts finger tight.
9. Wrench-tighten the bolts to evenly compress the gasket and bring the indicator body tight against the junction box.
10. Connect the six leads to the terminal board and control cable leads per Figure 4-1 and secure all connections.
11. Turn the indicator drive shaft to place the hand at the previously noted position.
12. Slide the flexible shaft coupling over the indicator shaft and secure the joint.
13. Position the wire to prevent snagging on the coupling or cotter pin. Secure with the wraps.
14. Connect a 120-volt ac external power supply to the control.
15. Run the tap changer manually to verify alignment of the position indicator hand and the neutral light. If correction is required:
    A. Stop the tap changer with the neutral light on.
    B. Disconnect the flexible shaft from the back of the indicator.
    C. Turn the indicator shaft to center the hand at zero (neutral).
    D. Reconnect the flexible shaft.
16. Run the tap changer to both raise and lower extremes to check operation of the limit switches and coordination with holding switch.
17. Run between position nine raise and nine lower to check neutral light and position indicator alignment. Run several cycles.
18. Should the alignment of the position indicator hand and the neutral light become unstable during this check, an internal inspection of the tap changer and position indicator shaft is required. See S225-10-2 for instructions.
19. Return the tap changer to the neutral position and disconnect the power supply.
20. Replace the junction box cover.
21. The unit may now be placed into service as outlined on page 1-5.

⚠ CAUTION

It must be verified that BOTH the neutral light AND the position indicator hand indicate NEUTRAL when the tap changer is physically in the neutral position. Lack of the synchronization will cause an indefinite indication of NEUTRAL. Without both indications of neutral, bypassing of the regulator at a later time will not be possible, and the line must be de-energized to avoid shorting part of the series winding.

CONTROL CALIBRATION

All controls are factory calibrated and should not need to be recalibrated by the user. However, calibration can be performed for both the voltage and current circuits by performing the following steps:

Voltage Calibration

1. Connect an accurate true-RMS-responding voltmeter to the voltmeter terminals. This voltmeter should have a base accuracy of at least 0.1% with calibration traceable to the National Bureau of Standards.
2. Connect a stable 60/50 Hz voltage source (with less than 5% harmonic content) to the external source terminals.
3. Place the power switch on EXTERNAL.
4. Adjust the voltage source to provide 120.0 volts to the control, as read on the reference voltmeter.
5. Before calibration can be performed, security level 3 must be activated. This is accomplished by entering the proper security code at Function Code 99. Depress the following keys on the keypad:
   FUNCTION, 99, ENTER
   32123, ENTER
   The proper level of security is now activated.
6. Access Function Code 47 by keying FUNCTION, 47, ENTER.
7. The display will show the voltage applied to the control. This should correspond to the reading on the reference voltmeter. If the CL-4C Control reading is **significantly** different (greater than .3V error), the calibration can be altered by keying CHANGE, and then entering the correct voltage as displayed on the reference meter, followed by ENTER. The voltage circuit is now calibrated.

Current Calibration

1. Connect an accurate true-RMS-responding ammeter (such as the meters above) in series with the current source.
2. Connect a stable 60/50 Hz current source (with less than 5% harmonic content) to the reference ammeter and to the current input terminals C1 and C3 on fanning strip TB2 (C1 is identified by a red wire, and C3 is identified as the green wire).
3. To power the control, connect a 120-vac voltage source to the EXTERNAL SOURCE terminals.
4. Place the power switch on EXTERNAL.
5. Adjust the current source to provide .200 amps to the control, as read on the reference ammeter.
6. Before calibration can be performed, security level 3 must be activated. This is accomplished by entering the proper security code at Function Code 99. Depress the following keys on the keypad:
   FUNCTION, 99, ENTER
   32123, ENTER
   The proper level is now activated.
7. Access Function Code 48 by keying FUNCTION, 48, ENTER.
8. The display will show the current applied to the control. This should correspond to the reading on the reference ammeter. If the CL-4C Control reading is **significantly** different (greater than .6 milliamps error), the calibration can be altered by keying CHANGE, and then entering the correct current as displayed on the reference meter, followed by ENTER. The current circuit is now calibrated.

NOTES:

ACCESSORIES - Section 5

HEATER ASSEMBLY

The thermostatically-controlled heater assembly (Figure 5-1) is best used in high-humidity areas.

The heater assembly contains an ON-OFF toggle switch. In the ON position, the thermostat in the heater assembly will turn the heater on when the temperature falls below 85°F and off when the temperature exceeds 100°F. For full details refer to *S225-10-1 Supplement 2.*

Figure 5-1
Heater.

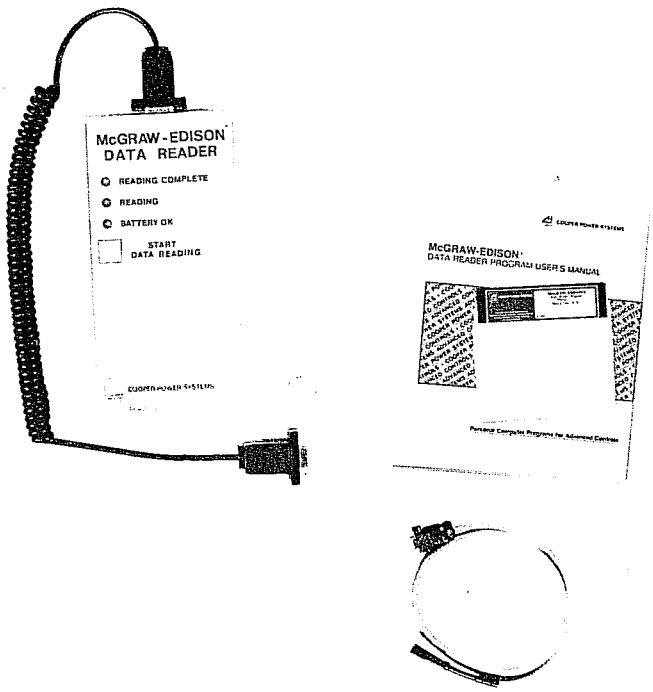

Figure 5-2
Data Reader and Software Kit.

DATA READER

The optional hand-held DATA READER allows the operator to copy all of the Function Code parameters from the CL-4C Control for transfer to a personal computer. Operation of the control is not affected by the DATA READER.

The DATA READER can store data from 100 different CL-4C Controls before the memory must be purged.

The list of parameters copied to the DATA READER is shown in Table 2-2, page 2-5, and includes all five values for both voltage and current harmonics, and the H, L, and P values for all demand parameters.

Data Reader and Software Kit

The Data Reader and Software Kit includes the Data Reader, the Data Reader to control cable, the Data Reader to PC cable, and the Data Reader software. The non copy-protected software operates on an IBM-type personal computer with DOS 2.0 or higher operating system. The software allows the operator to perform the following functions:

1. Upload the data from the Data Reader to the software data base.
2. Erase the Data Reader memory.
3. Scan the data on the CRT.
4. Print reports.
5. Transfer data to another data base.

Data Reader Assembly

The Data Reader Assembly consists of the Data Reader and the Data Reader to control cable.

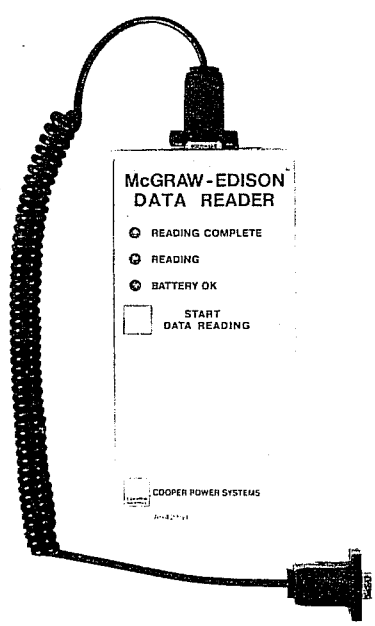

Figure 5-3
Data Reader Assembly.

DIGITAL COMMUNICATIONS

This feature includes full remote metering and realtime operation capability. Using this feature, all metering and changing of parameters, including all of the options, can be controlled remotely. Additional remote capabilities include the ability to tap up or down a specified number of taps and the ability to determine the status of local activity. Digital communications requires the addition of two communications boards.

SCADA RELAY AND TERMINAL BLOCK

For SCADA operation (remote tap changer control), per Figure 2-23, page 2-43, a SCADA relay and terminal block assembly (Figure 5-4) is required.

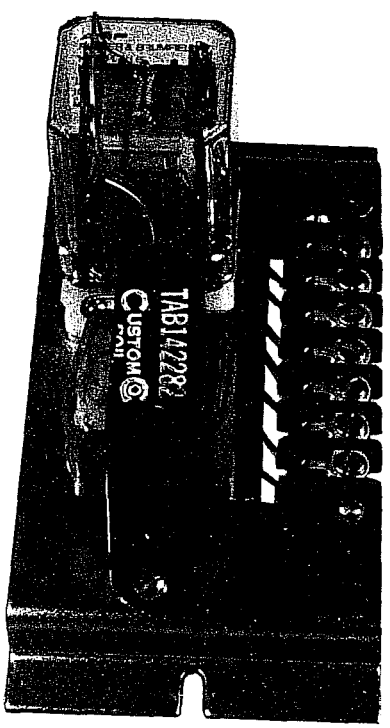

Figure 5-4
SCADA relay and terminal block.

REMOTE MOUNTING CONTROL CABLE

For remote mounting of the control cabinet, various length cables are available. See the *Spare Parts* section.

FAN COOLING ACCESSORY

Voltage regulators 250 kVA and larger can be equipped with fan cooling (Figure 5-5). Fan cooling increases the load capacity of the regulator by 25%. Special requirements are necessary on regulators using fan cooling, therefore the regulator must be ordered with fan cooling or with provisions for adding fan cooling. Mounting cooling fans flush to the plate-type radiator is accomplished by using T-bolts that secure the cooling fan to the bank of radiators.

The automatic operation of the fan is controlled by a thermometor having a thermal switch that will cycle the fan on or off when the top-oil temperature reaches predetermined temperature limits. The thermal switch has an upper limit adjustable from 80°C to 110°C. The differential from make to break is 6°C to 10°C. The thermal switch, when temperature activated or deactivated, signals a relay which turns the fan on or off. For full details, refer to *S225-10-1 Supplement 8.*

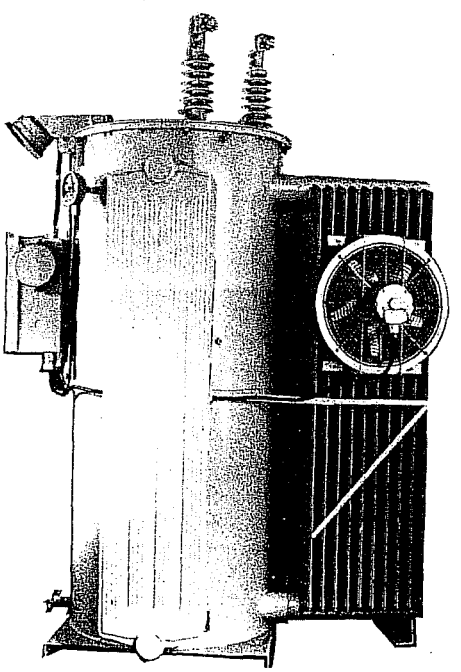

Figure 5-5
Fan cooling accessory.

SPARE PARTS - Section 6

When ordering replacement parts or field-installable accessories for your McGraw Edison VR-32 step-voltage regulator, provide the following information:

1. Regulator serial number (found on control nameplate).
2. Quantity of each part required.
3. Part code number of each part (as shown in Table 6-1).
4. Description of each part (as shown in Table 6-1).

Additional parts and installation information for tap changers is found in bulletin *S225-10-2.*

Table 6-1
Spare Parts

Description	Part Code No.	Reference Figure
• Bypass series arrester (with mounting hardware)	+	Figure 1-2
• Complete bushing assembly (indicate if for S, L, or SL application)		
Dry-type (95 kV BIL and below)	+	Figure 6-1
Oil-filled (150 kV BIL and above) (Note: oil-filled bushings available only as complete assembly.)	+	(not shown)
• Dry-type bushing components		
Terminal cap	+	Figure 6-1
Terminal cap gasket	+	Figure 6-1
Porcelain	+	Figure 6-1
Bushing/tank gasket	+	Figure 6-1
Clamp w/bolts	+	Figure 6-1
Clamp spring	+	Figure 6-1
• Position indicator (complete)	4000	Figure 1-8
• Position indicator glass cover	4001	Figure 1-8
• Position indicator external drive cable (not used on regulators without junction box)	4004	(not shown)
• Position indicator internal drive cable (provide total length of old cable in inches)	+	(not shown)
• 928D and 170C Spring-drive tap changer parts		
Replacement motor kit A * (with sprocket and pin)	3014	Figure 6-2
Main movable contact right hand**	3007	Figure 6-2
Main movable contact left hand**	3006	Figure 6-2
Main stationary contact	3002	Figure 6-2
Reversing stationary contact right hand**	3004	Figure 6-2
Reversing stationary contact left hand**	3003	Figure 6-2
Reversing movable contact — 928D	3022	Figure 6-2
Reversing movable contact — 170C	3005	Figure 6-2
• 770B Direct-drive tap changer parts		
Replacement motor kit A* (use old shield)	3031	Figure 6-4
Replacement motor shield	3068	Figure 6-3
Main or reversing movable contact	3059	Figure 6-3
Main stationary contact	3053	Figure 6-3
Reversing stationary contact	3067	Figure 6-3
Reversing stationary neutral contact (non-arcing)	3057	Figure 6-3

Description	Part Code No.	Reference Figure
• 660C Direct-drive tap changer parts		
Replacement motor kit A*	3041	Figure 6-4
Main movable contact	3029	Figure 6-4
Main stationary contact	3023	Figure 6-4
Reversing stationary contact	3037	Figure 6-4
Reversing stationary neutral contact (non-arcing)	3027	Figure 6-4
Reversing movable contact	3036	Figure 6-4
• CL control parts		
Complete CL-4C control (includes 6500, back panel, cabinet, no cable)	6505	(not shown)
CL-4C front panel only (includes all operational electronics of control)	6500	Figure 2-1
Neutral light bulb	6051	Figure 2-1
Motor fuse (6A) (pack of 5)	6047	Figure 2-1
Panel fuse (2A) (pack of 5)	6048	Figure 2-1
SCADA relay and terminal strip	6071	Figure 5-4
• Control cable***		
15' for remote mounting	6104	(not shown)
20' for remote mounting	6105	(not shown)
25' for remote mounting	6106	(not shown)
30' for remote mounting	6107	(not shown)
• Field-installable accessories See page 5-1 for further information.		
Control cabinet heater	9000	Figure 5-1
Fan cooling	9005	Figure 5-5
Auxiliary control cabinet and hardware	9050	(not shown)
Long control cabinet and hardware	9054	(not shown)
• Accessories for data extraction.		
Data Reader & Software Kit	9076	Figure 5-2
Data Reader Assembly	9077	Figure 5-3

*Motor Kits include motor, capacitor and hardware.
**When contact viewed from motor-side of tap changer.
***Current design has 10 conductors. 12 conductor cables with required terminations are available for obsolete designs or to mount CL-4C on previous designs. Contact factory service department for details.
+ See parts manual or contact factory service department.
• Other lengths available. Contact factory service department.

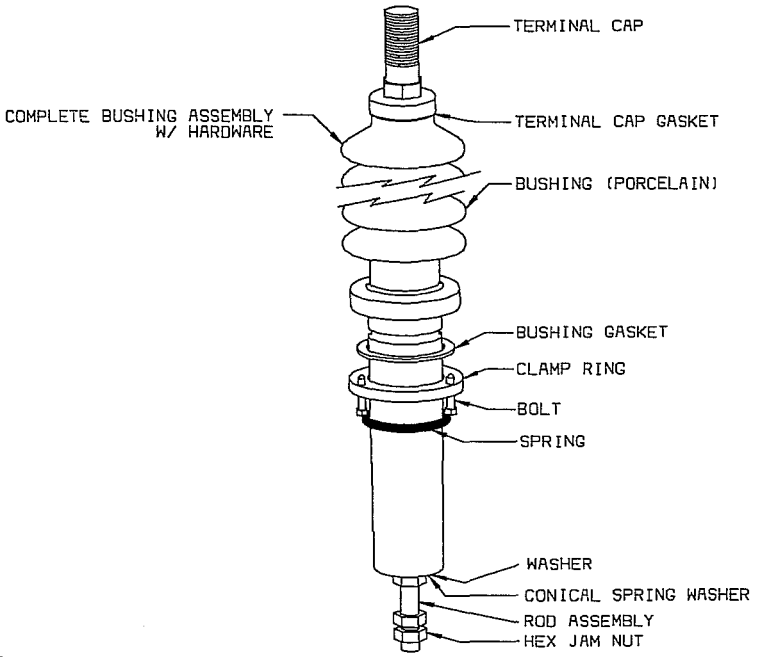

Figure 6-1
High-voltage bushing.

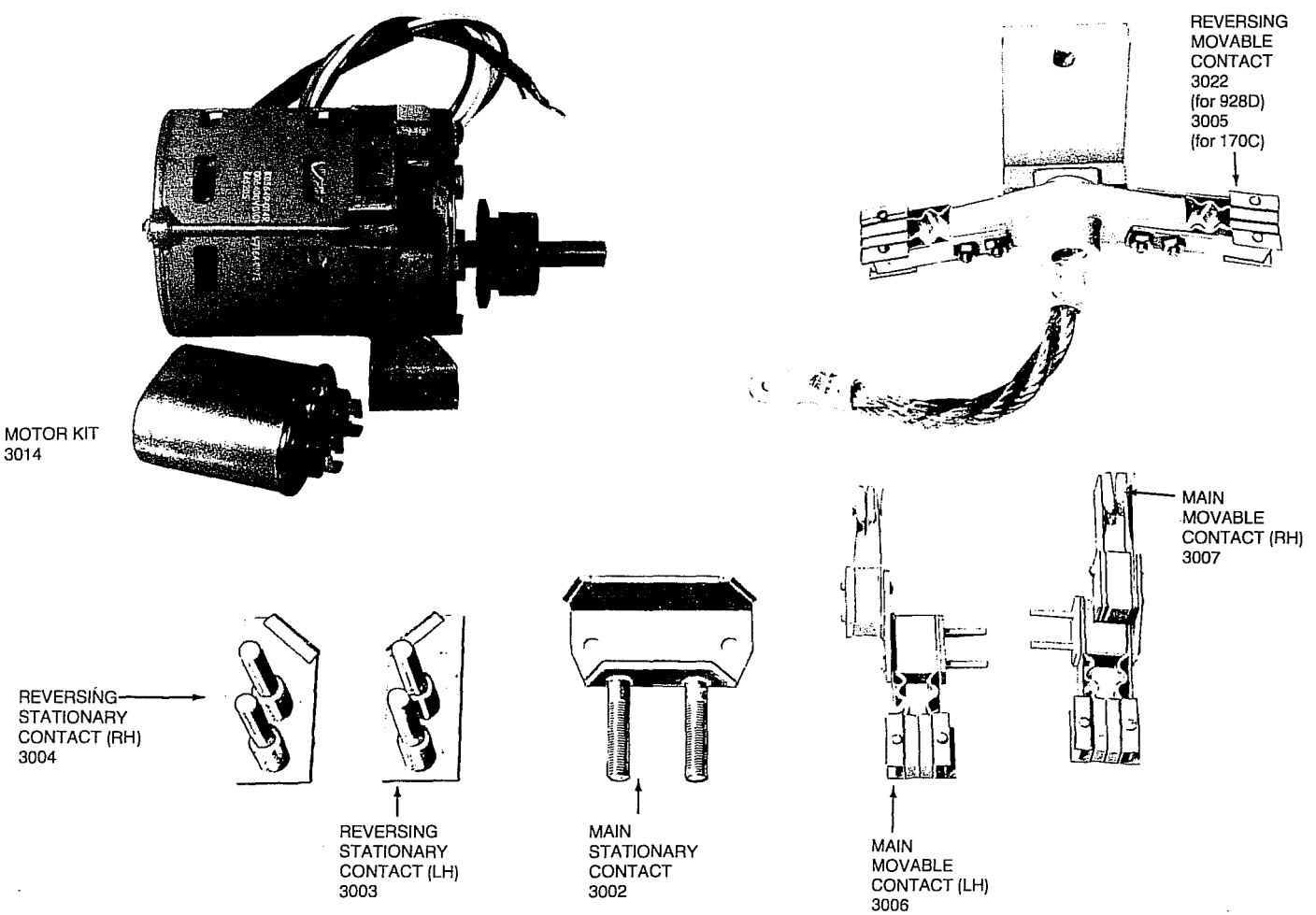

Figure 6-2
Replacement parts for spring-drive tap changers 928D and 170C.

VR-32 Regulator and CL-4C Control

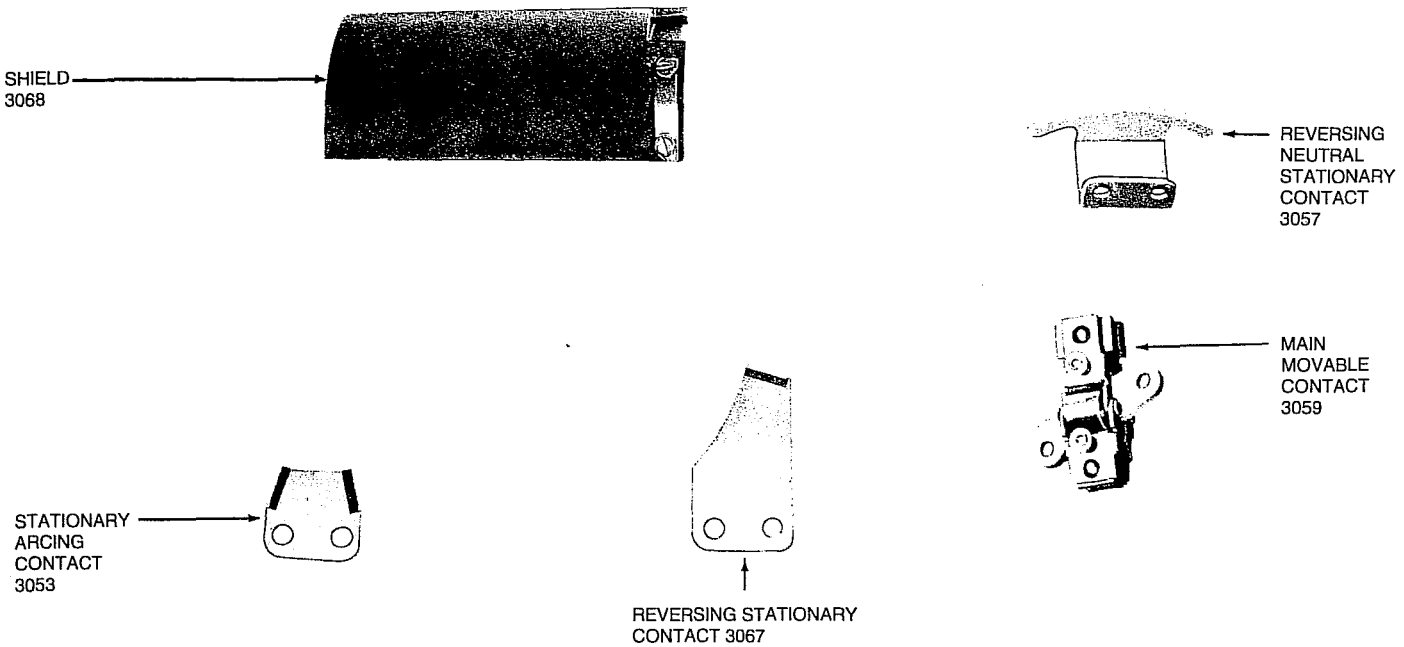

Figure 6-3
Replacement parts for direct-drive tap changer 770B.

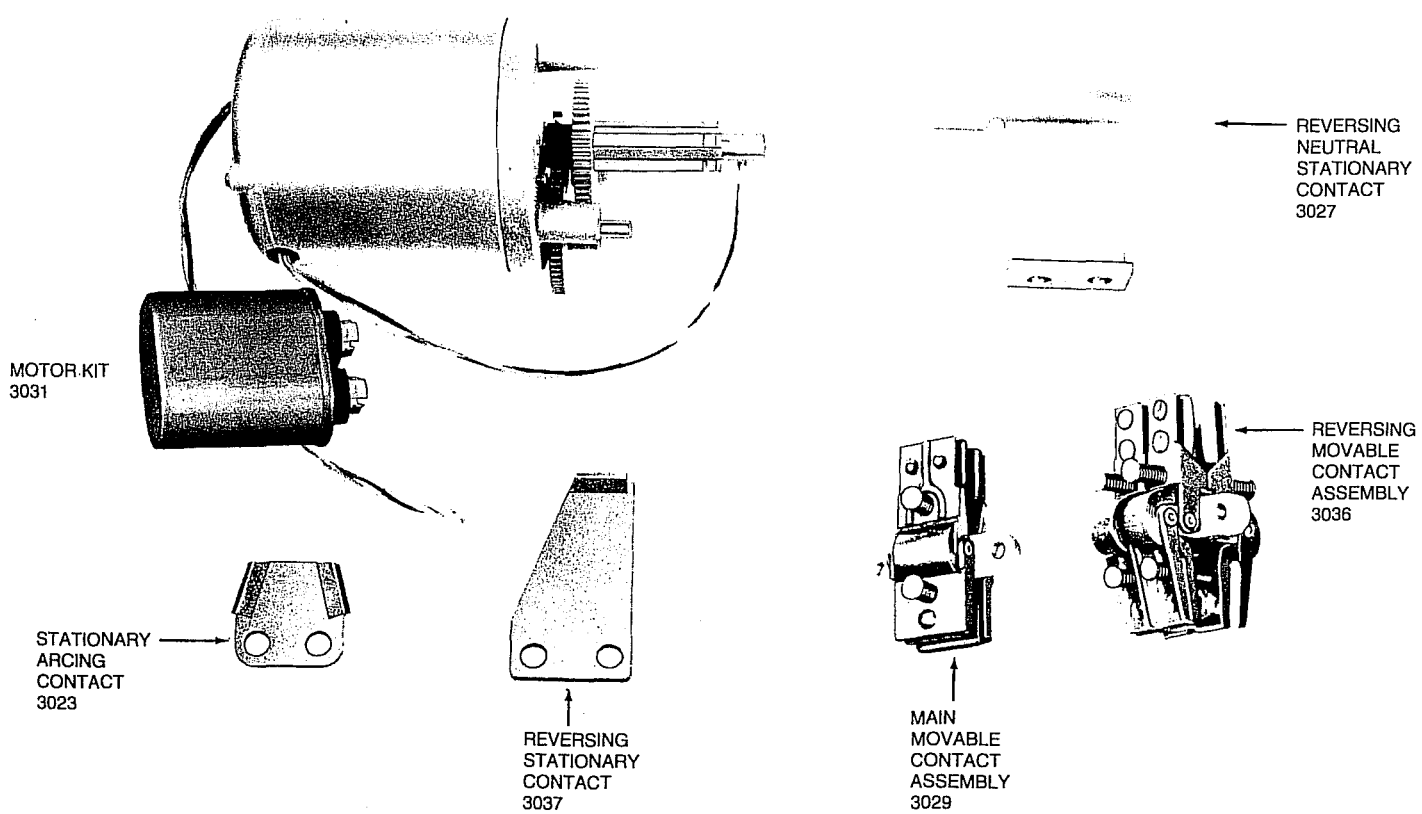

Figure 6-4
Replacement for direct-drive tap changer 660C.

NOTES:

APPENDIX - Section 7

SERIAL NUMBERS Serial numbers for McGraw-Edison regulators are coded in the following manner:

91 - Year of manufacture
Z - Factory location (Z-Zanesville)
A - Month of Manufacture
A = January,
B = February,
C = March,
D = April,
E = May,
F = June,
G = July,
H = August,
J = September,
K = October,
L = November,
N = December.
XXX - Arbitrary numbers and letters assigned per factory work order.
001 - Serial number of unit on a given factory work order (001-999)

91 Z A XXX 001

LIST OF TABLES

The following is a list of all tables found in this document and the page on which they are located:

Table Number	Table Title	Page Number
1-1	Shunt Arrester Application Data.	1-11
1-2	ADD-AMP Capabilities.	1-12
2-1	VR-32 Tap Connections and Voltage Levels.	2-4
2-2	Function Codes For CL-4C Control.	2-5
2-3	Function Code Dependent Upon Differential Voltage.	2-25
2-4	Security Codes.	2-32
2-5	Current Transformer Applications.	2-35
2-6	Function Codes For CL-4 Control (Field Trial).	2-45
3-1	Tap Changer Model Application Chart.	3-1
6-1	Spare Parts.	6-1

LIST OF SCHEMATIC DIAGRAMS

Figure	Description	Page
1-3	Typical Connection Diagrams	1-4
1-9	Power Circuit - Series Winding Located on the Source Side	1-13
1-10	Power Circuit - Series Winding Located on the Load Side	1-14
1-11	Power Circuit - Series Transformer	1-14
1-13	Internal Wiring of Spring-Drive Regulator with Series Winding Located on the Source Side	1-15
1-14	Internal Wiring of Direct-Drive Regulator with Series Winding Located on the Load Side	1-16
1-15	Internal Wiring of Regulator with Series Winding on the Input Side, with Differential Potential Transformer	1-17
1-16	Internal Wiring of Regulator with Load Winding on the Output Side, with Differential Potential Transformer	1-18
1-17	Rear Panel Signal Circuit	1-19
2-11	Co-Generation Regulation Points	2-28
2-15	Voltage Reduction Customer Contact Points	2-30
2-19	VR-32 Regulator and CL-4C Control Wiring Diagram	2-37
2-20	VR-32 Regulator and CL-4C Control with D.P.T. Control Wiring Diagram	2-39
2-23	SCADA Connections to CL-4C Control	2-43
2-24	SCADA Connections Basic Scheme	2-44
2-25	Typical User Provided Voltage Reduction Module	2-44
2-26	Voltage Reduction Customer Contact Points	2-44
4-1	Junction Box Wiring Diagram	4-2

SECURITY CODES

The factory-set security codes are as follows:

Security Level	Security Code
0	No Code Required
1	1234
2	12121
3	32123

S225-10-4C

FUNCTION CODE	FUNCTION	SECURITY LEVEL CHANGE/RESET
FORWARD CONTROL SETTINGS		
00	Operation Counter	
01	Set Voltage (Forward)	2
02	Bandwidth (Forward)	2
03	Time Delay (Forward)	2
04	Line Compensation, Resistance (Forward)	2
05	Line Compensation, Reactance (Forward)	2
INSTANTANEOUS METERING OPTION		
06	Load Voltage, Secondary	
07	Source Voltage, Secondary*	
08	Compensated Voltage, Secondary	
09	Load Current, Primary	
10	Load Voltage, Primary kV	
11	Source Voltage, Primary kV*	
12	Percent Regulation*	
13	Power Factor	
14	kVA Load	
15	kW Load	
16	kVAR Load	
17	Line Frequency	
18	Voltage Harmonics (3,5,7,9,11)	
19	Current Harmonics (3,5,7,9,11)	
FORWARD DEMAND METERING		
20	Load Voltage Demand (H,L,P)	1
21	Compensated Voltage Demand (H,L,P)	1
22	Load Current Demand (H,L,P)	1
23H	Power Factor @ Max kVA Demand	
23L	Power Factor @ Min kVA Demand	
24	kVA Load Demand (H,L,P)	1
25	kW Load Demand (H,L,P)	1
26	kVAR Load Demand (H,L,P)	1
27	Max % Boost (Min % Buck)*	1
28	Max % Buck (Min % Boost)*	1
REVERSE DEMAND METERING*		
30	Load Voltage Demand (H,L,P)	1
31	Compensated Voltage Demand (H,L,P)	1
32	Load Current Demand (H,L,P)	1
33H	Power Factor @ Max kVA Demand	
33L	Power Factor @ Min kVA Demand	
34	kVA Load Demand (H,L,P)	1
35	kW Load Demand (H,L,P)	1
36	kVAR Load Demand (H,L,P)	1
38	**MASTER DEMAND RESET**	1
CONFIGURATION		
40	Regulator Identification	2
41	Regulator Configuration	2
	0=Wye, 1=Delta Lag, 2=Delta Lead	
42	Control Operating Mode	2
	0=Sequential	
	1=Time Integrating, 2=Voltage Averaging	
43	System Line Voltage	2
44	Potential Transformer Ratio	2
45	Current Transformer Primary Rating	2
46	Demand Time Interval	2
CALIBRATION		
47	Voltage Calibration	3
48	Current Calibration	3

KEY ENTRY ERROR CODES

If an error is made when entering or changing a parameter, a message such as ERROR 1 will be displayed. The following is a complete list of the error codes:

1 Input Value too Low
2 Input Value too High
3 Improper Security to Change
4 Invalid Security Code

FUNCTION CODE	FUNCTION	SECURITY LEVEL CHANGE/RESET
REVERSE CONTROL SETTINGS		
51	Set Voltage (Reverse)	2
52	Bandwidth (Reverse)	2
53	Time Delay (Reverse)	2
54	Line Compensation, Resistance (Reverse)	2
55	Line Compensation, Reactance (Reverse)	2
56	Reverse Sensing Mode	2
	0=Locked Forward	
	1 =Locked Reverse*	
	2=Reverse Idle	
	3=Bi-directional*	
	4=Neutral Idle*	
	5=Co-Generation	
57	Reverse Threshold	2
COMMUNICATIONS		
60	Data Port Baud Rate	2
61	Interface Port Baud Rate	2
62	Channel 1 Status	
63	Channel 2 Status	
64	Control Communications Address	2
65	Communications Port Baud Rate	2
66	Communications Port Handshake Mode	2
67	Communications Port Resynch Time Chars.	2
68	Communications Port Transmit Enable Delay	2
69	**REGULATION BLOCKING STATUS**	2
VOLTAGE REDUCTION		
70	Voltage Reduction Mode	2
	0=Off, 1=Local, 2=Remote	
	3=Automatic With Remote Override	
71	% Voltage Reduction In Effect (Read only)	
72	Local Voltage Reduction %	2
73	Remote Reduction Setting #1	2
74	Remote Reduction Setting #2	2
75	Remote Reduction Setting #3	2
76	Automatic Reduction Setting #1	2
77	Automatic Reduction Setting #2	2
78	Percent Current For Automatic #1	2
79	Percent Current For Automatic #2	2
VOLTAGE LIMITER OPTION		
80	Voltage Limiting Mode	2
	0=Off, 1=High Limit Active Only	
	2=High and Low Limits Active	
81	High Voltage Limit	2
82	Low Voltage Limit	2
WATCHDOG DIAGNOSTICS		
90	Number of Defaults	
91	Self Test	
93	Number of EEPROM Corrections	3
94	Number of Resets	3
95	System Status Code (Read only)	3
	0 All Systems Good	
	1 EEPROM Write Failure	
	2 EEPROM Erase Failure	
	3 Frequency Detection Failure	
	4 No Sampling Interrupt	
	5 Analog-to-digital Converter Failure	
	6 Invalid Critical Parameters	
	7 No Source Voltage Detected	
	8 No Output Voltage Detected	
	9 No Source & Output Voltage Detected	
SECURITY ACCESS		
96	Level 1 Security Code	3
97	Level 2 Security Code	3
98	Level 3 Security Code	3
99	Enter Security Code	

NOTES:

*A differential P.T. or Source-side P.T. is required for these functions to be active.

(H,L,P) For demand values the Highest (maximum) value since last reset, the Lowest (minimum) value since last reset, and the Present value are stored. Scroll to L and P values.

COOPER
Cooper Power Systems

Voltage Regulators

Cooper Power System's VR-32 Regulator and CL-2A Control Installation, Operation and Maintenance Instructions Parts Replacement Information

S225-10-5
Service Information

TABLE OF CONTENTS

VR-32 REGULATORS - SECTION 1

Introduction **1-3**
Receiving **1-3**
INSPECTION **1-3**
UNLOADING **1-3**
STORING **1-3**
Installation **1-3**
PRE-INSTALLATION INSPECTION **1-3**
NAMEPLATE **1-4**
SYSTEMS CONNECTIONS **1-4**
MOUNTING **1-5**
PLACING A REGULATOR INTO SERVICE . **1-5**
Removal From Service **1-6**
DETERMINING NEUTRAL POSITION **1-6**
DE-ENERGIZING THE REGULATOR **1-6**
Maintenance Program **1-6**
PERIODIC INSPECTIONS **1-6**
REMOVAL OF CL-2A FRONT PANEL **1-7**
REPLACEMENT OF CL-2A FRONT PANEL **1-7**
UNTANKING THE REGULATOR **1-7**
RETANKING THE REGULATOR **1-7**
MAINTENANCE **1-8**
Construction **1-8**
SURGE PROTECTION **1-8**
POSITION INDICATOR & ADD-AMP **1-8**
INTERNAL CONSTRUCTION & WIRING DIAGRAMS **1-10**

CL-2A REGULATOR CONTROL - SECTION 2

Introduction **2-2**
Specifications **2-2**
Pre-Installation Operational Check **2-2**
In-Service Calibration Check **2-2**
Setting the CL-2A Control for Service **2-3**
Control Operation Modes **2-4**
CL-2A Control Operation **2-4**
DEVELOPMENT OF POTENTIALS **2-7**
LINE DROP COMPENSATOR **2-9**
MOTOR CIRCUIT **2-10**
Automatic/Manual Operation **2-10**
Supervisory Control and Data Acquisition (SCADA) **2-10**
Voltage Reduction **2-11**
Retrofitting a CL-2A Control **2-11**

VR-32 REGULATOR TAP CHANGER - SECTION 3

Tap Changer Operation **3-1**
Motor **3-1**
Reversing Switch **3-1**
Drive Mechanisms **3-2**
Contacts **3-3**
Operating Sequence **3-3**

TROUBLE SHOOTING GUIDE - SECTION 4

Complete Regulator In Service **4-1**
EXTERNAL CHECK **4-1**
DEFINING THE PROBLEM **4-1**
JUNCTION BOX TROUBLE SHOOTING **4-1**
POSITION INDICATOR REPLACEMENT **4-2**
FRONT PANEL TROUBLE SHOOTING **4-3**
CIRCUIT BOARD TROUBLE SHOOTING **4-4**
CIRCUIT BOARD REMOVAL **4-10**

ACCESSORIES - SECTION 5 ..... **5-1**
SPARE PARTS - SECTION 6 ..... **6-1**
APPENDIX - SECTION 7 ..... **7-1**
Serial Numbers **7-1**
List of Tables **7-1**
List of Diagrams **7-1**

Refer to page 1-2 of these instructions for the definitions of warning and caution alerts.These instructions do not claim to cover all details or variations in the equipment, procedure, or process described, nor to provide direction for meeting every possible contingency during installation, operation, or maintenance. When additional information is desired to satisfy a problem not covered sufficiently for the user's purpose, please contact your Cooper Power Systems representative.

October 1992, reprint of 2/91 • 1992 ©Cooper Power Systems, Inc.

1. CLAMP-TYPE TERMINALS
2. THREADED-STUD BUSHING TERMINALS
3. BUSHINGS
4. POSITION INDICATOR
5. REGULATOR LIFTING LUGS
6. UPPER FILTER PRESS CONNECTION
7. ARRESTER MOUNTING BOSSES
8. BALL-TYPE OIL SIGHT GAUGE
9. CONTROL CABLE
10. NAMEPLATES (2)
11. GROUND BOSSES (2)
12. DRAIN VALVE & OIL SAMPLING DEVICE
13. BOLT-DOWN PROVISIONS
14. CONTROL
15. CONTROL ENCLOSURE
16. POLE-TYPE MOUNTING BRACKETS
17. ENCLOSURE SUPPORT BAR
18. HANDHOLE COVER
19. MOV-TYPE SERIES ARRESTER
20. JUNCTION BOX
21. INTERNAL ASSEMBLY LIFTING LUGS
22. PANEL-TYPE RADIATORS (Not Shown)

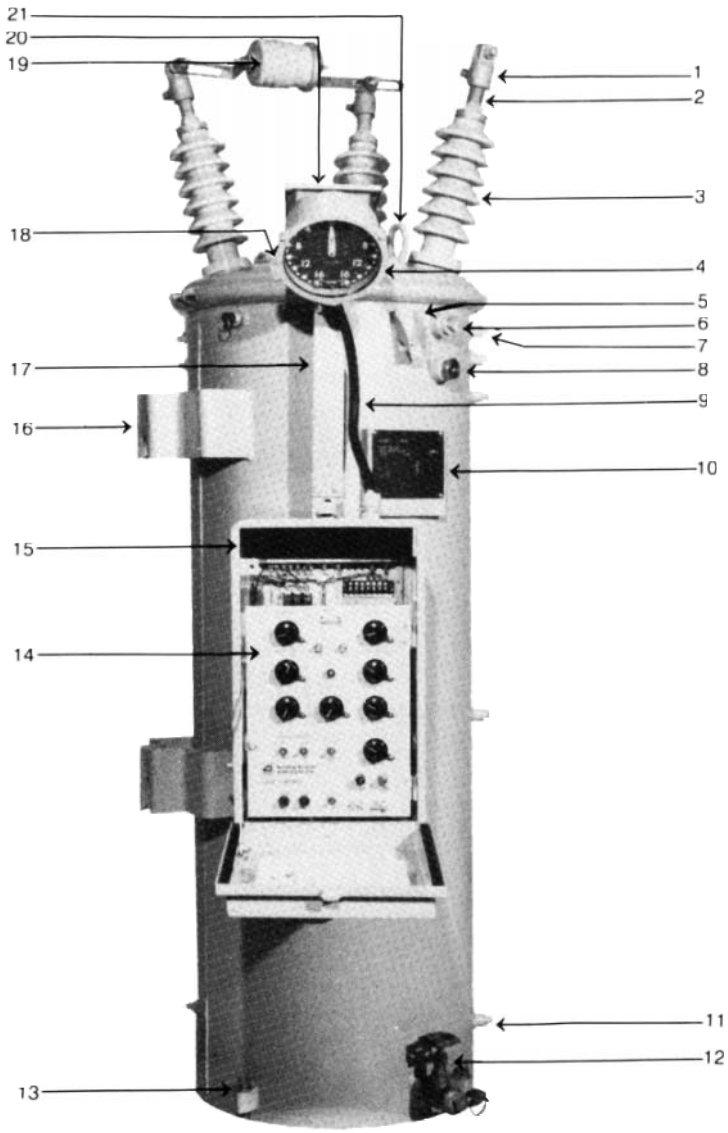

Figure 1-2
Features of the VR-32 Voltage Regulator.

DEFINITIONS OF ALERTS: PLEASE READ THE FOLLOWING CAREFULLY AND HEED THE WARNINGS CAUTIONS, AND NOTICES HEREIN.

WARNING: A WARNING describes a potentially hazardous situation which, if not avoided, could result in death or serious injury.

CAUTION: A CAUTION describes a potentially hazerdous situation which, if not avoided, could result in minor or moderate injury.

NOTICE: A NOTICE describes a situation, which if not avoided could result in damage to the equipment with no likelihood of personal injury.

VR-32 VOLTAGE REGULATORS - Section 1

INTRODUCTION

Cooper Power System's VR-32 feeder voltage regulators are regulating auto-transformers. They regulate line voltage from ten-percent raise (boost) to ten-percent lower (buck) in 32, approximately 5/8 % steps.

Cooper Power System's regulators are supplied with the following standard features:

Dual-rated 55/65°C rise.
ADD-AMP capabiilty.
Unit construction.
Sealed-tank construction.
Pressure relief device.
High-creep bushings with clamp-type terminals.
MOV-type external series arresters.
Shunt arrester mounting bosses.
Two nameplates.
Gil sight gauge.
Upper filter press connection.
Drain valve and oil-sampling device.

The 65°C rise insulation system and the sealed-tank construction allow for a BONUS CAPACITY 12% above the 55°C normal rating without loss of normal insulation life. The BONUS CAPACITY is stated on the nameplate (such as 167/187 kVA for a nominal 167 kVA regulator), and is available when the ADD-AMP feature is not in use. All Cooper Power System's regulators are manufactured and tested to ANSI standard C57.15.

The unit construction, which suspends the internal assembly and the control enclosure form the cover, allows for ease of inspection and maintenance.

There are three types of step-voltage regulators: source-side series winding, load-side series winding, and series transformer. Cooper Power System's Regulators are usually equipped with an equalizer winding. The nameplates located on the tank and control box clarify the power circuit involved.

RECEIVING

Inspection

Prior to shipment, the regulator is thoroughly tested and inspected at the factory. Immediately upon receipt of the regulator shipment, before unloading, a thorough inspection should be made for damage, evidence of rough handling, or shortages. The position indicator, junction box, arrester, radiators, and bushings should all be inspected for evidence of damage. **Should this initial inspection reveal evidence of rough handling, damage, or shortages, it should be noted on the Bill of Lading and a claim should immediately be made with the carrier.** Also, notify Cooper Power Systems, 2300 Badger Drive, Waukesha, Wisconsin 53188, attention Service Manager.

Unloading

When an overhead crane is used for unloading, the regulator must be lifted by means of a sling and spreader bar utilizing the tank-mounted lifting lugs which are shown in Figure 1-2. Do not lift the entire unit with the lifting eyes on the cover. The lifting eyes are only to be used to untank the internal assembly which is attached to the cover.

WARNING: The cover may fracture if the cover-mounted lifting eyes are used to fit the entire unit. Lift the entire unit only with the tank-mounted lifing lugs.

Storing

If the regulator is not to be placed into immediate use, it can be stored with minimal precautions. Locate the unit where the possibility of mechanical damage is minimized.

INSTALLATION

Pre-installation Inspection

Before connecting the regulator to the line, make the following inspection:

1 . Check the oil sight gauge. Look for visible signs of oil leakage.
2. Examine the series arrester for damage. If damaged, install a new arrester of the same voltage rating.
3. Inspect the porcelain bushings for damage or leaking seals. If there is a suspicion that moisture has entered the unit, remove the handhole cover and inspect for evidence of moisture such as rust or watertracks in the oil. If moisture has entered the tank, dry the regulator and filter the oil before putting the unit in service. The oil must test 26 kV minimum in a standard gap (ASTM D 877). Be sure to properly replace the handhole cover.

CAUTION: Do not subject tap changer to temperatures above 150°F. To do so may cause damage to the contact panels, resulting in misalignment of the contacts.

4. If the regulator has been stored for some time, test the dielectric strength of the oil according to ASTM D-877.
5. The regulator may be energized at rated line voltage (with caution) and an operational check, page 1-8, can be performed. (This procedure is optional.)
6. A Hi-pot test may be done to insure adequate electrical clearances to ground. (This procedure is optional.)

VR-32 Regulator and CL-2A Control

Nameplate

The VR-32 nameplate (Figure 1-3) prominently displays the 55/65°C temperature rise rating of the regulator. The sealed-tank system along with the 65°C rise winding insulation allows the regulator to be used at this dual rating. This provides an additional 12 percent capacity without loss of normal insulation life.

The nameplate is stamped with pertinent rating information and includes the schematic diagram of the VR-32 internal design. Refer to the nameplate to determine the correct adjustment for the required regulated load voltage. A movable peg on the nameplate indicates the tap and load voltage in use.

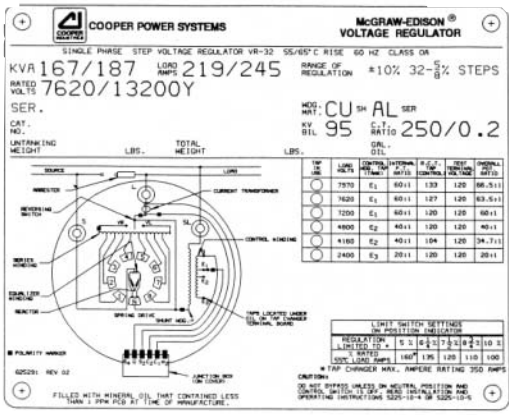

Figure 1-3.
Nameplate.

Systems Connections

A regulator can regulate a single-phase circuit, or one phase of a three-phase wye or delta circuit. Two regulators connected phase-to-phase in open-delta, or three regulators connected phase-to-phase in closed-delta, can regulate a three-phase, three-wire delta circuit. When connected in wye, three regulators can regulate a three-phase, four-wire multi-grounded wye circuit. Three regulators cannot be connected in wye on three-phase, three-wire circuits because of the probability of neutral shift. Typical connection diagrams are illustrated in Figure 1-4.

WARNING: Connect the "S" bushing to the SOURCE, the "L" bushing to the LOAD, and the "SL" bushing to NEUTRAL. To do otherwise may cause excessively high or low voltage on the load side of the regulator or cause severe damage to the regulator.

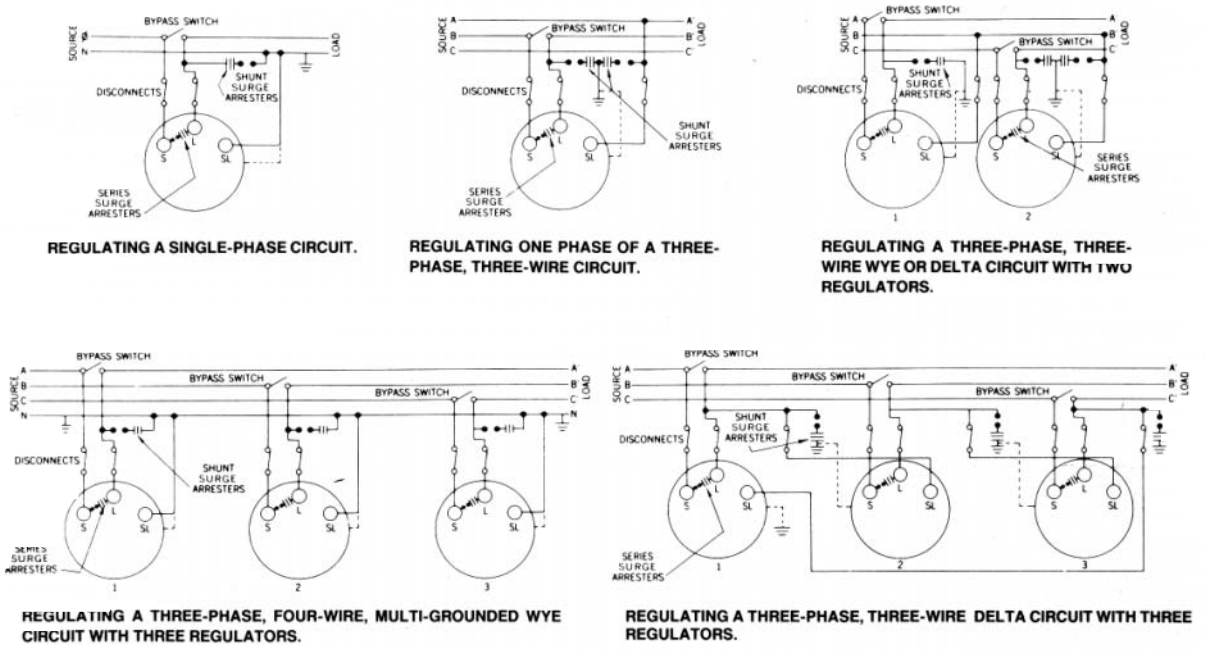

Figure 1-4.
Typical connections diagrams.

NOTE: Individual switches are shown for the bypass and disconnect functions. However, a regulator-bypass-disconnect switch can be used in each phase to perform the bypassing and disconnecting operations in sequence. Each of these switches replaces one bypass and two disconnect switches shown in the diagrams.

Mounting

A regulator can be mounted on a pole, cross arm platform, or elevating structure (optional). Regulators are normally provided with either pole mounting brackets or a station platform according to the rating. This information is available in Table 3-1, page 3-1, by noting the S(Substation) suffix to the kVA. A Cooper Power System's elevating structure (Figure 1-4) can be used to simplify substation installation of regulators requiring a specific live part-to-ground clearance.

The regulator control can be mounted on the regulator tank, or at a point remote from the unit. Rubber-covered cable is available in lengths of 15, 20, 25, 30, and 35 ft for interconnection between the control and the regulator.

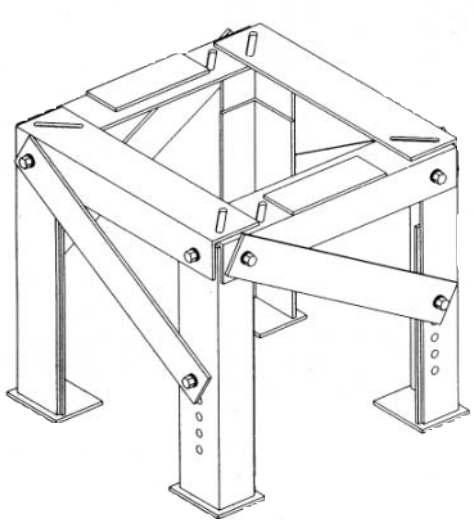

Figure 1-5.
Elevating structure.

Placing A Regulator Into Service

Regulators can be placed in service without interrupting load continuity.

WARNING: Closing the bypass switch with the tap changer off neutral will short circuit part of the series winding. Before closing the bypass switch, the regulator must be on NEUTRAL and the control switch set to OFF.

Procedure A should be followed when one bypass switch and two disconnect switches are used. Procedure B should be followed when a regulator bypass-disconnect switch is used.

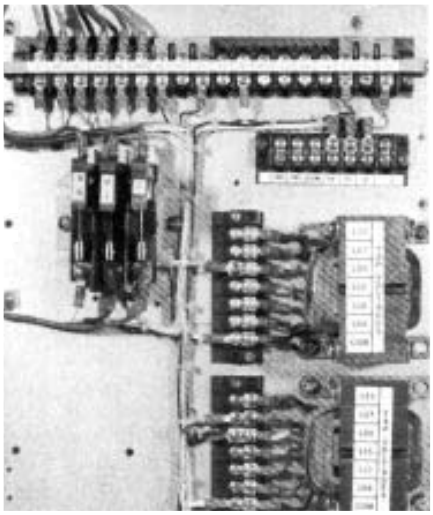

Figure 1-6.
Knife switches and TB1 (with optional V6 knife switch and RCT2).

CAUTION: When installing a regulator, solidly ground both the regulator tank AND the control. Failure to do so may cause damage to the regulator and/or control due to current surges and may subject personnel to electrical shock.

A threaded stud is provided at the bottom of the control enclosure and a ground pad is provided on the side of the enclosure, for grounding purposes.

PROCEDURE A: ONE BYPASS SWITCH AND TWO DISCONNECT SWITCHES

1. Verify from the regulator nameplate that the control circuit is connected for the proper regulated load voltage.
2. Set the POWER switch to OFF and the CONTROL switch to OFF.
3. The knife switches on the back panel should be set with the V1 (potential switch) [and V6 if present] closed (pushed in), and the C (CT shorting switch) open (pulled out). See Figure 1 -5.
4. Close the SOURCE-LOAD (SL) disconnect switch. (Delta applications only).
5. Close the SOURCE (S) disconnect switch.
6. Set the POWER switch to INTERNAL and the CONTROL switch to MANUAL.
7. Lift the RAISE-LOWER switch to operate the tap changer two or three steps, then depress the RAISE-LOWER switch to return the tap changer to neutral position. (These steps verify the mechanism is functional.) When on neutral, the NEUTRAL LAMP will glow and the position indicator will point to zero.
8. **With the regulator in neutral position,** set the CONTROL switch to OFF, set the POWER switch to OFF, open the V1 knife switch (back panel) [and V6 if present], and remove the 6A motor fuse.

9. Close the LOAD (L) disconnect switch.
10. Open the BYPASS Switch.
11. Replace the 6_A motor fuse, close the V_1 knife switch [and V_6 if present] and set the POWER switch to INTERNAL.
12. Set the AUTO/OFF/MANUAL switch to AUTO.
13. Set the VOLTAGE setting to call for one step of voltage correction.
14. If satisfactory, call for one step of voltage correction in the opposite direction.
15. If both operations are satisfactory, set the VOLTAGE SETTING control at the desired level.

PROCEDURE B: **REGULATOR BYPASS DISCONNECT SWITCH**

1. Verify from the regulator nameplate that the control circuit is connected for the proper regulated load voltage.
2. Set the AUTO/OFF/MANUAL switch to MANUAL and the POWER switch to EXTERNAL.
3. The knife switches on the back panel should be set with the V_1 (potential switch) [and V_6 if present] open (pulled out), and the C (CT shorting switch) closed (pushed in). See Figure 1-6.
4. Apply 120 volts to the EXTERNAL SOURCE terminals, if 120 volts is available. If not, proceed to Step 7, below.
5. Lift the RAISE/LOWER switch to operate the tap changer two or three steps, then depress the RAISE/LOWER switch to return the tap changer to neutral position. (These steps verify the mechanism is functional.) When on neutral, the NEUTRAL LAMP will glow and the position indicator will point to zero.
6. Remove the 120 volts from the EXTERNAL SOURCE terminals.
7. **With the regulator in neutral position,** set the AUTO/OFF/MANUAL switch to OFF, set the POWER switch to OFF, and remove the 6_A motor fuse.
8. Close the SOURCE-LOAD (SL) disconnect switch. (Delta applications only).
9. Close the regulator bypass-disconnect switch.
10. Replace the 6_A motorfuse, close the V_1 knife switch [and V_6 if present], open the C knife switch, and set the POWER switch to INTERNAL.
11. Set the AUTO/OFF/MANUAL switch to AUTO.
12. Set the VOLTAGE SETTING to call for one step of voltage correction.
13. If satisfactory, call for one step of voltage correction in the opposite direction.
14. If both operations are satisfactory, set the VOLTAGE SETTING control at the desired level.

REMOVAL FROM SERVICE

Determining Neutral Position

WARNING: Closing the bypass switch with the tap changer off neutral will short circuit part of the series winding. Before closing the bypass switch, the regulator must be on NEUTRAL and the control switch set to OFF.

Return the regulator to neutral. The regulator can be safely removed from service without interrupting load continuity only on the neutral position. It is wise to employ more than one method to determine whether a regulator is on neutral.

To Return The Regulator To Neutral

1. Use the control to RAISE or LOWER the regulator until it is in the neutral position.
2. When on NEUTRAL, the NEUTRAL LAMP will light and the POSITION INDICATOR will point to zero.
3. To stop the regulator on the neutral position, the CONTROL switch should be turned to OFF during the switching operation from position “1 “ to position zero. Switching to OFF prior to reaching the neutral position prevents overshoot.
4. The POSITION INDICATOR and NEUTRAL LIGHT **MUST BOTH** indicate neutral.

WARNING: A regulator should be bypassed with the line energized ONLY if BOTH the position indicator AND the neutral light indicate NEUTRAL. If both do not indicate NEUTRAL, the line should be de-energized to avoid shorting part of the series winding.

WARNING: Always use the CONTROL switch (labeled AUTO/REMOTE-OFF-MANUAL) to operate the regulator, not the POWER switch. Failure to do so may result in the tap changer stepping off of neutral immediately upon being energized.

De-energizing The Regulator

Once it has been established that the regulator is on neutral, immediately proceed with the following steps:

1. Turn the CONTROL switch to OFF.
2. Turn the control POWER switch to OFF.
3. Open the V_1 knife switch (and V_6 if present) on the back panel (Figure 1-5).
4. Remove the 6A motor fuse.
5. Close the BYPASS switch.
6. Open the SOURCE(S) disconnect switch.
7. Open the LOAD (L) disconnect switch.
8. Open the SOURCE-LOAD (SL) disconnect switch. (Delta application only.)

Note: If a regulator bypass disconnect is used in place of three separate switches, steps 5, 6, and 7 are carried out in one operation.

MAINTENANCE PROGRAM

Periodic Inspections

Step-type voltage regulators are designed to provide many years of trouble-free operation. Proper operation of the regulator can be checked without removing the unitfrom service. Using the manual mode of operation, run the regulator several steps in the raise direction, and then turn the control back to auto. After the time delay programmed into the control expires, the regulator should return within bandwidth (which will normally be the same position you started from, unless the incoming voltage is currently varying). When this has been completed, use the manual mode of operation to run the regulator several steps in the lower direction, and then turn the control back to auto. After the time delay, the regulator should return back within bandwidth.

If the regulator will not operate properly, a substitute control can be tried before removing the unit from service. Refer to the following sections for proper procedures on removing and replacing the CL-4C Control.

Since the usable life of a regulator is affected by its application, it may be desirable to periodically remove the regulator from service and untank the unit to verify contact wear, oil dielectric, etc. The time for this will vary, depending on a specific user's past experience.

Removal of CL-2A Front Panel

The CL-2A front panel may be removed from the regulator with the regulator energized.

To open the front panel, unscrew the panel locking screw on the left side of the panel. This allows the control to swing open on its hinges. With the control open, the back panel is readily accessible. The design of the control enclosure, back panel, and front panel enable easy replacement of the front panel, leaving the back panel, control enclosure, and cable intact. To remove the front panel, proceed as follows:

1 . Push closed the current shorting switch, C. This shorts out the secondary of the regulator C.T.

WARNING: Push the C shorting switch closed before attempting to remove the fanning strip. Failure to do so will open the regulator CT circuit and may produce a flashover on the control.

2. Pull open the disconnect switch, V_1 (and V_6 if present). This de-energizes the CL-2A front panel.
3. Loosen the screws on the interconnecting terminal strip (TB2) at the bottom of the back panel.
4. Pull the fanning strip free from the terminal strip.

The CL-2A can now be lifted off its hinges. Care should be taken to prevent damage to the CL-2A front panel while in transit and/or storage.

Replacement of CL-2A Front Panel

To replace a CL-2Afront panel in the control enclosure, follow the procedure outlined below:

1. Engage the front panel on the enclosure hinges.
2. Insert the fanning strip from the front panel wiring harness under the TB2 terminal block screws, matching terminal indentification.
3. Tighten the screws on the interconnecting terminal block.
4. Push closed the disconnect switch, V_1 (and V_6 if present).
5. Pull open the current shorting switch, C.
6. Close the panel and tighten panel locking screw.

Untanking The Regulator

1. Manually run the tap changer to neutral, if possible. If not possible, note position indicator reading before proceeding to untank.
2. Remove the two mounting bolts holding the control cabinet to tank.
3. Remove the series arrester. Release internal pressure using the pressure relief device on the side of the regulator.
4. Free cover by removing clamping ring or cover bolts.
5. Attach sling or hooks with spreader bar (Figure 1-7) to lifting eyes and raise the cover, with the attached core-and-coil assembly, until the top of the coil is approximately one inch under oil. The control cabinet should be guided to avoid snagging during lifting.

CAUTION: Before intanking a fan-cooled regulator, (1) lower the oil level below the thermometer, then (2) remove the thermometer will. Failure to do so will result in damage to the thermometer will and/or spillage of oil when the internal assembly is lifted.

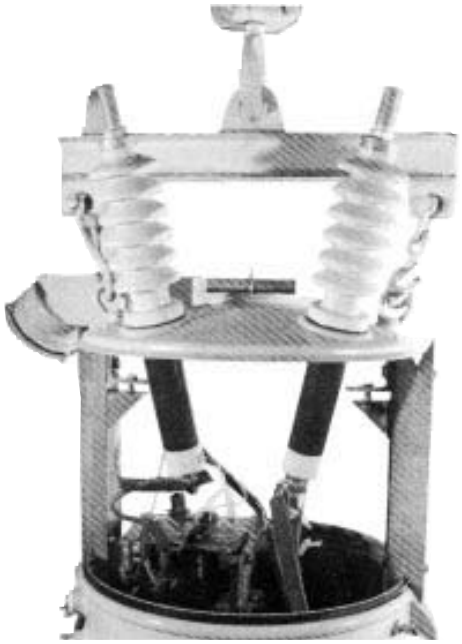

Figure 1-7.
Untanking.

It is recommended that the main core-and-coil assembly never be removed from the oil, except when a winding failure occurs. Blocking between the cover and tank lip should be employed to suspend the core-and-coil assembly within the oil until inspection of the tap changer or other maintenance is complete.

Retanking The Regulator

Retank the regulator as follows:

1. Be sure the position indicator shows the present position of the tap changer. If not, remove the indicator cable in the junction box from the position indicator shaft after loosening the set screw. Rotate the indicator shaft until the proper position is reached, then tighten the set screw. Verify coordination of position indicator with tap changer in neutral position (control neutral light on).
2. Check the gasket seat surfaces on the cover and tank, and wipe clean. Wipe the gasket and position it on the tank lip. Loosen **horizonta**l side channel bolts to insure proper seating of regulator in tank and cover seal.

3. Raise the cover assembly and attached components over the tank. Make certain of proper orientation.
4. Lower the unit, positioning the channels in the tank guides. Guide the control cabinet onto its brackets.
5. Seat the unit in the tank. Tighten the cover clamps or bolts and replace the control mounting bolts.
   NOTE: Tap the cover with a rubber hammer around the edge to properly seal the gasket while tightening the cover band.
6. Check and retighten horizontal side channel bolts through handhole, if required.

Maintenance

The following is the recommended maintenance program for a regulator that has been untanked:

1. Check all connections for tightness.
2. Check all contacts for wear (refer to *S225-10-2).*
3. Avoid removing the main core-and-coil assembly from the oil, except when a winding failure occurs. Blocking between the cover and tank lip should be employed to suspend the core-and-coil assembly within the oil until inspection of the tap changer or other maintenance is complete.

WARNING: When the internal assembly is lifted for inspection or maintenance, blocking should be placed between the cover and the top of the tank to keep the assembly from falling should lifting apparatus fail.

If it is necessary to remove the main core-and-coil assembly from the oil, the following steps should be followed.

A. The tap changer must not be subjected to temperatures above 66°C. (150°F). It must be removed if the unit is baked at higher temperatures.
B. If the unit is out of oil more than four hours, it must be rebaked for a minimum of 24 hours at 100°C (212°F). The maximum number of times a unit should be rebaked is twice.
C. Within four hours after bake, the unit should be retanked and filled with oil.
D. It is recommended that a vacuum be pulled on the unit for at least one hour (2 mm. of vacuum or better) after the unit is completely refilled with oil. If vacuum processing is not available, allow the entire internal assembly to soak in the oil for at least five days before energizing.
E. Do not test the unit until either the vacuum processing or the soaking has been completed.

4. Consider upgrading controls to latest design.

CONSTRUCTION

Surge Protection

SERIES SURGE ARRESTER

All VR-32 regulators are equipped with a bypass arrester connected across the series winding between the source (S) and load (L) bushings. This bypass arrester limits the voltage developed across the series winding during lightning strikes, switching surges, and line faults. The series surge arrester can be seen in Figure 1-2. A MoV-type series surge arrester of 2.2 kV offers series winding protection on all regulators except those rated over 14,400 volts which have a 3/4.5-kV MoV-type series surge arrester.

SHUNT ARRESTERS

A shunt arrester is an optional accessory on the VR-32 regulator for protection of the shunt winding. The shunt arrester is a direct connected arrester mounted on the tank and connected between the "L" bushing and ground. For additional protection a shunt arrester may also be installed between the S (source) bushing and ground.

For best results, locate these arresters on the mounting pads provided on the tank near the bushing. Ground the arrester and the regulator tank to the same ground connection using the shortest cable possible. Shunt arrester application data is listed in Table 1-1.

TABLE 1-1
Shunt Arrester Application Data.

Regulator Voltage Rating	Nominal System Voltages (volts)		Recommended MOV Shunt Arrester Ratings (kV)
	Delta or Single-Phase	Multi-Grounded Wye	
2500/4330Y	2400 2500	2400/4160 2500/4330	3
5000/8660Y	4160 4330 4800 5000	4160/7200 4330/7500 4800/8320 5000/8660	6
7620/13200Y	6900 7200 7620 7970	6900/11950 7200/12470 7620/13200	9
		7970/13800	10
13800	12000 12470 13200 13800 14400		15
14400/24940Y		13800/23900 14400/24940	18
19920/34500GrdY		19920/34500	27

Position Indicator & ADD-AMP Capability

The position indicator (Figure 1-8) is mounted on a junction box on the cover of the regulator and is directly connected to the tap changer by a flexible drive shaft passing through the junction box and terminal board via a sealing gland.

The indicator face is graduated in steps, numbered 1 through 16, on each side of zero, which designates neutral. Drag hands indicate the maximum and minimum positions attained during raise and lower operations. The drag hands are automatically reset around the position indicator hand by operating the drag hand reset switch on the control front panel.

The ADD-AMP feature of VR-32 regulators allows increased current capacity by reducing the regulation range. This is accomplished by setting limit switches in the position indicator to prevent the tap changer from traveling beyond a set position in either raise or lower directions. The limit switches have scales graduated in % regulation, and are adjustable to specific values of 5, 6-1/4, 7-1/2, 8-3/4, and 10% regulation to alter the regulation range. The five possible load current ratings associated with the reduced regulation ranges are summarized in Table 1-2. At each setting a detent stop provides positive adjustment. Settings other than those with stops are not recommended. The raise and lower limits need not be the same value.

Figure 1-8.
Position Indicator.

Setting The Limit Switches

Before setting the limit switches, be sure the new settings will not conflict with the present tap changer position. Do not set the switches below the indicated tap changer position. For example, if the indicator hand is at step 12 and the change to be made is from plus or minus 10% (step 16) to plus or minus 5% (step 8), run the tap changer back to step 7 or less, manually. Then set the limit switches for plus or minus 5% regulation.

Limit switches should be set in anticipation of the maximum deviation of primary voltage. For example, on a circuit where 7200 volts is to be maintained, plus or minus 10% will permit voltages between 6480 and 7920 to be regulated effectively. For voltages outside of this range, the regulator will not be able to return the voltage to the preselected level, in this case 7200 volts. The tap changer will have stepped to the maximum tap position and will be unable to regulate further. Five % regulation would accommodate circuit voltages between 6840 and 7560, maintaining 7200 volts for all voltages in this range.

To set the limit switches. follow this two-step procedure:

1. Loosen the captive bezel securing screws and swing the bezel open.
2. Lift the limit switch adjustment lever free of the detent and slide it to the new setting allowing the lever to snap into the detent stop.

TABLE 1-2
ADD-AMP Capabilities.

Rated Volts	Rated kVA	Load Current Ratings (amps) Regulation Range				
		±10%**	±8-3/4%	±7%	±6-1/4%	±5%
2500	25	100/112	110	120	135	160
	50	200/224	220	240	270	320
	75	300/336	330	360	405	480
	100	400/448	440	480	540	640
	125	500/560	550	600	668	668
	167	668	668	668	668	668
	250	1000/1120	1000	1000	1000	1000
	333	1332/1492	1332	1332	1332	1332
	416.3	1665/1865	1665	1665	1665	1665
5000	25	50/56	55	60	68	80
	50	100/112	110	120	135	160
	100	200/224	220	240	270	320
	125	250/280	275	300	338	400
	167	334/374	367	401	451	534
	250	500/560	550	600	668	668
	333	668	668	668	668	668
	416.3	833/900	833	833	833	833
7620	38.1	50/56	55	60	68	80
	57.2	75/84	83	90	101	120
	76.2	100/112	110	120	135	160
	114.3	150/168	165	180	203	240
	167	219/245	241	263	296	350
	250	328/367	361	394	443	525
	333	438/491	482	526	591	668
	416.3	548/614	603	658	668	668
	500	656/668	668	668	668	668
	667	875/900	875	875	875	875
	833	1093/1224	1093	1093	1093	1093
13800	69	50/56	55	60	68	80
	138	100/112	110	120	135	16
	207	150/168	165	180	203	24
	276	200/224	220	240	270	32
	414	300/336	330	360	405	48
	500	362/405	398	434	489	579
	552	400/448	440	480	540	64
	667	483/541	531	580	652	668
	833	604/668	664	668	668	668
14400	72	50/56	55	60	68	80
	144	100/112	110	120	135	16
	288	200/224	220	240	270	320
	333	231/259	254	277	312	37
	416	289/324	318	347	390	462
	432	300/336	330	360	405	480
	500	347/389	382	416	468	555
	576	400/448	440	480	540	64
	667	463/519	509	556	625	668
	720	500/560	550	600	668	668
	833	578/647	636	668	668	668
19920	50	25.1/28	28	30	34	40
	100	50.2/56	55	60	68	80
	200	100.4/112	110	120	135	16
	333	167/187	184	200	225	267
	400	200.8/224	220	240	270	32
	500	250/280	275	300	338	400
	667	335/375	369	402	452	536
	833	418/468	460	502	564	668

**55/65°C rise rating on VR-32 regulators gives an additional 12% increase in capacity if the tap changer's maximum current rating has not been exceeded. For loading in excess of the above values please refer to the factory.

INTERNAL CONSTRUCTION & WIRING DIAGRAMS

The main core-and-coil assemblies are of the shell-form configuration. The series winding on the input (source) side of the regulator (Figure 1-9) allows all windings (control, shunt, and series) to be located in one coil. The load voltage is read directly by the control winding.

Regulators that have the series winding on the output (load) side (Figure 1-10) possess an identical coil configuration, but have a separate potential transformer in lieu of a control winding installed on the output side. This voltage is then applied to the sensing circuit of the control.

The control winding is wound on the core to obtain a supply voltage for the tap changer motor and the control sensing circuits. Taps are available on this winding for large-step voltage-ratio correction.

The shunt winding is wound over top of the control winding with the series winding wound over top of the shunt winding. Most regulators, depending upon the rating, have an equalizer winding. If applicable, the equalizer winding is wound on the outside of the coil over the series winding.

Figure 1-11 shows a regulator power circuit with a series transformer. This design is utilized when the load current rating exceeds the tap changer rating. Figure 1-12 shows the internal construction of this regulator. In this type of design, the series transformer winding losses are a function of the load alone and are independent of the tap position. Because of this, limiting the range of voltage regulation does not reduce losses and therefore, the ADD-AMP feature is not applicable.

The preventive auto or bridging reactor is a core-form design, consisting of a coil on each leg of the core. The inside half of one coil is connected to the outside half of the other coil and vice versa, providing equal current in each half of the reactor winding. This interlacing of the two coils reduces the interwinding leakage reactance to a very low value. The reactor is completely isolated from ground by stand-off insulators since the reactor coil is at line voltage above ground. The reactor core, core clamps, and other associated parts approach this level.

The current transformer is a toroid, through which the load current passes. It furnishes a current proportional to load current to the line-drop compensator circuit in the control and to optional metering packages.

The tap changer enables the regulator to provide regula:ion in smooth, accurately proportioned steps at a controlled speed that minimizes arcing and extends contact life. Four different tap changers are used throughout the line of regulator ratings. Figures 1-13 through 1-16 illustrate typical internal wiring schemes of the various types of regulator constructions. Most of the wiring is on the tap changer itself. Application, troubleshooting, and operation of the spring- and direct-drive tap changers and related components are covered extensively in *Service Manual S225-10-2.*

The terminal board inside the junction box on the cover connects the internal tank wiring to the position indicator and control. The junction box wiring is shown in Figure 4-1, page 4-2.

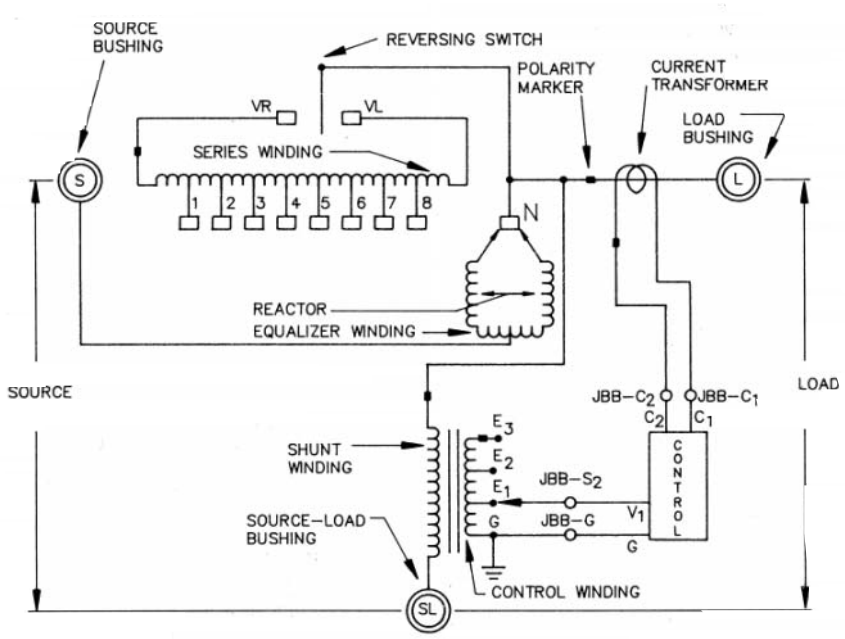

Figure 1-9.
Power circuit - series winding located on the source-side.
(ANSI Type B)

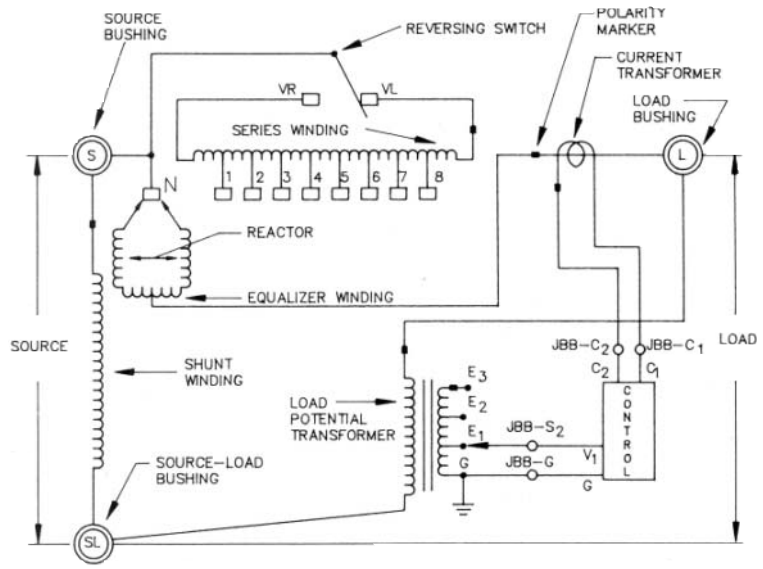

Figure 1-10.
Power circuit-series winding located on the load-side.
(ANSI Type A)

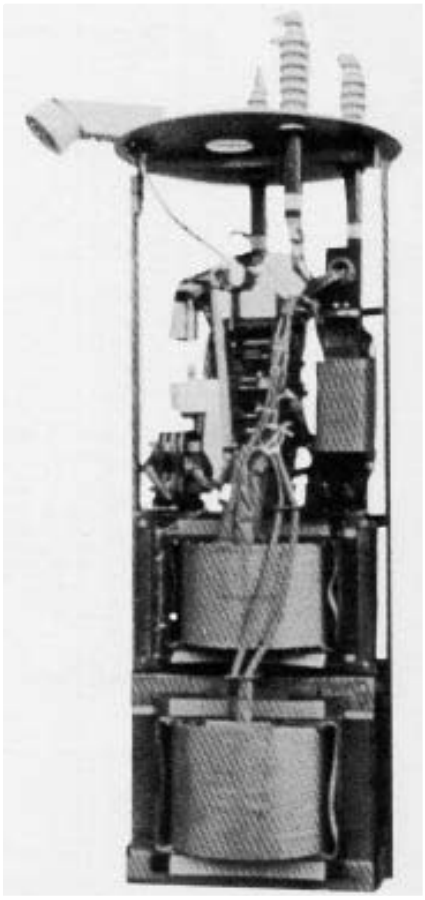

Figure 1-12.
Series transformer design.

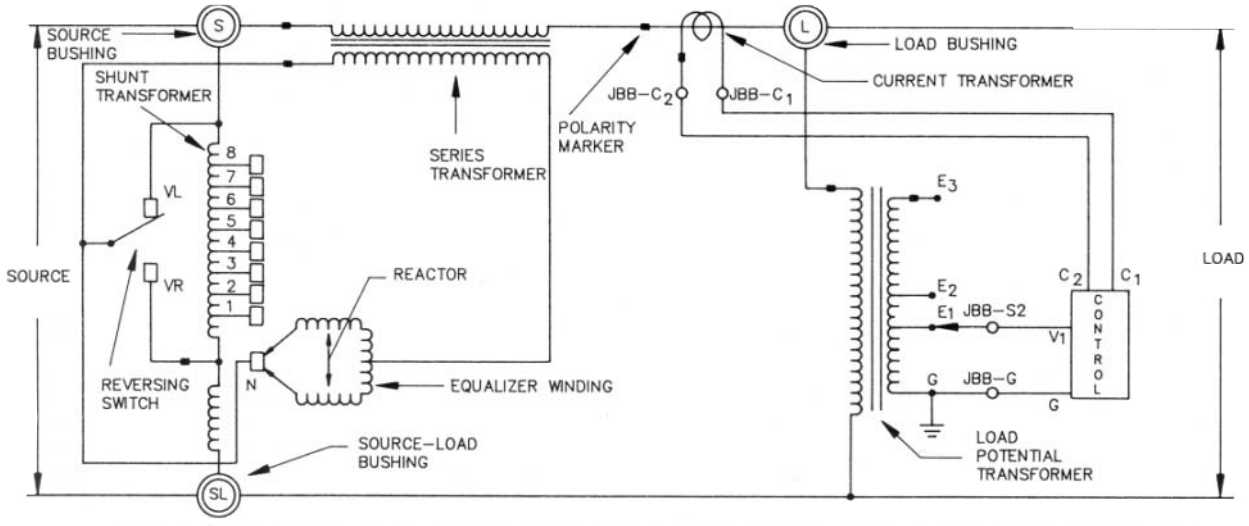

Figure 1-11.
Power circuit-series transformer.

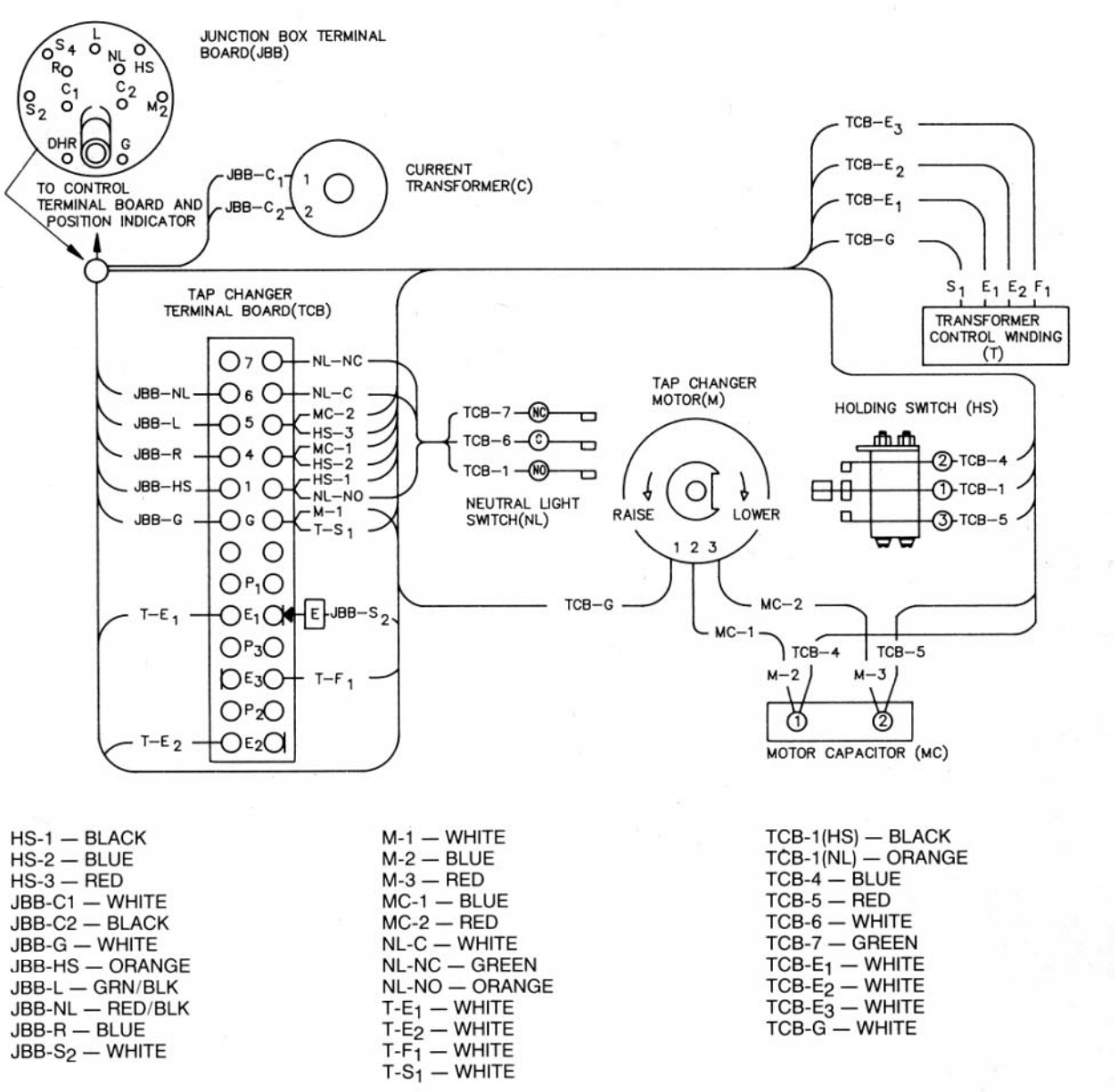

Figure 1-13.
Internal wiring of spring-drive regulator with series winding located on the source side.

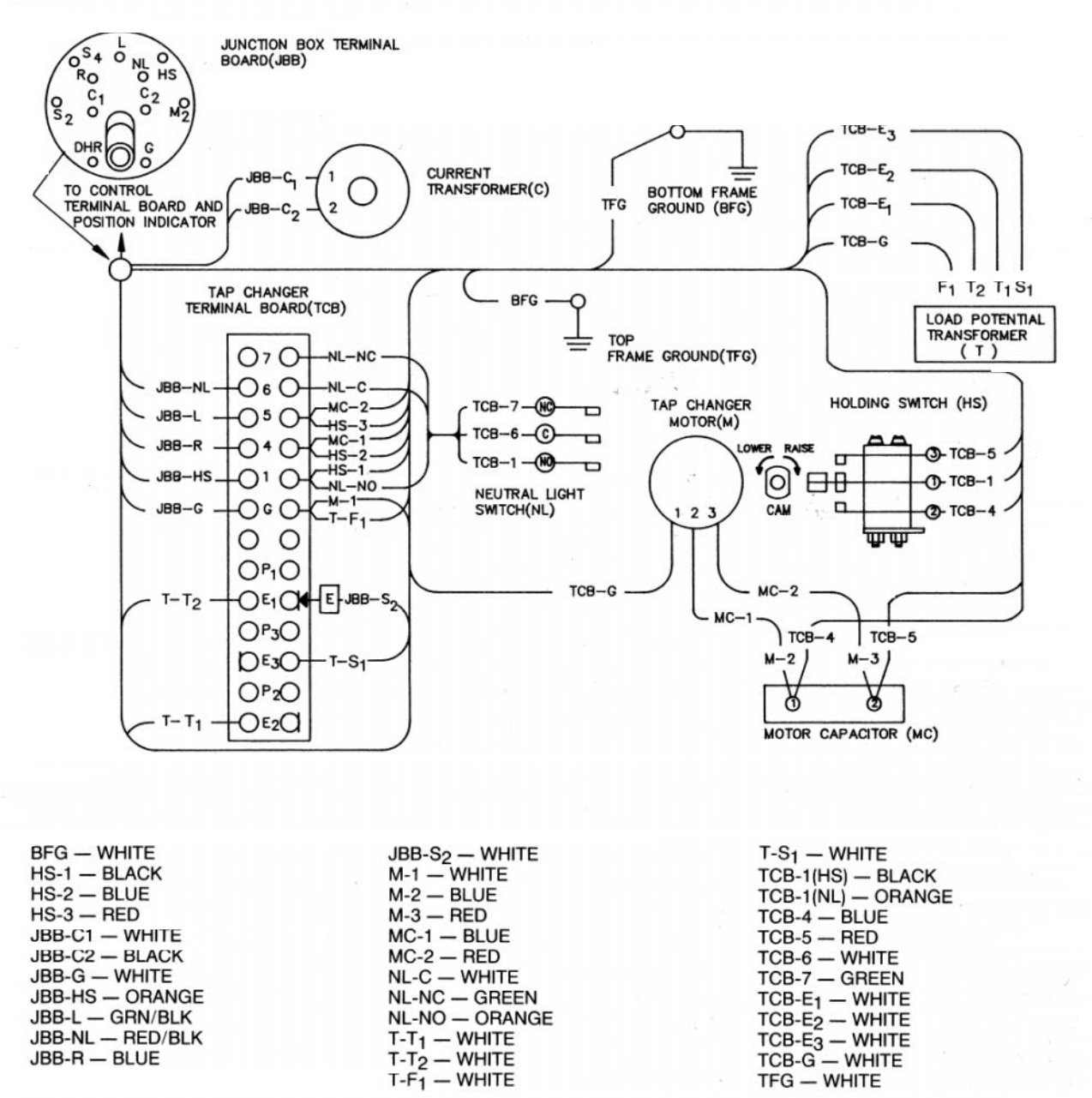

BFG — WHITE
HS-1 — BLACK
HS-2 — BLUE
HS-3 — RED
JBB-C1 — WHITE
JBB-C2 — BLACK
JBB-G — WHITE
JBB-HS — ORANGE
JBB-L — GRN/BLK
JBB-NL — RED/BLK
JBB-R — BLUE

JBB-S_2 — WHITE
M-1 — WHITE
M-2 — BLUE
M-3 — RED
MC-1 — BLUE
MC-2 — RED
NL-C — WHITE
NL-NC — GREEN
NL-NO — ORANGE
T-T_1 — WHITE
T-T_2 — WHITE
T-F_1 — WHITE

T-S_1 — WHITE
TCB-1(HS) — BLACK
TCB-1(NL) — ORANGE
TCB-4 — BLUE
TCB-5 — RED
TCB-6 — WHITE
TCB-7 — GREEN
TCB-E_1 — WHITE
TCB-E_2 — WHITE
TCB-E_3 — WHITE
TCB-G — WHITE
TFG — WHITE

Figure 1-14.
Internal wiring of direct-drive regulator with series winding located on the load side.

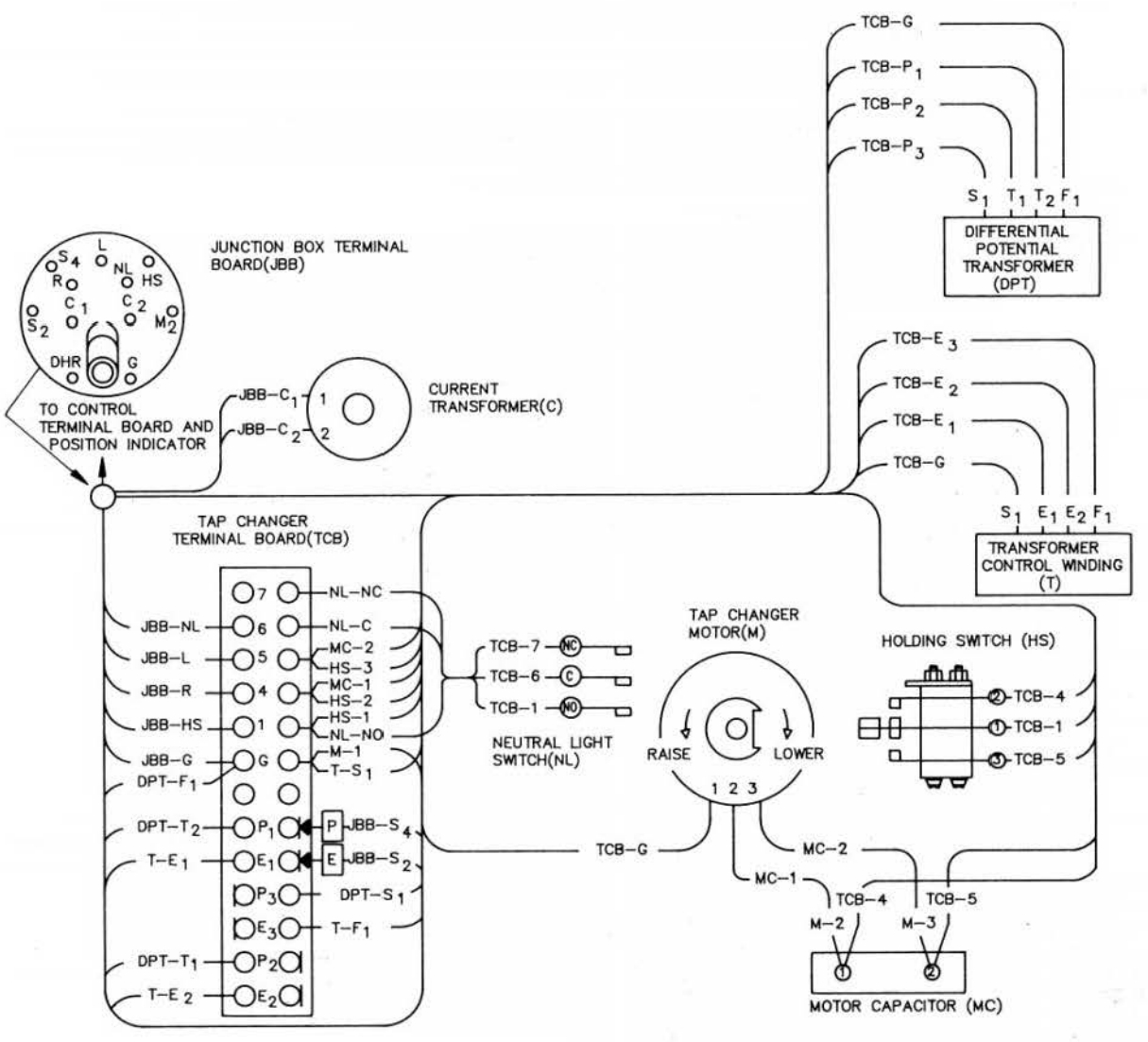

DPT-F_1 — WHITE
DPT-S_1 — WHITE
DPT-T_1 — WHITE
DPT-T_2 — WHITE
HS-1 — BLACK
HS-2 — BLUE
HS-3 — RED
JBB-C1 — WHITE
JBB-C2 — BLACK
JBB-DHR — ORG/BLK
JBB-G — WHITE
JBB-HS — ORANGE
JBB-L — GRN/BLK
JBB-NL — RED/BLK
JBB-R — BLUE
JBB-S_2 — WHITE
JBB-S_4 — WHITE
M-1 — WHITE
M-2 — BLUE
M-3 — RED
MC-1 — BLUE
MC-2 — RED
NL-C — WHITE
NL-NC — GREEN
NL-NO — ORANGE
T-F_1 — WHITE
T-T_1 — WHITE
T-T_2 — WHITE
T-S_1 — WHITE
TCB-1(HS) — BLACK
TCB-1(NL) — ORANGE
TCB-4 — BLUE
TCB-5 — RED
TCB-6 — WHITE
TCB-7 — GREEN
TCB-E_1 — WHITE
TCB-E_2 — WHITE
TCB-E_3 — WHITE
TCB-G — WHITE
TCB-P_1 — WHITE
TCB-P_2 — WHITE
TCB-P_3 — WHITE

Figure 1-15.
Internal wiring of regulator with series winding on input side, with differential potential transfomrer.

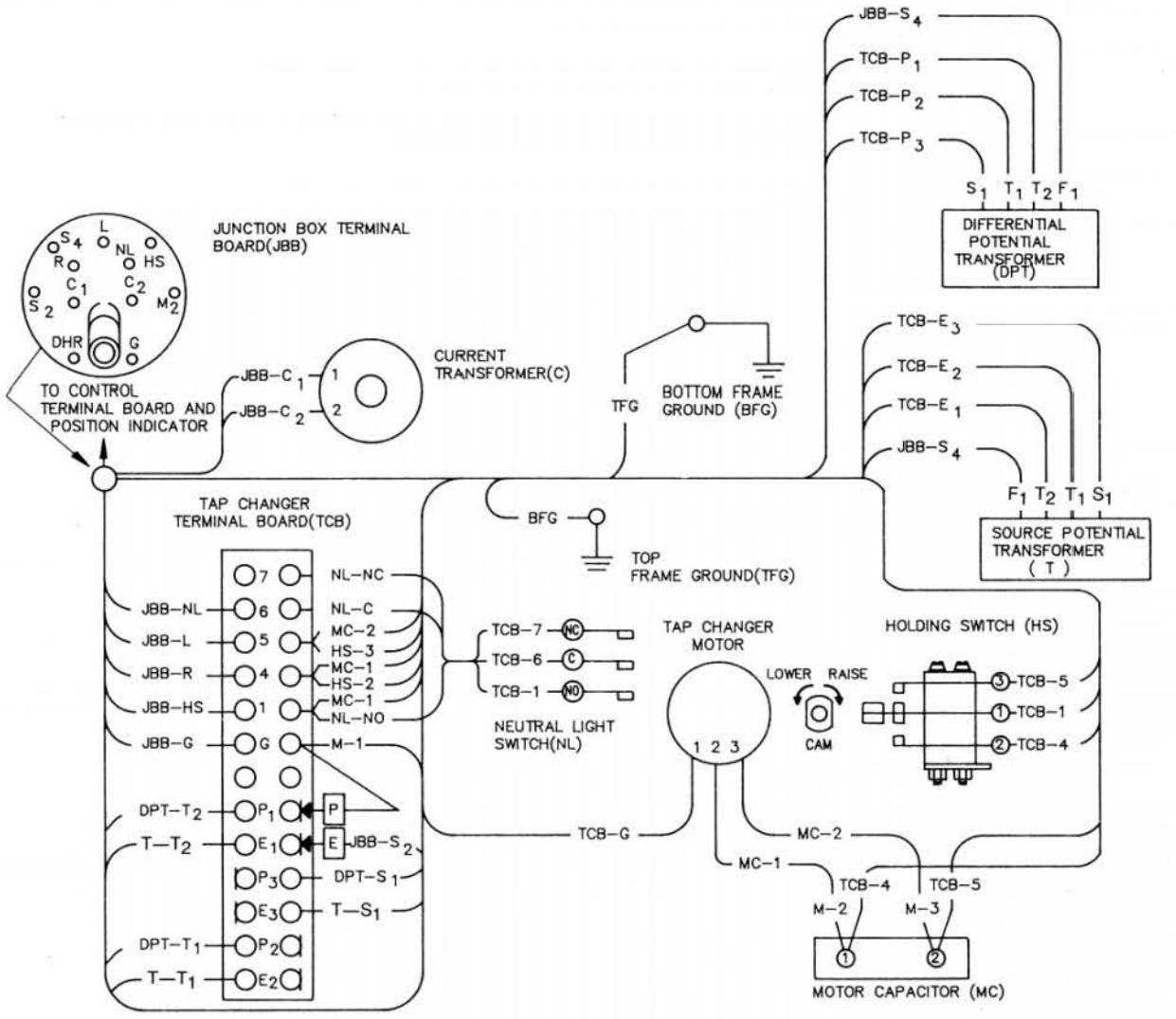

DPT-F_1 — WHITE
DPT-S_1 — WHITE
DPT-T_1 — WHITE
DPT-T_2 — WHITE
HS-1 — BLACK
HS-2 — BLUE
HS-3 — RED
JBB-C1 — WHITE
JBB-C2 — BLACK
JBB-DHR — ORG/BLK
JBB-G — WHITE
JBB-HS — ORANGE
JBB-L — GRN/BLK
JBB-NL — RED/BLK

JBB-R — BLUE
JBB-S_2 — WHITE
JBB-S_4 — WHITE
M-1 — WHITE
M-2 — BLUE
M-3 — RED
MC-1 — BLUE
MC-2 — RED
NL-C — WHITE
NL-NC — GREEN
NL-NO — ORANGE
T-F_1 — WHITE
T-T_1 — WHITE
T-T_2 — WHITE

T-S_1 — WHITE
TCB-1(HS) — BLACK
TCB-1(NL) — ORANGE
TCB-4 — BLUE
TCB-5 — RED
TCB-6 — WHITE
TCB-7 — GREEN
TCB-E_1 — WHITE
TCB-E_2 — WHITE
TCB-E_3 — WHITE
TCB-G — WHITE
TCB-P_1 — WHITE
TCB-P_2 — WHITE
TCB-P_3 — WHITE

Figure 1-16.
Internal wiring of regulator with load winding on output side, with differential potential transformer.

VR-32 Regulator and CL-2A Control

JBB-G — WHITE
JBB-HS — ORANGE
RLS-1 — BLUE
LLS-1 — GREEN/BLACK
JBB-NL — RED/BLACK
JBB-DHR — ORANGE/BLACK
JBB-S_2 — BLACK
JBB-C_2 — GREEN
JBB-C_1 — RED
TB_2-HS — ORANGE
TB_8-1 — BLUE
TB_2-R_3 — BLUE
TB_2-L_3 — WHITE/GREEN
TB_8-3 — WHITE/GREEN
TB_2-NL — WHITE/RED
TB_2-DHR — WHITE/ORANGE
TB_2-V_S — BLACK
RCT_1-120 — BLACK
SD_1-1 — VIOLET
TB_2-C_3 — GREEN
RCT_2 — WHITE/BROWN
RCT_1 — BLACK
TB_7-V_6 — WHITE/BROWN
TB_7-V_1 — BLACK
PD_1-2 (V_6) — WHITE/BROWN
PD_1-2 (V_1) — BLACK
RCT_2-COM — WHITE
TB_1-C_2 — VIOLET
TB_2-C_1 — RED
RCT_1-COM — WHITE
TB_7-G — WHITE
TB_2-V_M — WHITE/BLACK
TB_1-V_4 — BLACK
PD_1-2 (RCT_2) — WHITE/BROWN
PD_1-2 (RCT_1) — BLACK
TB_8-4 — WHITE
TB_1-R_1 — BLUE
TB_1-L_1 — WHITE/GREEN
TB_2-G — WHITE
TB_2-B_R — WHITE/BLUE
TB_8-5 — WHITE/BLUE
TB_1-V_S — BLACK
RCT_1-127 — WHITE/BLACK
SD_1-2 — RED
TB_1-C_3 — GREEN
TB_1-H_S — ORANGE
TB_1-NL — WHITE/RED
TB_1-DHR — WHITE/ORANGE

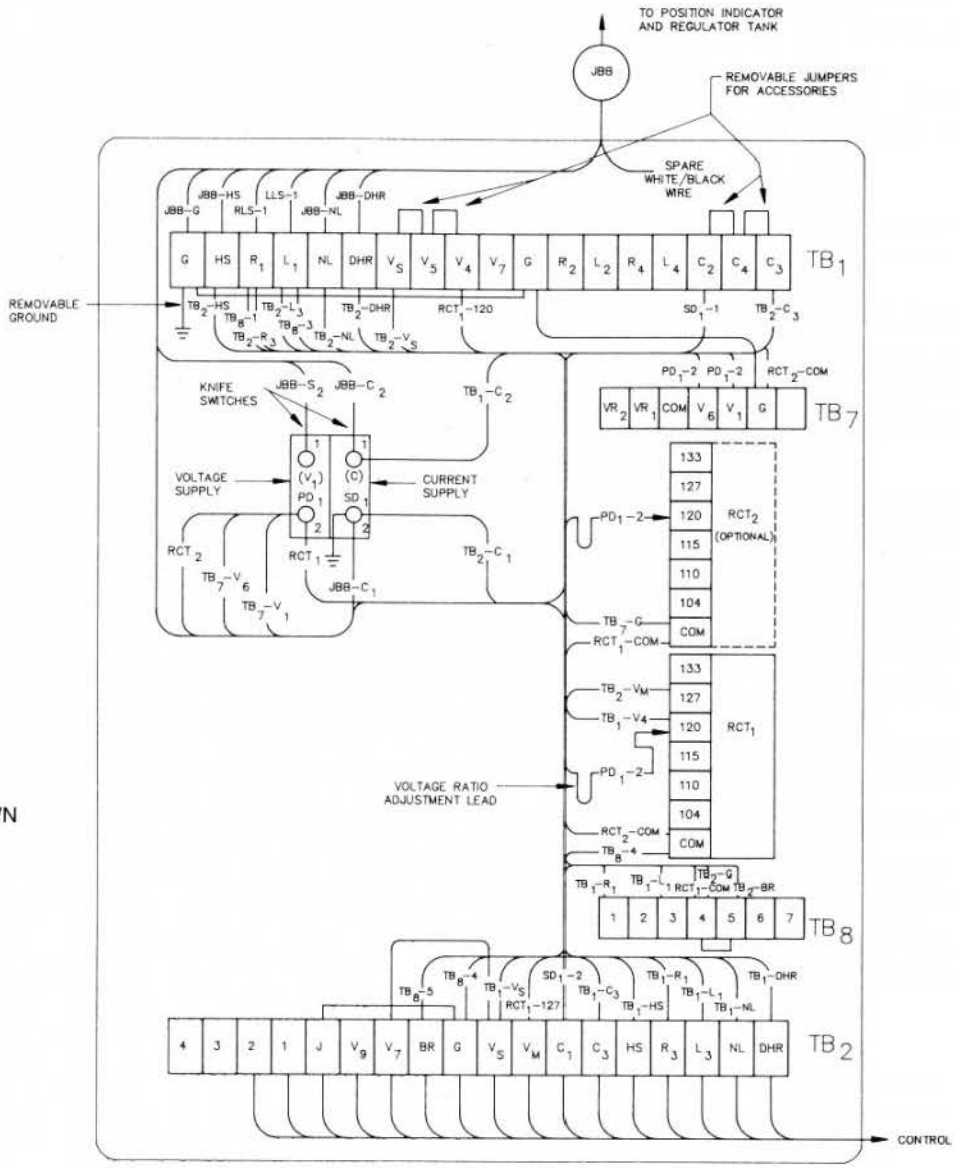

Figure 1-17.
Back panel signal circuit.

NOTES:

VR-32 Regulator and CL-2A Control

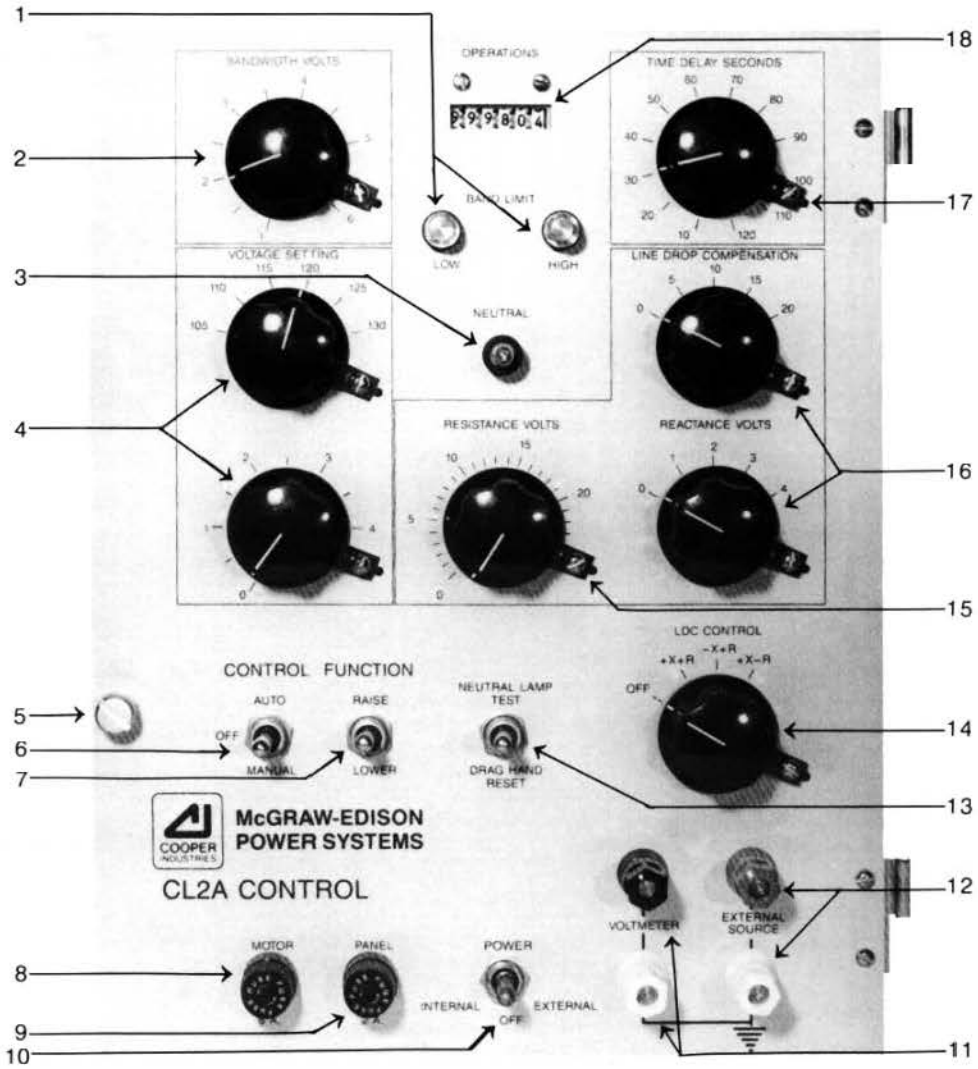

1. Band Edge Indicators
2. Voltage Bandwidth
3. Neutral Indicating Light
4. Voltage Level
5. Panel Locking Screw
6. AUTO/OFF/MANUAL Switch
7. RAISE/LOWER Switch
8. Motor Fuse
9. Panel Fuse
10. INTERNAL/EXTERNAL Power Switch
11. Voltmeter Terminals
12. External Power Terminals
13. Neutral Lamp Test/Drag Hand Reset Switch
14. Line Drop Compensator Control (polarity adjustment)
15. Resistance Volts, Line Drop Compensator
16. Reactance Volts, Line Drop Compensator
17. Time Delay
18. Operations Counter

Figure 2-1.
CL-2A Front Panel.

CL-4C REGULATOR CONTROL • Section 2

INTRODUCTION

The CL-2A Control

The purpose of the CL-2A Control, as any control, is to initiate output actions in response to changing input conditions, as a function of the programmable control characteristics (settings). The regulator control must also perform to the ANSI C57.15 Class I accuracy specificiations overthe -4O^{o}C, +85°C range. It must be sufficiently well protected against damaging transients and surges, it must be reliable, and it must be cost effective. The CL-2A regulator control meets these requirements.

The CL-2A Control is an enhancement of the proven CL-2 control design. This concept utilizes much of the same hardware as the CL-2, but the printed circuit board has been redesigned to incorporate the latest in microprocessor technology. Additional design changes include:

1. The 5-position rotary control switch has been replaced with two toggle switches to help reduce operator error.
2. The test rheostat was removed to improve reliability and reduce the chance of operator error.
3. The drag hand reset and neutral light test functions have been separated and are now implemented via a toggle switch.
4. The neutral light was replaced with a high intensity amber neon cartridge to improve visibility.

These changes are directed at making the CL-2A easier to operate and to further improve upon the reliability that was characteristic of the CL-2.

PRE-INSTALLATION OPERATIONAL CHECK

The CL-2A Control has the facilities for either manual or automatic operation of the tap changer, with either an internal source of power (the regulator) or an external source. To perform an operation check of the control before installing the regulator, follow these steps:

1. Connect the three high-voltage bushings together and ground them.
2. Place the POWER switch in the OFF position and the AUTO/OFF/MANUAL switch in the OFF position.
3. Connect a 120 volt 50/60 hertz source to the EXTERNAL SOURCE terminals. The grounded side of the external source must connect to the ground (white) terminal on the control.
4. Place the POWER switch in the EXTERNAL position.
5. Move the AUTO/OFF/MANUAL switch to MANUAL and depress and hold the RAISE/LOWER momentary toggle switch. Allow the tap changer to operate to 16L, the 10% buck position.
6. Now hold up on the RAISE/LOWER momentary toggle switch. Allow the tap changer to operate to 16R, the 10% boost position.
7. Move the AUTO/OFF/MANUAL switch to AUTO. Turn the coarse VOLTAGE SETTING counterclockwise for a LOWER operation. Permit the tap changer to operate for approximately eight to ten steps. Check to ensure that the operation counter is registering tap changes.
8. Turn the coarse VOLTAGE SETTING clockwise for a RAISE operation. Permit the tap changer to operate for approximately eight to ten steps, checking the operation counter to ensure it is registering tap changes.
9. Return the tap changer to neutral. When on neutral, the NEUTRAL LAMP will light and the POSITION INDICATOR will point to zero.
10. Place the AUTO/OFF/MANUAL switch in the OFF position.
11. Press down on the momentary toggle switch labeled DRAG HAND RESET. The position indicator drag hands will reset to neutral.
12. Turn the POWER switch to OFF and disconnect the 120 volt source from the EXTERNAL SOURCE terminals.
13. Remove the shorting connection from the high-voltage bushings and disconnect the ground.

IN-SERVICE CALIBRATION CHECK

The calibration of the CL-2A Control can be checked while the regulator is in-service. However, the user must understand that field calibration checks are only an **indication** of calibration, and are not nearly as precise as the procedure described in the Control Trouble Shooting section of this manual, which is a laboratory process.

1. Connect the accurate true-RMS responding voltmeter of at least 3000 ohms impedance to the VOLTMETER terminals.
2. If line drop compensation is being used, turn the LDC control to the OFF position.
3. Manually operate the regulator three or four steps above the set point (voltage level setting), and then place the AUTO/OFF/MANUAL switch on AUTO. After the time delay period, the regulator should step down to within the top band edge. (Example: 120 V and 2 V BW = 121 V top band edge.)
4. Manually operate the regulator three or four steps below the set point (voltage level setting), and then place the AUTO/OFF/ MANUAL switch on AUTO. After the time delay period, the regulator should step up to within the lower band edge. (Example: 120 V and 2 V BW = 119 V lower band edge.)
5. The average of these two voltage readings is approximately the set point of the control.
6. Return the control knobs and switches to their previous positions.

SPECIFICATIONS	
A. Physical size	10-3/8"W, 13"H, 6"D
B. Weight	9-3/4 Ibs.
C. Burden at 120 volt	6VA
D. Operating temperature range	-40°C to +85° C
E. Control Svstem Accuracy	ANSI C57.15 Class I

SETTING THE CL-2A CONTROL FOR SERVICE

This section describes the user selectable control settings and aides in determining the correct values for the application. There are a total of seven control settings to be determined:

1. Voltage setting, continuously variable from 105 to 135 volts.
2. Bandwidth setting, variable from 1 volt to 6 volts in 0.5 volt increments.
3. Time delay setting, variable from 10 seconds to 120 seconds in 10 second increments, or by using the time doubling feature, from 20 seconds to 240 seconds in 20 second increments.
4. Line drop compensation for resistance, continuously variable from 0 to 24 volts.
5. Line drop compensation for reactance, continuously variable from 0 to 24 volts in 1 volt increments.
6. Line drop compensation control switch for establishing the polarity (±) for each of the R & X line drop compensation elements.
7. Control operating mode, selectable between sequential mode, time integrating, or voltage averaging. This feature is implemented via a dip switch, located on the printed circuit board.

Voltage Setting

All Cooper Power Systems VR-32 regulators have provisions for operation at system voltages lower than the nameplate rating. The correct voltage setting for the application is dependent upon the regulator rating and the system voltage on which it is installed. The regulator nameplate always indicates the voltage setting for the given application that produces an output regulated to the 120 volt base voltage. (This is explained in detail in the Control operation section of the manual, page 2-4.) The user simply sets the voltage setting for the value indicated on the nameplate, unless it is desired to operate at a higher or lower voltage level than nominal.

Bandwidth

The bandwidth is defined as the total voltage range around the voltage setting which the control will consider as a satisfied condition. As an example, a 2V bandwidth on a 120 volt setting means the operational timer will not activate until the voltage is below 119V or above 121 V. When the voltage is in-band, the band edge lights are off and the timer (time delay) is off, so no relay closure can occur. Selection of a small bandwidth will cause more tap changes to occur, but will provide a more “tightly” regulated line. Conversely, a larger bandwidth results in fewer tap changes, but at the expense of better regulation. Selection of the bandwidth and time delay settings should be made recognizing the interdependence of these two parameters.

Time Delay

The time delay is the period of time (in seconds) that the control waits from when the voltage first goes out-of-band to when the relay closure occurs. If a rapid response is required, a smaller setting should be used. If several devices on the same line are to be coordinated, longer time delay settings may be required to allow the proper devices to operate in the desired sequence.

On the front panel of the CL-2A regulator control, the time delay values are prominently marked through 120 seconds. A feature of this control, called time doubling, permits time delay sequences up to 240 seconds to occur. This feature simply doubles the actual setting shown by the switch on the panel. It is implemented by setting position 4 on the dip switch, located on the printed circuit board (Figure 2-2).

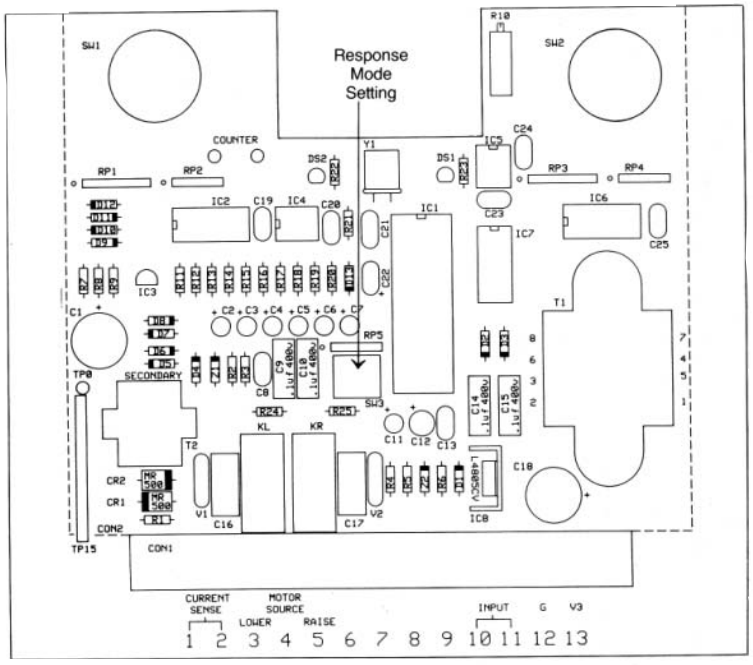

Figure 2-2.
Printed Circuit board.

Line Drop Compensation, Resistance and Reactance Settings

Quite often regulators are installed some distance from the theoretical load center or the location at which the voltage is attempted to be regulated. This means the load will not be served at the desired voltage level due to the losses (voltage drop) on the line between the regulator and the load. Furthermore, as the load increases, line losses also increase causing the lowest voltage condition to occur during the time of heaviest loading. This is the least desirable time for this to occur.

To provide the regulator with the capability to regulate at a "projected" load center, line drop compensation elements are incorporated on the control. This circuitry consists of a current source (C.T.), which is proportional to the load current, and resistive (R) and reactive (X) elements through which this current flows. As the load current increases, the resulting C.T. current flowing through these elements produces voltage drops which simulate the voltage drops on the primary line. This causes the "sensed" voltage to be correspondingly altered, therefore, the control responds by operating based upon this pseudo load center voltage.

To select the proper R and X values, the user must know several factors about the line being regulated. Cooper Power Systems has prepared reference document R225-10-1 to assist in this determination. Once the proper values are determined, they can be set by simply setting the front panel R & X control knobs accordingly.

Line Drop Compensation Control Switch

When line drop compensation is used, the correct polarity of the resistance and reactance elements is necessary for proper regulation. On four-wire wye connected systems, the polarity selector is always set for +X and +R values. On delta connected systems, however, the line current is 30° displaced from the line-to-line voltage (assuming 100% power factor). As a result of this displacement, the polarity of the appropriate R or X element must be reversed. The setting of the selector switch may be on +X+R, -X+R or +X-R settings. The correct polarity determination is explained in detail in supplement R225-10-1. Note also that the line drop compensation control switch has an off position to bypass the compensator circuit entirely. This is convenientfor test purposes so that the user does not need to disturb the preset R and X values.

CONTROL OPERATION MODES

A selection of three modes in which the control responds to out-of-band conditions is provided. This permits the user to select the mode that best fits the application. These modes are sequential, time integrating, and voltage averaging.

SEQUENTIAL

This is the standard mode of response as shipped from the factory. When the load voltage goes out-of-band, the time delay circuit is activated. At the end of the time-out, a tap change is initiated. After each tap change a two-second pause occurs to permit the control to sample the voltage again. This sequence continues until the voltage is brought into band, at which time the timing circuit is reset. Any time the voltage goes in-band, the timer is reset.

TIME INTEGRATING

This mode is activated by turning on (sliding upward) dip switch position #2, as shown in Figure 2-2. When the load voltage goes out-of-band, the time delay circuit is activated. At the end of the time out, a tap change is initiated. After each tap change, a two-second pause occurs to permit the control to sample the voltage again. If the voltage is still out-of-band, another tap change is performed. This sequence continues until the voltage is brought into band. When the voltage goes in-band, the timer is decremented at a rate of 1.1 until it reaches zero.

VOLTAGE AVERAGING

This mode is activated by turning on (sliding upward) dip switch position #1, as shown in Figure 2-2. When the load voltage goes out-of-band, the time delay circuit is activated. During this time delay period, the microprocessor monitors and averages the instantaneous load voltage. It then computes the number of tap changes required to bring the average voltage back to the set voltage level. When the time delay period is complete, the computed number of tap changes are performed without any delay between them. A maximum of five consecutive tap changes will be allowed before the time delay circuit is reset to avoid an accumulative error. The timer is not reset on voltage excursions in-band, unless the voltage stays in-band for at least 10 seconds. An error-averaging characteristic is inherent with the voltage averaging mode.

To permit sufficient time for the microprocessor to average the voltage, the time delay period must be 30 seconds or longer. If the time delay is set for less than 30 seconds, the control reverts to the sequential mode of operation.

If the time integrating and voltage averaging dip switch settings are both in the ON position, the control will revert to the sequential response mode.

CL-2A CONTROL OPERATION

This section describes the CL-2A regulator control design and operation. The overall system schematic is shown in Figure 2-3. This is described in segments to aid in the understanding of the VR-32 regulator with the CL-2A Control.

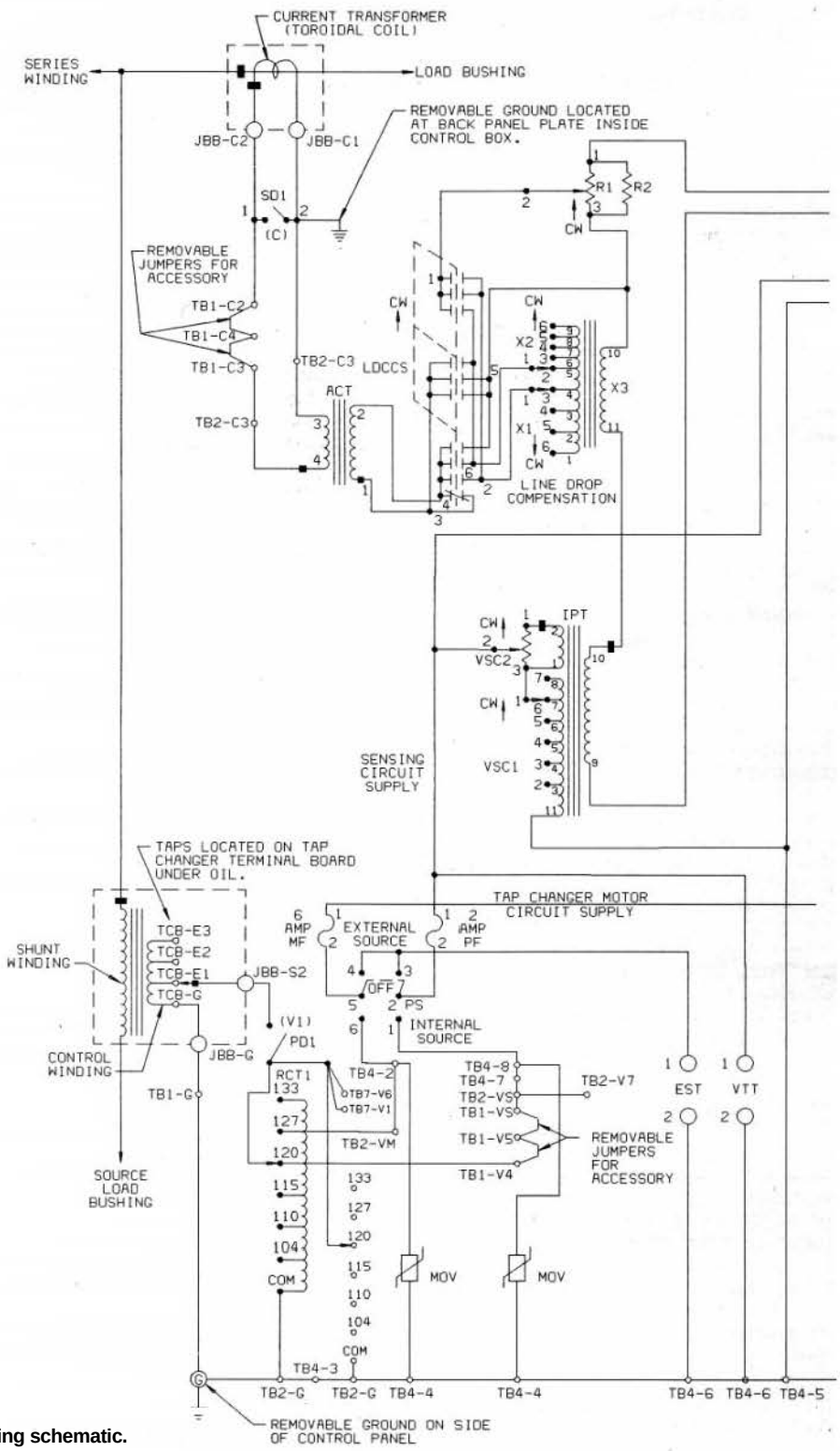

Figure 2-3.
VR-32 Regulator and CL-2A Control wiring schematic.

S225-10-5

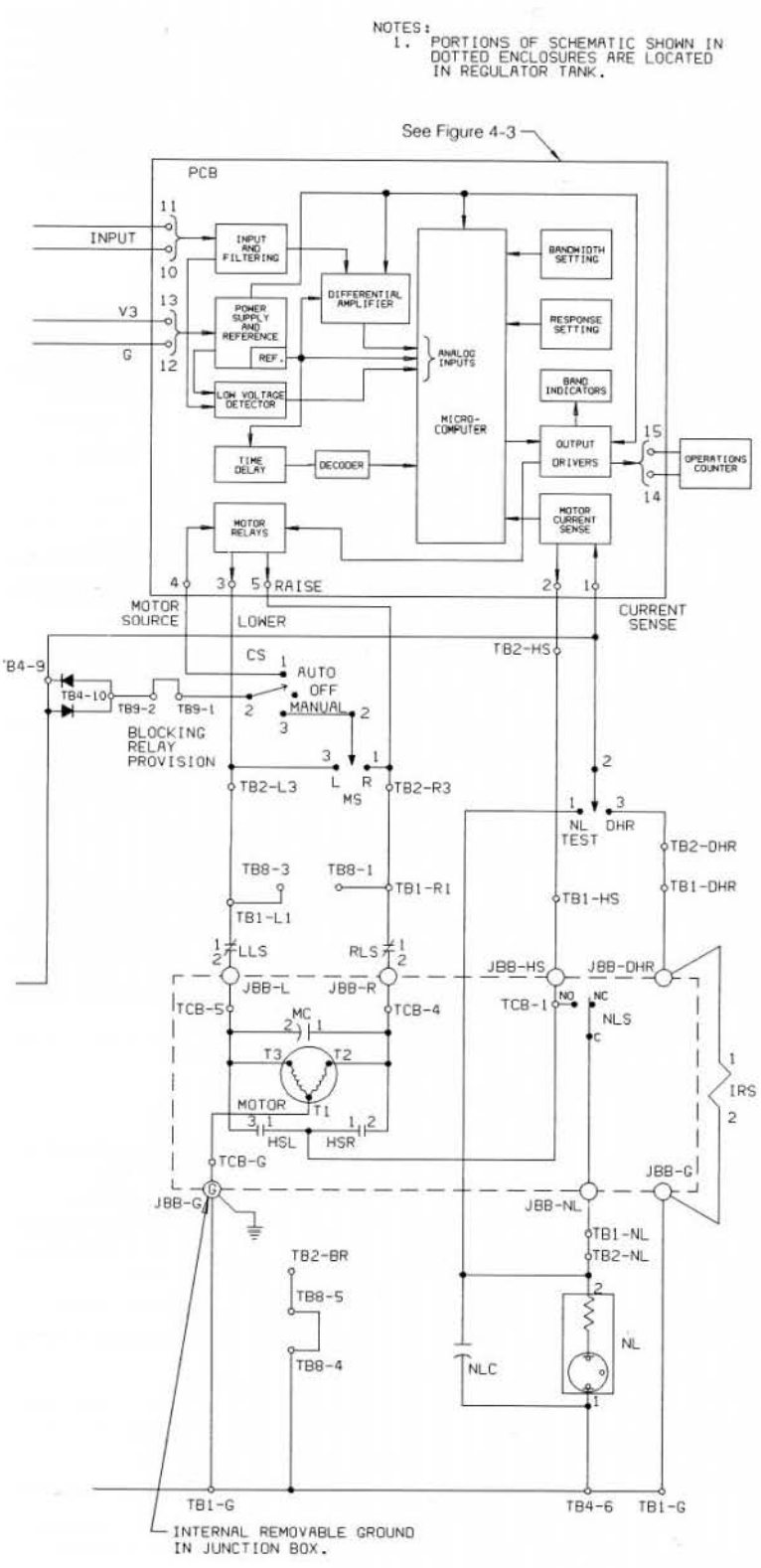

ACT	— AUXILIARY CURRENT TRANSFORMER
CS	— CONTROL SWITCH
DHR	— DRAG HAND RESET
EST	— EXTERNAL SOURCE TERMINALS
HSL	— HOLDING SWITCH LOWER
HSR	— HOLDING SWITCH RAISE
IPT	— INPUT POTENTIAL TRANSFORMER
IRS	— INDICATOR RESET SOLENOID (POSITION INDICATOR)
JBB	— JUNCTION BOX TERMINAL BOARD ON THE COVER
LDCCS	— LINE DROP COMPENSATION CONTROL SWITCH
LLS	— LOWER LIMIT SWITCH (POSITION INDICATOR)
MC	— MOTOR CAPACITOR
MF	— MOTOR FUSE
MOV	— METAL OXIDE VARISTOR FOR SURGE PROTECTION
NL	— NEUTRAL LIGHT
NLC	— NEUTRAL LIGHT CAPACITOR
NLS	— NEUTRAL LIGHT SWITCH
PCB	— PRINTED CIRCUIT BOARD
PD	— POTENTIAL OPENING DEVICE
PF	— PANEL FUSE
PS	— POWER SWITCH
R1	— LINE DROP COMPENSATING RESISTANCE SETTING
R2	— TRIM RESISTOR
RCT	— RATIO CORRECTION TRANSFORMER
RLS	— RAISE LIMIT SWITCH (POSITION INDICATOR)
SD	— CURRENT SHORTING DEVICE
TB	— CONTROL TERMINAL BOARD
TCB	— TAP CHANGER TERMINAL BOARD
VM	— MOTOR VOLTAGE
VS	— SENSING VOLTAGE
VSC1	— COARSE VOLTAGE SETTING CONTROL
VSC2	— FINE VOLTAGE SETTING CONTROL
VTT	— VOLTAGE TEST TERMINALS
X1	— LINE DROP COMPENSATING REACTANCE COARSE SETTING
X2	— LINE DROP COMPENSATING REACTANCE FINE SETTING
X3	— LINE DROP COMPENSATION REACTOR

VR-32 Regulator and CL-2A Control

Development of Potentials (Voltage Circuits)
All Cooper Power Systems VR-32 regulators have provisions for operation at system voltages lower than the nameplate rating, as illustrated by Table 2-1. This is accomplished by providing a voltage sensing potential winding with taps which roughly correspond to the appropriate system voltage. This source may be either a winding on the main core/coil assembly, or a separate potential transformer located on the output (load) side of the regulator. The taps from this source are brought to a terminal board located on top of the tap changer assembly, under oil (see Figure 2-4). The connections are made with push-on terminals and are easily accessed through the handhole.

The tapped potential winding cannot always provide adjustment of the voltage fine enough for control purposes. A tapped autotransformer is therefore used for fine voltage adjustment. This transformer is referred to as the Ratio Correcting Transformer (RCT) and has taps at 104, 110, 115, 120, 127, and 133 volts. It is located on the back panel in the control enclosure (see Figure 2-5). To operate a regulator on a system other than its rating, the appropriate selection must be made for the internal tap, RCT tap, and control voltage setting. The nameplate always provides all these values for the common system voltages which are applicable for the rating (see Figure 2-6).

To calculate the appropriate voltage setting for system voltages other than that shown, the following formula can be used (along with Table 2-1)

$$\frac{\text{System Voltage}}{\text{Internal PT Ratio}} \times \frac{120}{\text{RCT Tap Voltage}} = \text{Control Voltage Setting}$$

As an example, consider a 13800V regulator installed on a 12470V system. The calculation is:

$$\frac{12470}{115\ \text{(From Table 2-1)}} \times \frac{120}{104\ \text{(From Table 2-1)}} = 125\ \text{Control Voltage Setting}$$

Utilize this setting provides regulation at 12470 volts, nominal system voltage.

Table 2-1
VR-32 Tap Connections and Voltage Levels.

Regulator Voltage Rating 1	Nominal Single Phase Voltage 2	Ratio Adjusting Data			Test Terminal Voltage ** 6	Overall Potential Ratio ** 7
		Internal Tap. 3	PT Ratio 4	RCT Tap 5		
2500	2500	–	20:1	120	125	20:1
	2400	–		120	120	20:1
5000	5000	E1/P1	40:1	120	125	40:1
	4800	E1/P1		120	120	40:1
	4160	E1/P1		104	120	34.7:1
	2400	E2/P2	20:1	120	120	20:1
	7970	E1/P1	60:1	133	120	66.5:1
7620	7620	E1/P1		127	120	63.5:1
	7200	E1/P1		120	120	60:1
	4800	E2/P2	40:1	120	120	40:1
	4160	E2/P2		104	120	34.7:1
	2400	E3/P3	20:1	120	120	20:1
13800	13800	E1/P1	115:1	120	120	115:1
	13200	E1/P1		115	120	110.2:1
	12000	E1/P1		104	120	99.7:1
	7970	E2/P2	57.5:1	133	125	63.7:1
	7620	E2/P2		133	120	63.7:1
	7200	E2/P2		120	125	57.5:1
	6930	E2/P2		120	120.5	57.5:1
14400	14400	E1/P1	120:1	120	120	120:1
	13800	E1/P1		115	120	115:1
	13200	E1/P1		110	120	110:1
	12000	E1/P1		104	115	104:1
	7970	E2/P2	60:1	133	120	66.5:1
	7620	E2/P2		127	120	63.5:1
	7200	E2/P2		120	120	60:1
	6930	E2/P2		115	120.5	57.5:1
19920	19920	–	166:1	120	120	166:1
	17200	–	166:1	104	120	143.9:1

* P taps are used with E taps only on regulators where an internal potential transformer is used in conjunction with the control winding to provide voltage supplies to the control. See nameplate for verification of this type of control supply.

* Test Terminal voltage and overall potential ratio may vary slightly from one regulator to another. See the regulator nameplate for determining the exact valueS.

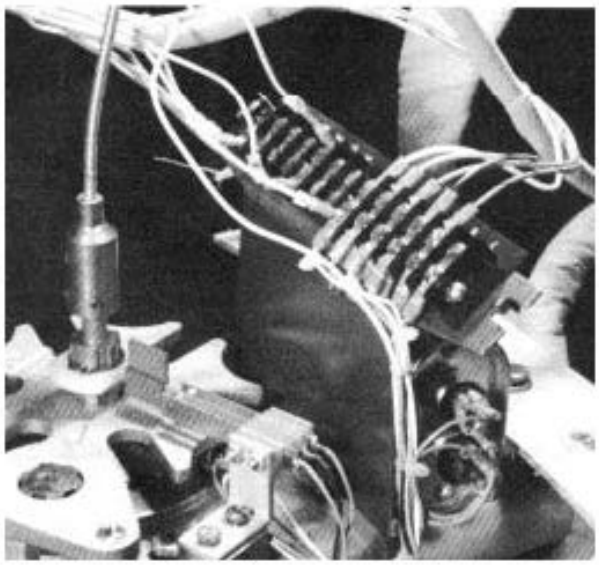

Figure 2-4.
Internal tap terminals.

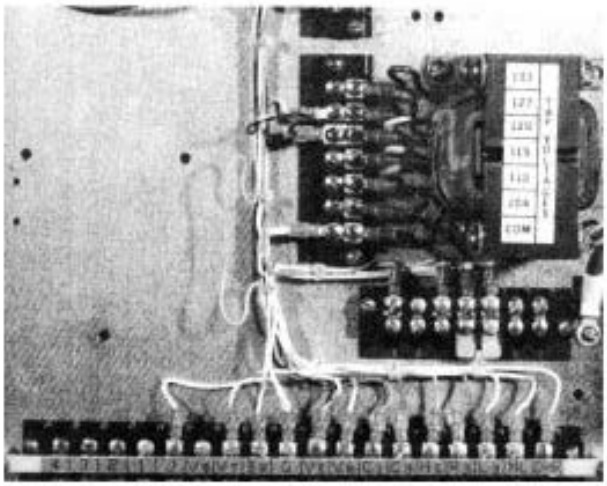

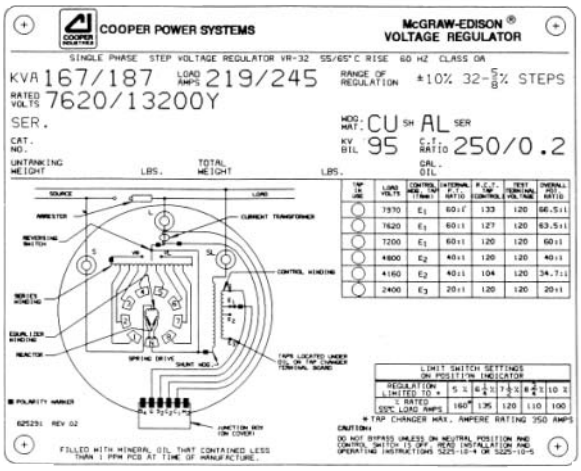

Figure 2-6.
Nameplate.

The voltage developed by the sensing winding is brought from the tap changer terminal board to the junction box terminal board, through the control cable, into the enclosure, and terminates at the knife switch labeled V_1. Opening this knife switch provides a visible means of removing all power to the control and back panel, thus allowing the operator to work safely on the control circuitry while the regulator is energized. From the knife switch, the voltage is ratio corrected by the RCT as previously described. Note, also, that a separation of sensing and motor circuits occurs at this transformer. The motor circuit is routed directly to the control front panel, whereas the sensing potential is brought back to the top terminal strip, through a series of removable jumpers, and then to the front panel. These jumpers permit the easy addition of accessories which compliment the control (voltage limiter, voltage reduction, metering).

Both of the voltage sources are protected against surges on the control front panel, through the use of metal oxide varistors. These potentials are then connected directly to the power switch. Note that the power switch has three positions: INTERNAL/OFF/ EXTERNAL. The INTERNAL position powers the control from the regulator sensing winding, and the EXTERNAL position permits an external 120V supply be used to operate the the regulator and control. When the power switch is in the EXTERNAL position, the internal supply is disconnected to prevent accidentally energizing the high voltage winding and bushings. The external source terminals are prominently located adjacent to the voltmeter test terminals. The voltmeter terminals allow the monitoring of the voltage that is applied to the sensing input transformer.

The two voltage circuits are routed from the power switch to the respective 6 amp motor fuse and 2 amp panel fuses. From the fuse, the motor potential provides power to the auto/manual selector switch, the drag hand reset solenoid, the neutral light, and the holding switch (alternate motor source) circuits. The sensing supply provides power to the printed circuit board. This function is described further in the following section.

Line Drop Compensator (Current Circuit)

All VR-32 regulators are designed with an internal current transformer for the line drop compensator and optional metering devices. Table 2-2 provides the application information for the various C.T.'s used on the Cooper Power regulators. These C.T.'s provide 200 mA rated secondary output for the full load C.T. primary current.

The current developed by the C.T. is brought to the junction box terminal board, through the control cable into the enclosure, and terminates at the knife switch labeled C. Closing the knife switch provides a visible means of shorting the C.T., thus allowing the operator to work safely on the current circuitry. (For additional safety measures, the V_1 knife switch should also be opened.) At this knife switch, one side of the C.T. is connected to the equipment ground, and is also routed to the front panel for connection to the auxiliary current transformer (ACT). The "high" side of the current circuit is brought to the top terminal strip, through a series of removable jumpers, and then to the front panel for connection to the ACT. These jumpers, permit the easy addition of accessories which compliment the control (Meter Pac).

The auxiliary current transformer provides isolation and current transformation from the 200 mA base to 50 mA for the line drop compensation elements. The output from this transformer passes first to the line drop compensator (LDC) control switch before flowing to the resistance and reactance components. The LDC switch provides the ability to bypass the LDC circuit entirely (off position), and change the current direction through either the resistance element (R) or the reactance element (X). This is illustrated by the switch senings +X+R, -X+R, +X-R.

As current flows through the regulator on the primary circuit, a proportional current (on the 200 mA base) is developed in the C.T. secondary. This provides a current flow through the resistive and reactive elements which produces voltage drops (both R & X) with polarities as determined by the LDC control switch. This voltage subtracts vectorially from the voltage sensing signal output of the potential transformer. The end result is that the voltage signal input to the circuit board is altered according to the line current-flow and the values of the resistance and reactance. settings. In this manner, the voltage regulator responds to changes in LOAD as well as changes in VOLTAGE.

TABLE 2-2
Current Tansformer Applications.

Regulator Current Ratings	C.T. Primary Current
15	25
50	50
75	75
100	100
150	150
167, 200	200
219 231, 250	250
289 300	300
328, 334, 347, 400	400
418, 438, 463, 500	500
548, 578, 656, 668	600
833, 875, 1000, 1093	1000
1332, 1665	1600

Motor Circuit

The motor circuit power is brought from the 6-ampfuse, through a set of back-to-back diodes (for current division), to the AUTO/OFF/MANUAL selector switch. When this switch is set for automatic operation, motor power is applied to the relays. An appropriate relay closure then applies this power to the tap changer motor, after first passing through the limit switch contacts in the position indicator. When the switch is set for manual operation, the power is transferred to the momentary toggle switch labeled RAISE/LOWER. By actuating this switch in one direction or the other, power is applied through the limit switch contacts, directly to the tap changer motor, completely bypassing the circuit board.

Also included as a part of the motor circuit is an “alternate feed” to the motor called the “holding switch circuit.” Located on the tap changer is a single-pole, double-throw switch, which is driven by a cam operated off of the tap changing mechanism. Motor rotation closes this switch (one direction or the other), and establishes a complete circuit for motor current until the rotation is complete and the cam drops out. During the time the holding switch is closed, motor current is drawn through an input on the circuit board which permits the control to detect that a tap change is in progress. The microprocessor uses this information in its decision making process, as described in the following section.

Two other unassociated circuits which share the 6 amp motor source are the drag hand reset and neutral light circuits. The drag hand reset function is accomplished simply by operating a momentary toggle switch which applies power to the reset solenoid in the position indicator. The neutral light is similarly actuated for test purposes and it is also energized from a neutral light switch (located on the tap changer) when in the neutral tap position.

AUTOMATIC/MANUAL OPERATION

Automatic

In the automatic mode of operation, the power switch will be set on INTERNAL and the AUTO/OFF/MANUAL switch will be placed on AUTO. The regulator is assumed energized from the primary circuit. If the sequential control response is selected (the standard mode), the control response is as follows:

1. As the primary voltage moves to a level which represents an out-of-band condition, the sensing voltage will correspondingly reflect the same results on the 120V base. Assuming the voltage dropped low, a lower than nominal signal will appear at the printed circuit board input, terminals 10 and 11.
2. The signal is rectified and harmonic filtered before passing into a differential amplifier for comparison with a reference signal. The resulting amplifier output is fed into an analog-to digital converter on the microprocessor chip.
3. The microprocessor, recognizing the voltage condition as low and out-of-band, issues an output which lights the “LOW” band edge LED, and starts an internal timer which is equivalent to the time delay setting.
4. During the time out period, the voltage is continually sensed and sampled. Should the voltage momentarily move into band, the timer is reset.
5. At the end of the time delay period, the microprocessor issues an output which causes the “RAISE” relay coil to be energized. An internal 4-second timer is also started.
6. The tap changer motor begins to turn as a result of the relay closure, and a cam on the tap changer closes the “RAISE” holding switch. This now provides an alternate source for the motor current, which passes through the “current sense” inputs on the circuit board, terminals 1 and 2.
7. The microprocessor now recognizes that current is flowing in the holding switch circuit, and performs three actions: (1) an output is issued which partially increments the operations counter, (2) the RAISE relay is deenergized, thus opening its contacts, and (3) the four second timer is reset.
8. As a result of the relay contact opening, the motor current is now carried solely by the holding switch circuit. When the motor rotation is complete, the holding switch opens as a result of the cam action, and the motor stops.
9. The microprocessor recognizes that the tap change is now complete and issues an output action which completes the incrementing of the operations counter. A two second pause then occurs, allowing the sensing voltage to stabilize from the motor operation. At the end of this pause, the voltage is monitored.
10. If out-of-band conditions still exists, another output is issued to close the RAISE relay, thus starting another tap change sequence (step 5). If the voltage is in-band, the LOW LED is turned off, and the time delay timer is reset. The microprocessor continues to sample the input voltage for a change of positions.

This sequence is altered slightly if the voltage averaging or time integrating mode of operation is selected. These characteristics are described in Section 3 under Control operating Modes.

The CL-2A regulator control also includes a feature called relay retry. If motor current is not detected within four seconds after the relay closes (step 5), the processor opens the relay contacts, and idles for 30 seconds before trying again. This feature is intended to prevent the control from becoming “locked up” in the unlikely event a good electrical contact is not made when the relay contacts close. The control will also enter this retry mode when the limit switches prevent additional tap changes from occurring or if the AUTO/OFF/MANUAL switch is in a position other than automatic.

Manual

In the manual mode of operation, the power switch can be set on either INTERNAL or EXTERNAL, and the AUTO/OFF/MANUAL switch will be placed on MANUAL. If the EXTERNAL position is chosen, an external source must be applied through the terminals on the front panel.

Operation of the momentary toggle switch RAISE/LOWER applies power through the limit switch contacts, directly to the tap changer motor. The printed circuit board still functions as if it were issuing the commands; however, the motor power is now not connected to the relays, so any relay closure has no effect on the tap changer motor. As the tap changer rotates, the holding switch is closed, as described in the preceding section, step 6. Again, this holding switch current is sensed by the circuit board, and the operations counter is appropriately incremented.

Tap changes will continue to occur as long as the RAISE/LOWER switch is closed and the limit switch is not opened.

SUPERVISORY CONTROL AND DATA AQUISITION (SCADA)

SCADA is a supervisory system used by some utilities for remote control of their system. SCADA may take on many forms: from the single retrieval of a few analog values (such as voltage, current, power factor, etc.) to remote control of the tap change (raise, lower, inhibit), to complete remote control which allows everything to be performed remotely that could be performed at the regulator front panel. Complete remote control can only be accomplished through a digital communications link with the CL-4C Control.

This section applies to regulator SCADA applications that have seen increased use on distribution systems. Cooper Power Systems has prepared a connection scheme to accommodate various functions while at the same time protecting the equipment. This scheme accommodates the following functions:

1. Remotely raise and lower the tap changer
2. Remotely block automatic operation
3. Remotely apply voltage reduction

The basic requirement of the scheme is the use of the current relay package. The purpose of the current relay package is to prevent misapplication of any SCADA system, and to work with the holding switch to make sure a tap change is completed once it is started. The scheme uses a current relay to sense when the holding switch is closed. Once the holding switch is closed, the current relay contacts open and prevent any further power from being applied to the motor except through the holding switch. When the holding switch opens, the current relay contacts close, returning control of the tap changer to one of the operational methods of control: AUTO, MANUAL, or SCADA.

Figure 2-7 shows the basic scheme and the function of the current relay. This general scheme applies to all Cooper Power Systems CL regulator controls, but the wiring changes necessary to achieve the scheme differ with the different controls. The blocking (motor inhibiting) contact, shown in Figure 2-8 inhibits automatic operation of the regulator when the SCADA scheme is in operation.

VOLTAGE REDUCTION

The use of voltage reduction is common with SCADA schemes. Figure 2-9, shows a typical voltage reduction method. The input voltage to the control is applied between V(in) and common. The output voltage V(out) to common is applied to the sensing circuit. If relay K is energized, V(out) is greater than V(in) and when this increased voltage is applied, he sensing circuit causes the control to lower the voltage by the amount of increase. Various levels of voltage reduction may be selected, depending upon the number and value of each tap on the auto-transformer. The total range is usually 0 to 10%.

NOTE: This discussion assumes that the Cooper Power Systems voltage reduction accessory is not being used, and SCADA equipment is being connected directly to the bare CL-2A Control.

Refer to Figure 2-9 for proper connections. This method of voltage reduction is not recommended if a metering device such as the Cooper Power System's Meter-Pac is used.

RETROFITTING A CL-2A CONTROL TO PREVIOUS REGULATOR DESIGNS

Most Cooper Power Systems VR-32 voltage regulators produced since 1957 can be upgraded to work with the CL-2A control. This does not include simplified regulators (SR-32 or Auto-Boosters®). This does include the line material control (1957-1963) in the RS13Y series, the Kyle control (1963-69) in the RS83Y series, the Canonsburg control (1969-77) in the TAB142045 or B843449 series and the CL-1 control (1977-82).

Earlier pole-star types, built in Canonsburg, cannot be retrofitted using these instructions. The following applies to pre-CL-1 design regulators:

A complete CL-2A control **(part code #6070)** must be retrofit to the older regulator. This includes the cabinet, back panel and front panel. The original control cable should be reused where possible to simplify rewiring. If this is impossible, the factory should be contacted for additional instructions. Note that all control accessories can be utilized with the retrofit CL-2A, providing increased versatility of the regulator.

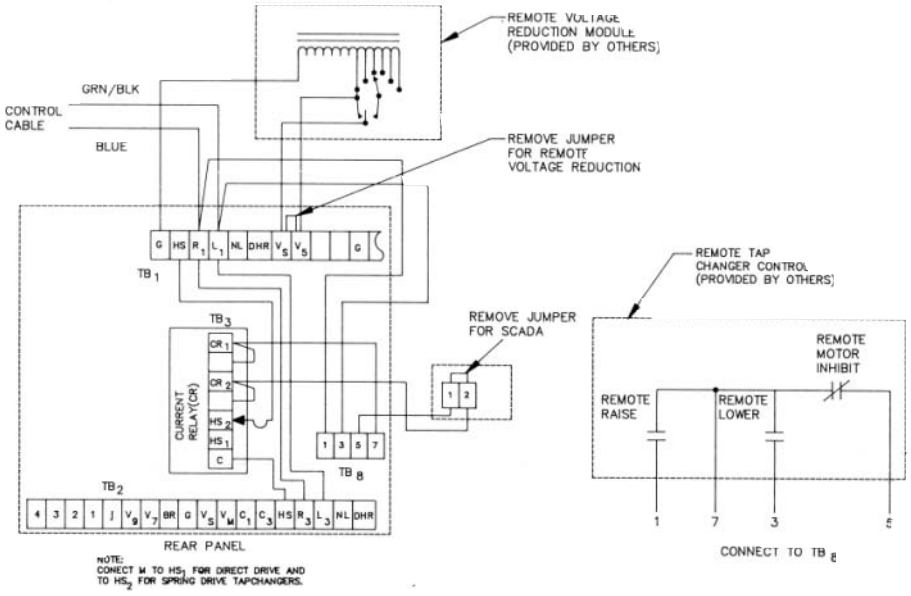

Figure 2-7.
SCADA connections to CL-2A control.

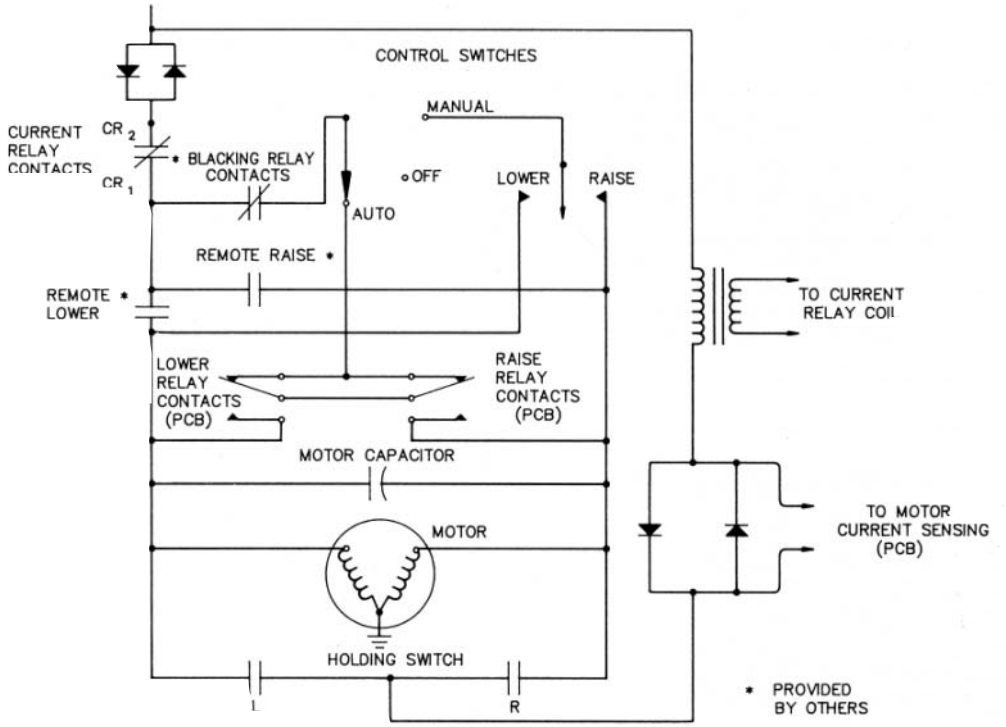

Figure 2-8.
SCADA connections to basic scheme.

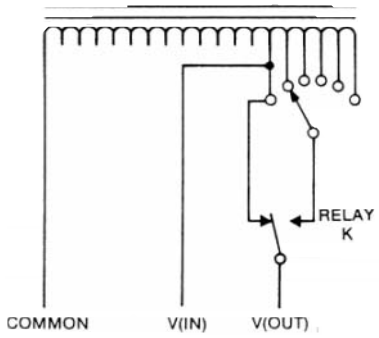

Figure 2-9.
Typical user provided voltage reduction module.

1. Count the number of wires in the existing control cable to determine which wiring schematic applies to your regulator. All VR-32 regulators produced in this period had either 8, 9, or 10 conductors in the control cable (Figure 2-10, 2-11, or 2-12).
2. Determine if the regulator is to be used at rated voltage, or at a lower tapped voltage. This can be found by referring to Table 2-1 on page 2-7. Using the regulator voltage rating, found on the nameplate, find the voltage rating in column 1 of Table 2-1. Then determine the nominal single-phase voltage at which the regulator will be used. Typical system voltages are found in column 2. If the exact system voltage is not listed, find the closest one. Then determine what internal tap is listed in column 3 for that system voltage.
   A. If it is “E1/P1” then the standard, current design CL2A control will work. order standard **part code #6070** and install as indicated.
   B. If it is either “E2/P2 or E3/P3” then a modified CL-2A must be used. This modification includes a special ratio correction transformer on the back panel. Call factory for order information.
3. Note that the tap changer terminal board (TCB) wiring is shown, but no modifications are required here. The disconnect plug in the existing control cable will still be operative. The 10 conductor cable schematic required that one voltage lead the white/black wire from V_2, be cut and insulated. It could also be disconnected at V_2 terminal on TCB located on the tap changer.
4. Tighten the waterproof lock-nut on cabinet top to the cable and cabinet.
5. Perform the operational check as described on page 2-2 to ensure correct operation.

The following applies to CL-1 design regulators only:

1. Unless there is a need to replace the back panel or cabinet due to physical damage, the upgrade to CL-2A can be accomplished by replacing the front panel **(part code** #6030) only. This is done following the instructions for CL-2A front panel removal and replacement found on page 1-7. Note that there are two (2) voltage end C.T. disconnect switches on someCL-1 controls rather than one (1). All switches must be operated as instructed to disconnect the voltage and short the C.T. if the regulator is energized at time of panel replacement. Note and follow the instructions located on the decal on existing CL-1 back panels for proper operation of the switches.
2. Perform the operational check as described on page 2-2 to ensure correct operation.

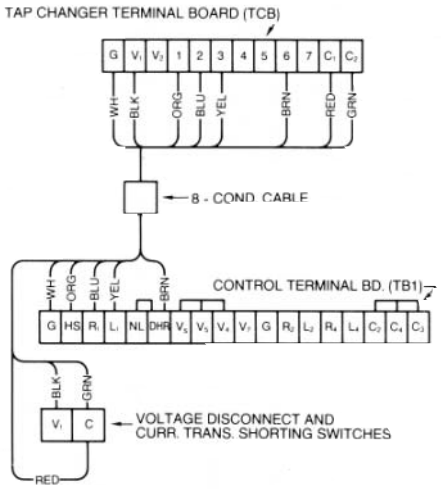

Figure 2-10.
8 - Conductor cable.

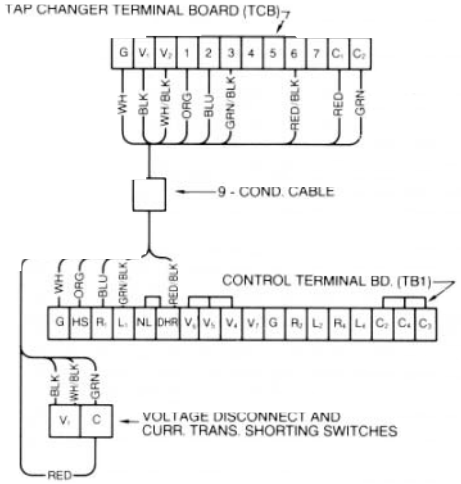

Figure 2-11.
9 - Conductor cable.

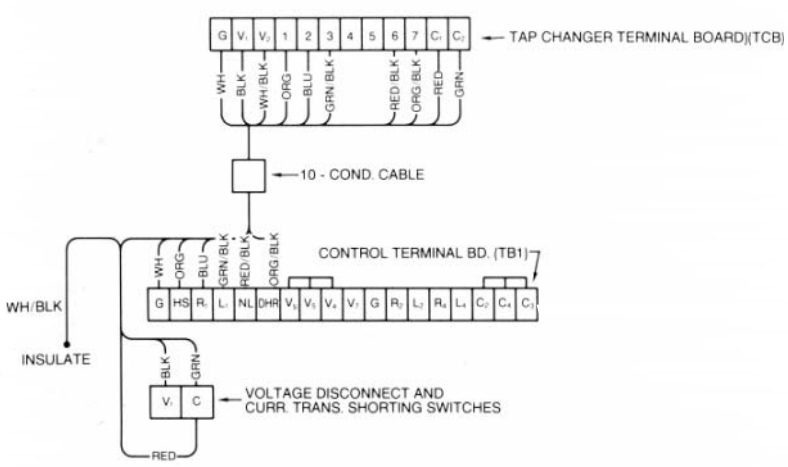

Figure 2-12.
10 - Conductor cable.

VR-32 REGULATOR TAP CHANGER • Section 3
TAP CHANGER OPERATION

Spring- and Direct-drive Tap Changers

Regulators for low-current applications employ stored-energy spring-drive tap changers. Commonly, they are used on ratings 219 amps and below. The tap changer for a specific rating is shown on the rating plate. Figures 3-1 (95 BIL) and 3-2 (150 BIL) illustrate typical spring-drive mechanisms. on regulators manufactured January 1976 and later, the model number is stamped on the drive frame. Common models are either 859 or 928 (Figure 3-1) and 170 (Figure 3-2), followed by a suffix letter.

Voltage regulators used in medium-and high-current applications employ direct-motor-driven tap changers. They have the motor and gear train moving the contacts through a geneva gear, pinion and scroll cam. Direct-drive tap changers are commonly applied above 219 amps. Both the mid-current, Model 770B (Figure 3-3) and high-current, Model 660C (Figure 3-4) are rated 150 BIL. See Table 3-1 for application chart of tap changer models.

MOTOR

The motor for the spring-drive tap changer is a capacitor-run, reversing gear-motor suitable for operation at 120 volts ac, singlephase, at 50/60-Hz. An integral braking mechanism controls motor coast.

The motor for the direct-drive tap changers is a capacitor-start, capacitor-run, high-torque, reversing, gear-motor rated 120 volts ac, single-phase, at 50/60-Hz, with an internal magnetically disengaging brake mechanism.

All components are compatible with hot transformer oil and the windings are oil cooled. The motors will carry locked-rotor current for at least 3000 hours.

REVERSING SWITCH

The reversing switch function changes the polarity of the tapped winding. When the spring-drive tap changer is in the neutral position, the reversing switch is open. When the direct-drive tap changer is in the neutral position, the reversing movable contact is in contact with the lower reversing stationary contact (VL).

The load current on all types is carried by the source bushing, the reactor, slip rings, main movable contacts, neutral stationary contact and the load bushing.

The reversing switch motion on the spring-drive tap changer occurs as the main movable contacts enter or leave the neutral position. A pin in the contact drive sprocket assembly engages a slot in the reversing segment when the main switch is in the neutral position. The first tap step in either direction rotates the segment and the reversing switch engages the appropriate reversing stationary.

The drive sprocket pin and reversing segment provide a mechanical stop located approximately 320 degrees on either side of neutral. When the pin engages the end of the segment, the spring-drive mechanism will be loaded and the segment is locked to prevent any further motion in that direction.

The reversing switch motion on the direct-drive tap changers occurs as the main movable contact moves from neutral to the first raise position. On the Model 770B tap changer, a roller on the back side of the rear roller plate engages a slot in the reversing segment on the reversing insulating arm. On Model 660C tap changer, a pinion, mounted on the same shaft as the rear roller plate, engages a slot in the reversing segment on the reversing insulating arm. As the rear roller plate rotates, the reversing movable contacts are driven from the VL reversing stationary contact to the VR contact.

Table 3-1
Tap Changer Model Application Chart.

Rated Volts (kV)	Load Current (Amp)	Rated kVA	Catalog Number	Tap Changer
2.5	100	25	RSAA025025AA	928D
	200	50	RSAA025050AA	928D
60	300	75	RSAA025075AA	770B
kV	400	100	RSAA025100AA	770B
	500	125	RSAA025125AA	660C
	668	167	RSAA025167AA	660C
	1000	250 S	RSAA025250AA	770B
	1332	333 S	RSAA025333AA	770B
	1665	416.3 S	RSAA025416AA	770B
5.0	50	25	RSAA050025AA	928D
	100	50	RSAA050050AA	928D
75	200	100	RSAA050100AA	928D
kV	250	125	RSAA050125AA	770B
BIL	334	167	RSAA050167AA	770B
	500	250 S	RSAA050250AA	660C
	668	333 S	RSAA050333AA	660C
	833	416.3 S	RSAA050416AA	660C
7.62	50	38.1	RSAA076038AA	928D
	75	57.2	RSAA076057AA	928D
95	100	76.2	RSAA076076AA	928D
kV	150	114.3	RSAA076114AA	928D
BIL	219	167	RSAA076167AA	928D
	328	250 S	RSAA076250AA	770B
	438	333 S	RSAA076333AA	660C
	548	416.3 S	RSAA076416AA	660C
	656	500 S	RSAA076500AA	660C
	875	667 S	RSAA076667AA	660C
	1093	833 S	RSAA076833AA	660C
13.8	50	69	RSAA138069AA	170C
	100	138	RSAA138138AA	170C
	150	207	RSAA138207AA	170C
95	200	276 S	RSAA138276AA	170C
BIVL	300	414 S	RSAA138414AA	770B
	362	500 S	RSAA138500AA	660C
	400	552 S	RSAA138552AA	660C
	483	667 S	RSAA138667AA	660C
	604	833 S	RSAA138833AA	660C
14.4	5	72	RSAA144072AA	170C
	100	144	RSAA144144AA	170C
	200	288 S	RSAA144288AA	170C
	231	333 S	RSM144333AA	770B
150	289	416 S	RSAA144416AA	770B
BkIVL	300	432 S	RSM144432AA	770B
	347	500 S	RSAA144500AA	660C
	400	576 S	RSAA144576M	660C
	463	667 S	RSAA144667AA	660C
	500	720 S	RSAA144720AA	660C
	578	833 S	RSAA144833AA	660C
19.92	25.1	50	RSM199050AA	170C
	50.2	100	RSAA199100AA	170C
	100.4	200 S	RSAA199200AA	170C
1k5v0	167	333 S	RSM199333AA	770B
BIL	200.8	400 S	RSAA199400AA	770B
	250	500 S	RSAA199500AA	770B
	335	667 S	RSAA199667AA	660C
	418	833 S	RSAA199833AA	660C

Note: An "S" following the kVA denotes station mount.
Spring-drive: 928D and 170C
Direct-drive: 770B and 660C

DRIVER MECHANISM - Spring-drive

Two steel extension springs are arranged in a triangular configuration to provide positive “spring-over-center” action to move the switch contacts. The mechanism is adjusted for smooth make and break contact action.

DRIVE MECHANISM - Direct-drive

The 770B and 660C tap changers employ drive mechanisms based upon the same design principle, and many components are interchangeable. The motor turns a geneva pinion three complete revolutions per tap change. The motion of the geneva pinion turns a six-tooth geneva gear, a main drive shaft, and a scroll cam 180 degrees per tap change. Each 180-degree movement of the scroll cam operates one of two roller plates and moves the corresponding main movable contacts 40 degrees. The combination of geneva gearing and scroll cam characteristics results in a threestep, wipe/transfer/wipe contact action.

Attached to the main (geneva gear) drive shaft is a planetary gear-type mechanical stop which prevents contact motion beyond the maximum raise and lower position.

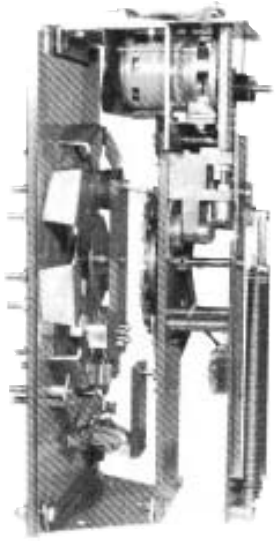

Figure 3-1
928D spring-drive tap changer.

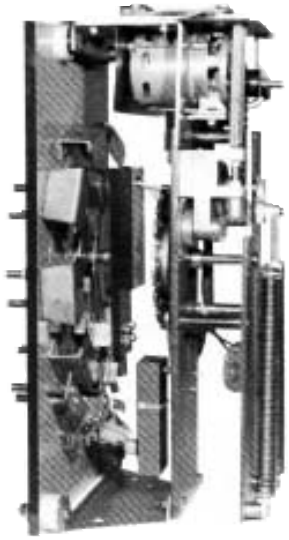

Figure 3-2
170C spring-drive tap changer.

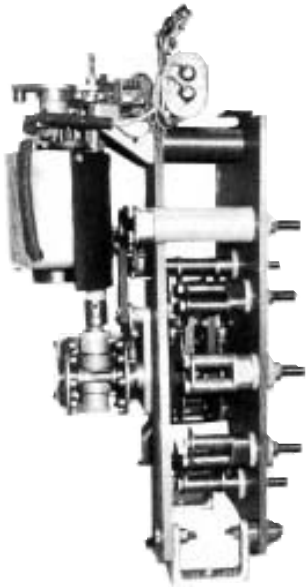

Figure 3-3
770B direct-drive tap changer.

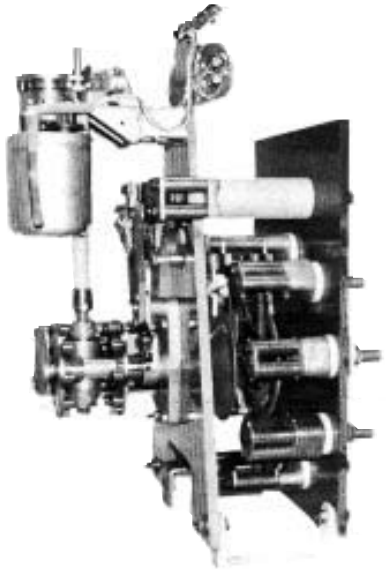

Figure 3-4
660C direct-drive tap changer.

CONTENTS

All movable and stationary contacts employ copper-tungsten or silver tips at points subjected to arcing duty. Contact points not exposed to arcing employ a combination of ETP copper and silver to provide a high conductivity current path. Movable contacts are split to make contact on both sides of mating parts and resist separation during high current surges. Contact pressure is maintained by steel leaf or compression springs. All contacts for current tap changer models can be retrofit to older models.

OPERATING SEQUENCE - Spring-drive

When the spring-drive switch is in the neutral position and the control calls for a tap change, the following events occur:

1. Motor brake releases and motor starts.
2. Motor holding switch closes, assuring that one tap change will be completed.
3. The up slope of sprocket cam engages a lip of the spool. This lifts the pin in the pin cam and frees it from the hole in the actuator.
4. A projection on the sprocket cam contacts a leg on the pin cam, and both turn.
5. Drive shaft, which is attached to the pin cam, begins to turn the crank arm and the springs begin to extend.
6. Pin comes free from the lip on the spool and a spring pushes it against the surface actuator.
7. Down slope of sprocket cam returns the spool to the start position.
8. Pin drops into the hole in the actuator 180 degrees from the start position.
9. At this point, the crank arm is at top dead center and the springs are fully loaded. Drive shaft and crank arm, sprocket cam, pin cam, and actuator are locked together and connected through the chain to the motor.
10. Motor drives all parts beyond top dead center.
11. Spring unloads, pulling pin cam and actuator through 18O degrees at high speed. Pins on the actuator cause the contact drive sprocket to index one tap position.
12. As the contact drive sprocket moves, it imparts motion to the reversing switch segment and main movable contacts. This action closes the reversing movable and reversing stationary contacts and drives the main movable contact onto the adjacent main stationary contact. Also, the neutral light switch opens.
13. Motor continues to turn the sprocket cam until the motor holding switch opens. The gear motor output shaft has completed one revolution.

Should more than one tap change be required, the foregoing sequence will be repeated {except reversing switch portion) until the control is satisfied or the limit switch in the position indicator is reached.

OPERATING SEQUENCE - Direct-drive

When the switch is in neutral and the control calls for a tap change in the raise direction, the following events occur:

1. Motor brake releases and motor starts.
2. Geneva pinion rotates counter-clockwise to engage the geneva gear.
3. Geneva pinion drives the geneva gear, main drive shaft, and scroll cam through 60 degrees and produces initial wipe action atthe front main movable contact and reversing movable contacts.
4. Motor holding switch closes, assuring that one tap change will be completed.
5. Geneva pinion completes first revolution and continues to rotate.
6. Geneva pinion drives the geneva gear through 60 degrees and the scroll cam and roller plates transfer the front main movable contacts from the neutral stationary contact N to the stationary contact No. 1. Simultaneously, the reversing movable contact is transferred from the reversing stationary contact (VL) to the stationary contact (VR).
7. Neutral light switch opens.
8. Geneva pinion completes second revolution and continues to rotate.
9. Geneva pinion drives the geneva gear, main drive shaft, and scroll cam through 60 degrees and produces final wipe action at the front main movable and reversing movable contacts.
10. Motor holding switch opens.
11. Motor brake engages.
12. Motor stops.

A tap change from No. 1 raise position to neutral will be accomplished as described, except the geneva pinion will rotate clockwise. The reversing movable contact will be transferred from the reversing stationary contact (VR) to the stationary contact (VL).

TROUBLE SHOOTING GUIDE • Section 4

COMPLETE REGULATOR IN SERVICE

WARNING: When trouble shooting energized equipment, caution should be taken to wear protective gear and to avoid personal contect with energized parts. Failure to do so may cause serious injury or death.

External Check

When service personnel arrive at what appears to be a malfunctioning regulator, it is advisable to examine the power connections first. For example, verify that the source lead is connected to the source bushing; that the load lead is connected to the load bushing; and that the source-load lead is connected to the sourceload bushing. Check other potential problems, such as an open ground connection.

Defining The Problem

Figures 1-17, page 1-16 can be used while diagnosing the problem.

After the external power connections have been checked, check the voltage-disconnect knife switch (V_1 and V_6 if present) and the current shorting knife switch (C) of the rear panel signal circuit in the control box. Close the voltage disconnects if open. open shorting switch, if closed.

Check for loose connections or burnt wiring.

Make sure ratio-correcting transformer RCT1 is on the correct tap for the regulated voltage shown on the nameplate on the control box door.

Remove the motor and panel fuses from the control and check for continuity across each fuse. Spares, if needed are included with the control.

NOTICE: Use only 350 volts ac, slow-blow ceramic fuses of the proper current rating. Failure to do so may cause unnecessary fuse operation or insufficient protection of the regulator and control.

If the above checks do not identify the problem, determine which of the following three categories best describes the malfunction, and follow the corresponding diagnostic steps:

THE REGULATOR WILL NOT OPERATE MANUALLY OR AUTOMATICALLY

Diagnosing trouble:

A. Set the CONTROL switch on RAISE.
B. Measure the voltage between terminals R_1 and G on terminal board TB1. The voltage reading should be approximately the set voltage setting.
C. Set the CONTROL switch on LOWER.
D. Measure the voltage between terminals L_1 and G on terminal board TB1. The voltage reading should be approximately the set voltage setting.
E. If correct voltage readings are obtained in steps B and D above, the trouble may be in the position indicator, junction box, or control cable. Refer to the junction box troubleshooting section on page 4-2.
G. If there is no voltage measurement in either step B or D, make a corresponding measurement (R_3 to G and L_3 to G) on lower terminal board TB2.
H. If the voltages measured in Step G are approximately the set voltage setting then the fault is likely a loose connection or a faulty terminal swage between TB1 and TB2.
I. If steps B, D, and G do not provide voltage readings, measure the voltage between VM and G on terminal board TB2. The reading should be approximately the set voltage setting.
J. If Step I measures correctly, the trouble could be an open motor fuse, power switch, or control switch of the control.
K. If Step I does not yield a voltage measurement check the voltage between PD_11 (V1) and ground (G) at the voltage disconnect knife switch.
   1. If approximately the set voltage setting is obtained, the V1 disconnect or the ratio correcting transformer (RCT1) of the rear panel signal circuit is probably faulty.
   2. If voltage is not obtained, the trouble is in the control cable junction box, or regulator tank. Refer to the junction box troubleshooting section on page 4-2. If the junction box checks are satisfactory, the trouble is in the regulator tank. See *S225-10-2* for the trouble shooting method.

THE REGULATOR WILL OPERATE MANUALLY BUT NOT AUTOMATICALLY

Diagnosing trouble:

A. Measure voltage from VS to G on lower terminal board TB2.
   1. A measurement of approximately the set voltage setting at VS to G indicates that the problem is in the control.
   2. If there is no voltage present at VS to G, the trouble is in the V1 disconnect or ratio-correcting transformer of the rear signal circuit.
B. If check A indicates that the trouble is in the control, refer to *Control Trouble Shooting,* below.

THE REGULATOR OPERATES MANUALLY BUT OPERATES INCORRECTLY WHEN SET ON AUTOMATIC

Diagnosing trouble:

Run the regulator to the neutral position with the control switch. Check for voltage between V_4 and G on TB1. This is the sensing circuit supply voltage from the output of RCT1 on the rear panel. If this voltage is more than 10% above or below the programmed voltage level setting of the control, then the source is beyond the range of the regulator. An absence of voltage would indicate a wiring problem such as an opening somewhere in the control power supply. If these checks are correct, then the malfunction is probably in the control. Refer to *Control Trouble Shooting,* below.

Junction Box Trouble Shooting

This section is used if the regulator will not operate manually. (Problem was isolated to junction box or regulator tank after checking-out control, on page 4-1).

The junction box is composed of a terminal board, the position indicator, and the control box interconnections. Refer to Figure 4-1, when the following steps are made:

1. Remove the regulator from service, as stated on page 1-8.
2. Ground the three high-voltage bushings.
3. Open V_1 disconnect switch on rear panel (and V_6 if present) of control cabinet.
4. Remove junction box lid.
5. Check the wiring on the junction box terminal board for loose connections, burnt wiring, or bad swage joints.
6. A. Set the POWER switch to EXTERNAL.
   B. Apply a 60/50 Hz, 120-volt ac nominal variable source to the EXTERNAL SOURCE terminals.
   C. Set the CONTROL switch on RAISE.
   D. Lift the RAISE/LOWER switch.

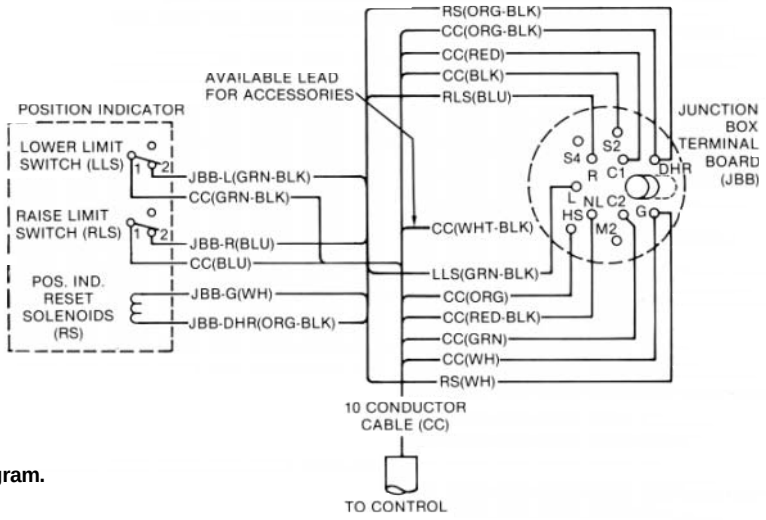

Figure 4-1.
Junction box wiring diagram.

E. Set the CONTROL switch on LOWER.
F. Measure the voltage between terminals L and G on terminal board. The voltage reading should be approximately 120 volts act
G. If correct voltage readings are obtained in steps B and D above, the trouble is in the regulator tank. Refer to troubleshooting section of *S225-10-2.*
H. If there is no voltage measurement in either step B or D, the problem is in the limit switches inside the position indicator or the control cable.

7. Check the continuity of the raise and lower limit switches. The switches should be closed on all tap changer positions except for the set limit switch positions of the indicator dial. To check the continuity:
   A. Remove position indicator green-black lead from splice terminals.
   B. Place the meter lead on the disconnected lead and the other lead on terminal L of the junction box terminal board. Then check continuity.
   C. If a continuity problem occurs, refer to *Position Indicator Replacement,* on page 4-3.
   D. Remove the position indicator blue lead from the splice terminal.
   E. Place the meter lead on the disconnected lead, and the other lead on terminal R of the junction box terminal board. Check continuity.
   F. If a continuity problem occurs, refer *to Position Indicator Replacement,* on page 4-3.
8. Check the reset solenoid of position indicator. Push the DRAG HAND RESET switch while measuring the voltage between DHR and G on the terminal board. The voltage reading should be approximately 120 volts ac and DRAG HANDS will reset.
   A. If 120 volts is read and drag hand will not reset, refer to *Position Indicator Replacement* on page 4-3.
   B. If 120 volts is not read; refer to *Control Trouble Shooting,* on page 4-1.

Position Indicator Replacement

The following instructions apply only to the junction box mounted position indicator construction that was initiated in April, 1980.

To replace a defective position indicator requires removing the unit from service as outlined in **REMOVAL FRoM SERVICE** on page 1-8.

1. A defect in the position indicator may have caused loss of synchronization between the tap changer and the indicator hand. Verify that the tap changer is in neutral via the neutral light of the control and visual inspection of the tap changer. If the position indicator does not also show neutral, refer to instructions in *S225-10-2, Spring-and-Direct Drive Tap Changers.*
2. Remove the junction box cover.
3. Note the location of the indicating hand for future alignment and disengage the flexible shaft from the position indicator shaft.
   A. In early 1986 this joint was changed to a set screw type coupling.
   B. Older equipment employed a cotter pin coupling.
4. Disconnect the four leads from the junction box terminal board and open the two splice terminals to the control cable.
5. Remove the three bolts holding the indicator to the junction box and slide the indicator free.
6. Remove the gasket from the groove on the back of the indicator body.
7. Clean the gasket surface of the junction box and the gasket and groove on the new indicator.
8. Place the gasket in the groove and insert the leads through the junction box wall, align the holes and install the three bolts finger tight.
9. Wrench-tighten the bolts to evenly compress the gasket and bring the indicator body tight against the junction box.
10. Connect the six leads to the terminal board and control cable leads per Figure 4-1 and secure all connections.
11. Turn the indicator drive shaft to place the hand at the previously noted position.
12. Slide the flexible shaft coupling over the indicator shaft and secure the joint.
13. Position the wire to prevent snagging on the coupling or cotter pin. Secure with the wraps.

14. Connect a 120-volt ac external power supply to the control.
15. Run the tap changer manually to verify alignment of the position indicator hand and the neutral light. If correction is required:
    A. Stop the tap changer with the neutral light on.
    B. Disconnect the flexible shaft from the back of the indicator.
    C. Turn the indicator shaft to center the hand at zero (neutral).
    D. Reconnect the flexible shaft.
16. Run the tap changer to both raise and lower extremes to check operation of the limit switches and coordination with holding switch.
17. Run between position nine raise and nine lower to check neutral light and position indicator alignment. Run several cycles.
18. Should the alignment of the position indicator hand and the neutral light become unstable during this check, an internal inspection of the tap changer and position indicator shaft is required. See S225-10-2 for instructions.
19. Return the tap changer to the neutral position and disconnect the power supply.
20. Replace the junction box cover.
21. The unit may now be placed into service as outlined on page 1-5.

CAUTION: It must be verified that BOTH the neutral light AND the position indicator hand indicate NEUTRAL when the tap changer is physically in the neutral position. Lack of the synchronization will cause an indefinite indication of NEUTRAL. Without both indications of neutral, bypassing of the regulator or at a later time will not be possible, and the line must be de-energized to avoid shorting part of the series winding.

FRONT PANEL TROUBLE SHOOTING

At this point, the problem has been determined to be in the control, so the front panel should be taken out of the control cabinet and taken to a service bench for trouble shooting. Figure 2-3 and 4-2 can be used to aid the trouble shooting process. Except for the line drop compensation circuit, the panel components are checked by using an external voltage of approximately 120 volts ac, 50/60 Hz, applied to the external source terminals of the control.

1. Check the motor and panel fuses to ensure they have not blown.
2. Place the power switch on the EXTERNAL position.
3. On the power switch, measure the voltage from terminal 2 to ground and terminal 5 to ground. These measurements should be equal to the external voltage applied. If not, the power switch is defective.
4. Set the LDC CONTROL switch on the OFF position and the VOLTAGE SETTING fine adjustment to 0. With an ac voltmeter having at least 1OOO ohms/volt connected to the INPUT (terminals 10 and 11) of the circuit board, perform the following measurements at each setting indicated:

Coarse Voltage Setting	Measure Voltage at Input Terminals
105	66.9
110	63.9
115	61.1
120	58.6
125	56.3
10	54.1

Since this is not a calibration type measurement, there may be some variation in these measurements depending upon how close to 120.0 volts the applied voltage actually is. Expect less than 3% variation. The objective is to look for sudden discontinities in the voltage measurements. If the measurements are dramatically different from those above, or if discontinuities are observed, suspect either the coarse VOLTAGE SETTING (VSC1) switch or the INPUT POTENTIAL TRANSFORMER (IPT). The problem can be isolated by checking the components individually.

5. With the coarse VOLTAGE SETTING switch on the 120-volt position, vary the fine VOLTAGE SETTING rheostat from zero (0) to 5.0 volts. The measured voltage (at the INPUT terminals) should drop smoothly **about** 2.5 volts. If no variation occurs, or if discontinuities are observed, suspect either the fine VOLTAGE SETTING rheostat (VSC2) or transformer (IPT).

   The front panel circuits for the DRAG-HAND RESET solenoid (DHR) and NEUTRAL LIGHT (NL) can be checked as follows:

   a. Connect the ac voltmeter from G to DHR on the fanning strip TB2.
   b. Depress the DRAG-HAND RESET toggle switch and observe approximately 120-volts on the voltmeter. If no voltage is measured, the switch is probably defective.
   c. Connect the AC voltmeter from G to NL on fanning stripTB2. d. Activate the NEUTRAL LAMP TEST toggle switch and observe approximately 120 volts on the voltmeter **and** note that the neutral light should come on. If no voltage is measured and the light **does not** come on, the switch is probably defective. If voltage **is** measured but the light does **not** come on, the lamp or lamp holder is defective.

The line drop compensation components should be checked next, but only if there is strong suspicion of a problem. In reality, field failures of these components is extremely rare. To perform this analysis, the printed circuit board must first be disconnected by dropping the fanning strip away from the circuit board terminal strip. This procedure requires a current source of .200 amps which will periodically be readjusted during the test as a result of the changing loading conditions. The procedure follows:

1. Switch the POWER switch to EXTERNAL.
2. Connect a jumper from the EXTERNAL SOURCE terminal to ground.
3. Apply and maintain a test current source of 0.2 amp from C1 to C3 on the fanning strip for terminal strip TB2.
4. Connect a 1000 ohms/volt ac voltmeter to the terminals marked INPUT on the fanning strip for the printed circuit board.
5. Switch the LDC control switch to (+X+R).
6. Set the coarse and fine REACTANCE controls (X1 and X2) to zero (0).
7. Vary the RESISTANCE control (R1) and read the voltage at the major points across the dial. The measured voltage at these points should be half the RESISTANCE control dial setting ±3.5%. Erratic behavior indicates a defective resistance control. A serious deviation from expected readings at all levels indicates a defective R2. R2 is selected to yield a resistance of 270 ohms ±3.5% from terminal 1 to terminal 3 of the resistance control (R1).
8. Set the RESISTANCE. control at 24 volts on the panel and switch the LDC control from the (+X+R) setting through the other two positions (-X+R and +X-R). The voltage reading should be constant. Any change indicates a probable defective LDC control switch.
9. Check the coarse REACTANCE control. A. Set the RESISTANCE control to zero (0).

B. Switch the LDC control to (+X+R) and operate the coarse REACTANCE control through all positions.

The voltage reading in each switch position should be half the dial setting. This reading cannot be taken as precise, unless a current source, virtually free of high-order harmonics, is used. This is not normally available in a typical test set up. The unit is calibrated at the factory and any trouble should be indicated by a significant deviation from the values provided in this trouble shooting outline. In this case, a deviation indicates a detective REACTANCE switch (X1) or reactor (X3).

10. Set the coarse REACTANCE control at 10 volts. Rotate the fine REACTANCE control through all positions. The voltage reading at each position should be half the sum of 10 plus the respective fine REACTANCE control setting. A deviation indicates a defective fine REACTANCE switch (X2) or reactor (X3).
11. Set the coarse REACTANCE control at 10 volts and the fine REACTANCE control at zero (0), and then switch the LDC CONTROL through (-X+R) and (+X-R). The reading should remain constant. A deviation indicates a defective LDC CONTROL switch.

If the results of all the previous linedrop compensation tests deviate significantly from the values provided in this outline, the LDC CONTROL switch or the auxiliary current transformer (ACT) are the most likely problem areas.

If all the above checks are satisfactory, the trouble is likely to be in the printed circuit board. Refer to the Circuit Board Trouble Shooting procedures which follow.

CIRCUIT BOARD TROUBLE SHOOTING

Recalibration

This precise check should be made on a service bench with the control removed from the control box. (See instructions for control removal and replacement on page 1-7.)

> **CAUTION:** Use only a high impedance (3000 ohms minimum) RMS meter for measurements.

VOLTAGE LEVEL SETTING AND BANDWIDTH

1. Switch the POWER switch to EXTERNAL.
2. Switch the LINE-DROP COMPENSATION control switch to OFF.
3. Set the VOLTAGE SETTING control to 120 volts.
4. Set the BANDWIDTH control to 2 volts.
5. Connect an accurate, true-RMS-responding voltmeter of at least 3000 ohms impedance to the VOLTMETER terminals.
6. Connect a variable external 50/60-Hz voltage source with less than 5% harmonic content to the EXTERNAL SOURCE terminals.
7. Close dipswitch position 3.
8. Raise the applied voltage approximately 120 volts and adjust until the band indicators stop flashing, indicating mid-band.
9. The voltage applied should be 120 ±0.25 volts act If not, set the applied voltage to **exactly** 120.0 volts ac and adjust R10 (voltage level calibrator) on the printed circuit board until both indicators are off.
10. Slowly vary the input voltage up and down, noting the points that the HIGH and LOW visual indicators switch on. These points should be symmetrical, and should be one volt above and one volt below the 12O-volt nominal setting with an accuracy of .3 volt.

If this is not true, proceed with the trouble shooting section.

> **WARNING:** Care must be exercised if the printed circuit board is to be removed or tested while the control is energized. Shock hazard is present.

It is convenient to troubleshooting printed circuit board circuitry while it is mounted in the control; however, the board can also be checked after it is removed from the control. The board should be serviced in a properly equipped service facility and not in the field. In this section use Figure 4-3 to assist in trouble shooting.

The use of in-circuit component testers should be avoided since their use can cause damage to the microcomputer IC1. All soldering and unsoldering must be done with an isolated soldering iron. Good anti-static procedures must be followed during component replacement.

Replacement of the microcomputer is to be avoided. Return the printed circuit board to an approved service facility for repair.

PRINTED CIRCUIT BOARD LEFT IN THE CONTROL

1. Set the LINE-DROP COMPENSATION control to OFF.
2. Set the POWER switch to EXTERNAL.
3. Set the VOLTAGE SETTING to 120 volts.
4. Set the BANDWIDTH to 2 volts.
5. Set the TIME-DELAY to 20 seconds.
6. Apply a 50/60-Hz, 120-volt ac nominal variable source to the EXTERNAL SOURCE terminals, making sure that the source ground is connected to the panel ground (white post).

PRINTED CIRCUIT BOARD REMOVED FROM THE CONTROL

1. Set the BANDWIDTH control two positions clockwise from its extreme counterclockwise position.
2. Set the TIME-DELAY control two positions clockwise from its extreme counterclockwise positions.
3. Connect a 120-volt ac supply to V3 terminal (13) and G (ground) terminal (12). observe ground.
4. Connect one end of a 390-ohm ±2% resistor to either INPUT terminal (10 or 11) on the printed circuit board.
5. Connect the other end of the 390-ohm resistor and the other printed circuit board INPUT terminal to a variable isolated 60-volt ac, 50/60 Hz supply.

The input voltage and equivalent bandwidth on the printed circuit board are related to 600-volt ac and are, therefore, one-half the 120-volt ac level applied to the control.

Note on the lower left-hand side of the circuit board a 16 pin connector. Each pin of this connector corresponds to a test point as shown on the schematic diagram in figure 4-3. The pin designations are TP_O, TP_1, $TP_.$, --- TP_{15}, labeled from top to bottom. Also, immediately above the connector is a swaged terminal which is connected to TP_O. This provides an alternate point of attachment when making circuit board measurements.

CHECK No. 1 - POWER SUPPLY AND REFERENCE

The following measurements can be made with a multimeter with an accuracy of 2%, having at least 5000 ohms/volt dc and 1000ohms/volt act The inputvoltage will either be held in band or varied from band edge to band edge.

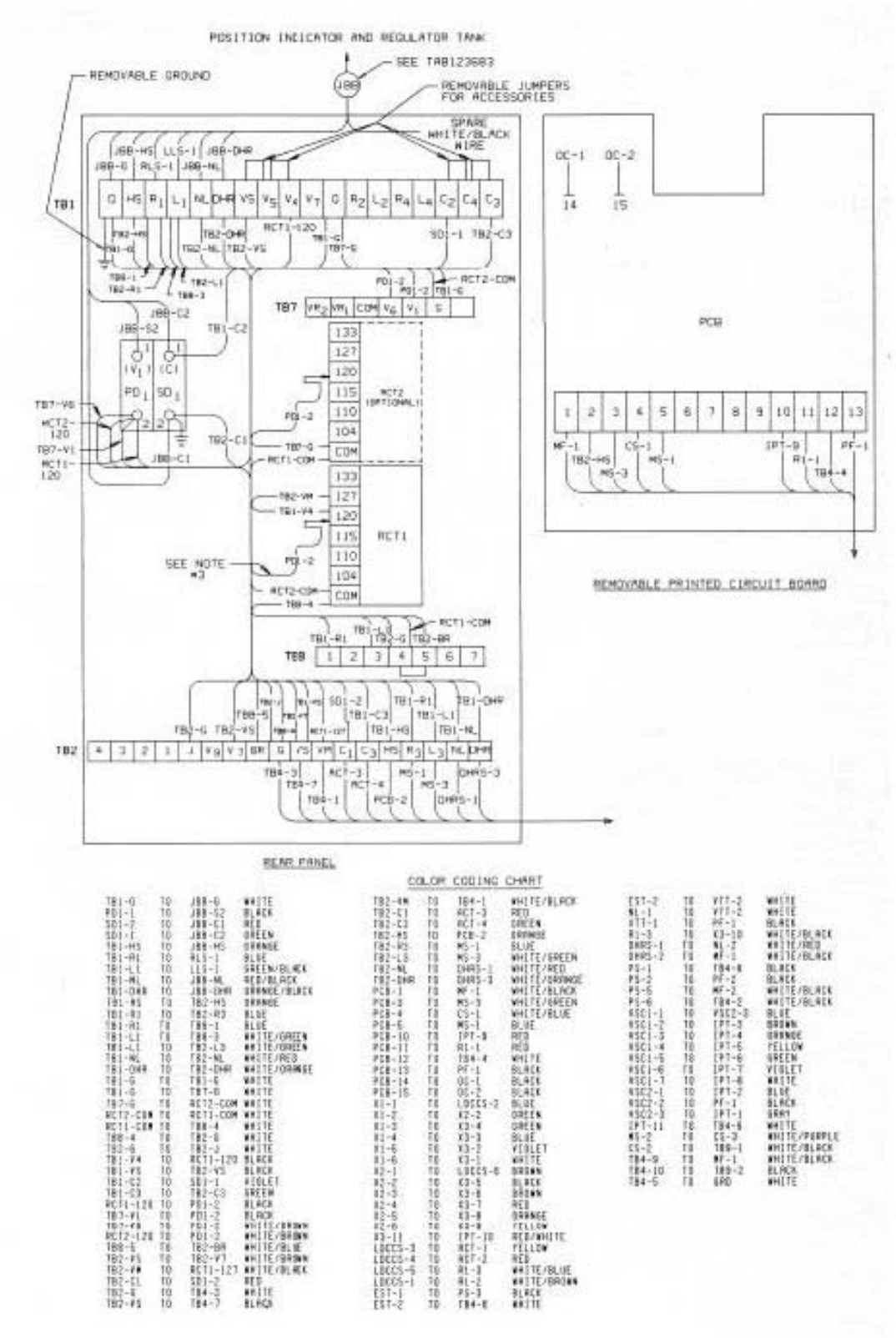

Figure 4-2.
Physical wiring.

S225-10-5

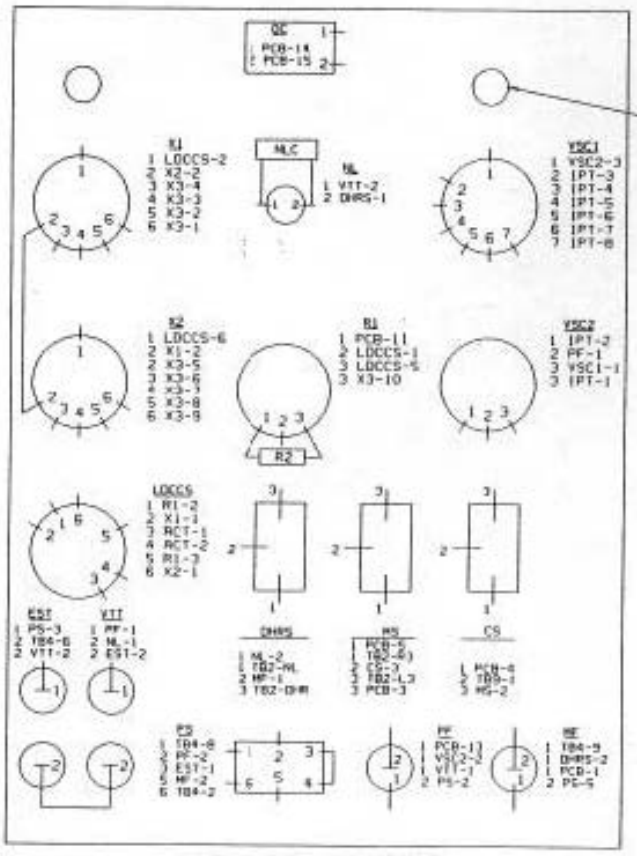

ACT - AUXILIARY CURRENT TRANSFORMER
CS - CONTROL SWITCH
DHRS - DRAG HAND RESET SWITCH
EST - EXTERNAL SOURCE TERMINALS
IPT - INPUT POTENTIAL TRANSFORMER
JBB - JUNCTION BOX TERMINAL BOARD ON THE COVER
LDCCS - LINE DROP COMPENSATION CONTROL SWITCH
LLS - LOWER LIMIT SWITCH (POSITION INDICATOR)
MD - MOTOR DIODES
MF - MOTOR FUSE
MOV - METAL OXIDE VARISTOR
MS - MANUAL SWITCH
NLC - NEUTRAL LIGHT CAPACITOR
NL - NEUTRAL LIGHT
OC - OPERATIONS COUNTER
PCB - PRINTED CIRCUIT BOARD
PD - POTENTIAL OPENING DEVICE
PF - PANEL FUSE
PS - POWER SWITCH
R1 - LINE DROP COMPENSATING RESISTANCE SETTING
R2 - TRIM RESISTOR
RCT - RATIO CORRECTION TRANSFORMER
RLS - RAISE LIMIT SWITCH (POSITION INDICATOR)
SD - CURRENT SHORTING DEVICE
TB - CONTROL TERMINAL BOARD
VSC1 - COARSE VOLTAGE SETTING CONTROL
VSC2 - FINE VOLTAGE SETTING CONTROL
VTT - VOLTAGE TEST TERMINALS
X1 - LINE DROP COMPENSATING REACTANCE COARSE SETTING
X2 - LINE DROP COMPENSATING REACTANCE FINE SETTING
X3 - LINE DROP COMPENSATION REACTOR

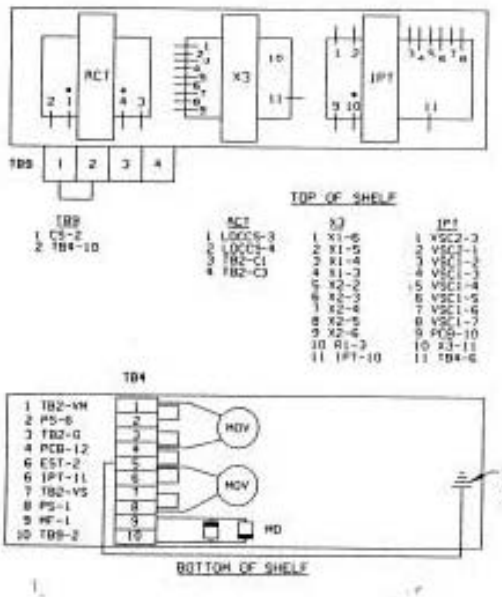

NOTES:

1. THE CODED IDENTIFICATION BESIDE EACH NUMBERED TERMINAL IDENTIFIES THE ORIGIN OF THE LEAD BY COMPONENT AND TERMINAL.
2. FOR LARGE ADJUSTMENT OF RATIO CORRECTION, PLACE OUTPUT LEAD JBB-S2 ONTO THE AVAILABLE PUSH ON TAB (LOCATED AT THE TERMINAL BOARD ON TOP OF THE TAP CHANGER) AS SPECIFIED ON THE NAMEPLATE PER LOAD VOLTAGE.
3. FOR FINE ADJUSTMENT OF RATIO CORRECTION PLACE INPUT LEAD P11-2 ON THE RCT TAP SPECIFIED ON THE NAMEPLATE PER LOAD VOLTAGE. THIS LEAD HAS A FLANGED SPADE TERMINAL FOR EASY REMOVAL.

VR-32 Regulator and CL-2A Control

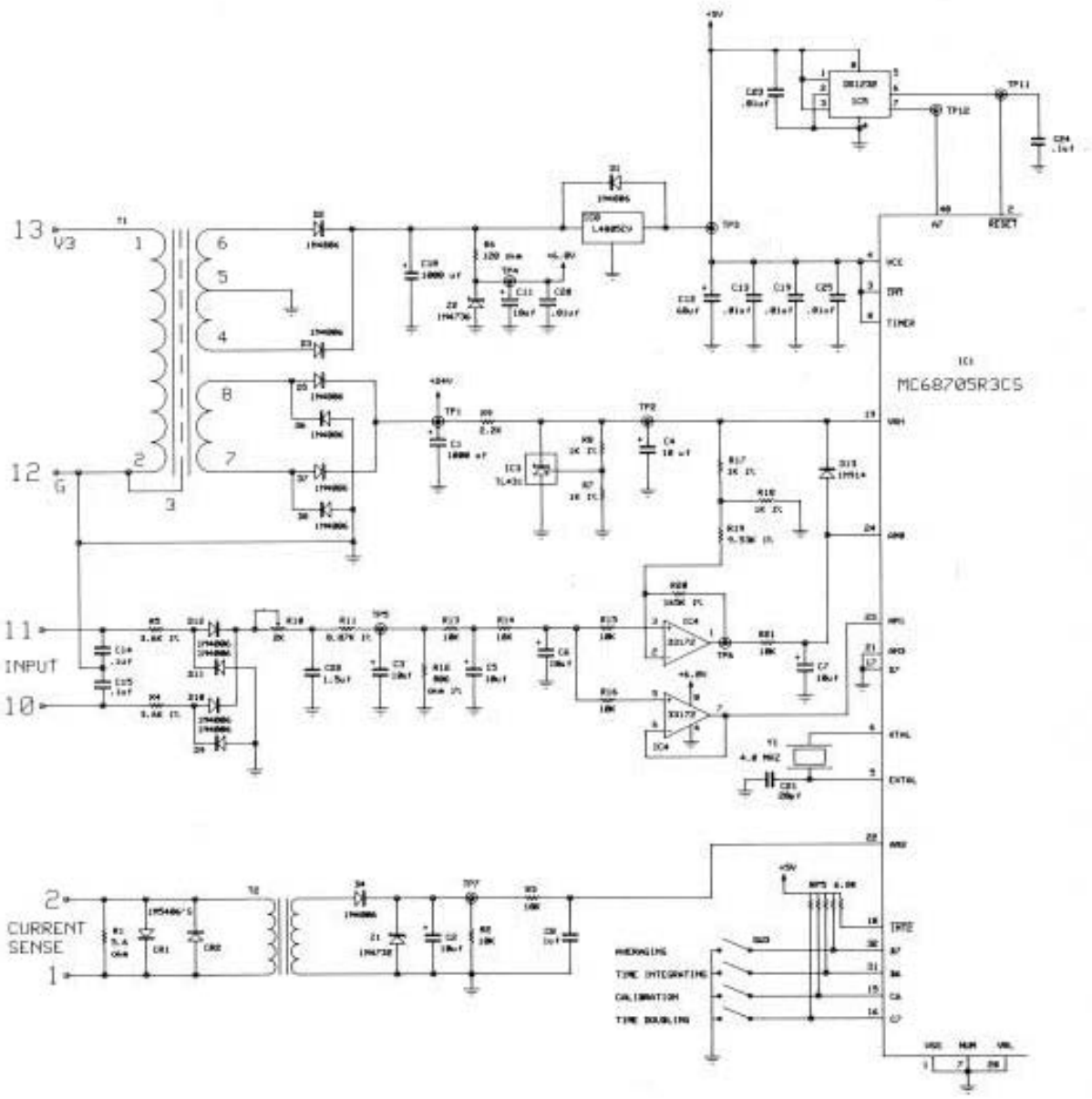

Figure 4-3.
Printed circuit board schematic.

S225-10-5

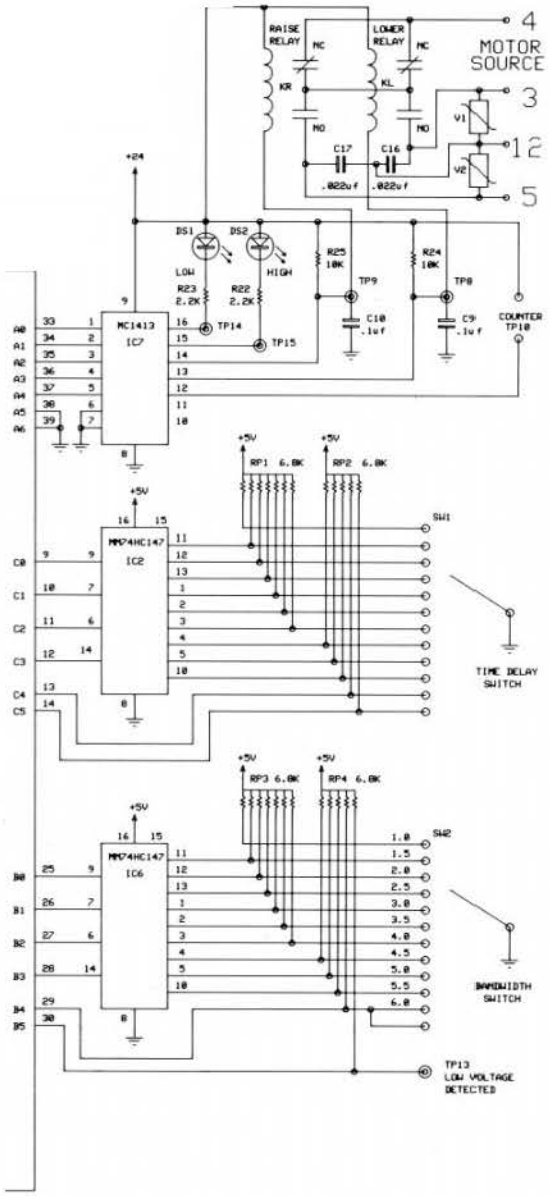

CL-2A Circuit Board Parts List

ITEM	DESCRIPTION	
R1	5.6 OHM 1/2W	5%
R2,3,13,14,15,16,21,24,25	10K 1/4W	5%
R4,5	3.6K RN60	1%
R6	120 OHM 1/2W	5%
R7,8,17,18	1K 1/4W	1%
R9,22,23	2.2K 1/2W	5%
R10	2K TRIMPOT 3006Y-1-202	
R11	8.87K 1/4W	1%
R12	806 OHM 1/4W	1%
R19	9.53K 1/4W	1%
R20	165K 1/4W	1%
RP1,3	6.8K SIP 4608X-101-682	
RP2,4,5	6.8K SIP 4606X-101-682	
D1,2,3,4,5,6,7,8,9,10,11,12	1N4006 DIODE	
D13	1N914	
DS1,2	LED MV5152	
CR1,2	1N5406	
Z1	1N4732	
Z2	1N4736A	
C1,18	1000 mf 50V UVX1H102MHA	
C2,3,4,5,6,7,11	10 mf 16V UVX1H102MHA	
C9,10,14,15	.1 mf 400V 16104J400G	
C8	1 mf 50V AVX SR-30 5E105MAA	
C12	68 mf 16V 10% SOLID TANTALUM	
C13,19,20,23,25	.01 mf 50V ECQ-V1H103JZ	
C16,17	.022 mf 1000V 50L2223	
C21	20 pf 16V DD-200	
C22	1.5 mf 50V TANTALUM T354E155K050AS	
C24	.1 mf 50V ECQ-V1H104JZ	
IC1	MC68705R3CS	
IC2,6	MM74HC147N	
IC3	TL431ILP	
IC4	MC33172P	
IC5	DS1232N	
IC7	MC1413P (ULN2003A)	
IC8	L4805CV	
Y1	4.0 MHZ CRYSTAL MP-1-4.0-3L	
SW1,2	12 POSITION ROTARY SWITCH (CTS)	
SW3	4 POS. DIP SWITCH 78RB04S	
T1	TRANSFORMER TAA142701	
T2	TRANSFORMER TAA142702	
KL,KR	RELAY GUARDIAN 1665-2C-24D OR TAKAMISAWA VB24STCU-E	
V1,2	V150LA10A	
CON2	TERMINAL STRIP SSW-116-01-T-	
CON1	CUSTOM CONNECTOR GPCB-13	
HEATSINK	THERMALLOY 6073B-SNE-1	
HEATSINK INSULATOR	THERMALLOY 43-77-9	
LED SPACER	HHS 4001	
FINE THREAD LOCKWASHER	BOURNS H-37-2	
CIRCUIT BOARD		

Now, with the input voltage set at nominal (in band), the following power supply voltages should be obtained between the specified test point and TP_0:

Table 4-1
Power Supply Voltages at Test Points

Test Point	Volts dc
TP_1	+28 ± 15%
TP_2	+5.0 ± 2%
TP_3	+5.0 ± 5%
TP_4	+7.0 ± 10%

Failure to Conform #1

Condition	Probable Fault
TP_1 Low	D_5, D_6, D_7, D_8
TP_2 Off	R_9, IC_3, C_4 or IC_1
TP_3 Off	IC $_8$, D_1, IC_5 or IC_1
TP_4 Off	R6, Z_2, C_{11} or IC_4
TP_3 and TP_4 Low	D_2, D_3, C_{18}, IC_8

If all power supply voltages are correct, each circuit generating an input to the microcomputer should be checked by taking the following steps:

CHECK NO. 2 - INPUT AND FILTERING

1. Connect the multimeter to test points TP_0 and TP_5.
2. Measure 2.5 volts dc ± 5% at TP_5.
3. Connect an ac coupled meter having a 200 millivolt range to test points TP_0 and TP_5. The reading should be less than 100 millivolts.

Failure to Conform #2

Condition	Probable Fault
DC Voltage Off	Any components up to TPs in the input section
AC Ripple High	D_9, D_{10}, D_{11}, D_{12}, C_{22}, C_3

CHECK NO. 3 - DIFFERENTIAL AMPLIFIER

1. Connect the multimeter to test points TP_0 to TP_6.
2. Adjust the input supply until the reading at TP_6 is 2.5 volts dc. The input should be 60 volts ac or 120 volts ac ±5%, depending upon the board being out of or in the control, respectively.
3. Switch the multimeter to ac and read less than 20 millivolts.
4. Switch back to dc.
5. Vary the input and read a 0.625-volt change at TP_6 for each 2.0-volts ac change in the input related to the 120 volts ac input supply.

Failure to Conform #3

Condition	Probable Fault
Input supply out of tolerance for 2.5 volts ac at TP_6 or ac ripple high	R_{17}, R_{18}, C_6, or IC_4
Output swing to input swing Off	R_{19}, R_{17}, R_{18}, R_{20} or IC_4

CHECK NO. 4 - MOTOR CURRENT SENSE

To test the motor current sensing circuitry of the circuit board, approximately .120 amps of current must be applied to the CURRENT SENSE input (terminals 1 & 2). This is accomplished as follows:

1. First connect the multimeter from TP_0 to TP_7, set for DC volts of a scale to read up to 5.0 volts.
2. With the board in the control, connect a 1000-ohm, 20-watt resistor **momentarily** from G to HS, on the fanning strip which leads to the back panel. The control should be powered externally with a 120 volt supply, attached to the EXTERNAL SOURCE terminals.
3. With the board out of the control, the same resistance can be used in series with a 120-volt ac supply, applied to the motor current sense terminals of the circuit board.
4. For either case, with the current applied, at least 1.5 volts should be measured. With the current removed, less than 0.4 volts should be measured. Failure to conform can involve any component in the motor current sense circuit.

CHECK NO. 5 - BANDWIDTH AND TIME DELAY CONTROLS

If no fault is found in any of the previous circuits, the bandwidth and time delay switches can be checked. As viewed from the back (component side), 13 terminals are readily visible on each switch. The terminal located at 11 o'clock is the center pole of the switch and is connected directly to ground.

1. Connect the multimeter to TP_0, set for DC volts of a scale to read up to 5.0 volts.
2. Each terminal on the switch should measure at least 3.0 volts, except the center pole and the terminal which corresponds to the present switch setting, which will read zero (0). As each switch is rotated through its settings, the "grounded" terminal should move accordingly. Note, on the bandwidth switch, that only 11 positions are actively used and that position 12 is connected together with position 11.
3. Failure to conform indicates a defective switch, or resistor packages RP_1, RP_2, RP_3, RP_4, or decoders IC_2 and IC_6.

CHECK NO. 6 - BAND EDGE LIGHT CIRCUITS

If the symptoms of the malfunction indicate the problem may be in the HIGH or LOW band edge lights, they may be checked as follows:

1. Set the control for 120.0 V setting and a 2 V bandwidth.
2. Apply 120.0 V ac to the EXTERNAL SOURCE terminals, place the power switch on EXTERNAL, and the AUTO/OFF/ MANUAL switch on AUTO.
3. Connect the multimeter toTP_0, set for dc volts of a scale to read up to 28 volts. Connect the positive meter lead to TP_{14}, and expect to measure approximately 28 V.
4. Now, slowly vary the applied voltage to below 119 V, and observe the LOW BAND indicator, expecting it to light. The voltage at TP_{14} should correspondingly drop to less than 1 V.
5. If the indicator does not light, but TP_{14} does go low, the problem is a defective LED DS_1, or resistor R_{23}. If TP_{14} does not go low, then the problem may be a defective IC_7.
6. Now, reconnect the multimeter to TP_{15} and expect to measure approximately 28 V.
7. Vary the applied voltage to above 121 V, and observe the HIGH BAND indicator, expecting it to light. The voltage at TP_{15} should correspondingly drop to less than 1 V.
8. If the indicator does not light, but TP1s does go low, the problem is a defective LED DS_2, or resistor R_{22}. If TP_{15} does not go low, then the problem may be a defective IC_7.

CHECK NO. 7 - RAISE AND LOWER RELAY CIRCUITS

If the symptoms of the malfunction indicate the problem may be in the RAISE or LOWER relays, they may be checked as follows:

1. Set the control for 120.0 V setting, 2 V bandwidth, and 10 second time delay.
2. Apply 120.0 V ac to the EXTERNAL SOURCE terminals, place the power switch. on EXTERNAL, and the AUTO/ OFF/MANUAL switch on AUTO.
3. Connect the multimeter to TP_0, set for dc volts of a scale to read up to 28 volts. Connect the positive meter lead to TP_9, and expect to measure approximately 28 volts.
4. Now, slowly vary the applied voltage to below 119 V. After the 10 second time delay period, the RAISE relay should close and the voltage at TP_9 should drop to less than 1 V. After 4 seconds, the relay will open and TP_9 will again measure 28 volts.
5. If the relay does not close (pronounced “click” should be heard), but TP_9 does go low, the problem is a defective RAISE relay coil. If TP_9 does not go low, then the problem may be a defective IC_7.
6. Now, reconnect the multimeter to TP_9 and expect to measure approximately 28 V.
7. Bring the applied voltage back into band and hold it in band for approximately 15 seconds. (This is to “clear” the memory on the relay retry feature.) Now, vary the voltage to above 121 V, and after the 10 second time delay period, the LOWER relay should close and the voltage at TP_9 should drop to less than 1 V. After 4 seconds, the relay will open and TP_9 will again measure 28 volts.
8. If the relay does not close (pronounced “click” should be heard), but TP_9 does go low, the problem is a defective LoWER relay coil. If TP_9 does not go low, then the problem may be a defective IC_7.
9. Now, remove the multimeter from TP_0 and TP_9, and set it to read ac volts up to 125 volts. Connect the meter to the terminal position labeled G (position 12) and LOWER (position 3) on the **output terminal strip** of the circuit board.
10. As the LOWER relay contacts close, approximately 120 V should be measured. The contacts remain closed, however, for only 4 seconds, and then open for 30 seconds before again closing.
11. If voltage is not measured when the contacts close, then the LOWER relay is defective. Note: Be certain the AUTO/OFF/ MANUAL switch is in the AUTO position.
12. Bring the applied voltage back into band and hold it in band for approximately 15 seconds. Now vary the voltage to just below 119V.
13. Connect the multimeter to the terminal position labeled G (position 12) and RAISE (position 5) on the **output terminal strip** of the circuit board.
14. As the RAISE relay contacts close, approximately 120 volts should be measured. The contacts remain closed, however, for only 4 seconds, and then open for 30 seconds before again closing.
15. If voltage is not measured when the contacts close, then the RAISE relay is defective. Note: Be certain the AUTO/OFF/ MANUAL switch is in the AUTO position.

CHECK NO. 8 - OPERATIONS COUNTER

If the symptoms of the malfunction indicate the problem may be in the operations counter, it may be checked as follows:

1. Set the control for 120.0 V setting, 2 V bandwidth, and 10 second time delay.
2. Apply 120.0 V ac to the EXTERNAL SOURCE terminals, place the power switch on EXTERNAL, and the AUTO/ OFF/MANUAL switch on AUTO.
3. Connect the muiltimeter to TP_0, set for dc volts of a scale to read up to 28 volts. Connect the positive meter lead to TP_{10}, and expect to measure approximately 28 volts.
4. **Momentarily** connect a 1000-ohm, 20-watt resistor from G to HS on the fanning strip which leads to the back panel. (This assumes the fanning strip is connected to the output-terminal strip of the circuit board.)
5. The voltage measured at TP_{10} should drop to less then 1 volt and the operations counter should partially increment as the resistor connection is maintained. When the connection is interrupted, TP_{10} should go high and the operations counter increment should complete.
6. If the counter does not increment, but TP_{10}, does go low, the problem is a defective operations counter. If TP_{10} does not go low, then the problem may be a defective IC_7.

CHECK NO. 9 - WATCHDOG CIRCUIT

If the control appears completely dead and voltage measurements external to the circuit board indicate that a voltage source is being delivered to the board, a problem could be occurring in the watchdog circuitry. This is checked by connecting an oscilloscope between TP_0 and TP_{12}, while the circuit board is energized. A pulse train of approximately 5 V amplitude, occurring at least every 150 milliseconds, should be observed. Now connect the oscilloscope probe to TP_{11} and a dc voltage of at least 3.0 volts should be measured. If the pulse train is not present, or TP_{11} is not above 3.0 volts, then either the microprocessor (ICI) or watchdog (IC_5) are defective. Further analysis requires disconnecting or isolating the two components as the loading effects from one device can affect the other device.

No attempt should be made to further analyze these problems or to replace IC_1. Contact Cooper Power Systems service for board exchange.

CIRCUIT BOARD REMOVAL

The printed circuit board can be physically removed from the control and yet remain electrically connected for test purposes. To keep the printed circuit board electrically connected to the control, follow the numbered steps, but DO NOT disconnect the fanning terminal strip as described in Step No. 1.

1. Loosen the screws on the interconnecting terminal strip on the printed circuit board to drop the fanning strip clear.
2. Remove the counter quick disconnects.
3. Loosen the locking strips on the bandwidth knob and the time-delay knob and turn them until they clear the knobs.
4. Remove the time-delay knob.
5. Remove the bandwidth knob.
6. Remove the panel nuts from the bushings that are located under the knobs.
7. Loosen the two side screws that are engaged in slots at the bottom of the board frame to allow free movement of the printed circuit board.
8. Swing the top of the board away from the front panel until the control shafts are clear. Lift the board free of the slots in the side brackets (Figure 4-4).

The replacement of the printed circuit board is accomplished by following the above steps in the reverse order. To correctly orient the knobs, observe the flattened shaft and corresponding knob cavity.

By leaving the fanning strip attached to the printed circuit board removed from the control, it is possible to thoroughly test the entire control assembly. The fanning strip concept provides reliable screw-down-type terminals for rapid removal and replacement.

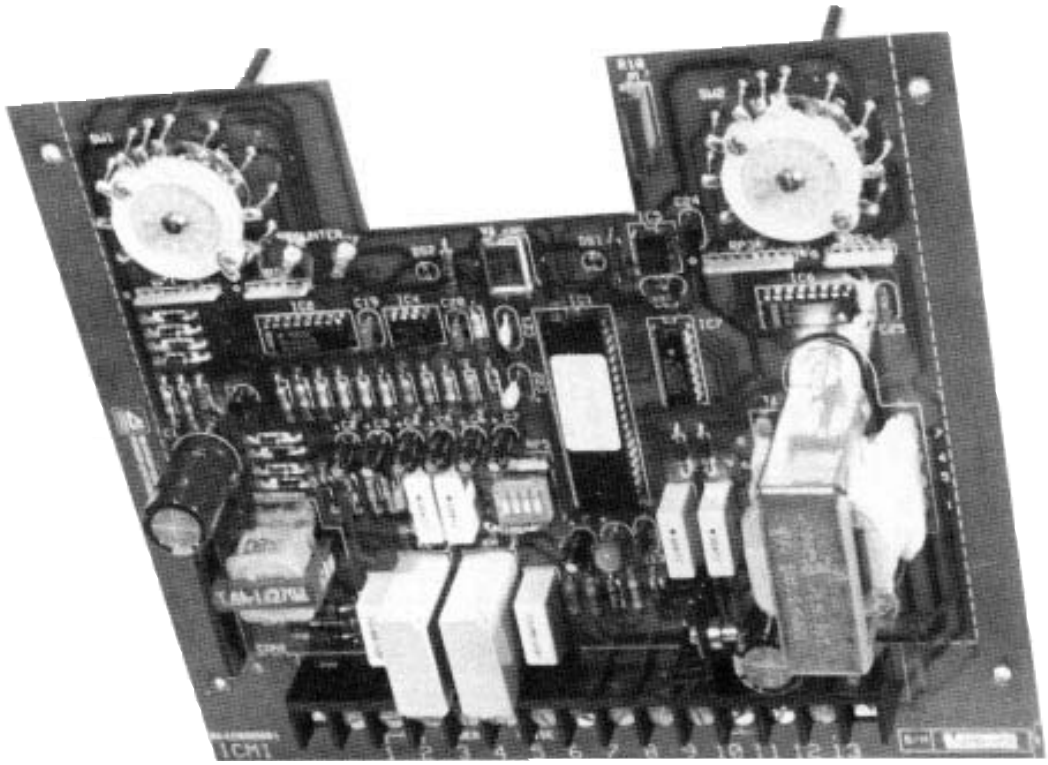

Figure 4-4.
Printed circuit board removed.

ACCESSORIES - Section 5

The following accessories are available for use with the regulator control to perform various functions. They can be mounted in the same enclosure as the control; however, if a number of them are used, a second enclosure is required. Most can be either installed at the factory or retrofit in the field by the customer. Those that can be retrofit are listed in the spare parts section.

Heater Assembly

The thermostatically controlled heater assembly is best used in high-humidity areas. The heater assembly shown in Figure 5-1 is located in the lower-left corner of the rear panel.

The heater can be manually turned on or off by means of the toggle switch located on the heater assembly. In the ON position the thermostat in the heater assembly will turn the heater on when the temperature falls below 85˚F. The thermostat turns the heater off when the temperature exceeds 100˚F. For full details refer to *S225- 10-1 Supplement 2.*

Figure 5-1.
Heater.

Voltage Reduction Control

The voltage reduction control accessory (Figure 5-2) can provide system load management through its ability to trigger the regulator to reduce voltage. Its application is ideal in situations where power demands surpass available capacity and where there are extraordinary peak loads.

The voltage reduction control provides three reduction levels: 2-1/2%, 5%, and 7-1/2% of regulated voltage level. Any one of these three levels can be manually selected by turning the single control on the panel to the desired percent reduction. The reduction steps are provided by an autotransformer.

Through the use of plug-in relays and appropriate percentage connections to the rear terminal strip, any of these three reduction levels can be selected via remote activation signal. Many standard relay coil voltage selections - ac or dc - are available to match the relay to the remote control system. For full details refer to *S225-10-1 Supplement 3.*

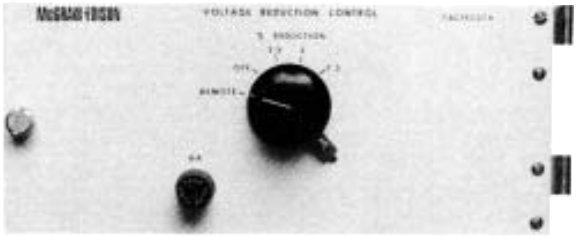

Figure 5-2.
Voltage reduction control.

Voltage Limiter

The voltage limiter accessory (Figure 5-3) permits a regulator's maximum and minimum output to be selected, protecting the consumer from abnormally high or low voltages resulting from:

1. Defective functioning of the regulator control panel.
2. Abnormal loading of the feeder.
3. Inaccurate regulator control settings (voltage level, bandwidth, line drop compensations, etc).
4. Heavy loading by the first customer while there is a leading power factor on the feeder.
5. Light loading at the first customer with heavy loading on the feeder at the same time.

The lower-limit control can be disabled without influencing the upper-limit control. Turning the upper-limit control off, however, disables both controls. With both controls turned off, power may be applied to the voltage limiter's external test terminals for operational checks. The range of the lower-limit setting is 105 to 120 volts; the range of the upper-limit setting is 120 to 135 volts.

The raise or lower motor circuit of the regulator is interrupted when a set voltage limit is exceeded. This interruption provides total override of the main control. For full details refer to S225-*10-1 Supplement* 4.

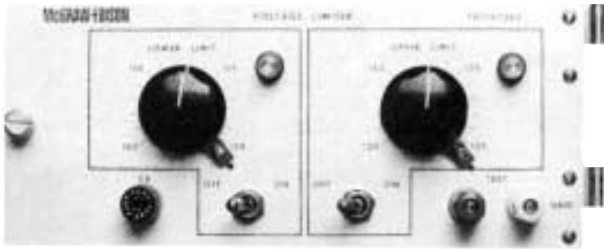

Figure 5-3.
Voltage limiter.

Auxiliary Current Transformer

The auxiliary current transformer (Figure 5-4) steps up the 0.2ampere control current supply to a usable 2.5-ampere or 5.0ampere source for special metering purposes. The two jumpers on the terminal strip on the rear of the accessory panel determine the current available from the auxiliary current transformer.

The auxiliary current transformer has an accuracy of ± 1% with 25-VA burden at a 70% power factor. The secondary of the transformer must be short circuited - using the short-circuiting block provided - when a metering device is not connected to the secondary. For full details refer to *S225-10-1 Supplement 5.*

Meter Pac

The Meter Pac (Figure 5-5) is an instrumentation package designed for installation on single-phase voltage regulators. It is specifically designed for installation on Cooper Power Systems CL-1, CL-2, or CL-2A control panels. However, the Meter Pac can be installed on any device since it only requires a standard 1 20 VAC input, and a current input from a C.T. with a 0-0.2 ampere output.

The Meter Pac has an accuracy of ± 0.5% for the voltage range, an accuracy of + 0.6% for the current range, and accuracy of ± 3.0% for kW, kVA, and kVAR ranges, and an accuracy of ± 5.O% for harmonics.

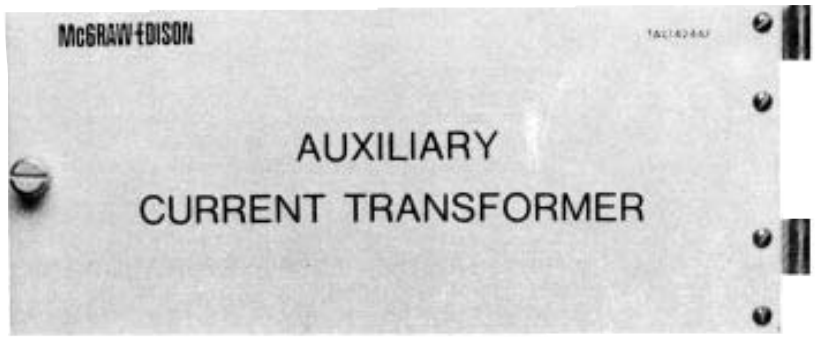

Figure 5-4.
Auxilliary current transformer.

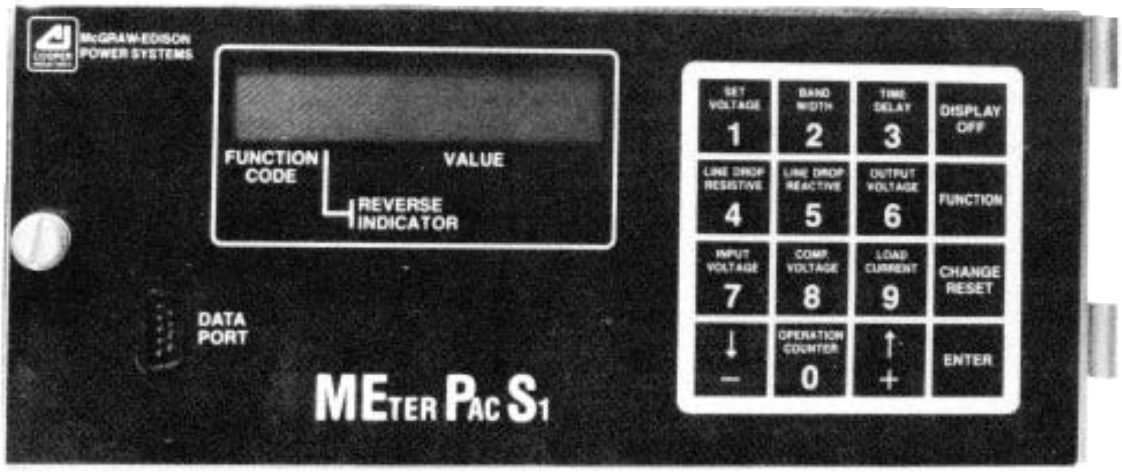

Figure 5-5.
Meter Pac.

DATA READER

The optional hand-held DATA READER allows the operator to copy all of the Function Code parameters from the Meter Pac for transfer to a personal computer. operation of the control is not affected by the DATA READER.

The DATA READER can store data from 100 different Meter Pac Controls before the memory must be purged.

Data Reader and Software Kit

The Data Reader and Soflware Kit includes the Data Reader, the Data Reader to control cable, the Data Reader to PC cable, and the Data Reader software. The non copy-protected software operates on an IBM-type personal computer with DOS 2.0 or higher operating system. The software allows the operator to perform the following functions:

1. Upload the data from the Data Reader to the software data base.
2. Erase the Data Reader memory.
3. Scan the data on the CRT.
4. Print reports.
5. Transfer data to another data base.

Data Reader Assembly

The Data Reader Assembly consists of the Data Reader and the Data Reader to control cable.

Figure 5-6.
Data Reader and Software Kit.

FAN COOLING ACCESSORY

Voltage regulators 250 kVA and larger can be equipped with fan cooling (Figure 5-7). Fan cooling increases the load capacity of the regulator by 25%. Special requirements are necessary on regulators using fan cooling, therefore the regulator must be ordered with fan cooling or with provisions for adding fan cooling. Mounting cooling fans flush to the plate-type radiator is accomplished by using T-bolts that secure the cooling fan to the bank of radiators.

The automatic operation of the fan is controlled by a thermometor having a thermal switch that will cycle the fan on or off when the top-oil temperature reaches predetermined temperature limits. The thermal switch has an upper limit adjustable from 80°C to 110°C. The differential from make to break is 6°c to 10°C. The thermal switch, when temperature activated or deactivated, signals a relay which turns the fan on or off. For full details, refer to *5225-10-1 Supplement 8.*

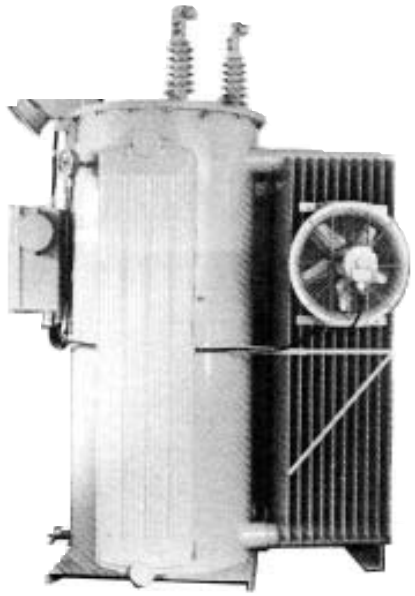

Figure 5-7.
Fan Cooling accessory.

SPARE PARTS • Section 6

When ordering replacement parts or field-installable accessories for your Cooper Power Systems VR-32 step-voltage regulator, provide the following information:

1. Regulator serial number (found on control nameplate).
2. Quantity of each part required.
3. Part code number of each part (as shown in Table 6-1).
4. Description of each part (as shown in Table 6-1).

Additional parts and installation information for tap changers is found in bulletin *S225-10-2.*

Table 6-1
Spare Parts

Description	Part Code No	Reference Figure
• Bypass series arrester (with mounting hardware)	5004	Figure 1-2
• Complete bushing assembly (indicate if for S, L, or SL application)		
Dry-type (95 kV BIL and below)	+	Figure 6-1
Oil-filled (150 kV BIL and above) (Note oil-filled bushings available only as complete assembly)	+	(not shown)
• Dry-type bushing components		
Terminal cap	+	Figure 6-1
Terminal cap gasket	+	Figure 6-1
Porcelain	+	Figure 6-1
Bushing/tank gasket	+	Figure 6-1
Clamp w/bolts	+	Figure 6-1
Clamp spring	+	Figure 6-1
• Position indicator (complete)	4000	Figure 1-8
• Position indicator glass cover	4001	Figure 1-8
• Position indicator external drive cable (not used on regulators without junction box)	4004	(not shown)
• Position indicator internal drive cable (provide total length of old cable in inches)	+	(not shown)
• 928D and 170C Spring-drive tap changer parts		
Replacement motor kit A (with sprocket and pin)	3014	Figure 6-2
Main movable contact right hand*	3007	Figure 6-2
Main movable contact left hand**	3006	Figure 6-2
Main stationary contact	3002	Figure 6-2
Reversing stationary contact right hand**	3004	Figure 6-2
Reversing stationary contact left hand**	3003	Figure 6-2
Reversing movable contact—928D	3022	Figure 6-2
Reversing movable contact—170C	3005	Figure 6-2
• 770B Direct-drive tap changer parts		
Replacement motor kit A. (use old shield)	3031	Figure 6-4
Replacement motor shield	3068	Figure 6-3
Main or reversing movable contact	3059	Figure 6-3
Main stationary contact	30s3	Figure 6-3
Reversing stationary contact	3067	Figure 6-3
Reversing stationary neutral contact (non-arcing)	3057	Figure 6-3

Description	Part Code No.	Reterence Figure
• 66OC Direct-drive tap changer parts		
Replacement motor kit A.	3031	Figure 6-4
Main movable contact	3029	Figure 6-4
Main stationary contact	3023	Figure 6-4
Reversing stationary contact	3037	Figure 6-4
Reversing stationary neutral contact (non-arcing)	3027	Figure 6-4
Reversing movable contact	3036	Figure 6-4
• CL control parts		
Complete CL-2A control (includes 6500, back panel, cabinet, no cable)	6070	(not shown)
CL-2A front panel only (includes all operational electronics of control)	6030	Figure 2-1
CL-2A printed Circuit board	6063	
Neutral light bulb	6051	Figure 2-1
Motor fuse (6A) (pack of 5)	6047	Figure 2-1
Panel fuse (2A) (pack of 5)	6048	Figure 2-1
CR relay and terminal strip	6071	Figure 5-2
• Control cable***		
15’ for remote mounting	6104	(not shown)
20’ for remote mounting	6105	(not shown)
25’ for remote mounting	6106	(not shown)
30’ for remote mounting	6107	(not shown)
	•	
• Field-installable accessories		
See page 5-1 for further information.		
Control cabinet heater	9000	Figure 5-1
Fan cooling	9005	Figure 5-5
Auxiliary control cabinet and hardware	9050	(not shown)
Voltage Reduction Control	9040	Figure 5-2
Voltage Limiter	9065	Figure 5-3
Meter Pac	9075	Figure 5-5
Auxiliary Current Transformer	9055	Figure 5-4
• Accessories for data extraction.		
Data Reader & Software Kit	9076	Figure 5-2
Data Reader Assembly	9977	(not shown)

*Motor Kits include motor, capacitor and hardware.
**When contact viewed from motor-side of tap changer.
***Current design has 10 conductors. 12 conductor cables with required terminations are available for obsolete designs or to mount CL-4C on previous designs. Contact factory service department for details.
+ See parts manual or contact factory service department.
• other lengths available. Contact factory service department.

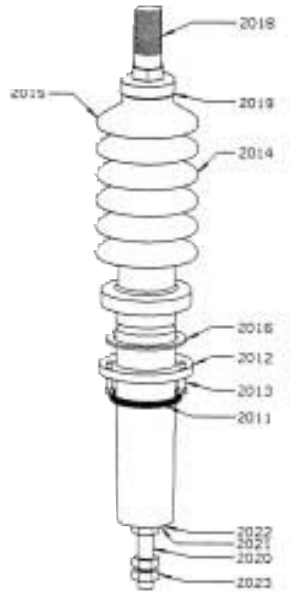

BUSHING

PART NO.	DESCRIPTION
2015	COMPLETE BUSHING ASSEMBLY W/ HARDWARE
2014	BUSHING (PORCELAIN)
2018	TERMINAL CAP
2020	ROD ASSEMBLY
2019	GASKET
2016	GASKET
2021	CONICAL SPRING WASHER
2023	HEX JAM NUT
2011	SPRING
2012	CLAMP RING
2013	SPECIAL BOLT
2022	PLAIN WASHER

Figure 6-1.
High-voltage bushing.

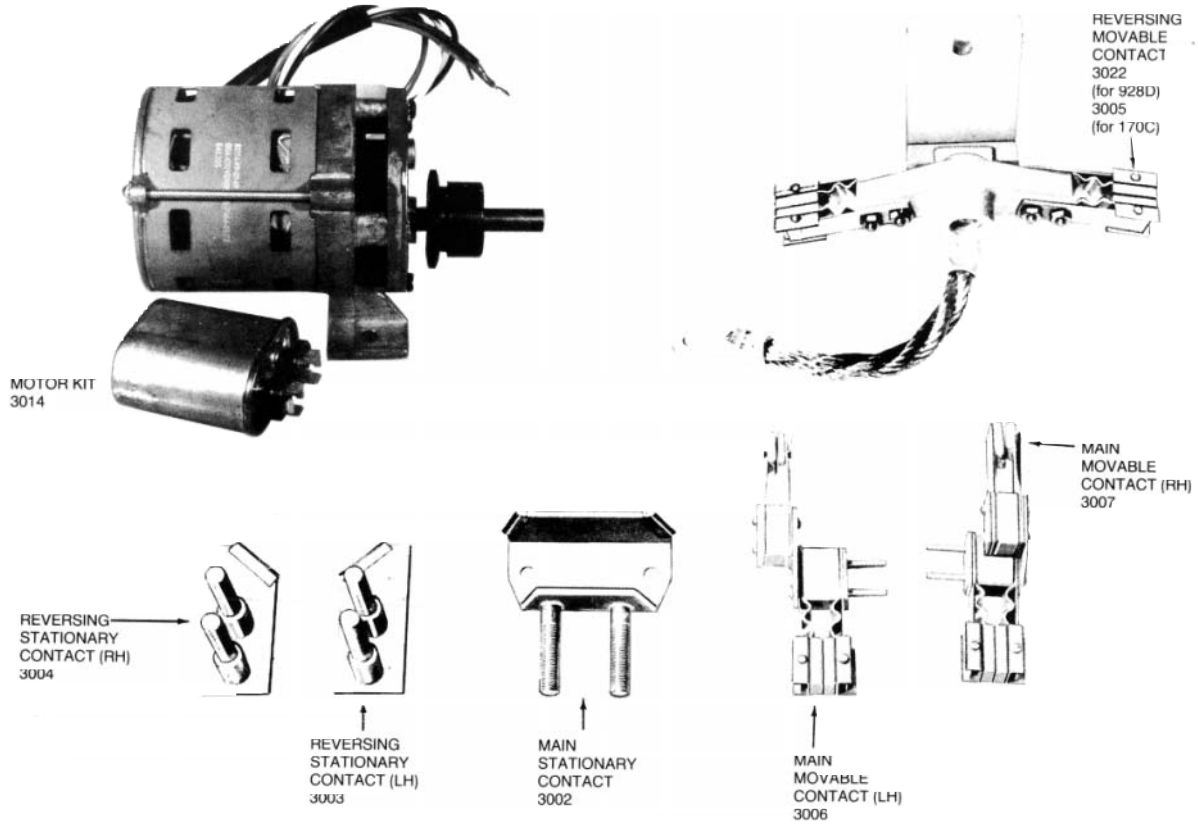

Figure 6-2.
Replacement parts for spring-drive tap changers 928D and 170C.

Figure 6-3
Replacement parts for direct-drive tap changer 770B.

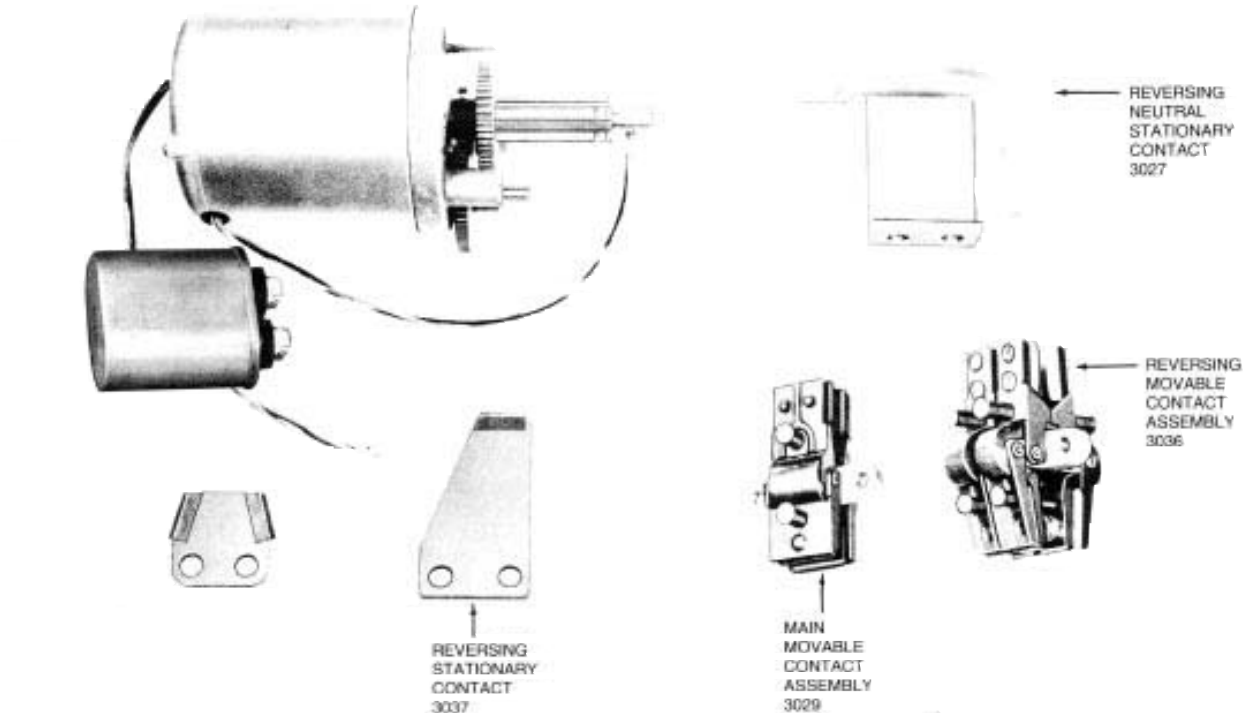

Figure 6-4
Replacement for direct-drive tap changer 660C.

APPENDIX • Section 7

SERIAL NUMBERS Serial numbers for Cooper Power System's regulators are coded in the following manner:

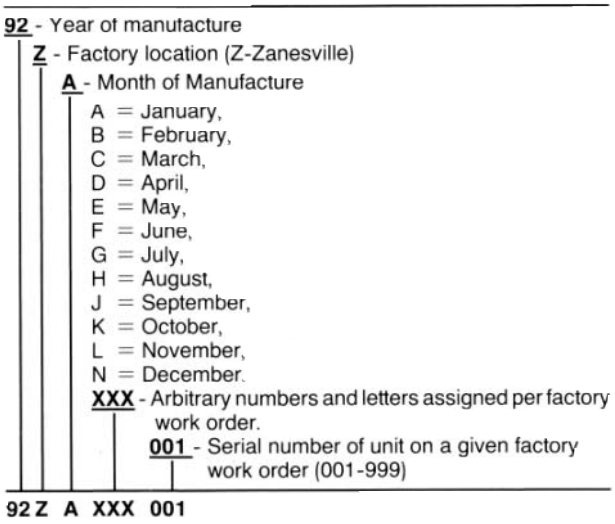

LIST OF TABLES

The following is a list of all tables found in this document and the page on which they are located.

Table Number	Table Title	Page Number
1-1	Shunt Arrester Application Data.	1-8
1-2	ADD-AMP Capabilities.	1-9
2-1	VR-32 Tap Connections and Voltage Levels.	2-7
2-2	Current Transformer Applications.	2-9
3-1	Tap Changer Model Application Chart.	3-1
4-1	Power Supply Voltages at Test Points.	4-9
6-1	Spare parts.	6-1

LIST OF SCHEMATIC DIAGRAMS

Figure	Description	Page
1-4	Typical Connection Diagrams	1-4
1-9	Power Circuit - Series Winding Located on the Source Side	1-13
1-10	Power Circuit - Series Winding Located on the Load Side	1-11
1-11	Power Circuit - Series Transformer	1-11
1-13	Internal Wiring of Spring-Drive Regulator with Series Winding Located on the Source Side	1-12
1-14	Internal Wiring of Direct-Drive Regulator with Series Winding Located on the Load Side	1-13
1-15	Internal Wiring of Regulator with Series Winding on the Input Side, with Differential Potential Transformer	1-14
1-16	Internal Wiring of Regulator with Load Winding on the output Side, with Differential Potential Transformer	1-15
1-17	Back Panel Signal Circuit	1-16
2-2	Dipswitch Location on Printed Circuit Board	2-3
2-3	VR-32 Regulator and CL-2A Control Wiring Schematic Diagram	2-5
2-7	SCADA Connections to CL-2A Control	2-11
2-8	SCADA Connections Basic Scheme	2-12
2-9	Typical User Provided Voltage Reduction Module	2-12
2-10	8 - Conductor Cable	2-13
2-11	9 - Conductor Cable	2-13
2-12	10 - Conductor Cable	2-13
4-1	Junction Box Wiring Diagram	4-1
4-2	Physical Wiring	4-5
4-3	Printed Circuit Board Schematic	4-7

Cooper Power Systems

Quality from
Cooper Industries

Cooper Power Systems, Inc.
is a registered trademark of Cooper Industries, Inc.

P.O. Box 2850, Pittsburgh, PA, 15230

COOPER Power Systems

Voltage Regulators

CL-6 Series Control Installation, Operation, and Maintenance Instructions

Service Information
S225-11-1

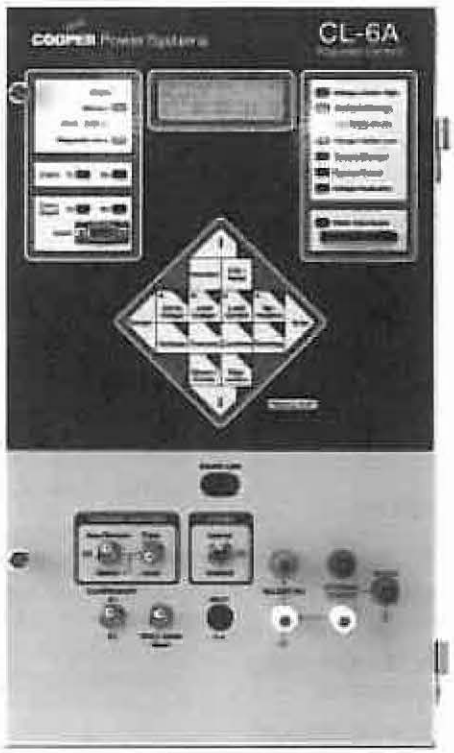

Figure 1-1.
CL-6A Control.

Table of Contents

Safety Information ii
Product Information v
Introduction v
Acceptance and Initial Inspection v
Handling and Storage v
Standards v
Quality Standards v
Description v
Section 1: Control Front Panel **1:1**
Lower Panel 1:1
Power Switch 1:1
External Source Terminals 1:1
Control Function Switch 1:1
Supervisory Switch 1:1
Drag-Hand Reset Switch 1:1
Neutral Light 1:1
Voltmeter Terminals 1:1
Fuse 1:1
Upper Panel 1:2
Display 1:2
Keypad 1:2
Table of Contents, cont. iii

SAFETY FOR LIFE

Cooper Power Systems products meet or exceed all applicable industry standards relating to product safety. We actively promote safe practices in the use and maintenance of our products through our service literature, instructional training programs, and the continuous efforts of all Cooper Power Systems employees involved in product design, manufacture, marketing, and service.

We strongly urge that you always follow all locally approved safety procedures and safety instructions when working around high voltage lines and equipment and support our "Safety For Life" mission.

SAFETY INFORMATION

The instructions in this manual are not intended as a substitute for proper training or adequate experience in the safe operation of the equipment described. Only competent technicians, who are familiar with this equipment should install, operate, and service it.

A competent technician has these qualifications:

- *Is thoroughly familiar with these instructions.*
- *Is trained in industry-accepted high- and low-voltage safe operating practices and procedures.*
- *Is trained and authorized to energize, de-energize, clear, and ground power distribution equipment.*
- *Is trained in the care and use of protective equipment such as flash clothing, safety glasses, face shield, hard hat, rubber gloves, hotstick, etc.*

Following is important safety information. For safe installation and operation of this equipment, be sure to read and understand all cautions and warnings.

Hazard Statement Definitions

This manual may contain four types of hazard statements:

DANGER: Indicates an imminently hazardous situation which, if not avoided, will result in death or serious injury.

WARNING: Indicates a potentially hazardous situation which, if not avoided, could result in death or serious injury.

CAUTION: Indicates a potentially hazardous situation which, if not avoided, may result in minor or moderate injury.

CAUTION: Indicates a potentially hazardous situation which, if not avoided, may result in equipment damage only.

Safety Instructions

Following are general caution and warning statements that apply to this equipment. Additional statements, related to specific tasks and procedures, are located throughout the manual.

DANGER: Hazardous voltage. Contact with hazardous voltage will cause death or severe personal injury. Follow all locally approved safety procedures when working **around** high and low voltage lines and equipment. G103.3

WARNING: Before installing, operating, maintaining, or testing this equipment, carefully read and understand the contents of this manual. Improper operation, handling or maintenance can result in death, severe personal injury, and **equipment** damage. G101.0

WARNING: This equipment is not intended to protect human life. Follow all locally approved procedures and safety practices when installing or operating this equipment. Failure to comply can result in death, severe personal injury and equipment damage. G102.1

WARNING: Power distribution equipment must be properly selected for the intended application. It must be installed and serviced by competent personnel who have been trained and understand proper safety procedures. These instructions are written for such personnel and are not a substitute for adequate training and experience in safety procedures. Failure to properly select, install or maintain power distribution equipment can result in death, severe personal injury, and equipment damage. G122.2

Section 1: Control Front Panel, cont.

Alarm Indicators 1:4
Communications 1:4
Status Indicators 1:4
Flash Card Port 1:4

Section 2: Control Installation 2:1
Mounting the Control 2:1
Placing the Control into Service 2:1
Setting the Control for Service 2:1
Operational Check 2:2
Field Calibration Check 2:3
Removal from Service 2:3
Determining Neutral Position 2:3
Return the Regulator to Neutral 2:3
Removal of the Control 2:4
Replacement of the Control 2:4

Section 3: Initial Control Programming 3:1
Basic Programming 3:1
Programming and Reconfiguring for Different Voltage Systems 3:3
Allowable System Voltages and Calculations of Overall PT Ratio 3:4
Determination of Leading or Lagging in Delta-Connected Regulators 3:6

Section 4: Control Operation 4:1
Automatic Operation 4:1
Manual Operation 4:1
Self-Diagnostics 4:1
Security System 4:2
Basic Control Operations 4:3
Set Voltage 4:3
Bandwidth 4:3
Time Delay 4:3
Line Compensation, Resistance, and Reactance Settings 4:3
Regulator Configuration 4:3
Control Operating Modes 4:3
System Line Voltage 4:4
Potential Transformer Ratio 4:4
Current Transformer Primary Ratio 4:4
Delta-Connected (Line-to-Line Connected) Regulators 4:4

Section 5: Control Programming 5:1
Quik-Start™ Set-Up 5:1
Function Menu 5:3
Function Codes 5:8
Special Functions 5:40
Alarms 5:40
Events 5:42
Power-Up/Reset Conditions 5:42
Indication Messages 5:43
System Messages 5:44
Metering-PLUS™ Formats 5:45

Section 6: Control Features 6:1
Calendar/Clock 6:1
Metering 6:1
Instantaneous Metering 6:1
Demand Metering 6:1
Demand Task Operation 6:1
Tap Position Indication 6:2

Section 6: Control Features, cont.

Source-Side Voltage ... 6:2
Differential Voltage ... 6:2
External Source Voltage ... 6:2
Source-Side Voltage Calculation ... 6:2
Reverse Power Operation ... 6:3
Locked Forward Mode ... 6:3
Locked Reverse Mode ... 6:3
Reverse Idle Mode ... 6:4
Bidirectional Mode ... 6:5
Neutral Idle Mode ... 6:5
Cogeneration Mode ... 6:6
Reactive Bidirectional Mode ... 6:7
Voltage Limiting ... 6:7
Voltage Reduction ... 6:8
Local/Digital Remote Mode ... 6:8
SOFT-ADD-AMP™ Feature ... 6:8
Supervisory Control and Data Acquisition (SCADA) ... 6:8
Data Retrieval and Settings Uploading ... 6:8
Digital SCADA ... 6:8
Analog SCADA ... 6:9
Tap-to-Neutral ... 6:10
Remote Motor Control and Auto Inhibit ... 6:11
Transducer Connections ... 6:12
Fooler Voltage Scheme ... 6:12

Section 7: Advanced Features ... 7:1
Metering-PLUS Feature ... 7:1
Compact Flashcard ... 7:4
Communications ... 7:6
Protocols ... 7:7
Programmable Input and Output ... 7:7
Alarms ... 7:10
Events ... 7:10
Profiling ... 7:11
Histograms ... 7:11
TIME-ON-TAP™ function ... 7:12
PMT™ Preventive Maintenance Tapping ... 7:12
Duty Cycle Monitor ... 7:12

Section 8: Troubleshooting ... 8:1
External Check ... 8:1
Defining the Problem ... 8:1
Control Panel Troubleshooting ... 8:1
Tap-Changer Operation Troubleshooting ... 8:3
Metering Troubleshooting ... 8:5
Control Calibration ... 8:5

Section 9: Accessories ... 9:1
Communications ... 9:1
Heater Assembly ... 9:1

Section 10: Appendix ... 10:1
VR-32 Tap Connections and Voltage Levels ... 10:1
ADD-AMP™ Capabilities ... 10:2
Junction Box Wiring Diagram ... 10:3
Wiring Diagram for Type B VR-32 Regulator and CL-6 Control with Differential PT ... 10:4
Typical Internal Wiring of Regulator with Quik-Drive™ Tap-Changer ... 10:6
Back Panel Signal Circuit ... 10:7

PRODUCT INFORMATION

Introduction

Service Information S225-11-1 provides the installation, operation, and maintenance instructions for the CL-6 Series Control for Cooper Power Systems voltage regulators. Refer to *Service Information S225-10-10* for installation and operation information on the Cooper Power Systems Voltage Regulator.

Read This Manual First

Read and understand the contents of this manual and follow all locally approved procedures and safety practices before installing or operating this equipment. Read and understand the manual detailing the installation and operation of the regulator used with this control.

Additional Information

These instructions cannot cover all details or variations in the equipment, procedures, or process described nor provide directions for meeting every possible contingency during installation, operation, or maintenance. For additional information, please contact your Cooper Power Systems representative.

Acceptance and Initial Inspection

This product is completely assembled, tested, and inspected at the factory. It is carefully calibrated, adjusted, and in good condition when accepted by the carrier for shipment.

Upon receipt, inspect the carton for signs of damage. Unpack the control and inspect it thoroughly for damage incurred during shipment. If damage is discovered, file a claim with the carrier immediately.

Handling and Storage

Be careful during handling and storage of equipment to minimize the possibility of damage.

Standards

Cooper Power System regulators are designed and tested in accordance with the following standards:

IEEE Standard C37.90.1-2002™

IEEE Standard C37.90.2-1995™

IEEE Standard C57.13-1993™

IEEE Standard C57.15-1999™

IEEE Standard C57.91-1995™

IEEE Standard C57.131-1995™

EN 50081-2

EN 61000-4

IEC 60068-2

IEC 60214-1

IEC 610255-5

Quality Standards

The Quality System at the Cooper Power Systems, Badger Drive Assembly plant, is certified to the ISO 9001 standard.

Description

The reliable Cooper CL-6 control incorporates the latest in digital technology to provide accurate, rapid, and dependable control of a step-voltage regulator. Utilizing surface-mount technology and low-power electronics, the CL-6 control is *CE* (Commonwealth Europe) compliant. The nameplate located on the control box defines the power circuit.

The CL-6 allows keypad programming, Metering-PLUS™ status inquiries, flashcard uploading and downloading, and multiple communication ports with user-selectable DNP3 or 2179 protocol. LED indicators provide instant information on alarm, communications, and regulation condition status. A four-line display provides more detailed information and further simplifies programming. In addition, the CL-6 control is highly configurable and ready for use in applications where either digital or analog supervisory control and data acquisition (SCADA) is required.

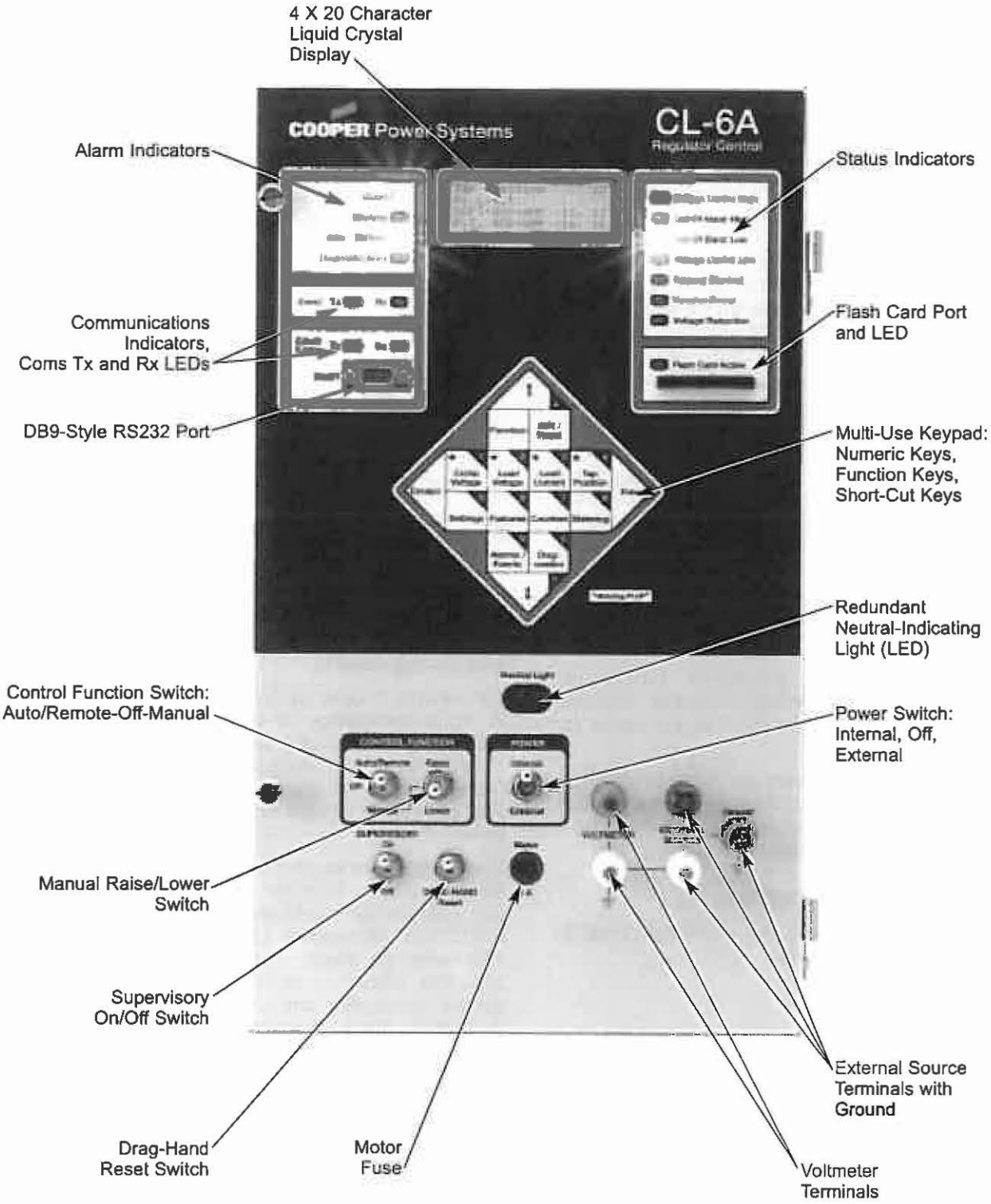

Figure 1-2.
Control panel layout.

SECTION 1: CONTROL FRONT PANEL

Lower Panel (Grey)

The lower section of the control contains components which are similar to the controls in the Cooper CL series. Refer to Figure 1-2.

Power Switch

In the external position, the control and tap-changer motor are powered from an external source connected to the external source terminals (120 Vac standard, 240 Vac as indicated by decal). In the internal position, the control and motor are powered from the regulator. In the off position, no power is delivered to either the control or the motor.

CAUTION: Equipment damage. Be mindful of polarity when using an external source. Polarity reversal will result in control damage. VR-T201.0

External Source Terminals

Providing 120 Vac to these terminals powers the control and tap-changer motor. Controls wired for an external source of 220–240 Vac have a decal specifying "240" at the terminals. Caution should be taken when connecting external voltage to the terminal(s). The voltage should be checked to insure the polarity is correct. The black terminal is the hot terminal, the white is the neutral terminal, and the green, which is directly connected to the chassis, is the external supply ground.

Control Function Switch

In the auto/remote position, the tap-changer motor can be controlled by either the front panel (auto) or remotely by SCADA. In the off position, manual and automatic operation and remote motor control are inhibited. In the manual position, automatic operation and remote motor control are inhibited and the tap-changer may be raised or lowered locally by momentarily toggling the raise/lower switch.

Manual (Raise/Lower) Switch

This switch allows the operator to manually raise or lower the tap-changer motor when the control switch is set to **Manual**.

Supervisory Switch

This switch is used for digital communications only. When set to **On**, SCADA has full capabilities. When set to **Off**, SCADA may only read the control database.

Drag-Hand Reset Switch

This switch operates a solenoid in the Position Indicator to move the drag hands to the present tap position.

Neutral Light

This is the primary indication that the tap-changer is in the neutral position. See the **Control Installation: Determining Neutral Position** section of this manual.

Voltmeter Terminals

These allow the connection of a voltmeter to measure the potential sensed by the control [between the load (L) bushing and the source load (SL) bushing of the regulator]. There are two terminals: a red terminal and a white terminal.

Fuse

The motor fuse is a 6 A, slow-blow fuse.

Upper Panel (Black)

Display

The display is a back-lit LCD that will display information in four lines of twenty characters and in four different languages: English, French, Portuguese, and Spanish. See Figure 1-3.

Figure 1-3.
Main Menu, Forward Direction, and Metering-PLUS Tap Position screens.

Utilizing a 3-level, nested menu structure, items are structured in levels one and two and parameters are in level three. The main menu is the default display; refer to Table 5-2 for the complete nested menu. When a menu is displayed, the current menu item is indicated by a cursor on the display screen. Parameter values appear on the LCD, right justified, with a decimal point shown as necessary.

Note: Only four line items appear on the display at one time. Moving the cursor down from the fourth line will shift the line items up one item at a time.

The LCD display panel contrast is adjustable. Press and hold the Function key, then press the scroll up arrow key to increase or the scroll down arrow key to decrease contrast.

Keypad

The front panel interface for the CL-6 control uses a 16-key touchpad laid out in a diamond pattern. Refer to Figure 1-4. The keypad allows for three modes of interface with the three levels of nested menu structure: numeric keys, short-cut keys, and scroll keys.

Numeric Keys

To use the keypad as a numeric keypad to enter function codes (FC) or parameter values, press the **Function** or **Edit/Reset** keys. When the numeric keying is complete, press **Enter**.

Use function codes to quickly program and read Level 3 parameters. To display a parameter on the LCD via a function code (FC), press **Function**, key in the function code (FC) number, then press **Enter**. For security, certain parameters, as noted in Table 4-1, can only be accessed via the function code method. Also, certain parameters and data, such as alarms, custom logic, histograms, and Profiler data, can only be accessed via the interface software.

See Table 5-2 for a list of the functions grouped by menu level and Table 5-3 for a numerical listing of function codes.

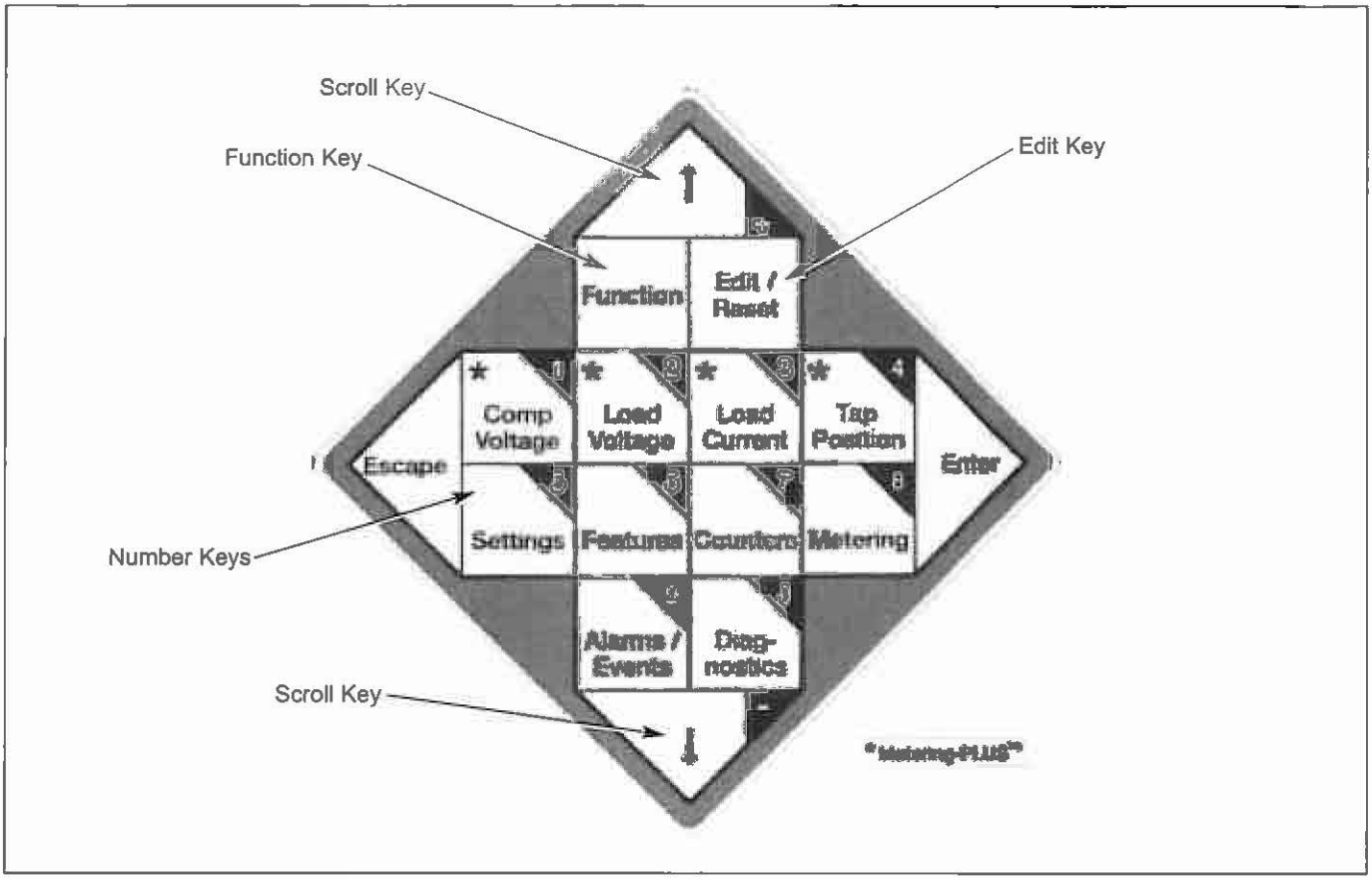

Figure **1-4.**
Fully **numeric, scrollable keypad with Metering-PLUS.**

Short-Cut Keys

There are two types of short-cut keys which access specific locations within the nested menu structure. Keys ***1**–***4** support the Metering-PLUS feature which provides, with one touch, commonly requested diagnostic data; see Figures 1:3 and 1:4. Keys **5–9** and **0** support Level 1 menu items; press keys **5–9** and **0** and the associated Level 2 menu items will display in the LCD.

The Metering-PLUS data includes Compensated Voltage, Load Voltage, Load Current, and Tap Position; refer to the **Advanced Features: Metering-PLUS** section of this manual for more information.

The Level 1 menu items include Settings, Features, Counters, Metering, Alarms/Events (occurrences), and Diagnostics.

Scroll Keys

Use the scrolling arrows to move the cursor between items within a menu level location. For example, within the Level 2 submenu for Metering, the arrows will scroll the cursor through Instantaneous, Forward Demand, Reverse Demand, and Master Reset, and then return to Instantaneous.

The **Enter** and **Escape** keys are used to enter the menu structure or move between menu levels. **Enter** is used to access submenus. **Escape** is used to step back or exit submenus. Repeated pressing of the Escape key will return the display screen to the level one main menu. (A deeply nested level location necessitates a greater number of depressions.)

Note: Only four line items appear on the display at one time. Moving the cursor down from the fourth line will shift the line items up one item at a time.

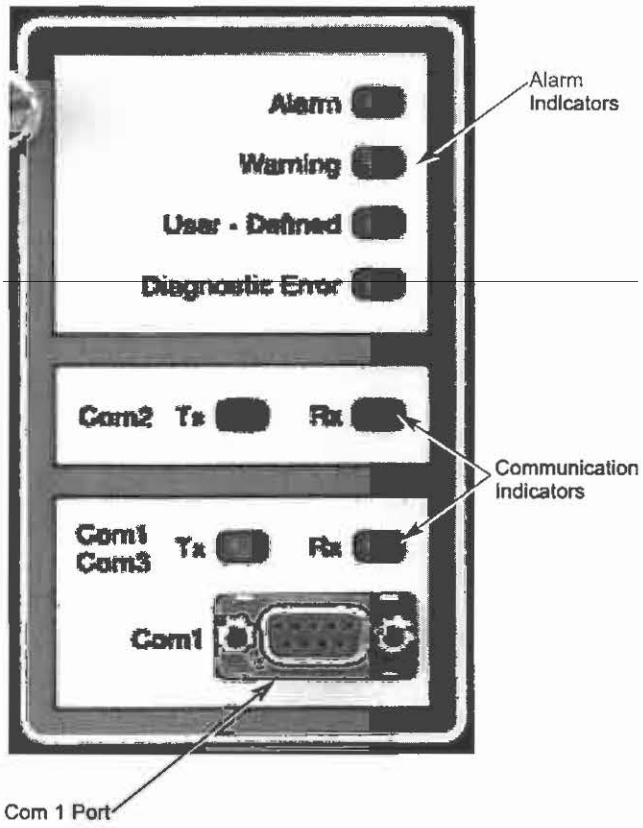

Figure 1-5.
Alarm and communication indicators and Com 1 Port.

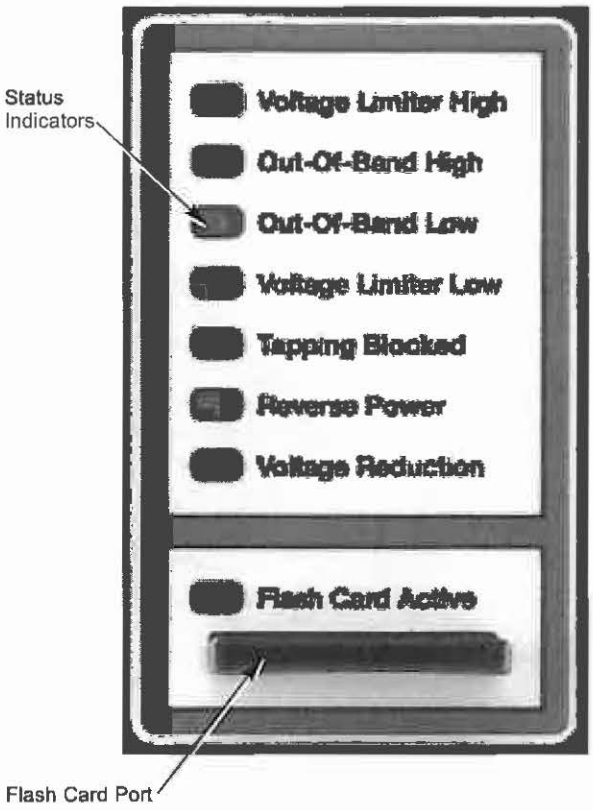

Figure 1-6.
Status indicators and flash card port.

Alarm Indicators

These LEDs indicate an Alarm or Warning, a user-defined condition, or a diagnostic error. See Figure 1-5.

Communications

Communication Indicators

These LEDs give the ability to see that transmit and receive messages are active when the transfer of information is taking place. See Figure 1-5.

Communication Port 1

Com 1 Port is an RS232 (DCE) port that interfaces local communication between the control and a PC using a standard DB9-style RS232 cable. A null modem is not required. See Figure 1-5.

Status Indicators

These LEDs indicate regulation conditions: Voltage Limiter High, Out-of-Band High, Out-of-Band Low, Voltage Limiter Low, Tapping Blocked, Reverse Power, and Voltage Reduction. Refer to Figure 1-6.

Refer to the **Control Operation, Control Features,** and **Advanced Features** sections of this manual for more information.

Flash Card Port

The flash card port accepts a Type 1 compact flash card. It is used to write existing data logs and to load and save standard and custom configurations. See Figure 1-6. Function Codes 350-355 are flash card functions; refer to the appropriate listing in Table 5-3. See the **Advanced Features: Compact Flash Card** section of this manual for more information.

SECTION 2: CONTROL INSTALLATION

WARNING: Hazardous Voltage. To protect personnel from surges while operating the control, follow these control enclosure grounding procedures: a) If the enclosure is attached to the regulator tank or is remote from the tank but only **accessible** with a ladder, connect the enclosure to the regulator-to-ground rod conductor; b) If the enclosure is accessible by personnel standing on the ground, connect the enclosure directly to a ground mat and ground rod. Failure to comply can result in severe personal injury or death. VR-T202.0

WARNING: Hazardous Voltage. The control box must be solidly earth grounded. Failure to comply can cause severe personal injury and equipment damage. VR-T203.0

CAUTION: Equipment damage. Only an ac power supply is to be used to energize the control externally. Do not use a dc-to-ac current inverter. Failure to comply can cause excessive harmonics to be generated and result in damage to the front panel. VR-T204.0

CAUTION: Equipment damage. Be mindful of polarity when using an external source. Polarity reversal will result in control damage. VR-T201.0

Mounting the Control

The Cooper CL-6 regulator control can be mounted on the regulator tank or at a point remote from the unit. Rubber-covered cable is available for interconnection between the control and the regulator. Refer to the **Accessories** section of this manual.

Placing the Control into Service

Refer to the appropriate regulator manual, as indicated on the regulator nameplate, for specific information on the regulator installation (see Figure 3-3). Refer to Tables 2-1 and 2-2 for control specifications and metering accuracy.

When energizing the control from an external source, use only a 120 Vac source, unless the control was configured for 240 V, as indicated by a decal adjacent to the terminals.

TABLE 2-1
Control Specifications

Description	Specifications
Physical Size	
Height	445 mm (17.5")
Width	260 mm (10.25")
Depth	635 mm (2.5")
Weight	5.2 kg (11.5 lbs.)
Burden @ 120 V	4 VA
Operating Temperature Range	-40° – +85° C
Control System Accuracy	±1%

TABLE 2-2
Metering Accuracy

Voltage Inputs **Load Voltage and Differential/Source Voltage** 80-137 Vac, 45-65 Hz with error not to exceed 0.5% *† of the reading under all conditions. The control will withstand up to 137 V without damage or loss of calibration.
Current Input 0-0.400 A ac 45-65 Hz with error not to exceed 0.6% (0.0012 A)* of the nominal full load current (0.200 A), under all conditions. The control will withstand the short-circuit rating of the regulator without damage or loss of calibration.
Calculated Values, kVA, kW, kvar 0-9999, with error not to exceed 1% * under all conditions.
Harmonic Analysis, Current and Voltage Harmonics 2nd–15th harmonic frequencies and THD, with error not to exceed 5% under all conditions.

* Basic accuracy of the device, excluding PT and CT errors.
† 0.5% on 120 V base: (0.5%) (120) = 0.6 V

Setting the Control for Service

The control must be properly programmed for service. Refer to the **Initial Control Programming** section of this manual.

The control must be energized to be programmed. Apply 120 Vac, or other voltage as indicated by decal, to the external source terminals; ensure the ground wire is connected to the ground terminal; and place power switch in the external position. Alternately, the regulator may be energized at line potential and the power switch placed in the Internal position.

When power is applied to the control, the self-diagnostic routine will commence and the LCD display will activate, followed by a (PASS) message. Check the date and time displayed and reset if necessary. If the **(FAILURE)** or **(Diagnostic Error)** message is displayed, refer to the **Troubleshooting** section of this manual.

Operational Check

Pre-Installation Check

The CL-6 Control has the facilities for either manual or automatic operation of the tap-changer, using either the internal source of power (the regulator) or an external source. To perform an operational check of the control before installing the regulator, follow these steps.

1. Open **V1** (and **V6**, if present) knife switch(es) located on back panel of control enclosure.
2. Place POWER switch in **Off** position and CONTROL FUNCTION switch in **Off** position.
3. Connect a variable 120 Vac 50/60 Hz source to EXTERNAL SOURCE terminals. Controls wired for an external source of 220–240 Vac have a decal specifying "240" at the terminals. Verify proper polarity.
4. Place POWER switch in **External** position.
5. Move CONTROL FUNCTION switch to **Manual**, press and hold **Raise/Lower** momentary toggle switch. Allow tap-changer to operate to **8 L**, the 5% buck position. Verify tap position indication (TPI) is registering properly by pressing ***Tap Position** key.
6. Raise and hold the **Raise/Lower** momentary toggle switch. Allow tap-changer to operate to **8 R**, the 5% boost position.
7. Place CONTROL FUNCTION switch in the **Auto/Remote** position.
8. Increase variable voltage source until applied voltage is out-of-band. Note that the **Out-of-Band High** LED on the front panel will come on. After the time delay period, control will issue a lower-tap-change signal. Verify tap position indication (TPI) is registering properly by pressing ***Tap Position** key and comparing the reading to the tap position indicator on the regulator junction box.
9. Decrease variable voltage source until applied voltage is out-of-band. Note that the **Out-of-Band Low** LED on the front panel will come on. After the time delay period, control will issue a raise-tap-change signal. Verify tap position indication (TPI) is registering properly by pressing ***Tap Position** key and comparing the reading to the tap position indicator on the regulator junction box.
10. Place CONTROL FUNCTION switch in **Manual** position and manually return tap-changer to neutral. When on neutral, the **Neutral Light** will illuminate continuously and position indicator will point to zero.
11. Place CONTROL FUNCTION switch in **Off** position.
12. Press down on DRAG HAND Reset momentary toggle switch and release; the position indicator drag hands will reset to indicating hand.
13. Turn POWER switch to **Off** and disconnect power supply from EXTERNAL SOURCE terminals.

In-Service Check

With the control programmed for basic operation, perform an operational check of manual and automatic operation.

1. Press the ***Comp Voltage** key to display compensated voltage and both band edges in the LCD.
2. Place CONTROL FUNCTION switch in **Manual** position.
3. Toggle the **Raise/Lower** switch up to activate a raise operation. Allow tap-changer to operate for enough steps to take voltage out-of-band. Note that the **Out-of-Band High** LED on the front panel will come on.
4. Place CONTROL FUNCTION switch in the **Auto/Remote** position. After the time delay period, the control should cause the regulator to step down to the top band edge. This will display in the LCD.

   EXAMPLE: 120 V and a 2 V bandwidth = 121 V top band edge.
5. After voltage is brought in-band and tap changing has stopped, move CONTROL FUNCTION switch to the MANUAL position.
6. Toggle the **Raise/Lower** switch down to activate a lower operation. Allow tap-changer to operate for enough steps to take voltage out-of-band. Note that the **Out-of-Band Low** LED on the front panel will come on.
7. Place CONTROL FUNCTION switch in the **Auto/Remote** position. After the time delay period, the control should cause the regulator to step up to the lower band edge. This will display in the LCD.

   EXAMPLE: 120 V and a 2 V bandwidth = 119 V lower band edge.

Control Bench Testing

When applying external voltage to a CL-6 control, disconnected from the control enclosure, follow these steps:

1. Place a jumper between positions **7** and **8** of the disconnect plug on the wiring harness of the control.
2. Place a jumper between positions **5** and **6** of the disconnect plug on the wiring harness of the control.
3. Connect the external source to the extenal source post on the front of the control. Connect the hot lead to the black terminal post, the neutral to the white post, and the ground to the green terminal post.

Field Calibration Check

To check the calibration of the control, compare the voltage that the control reports on the display to the voltage measured at the test terminals.

Note: Field calibration checks are only an indication of calibration and are not as precise as the procedure described in the **Troubleshooting** section of this manual.

1. Connect an accurate true-RMS responding voltmeter to the voltmeter terminals.
2. Use the keypad to access FC 47 parameter. Key in:

   FUNCTION, 47, ENTER.

   Or access via the menu: **Features > Calibration > Voltage Calibration**.
3. Under ideal conditions, the displayed voltage of the control will match the voltage of the voltmeter. Realistically, the voltages may be slightly different because:

   A. The metering and operation is based upon the RMS value of the fundamental power line frequency. Thus, the metered values exclude the influences of harmonic voltages which are probably present on the line. A true RMS meter, however, will include these harmonic voltages in its calculations of the RMS voltage. This does not present a problem with either metering device, since each device uses a different approach to metering.

   B. The calibration of the voltmeter being used for measurement is probably not exact. Even a very good meter with a basic accuracy of 0.5% could be in error by as much as 0.6 V (out of 120 V) and still be considered to be "in calibration." The control is calibrated using a conditioned power supply and reference voltmeters which are periodically calibration-checked, traceable to the National Bureau of Standards.

Note: The control is designed to perform ratio correction in the software. Through the use of the ratio-correcting transformer (RCT) located on the back panel, the voltage brought to the control is usually corrected to the 120 V base voltage. However, there are some ratings in which this voltage is not fully corrected by the RCT. Refer to the regulator nameplate for specific information for that regulator. Table 3-3 gives a general indication of these voltages.

Whatever voltage results from dividing the nominal system voltage, FC 43, by the overall PT ratio, FC 44, is considered by the control to be the nominal voltage. Therefore, when that voltage appears at the input of the control, 120 V will be reported as the output voltage, FC 6, whether the nominal is actually 120 V or not. Likewise, the compensated voltage, FC 8, and input voltage, FC 7, will be scaled accordingly. If the regulator is equipped and programmed for reverse power operation, the compensated voltage will be correct even during reverse power conditions.

The load voltage, FC 10; source voltage, FC 11; and calculated parameters such as the kVA, kW, and kvar, are not scaled similarly to Function Codes 6 and 8. Instead, they reflect the true value of line voltage.

Note: The voltage measured at the test terminals during reverse power flow is the new *source* voltage at the load bushing of the regulator.

Removal from Service

Refer to the appropriate regulator manual as indicated on the regulator nameplate for further information.

Determining Neutral Position

DANGER: Explosion Hazard. During bypass switching, the regulator must be in the neutral position. Prior to bypass switching: 1) The regulator must be placed in the neutral position; 2) Tap-changer operation must be disabled during the bypass switching. If the regulator is in any other position, part of the series winding will be shorted when the bypass switch is closed, resulting in high circulating current. Failure to comply will result in death or severe personal injury and equipment damage. VR-T205.0

WARNING: Explosion Hazard. Bypass a regulator with the line energized only if both the position indicator and the neutral light indicate neutral. If both do not indicate neutral, the line should be de-energized to avoid shorting part of the series winding and resultant high circulating current. Failure to comply can result in death or personal injury and equipment damage. VR-T206.0

Return the regulator to neutral. Only a regulator in the neutral position can be safely removed from service without interrupting load continuity. It is recommended to use more than one method to determine the neutral condition.

Return the Regulator to Neutral

WARNING: Explosion Hazard. Always use the CONTROL FUNCTION switch (labeled Auto/Remote, Off, Manual and Raise or Lower) to operate the regulator, not the power switch. Failure to comply can result in the tap-changer stepping off of neutral immediately upon being energized, causing personal injury and equipment damage. VR-T207.0

1. Use the **Raise/Lower** switch to bring the regulator to the neutral position.
2. When in neutral, the **Neutral Light** will be continuously lit on the control front panel and the position indicator will point to zero.

WARNING: Explosion Hazard. To stop the regulator on the neutral position, the CONTROL FUNCTION switch should be returned to Off during the switching operation from positions **1R** or **1L** to position *neutral*. Switching to Off prior to reaching the neutral position prevents overshoot. Failure to comply can result in death or severe personal injury and equipment damage. VR-T208.0

3. Verify the neutral position of the regulator using four methods.
   - **A.** Verify that the neutral indicator light on the control is indicating the neutral position. Neutral is indicated only when the light is continuously illuminated.
   - **B.** Verify the tap position of the control indicates neutral.
   - **C.** Verify that the position indicator on the regulator is in the neutral position.
   - **D.** Using an acceptable method, verify that there is no voltage difference between the source and load bushings.

WARNING: Explosion Hazard. After placing the regulator in the neutral position for bypass switching, always disable the motor to prevent a tap change during bypassing which can result in the tap-changer stepping off of neutral. Failure to comply can cause death or severe personal injury and equipment damage. VR-T209.0

4. When the regulator has been placed in the neutral position, but prior to bypassing, additional safety action must be taken to ensure that the tap-changer will not inadvertently switch to an off-neutral position. This can be accomplished by doing the following:
   - **A.** Place the CONTROL FUNCTION switch in the **Off** position.
   - **B.** Remove the motor fuse.
   - **C.** Place the control POWER switch in the **Off** position.
   - **D.** Open **V1**, knife switch (and **V6** if present) located on the control back panel.

Removal of Control

The control may be removed from the regulator with the regulator energized. Record settings, etc., to facilitate replacement of the control.

To open the control, unscrew the captive knurled knobs on the left side of the panel. This allows the control to swing open on its hinges. With the control open, the back panel is readily accessible. The design of the control enclosure, back panel, and control enables easy replacement of the control, leaving the back panel, control enclosure, and cable intact. To remove the control, proceed as follows:

WARNING: Flashover Hazard. Push the **C** shorting switch closed before attempting to remove the front panel. Failure to comply can open the regulator CT circuit, producing a flashover in the control, causing personal injury and equipment damage. VR-T210.0

1. Push closed the current shorting switch **C**. This shorts out the secondary of the regulator CT.

   Note: Regulators shipped with a quick disconnect cable contain a solid-state CT monitoring circuit in the junction box. This device automatically places a burden on the CT anytime the CT circuit is opened. For consistency, it is recommended that the CT shorting switch be used whenever it is present on the back panel.

2. Pull open disconnect switch **V1** (and **V6** if present). This de-energizes terminal board **TB2**.
3. Disconnect the control from the back panel at **TB2**, located at the bottom of the back panel.
4. Disconnect the control ground lead from the back panel.

The control can now be lifted off its hinges. Care should be taken to prevent damage to a control while in transit and/or storage.

WARNING: Flashover Hazard. Do not pull open the current shorting switch C until the TB2 connection is completed. Failure to comply can open the regulator CT secondary and cause a flashover in the control, causing personal injury and equipment damage. VR-T211.0

Replacement of Control

To place a control into the control enclosure, follow the procedure outlined below:

1. Engage control on enclosure hinges.
2. Connect control ground lead to back panel.
3. Reconnect control to back panel at **TB2**, located at the bottom of back panel.
4. Push closed disconnect switch **V1** (and **V6** if present).
5. Pull open current shorting switch **C**.
6. Close control and tighten locking screws.

SECTION 3: INITIAL CONTROL PROGRAMMING

This section explains each step for properly completing initial control programming settings on a CL-6 voltage regulator control and back panel. Check the System Line Voltage rating on the regulator nameplate. Refer to the regulator service manual as identified on the regulator nameplate for additional information on the regulator.

This section covers standard set-up procedures for controls, including control replacement. Refer to **Programming and Reconfiguring for Different Voltage Systems,** in this section of this manual, when installing/replacing the CL-6 control and reconfiguring the regulator for a different voltage system.

1. Start with all switches on the control front panel turned **Off.**
2. There are two options for powering the control: internal power or external power. Select one method and follow the appropriate step.

   a. Internal Power

   Turn POWER switch to **Internal** from the **Off** position.

   b. External Power

   Apply external source to EXTERNAL SOURCE banana jacks: hot lead to red, top banana jack; neutral lead to white, bottom banana jack; ground to green ground banana jack.

   Turn POWER switch to **External** from the **Off** position.

Basic Programming

Complete the steps in Table 3-1 to program the control for basic operation. Continue with the steps in Table 3-2 to then program the control for additional features or control replacement. For each item, check each value and verify or change as appropriate.

Note: After turning on the control and the LCD displays **PASS**, press **Escape** for further keypad use.

Step-by-step instructions are included in Tables 3-1 and 3-2. The Instructions column lists keys to press (i.e.; Enter, Edit, 7, etc.). Also, italicized instructions denote a choice or an entry; *Value* denotes a desired value entered via the numeric keypads; and following each "Scroll" is an italicized list of *alternatives* that appear in the display, within that function code. Scroll through the list until the desired alternative is selected, and then press Enter.

Perform a Demand Master Reset (FC 38) after completing the initial control programming to reset to present demand values.

Note: Go to FC 141 to change the language setting.

TABLE 3-1
Programming for Basic Operations

Function Code	Description	Instructions
99	Security Function	Function, 99, *Enter Password 32123 (default),* Enter
1	Forward Set Voltage	Function, 1, Enter, Edit, *Value,* Enter
2	Forward Bandwidth	Function, 2, Enter, Edit, *Value*, Enter
3	Forward Time Delay	Function, 3, Enter, Edit, *Value*, Enter
4	Forward Line Drop Comp. Resistance	Function, 4, Enter, Edit, *Value*, Enter
5	Forward Line Drop Comp. Reactance	Function, 5, Enter, Edit, *Value*, Enter
40	Regulator Identification	Function, 40, Enter, Edit, *I. D. number*, Enter
41	Regulator Configuration	Function, 41, Enter, Edit, Scroll-*Wye; Delta Lagging; Delta Leading,* Enter
42	Control Operation Mode	Function, 42, Enter, Edit, Scroll-*Sequential; Time Integrating;Voltage Averaging*, Enter
43	System Line Voltage	Function, 43, Enter, Edit, *Value*, Enter
44	Over All P.T. Ratio	Function, 44, Enter, Edit, *Value*, Enter
45	C.T. Primary Rating	Function, 45, Enter, Edit, *Value*, Enter
46	Demand Time Interval	Function, 46, Enter, Edit, *Value*, Enter
49	Tap Changer Type	Function, 49, Enter, Edit, Scroll-*Cooper QD8; Cooper QD5; Cooper QD3; Cooper Spring Drive; Cooper Direct Drive; Siemens; General Electric; Toshiba*, Enter
50	Calendar/Clock	Function, 50, Enter, Edit, *Month, Day, Year, Hour, Minute*, Enter
140	Regulator Type	Function, 140, Enter, Edit, Scroll- *Type A; Type B,* Enter
144	P.I. ADD-AMP High Limit	Function, 144, Enter, Edit, *Value*, Enter
145	P.I. ADD-AMP Low Limit	Function, 145, Enter, Edit, *Value*, Enter
146	Vin P.T. Configuration	Function, 146, Enter, Edit, *Value*, Enter
69	Blocking Status	Function, 69, Enter, Edit, Scroll-*Normal; Blocked*, Enter

TABLE 3-2
Programming Additional Features

Function Code	Description	Instructions
Requirements for Reverse Sensing Mode without IDPTs		
039	Source Voltage Calculator	Function, 39, Enter, Edit Scroll-*On; Off*, Enter
Required for Reverse Sensing Modes		
051	Reverse Set Voltage	Function, 51, Enter, Edit, *Value*, Enter
052	Reverse Bandwidth	Function, 52, Enter, Edit, *Value*, Enter
053	Reverse Time Delay	Function, 53, Enter, Edit, *Value*, Enter
054	Reverse LDC Resistance	Function, 54, Enter, Edit, *Value*, Enter
055	Reverse LDC Reactance	Function, 55, Enter, Edit, *Value*, Enter
056	Reverse Sensing	Function, 56, Enter, Edit, Scroll-*Locked Forward; Locked Reverse; Reverse Idle; Bidirectional; Neutral Idle/; Cogeneration; Reactive Bidirectional*, Enter
Required for Voltage Reduction Mode		
070	Voltage Reduction Mode	Function, 70, Enter, Edit, Scroll-*Off; Local/Digital Remote; Remote-Latch; Remote-Pulse*, Enter
072	Local/Digital Reduction Value	Function, 72, Enter, Edit, *Value*, Enter
073	Remote #1 Reduction Value	Function, 73, Enter, Edit, *Value*, Enter
074	Remote #2 Reduction Value	Function, 74, Enter, Edit, *Value*, Enter
075	Remote #3 Reduction Value	Function, 75, Enter, Edit, *Value*, Enter
076	# of Pulse Reduction Steps	Function, 76, Enter, Edit, *Value*, Enter
077	% of Voltage Reduction Per Pulse Step	Function, 77, Enter, Edit, *Value*, Enter
Required for Voltage Limit Mode		
080	Voltage Limit Mode	Function, 80, Enter, Edit, Scroll-*Off; High Limit Only; High/Low Limits*, Enter
081	High Voltage Limit	Function, 81 Enter, Edit, *Value*, Enter
082	Low Voltage Limit	Function, 82, Enter, Edit, *Value*, Enter

Programming and Reconfiguring for Different Voltage Systems

Reconfiguring regulators requires more than just reprogramming the control. In reconfiguring, refer to the nameplate and, if necessary, reconnect the ratio-correcting transformers (RCTs) on the back panel (see Figure 3-1). In some cases, it may be necessary to reconnect the tap windings in the regulator via the hand-hole cover.

Refer to the nameplate for information for programming and reconfiguring a regulator: confirm Regulator Configuration (FC 41), System Line Voltage (FC 43), and Overall PT Ratio (FC 44). Refer to **Allowable System Voltages and Calculation of Overall PT** Ratio and **Determination of Leading or Lagging in Delta-Connected Regulators,** in this section of the manual.

WARNING: Explosion Hazard. Bypass a regulator with the line energized only if both the position indicator and the neutral light indicate neutral. If both do not indicate neutral, the line should be de-energized to avoid shorting part of the series winding and resultant high circulating current. Failure to comply can result in death or personal injury and equipment damage.

1. Start with all switches on the control front panel turned **Off**.
2. Refer to the nameplate. If the Control Winding Taps are required to be changed to reconfigure, de-energize the regulator. Open up the hand hole and reconnect the **E** tap lead on the tap-changer terminal board on top of the tap-changer. (Example: If the regulator is being changed from a 7200 to 14400 load voltage, the Control Winding tap needs to be changed from E_2 to E_1.) See Figure 3-3 for nameplate information.
3. Open **V1** switch and, if present, **V6**. Refer to Figure 3-2.
4. Connect the RCT per the information supplied by the nameplate. This RCT is to be connected to the value listed on the nameplate for the load voltage to be regulated. The adjustable lead is tagged and has a loop in it.
5. Close **V1** switch and, if present, **V6**.
6. There are two options for powering the control panel: internal power or external power. Select one method and follow the appropriate step.

   a. Internal Power

   Turn POWER switch to **Internal** Power from the **Off** position.

   b. External Power

   Apply external source to EXTERNAL SOURCE banana jacks: hot lead to red, top banana jack; neutral lead to white, bottom banana jack; ground to green ground banana jack.

   Turn POWER switch to **External** Power from the **Off** position.

Refer to Tables 3-1 and 3-2 for the steps to program the control panel for operation. Refer to the **Appendix** for the Wiring Diagram.

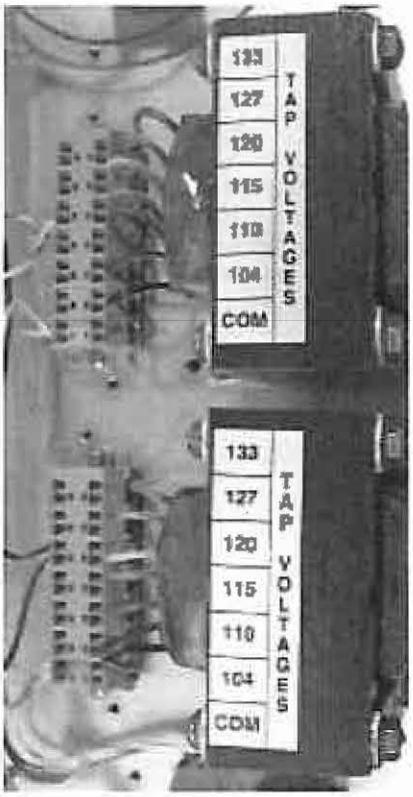

Figure 3-1.
Ratio-correcting transformers' connections.

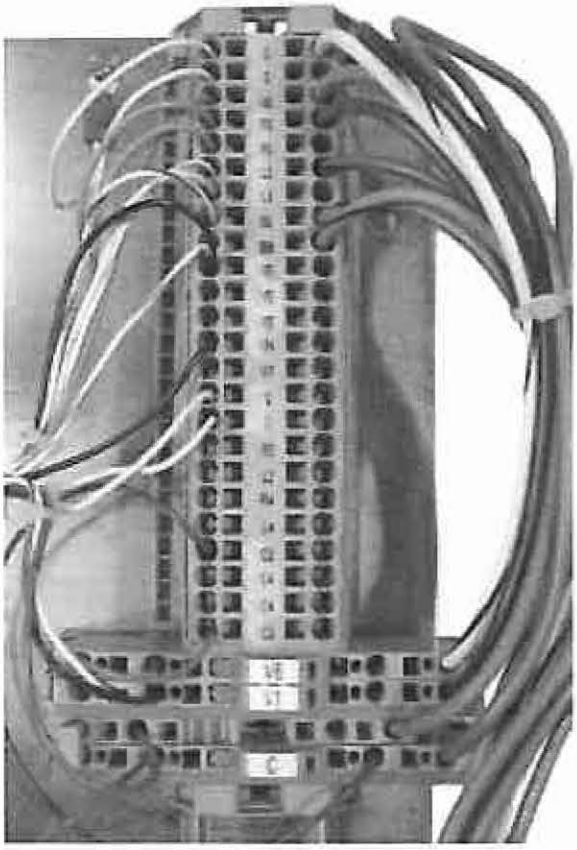

Figure 3-2.
V1, V6, and C connections.

Allowable System Voltages and Calculation of Overall PT Ratio

If the system voltage is other than those listed on the nameplate, it can be determined if there is sufficient ratio correction available from the control winding (internal PT) taps and the Ratio Correction Transformer (RCT) taps to allow the CL-6 Series control and motor to function properly. The general guideline is that the overall PT ratio is sufficient if the voltage delivered to the control for the nominal voltage conditions is in the range of 115–125 V.

To determine the voltage delivered to the control, use the following procedure:

1. Calculate the desired PT ratios.

   Desired PT Ratio = Desired system voltage ÷ 120 V

2. Choose the internal PT ratio on the nameplate closest to the desired PT Ratio.
3. Calculate the actual voltage at the output of the internal PT.

   Internal PT Output Voltage = Desired system voltage ÷ Selected Internal PT Ratio

4. Choose the RCT tap (133, 127, 120, 115, 110, 104) closest to the internal PT output voltage.
5. Given the RCT input tap, use Table 3-3 to determine the RCT ratio.
6. Calculate the control input voltage.

   Control Input Voltage = Internal PT Output Voltage ÷ (RCT Ratio)

7. Calculate the overall PT Ratio.

   Overall PT Ratio = Internal PT Ratio x (RCT Ratio)

EXAMPLE: If a 60 Hz, 7620 V regulator is to be used on a system with a nominal voltage of 2500 V, the following is determined:

1. 2500 V ÷ 120 V = 20.8
2. Choose 20:1 for the internal PT ratio.
3. Internal PT output voltage = 2500 V ÷ 20 = 125 V
4. Best RCT input tap is 127.
5. RCT ratio is 1.058.
6. Control input V = 125 ÷ 1.058 = 118 V

   This is within allowable range.

7. Overall PT ratio = 20 × 1.058 = 21.2:1

TABLE 3-3
RCT Ratios

RCT Input Tap	RCT Ratio
133	1.108
127	1.058
120	1.000
115	0.958
110	0.917
104	0.867

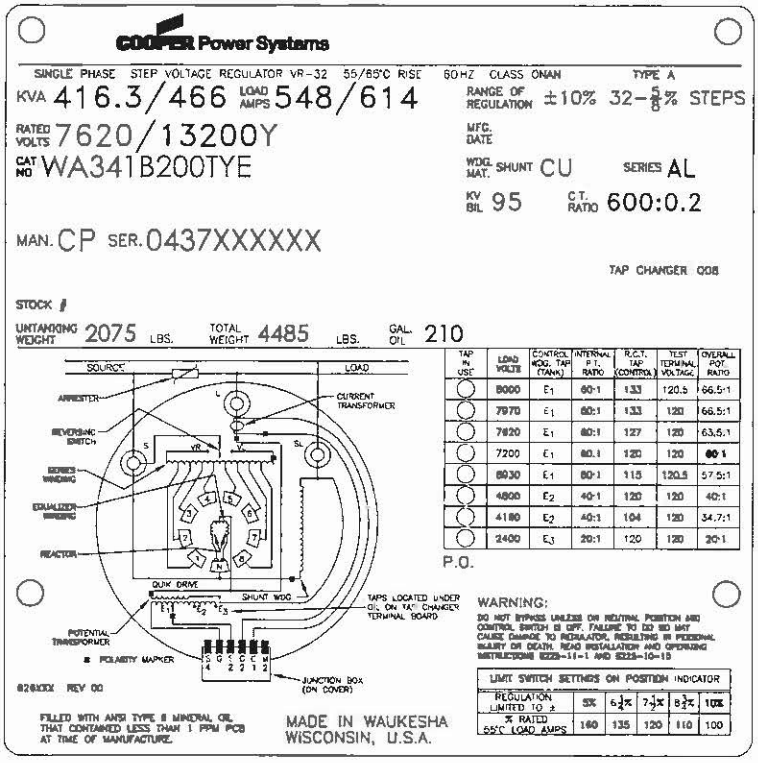

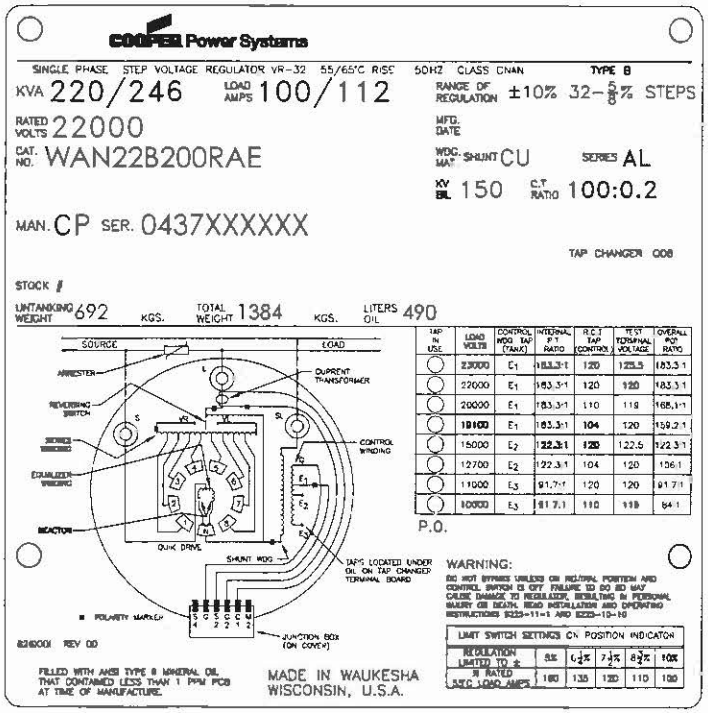

Figure 3-3.
Nameplates, 60 Hz regulator and 50 Hz regulator shown.

Determination of Leading or Lagging in Delta-Connected Regulators

For a regulator to operate properly when connected phase to phase, it is necessary for the control to be programmed with the correct regulator configuration in Function Code 41. It must be determined whether it is connected leading or lagging. The control aids the operator in making this determination.

1. Regulator must be installed.
2. POWER switch must be set to **Internal**.
3. **V1** knife switch (and **V6**, if present) must be closed.
4. Knife switch **C** must be open. Current must be flowing.
5. CONTROL FUNCTION switch may be in any position **(Auto/Remote-Off-Manual).**
6. For regulator #1, set Function Code 41 to Delta Lagging and record the Power Factor, Function Code 13.
7. For the same regulator, set Function Code 41 to Delta Leading and record the Power Factor.
8. Repeat steps 6 and 7 for each regulator in the bank.
9. For each regulator, one of the two power factor values will be reasonable and the other will be unreasonable.

   Set the Regulator Configuration (FC 41) to the value which produced the reasonable power factor. See Table 3-4.

For one regulator: Set Function Code 41 to the value which produced the reasonable power factor.

For two regulators in open delta: See the example in Table 3-4. In an open delta connection, one of the regulators will always be leading and the other lagging. The reasonable power factor for each regulator should be very close to the typical power factor of the system. In this example, regulator #1 is the lagging unit and regulator #2 is the leading unit.

For three regulators in closed delta: In closed delta, all three regulators are either leading or lagging, depending on how they are connected relative to generator phase rotation. Set Function Code 41 of all three regulators to the value which produced the reasonable power factor.

TABLE 3-4
Sample Power Factor Values for Regulators Connected in Open Delta Configuration

Configuration (FC 41)	Recorded Power Factor (FC 13)	
	Reg. #1	Reg. #2
Delta Lagging	0.94*	-0.77
Delta Leading	0.17	0.93*

*Reasonable power factor values.

SECTION 4: CONTROL OPERATION

Automatic Operation

In the automatic mode of operation, the POWER switch will be set on **Internal** and the CONTROL FUNCTION switch will be placed on **Auto**. The regulator is assumed energized from the primary circuit. If the sequential mode of operation (the standard mode) is selected, the control response is as follows:

1. As the primary voltage moves to a level which represents an out-of-band condition, the sensing voltage will correspondingly reflect the same results on the 120 V base. Assuming the voltage dropped low, a lower than normal signal will appear at the printed circuit board input terminals.
2. The signal is transformed and converted into a digital format for use by the microprocessor.
3. The microprocessor, recognizing the voltage condition as low and out-of-band, issues an output which activates the **Out-of-Band Low** indicator and starts an internal timer, which is equivalent to the time-delay setting.
4. During the time-out period, the voltage is continually sensed and sampled. Should the voltage momentarily move into band, the **Out-of-Band Low** indicator is deactivated and the timer is reset.
5. At the end of the time-delay period, the microprocessor issues an output which causes the RAISE triac to be activated.
6. The tap-changer motor begins to turn as a result of triac closure, and a cam on the tap-changer closes the RAISE holding switch. This now provides an alternate source for the motor current, which passes through the input terminals on the circuit board.
7. The microprocessor now recognizes that current is flowing in the holding switch circuit. The RAISE triac is deactivated.
8. As a result of the triac being deactivated, the motor current is now carried solely by the holding switch circuit. When the motor rotation is complete, the holding switch opens as a result of the cam action and the motor stops.
9. The microprocessor recognizes that the tap change is now complete by detecting that motor current is no longer flowing. The operations counter and tap position indication are incremented. A 2-second pause then occurs, allowing the sensing voltage to stabilize after motor operation.
10. At the end of this pause, if the voltage is still out-of-band, another output is issued to reactivate the Raise triac, thus starting another tap change sequence. If the voltage is in-band, the **Out-of-Band Low** indicator is turned off and the time-delay timer is reset.

    This sequence is altered slightly if the voltage-averaging or time-integrating mode of operation is selected. These characteristics are described in **Control Operating Modes** in this section of the manual.

Manual Operation

In the manual mode of operation, the POWER switch can be set on either **Internal** or **External** and the control switch will be placed on manual. If the external position is chosen, an external source must be applied to the terminals on the control. This should be a nominal 120 Vac source (or other ac voltage as indicated by a decal) and should not be a direct current to alternating current (dc-to-ac) inverter.

Operation of the momentary toggle **Raise/Lower** switch applies power through the position indicator limit switch contacts directly to the tap-changer motor. As the tap-changer motor cam rotates, the holding switch is closed, as described above in the **Automatic Operation** section. This holding-switch current is sensed by the circuit board, and the operations counter and tap position indicator are appropriately updated.

Tap change will continue as long as the **Raise/Lower** switch is held in either the raise or lower position and the ADD-AMP™ limit switch is not activated (open circuit).

Self-Diagnostics

There are three events which trigger the self-diagnostic routines: the initial control power-up, operator entry of self-test mode, or detection of a firmware problem. Refer to the **Troubleshooting** section of this manual for more information on control self-diagnostics.

Security System

The security (password) system implemented on the control is structured into four levels. This permits selective access to the various parameters as dictated by the active security level. Most function codes may be read (accessed) at level 0, the base (unsecured) level. The security level required to change or reset each parameter is listed in Table 4-1. The security access codes for levels 1, 2, and 3 have been programmed into the control at the factory. These codes may be changed by the user according to Table 4-1. Access into the system is accomplished by entering the appropriate security code at Function Code 99.

The user has the option of overriding (inhibiting) one or more levels of security by choosing the appropriate Security Override Code at Function Code 92. Choices at Function 92 are standard security mode (no override), override level 1, override levels 2 and 1, and override levels 3, 2, and 1.

The values of the three security codes, Function Codes 96, 97, and 98, may be read only at level 3. If the level 3 code has been changed and forgotten, it may be retrieved with the flash card and reader or with a personal computer using the Cooper Control Interface™ program.

TABLE 4-1
Security Codes

Security Level	Accessible at Function Code	Factory-Programmed Code	User-Definable Range	Functions Available at the Active Code
0	No Code Required	No Code Required	No Code Required	Read all parameters except security (Function Codes 96, 97, & 98).
1	96	1234	1-9999	Read all parameters as described above, and reset all demand metering and tap position maximum and minimum values and date/times.
2	97	12121	10000-19999	Read all parameters as described above, reset all demand meter and tap position maximum and minimum values and date/times, and change any operational or setup parameter.
3	98	32123	20000-32766	Read, reset, or change any parameter.

Basic Control Operations

Set Voltage

The set voltage is the voltage level to which the control will regulate on the 120 V base. Since the control performs ratio correction in the software, this value will normally be set for 120.0 V, unless it is desired to operate at a voltage level higher or lower than nominal. For proper operation, the ratio-correcting transformer, located on the back panel of the control enclosure, must also be set for the correct tap as shown by the regulator nameplate.

Bandwidth

The bandwidth is defined as that total voltage range, around the voltage setting, which the control will consider as a satisfied condition. As an example, a 2 V bandwidth on a 120 V setting means the operational timer will not activate until the voltage is below 119 V or above 121 V. When the voltage is in-band, the band edge indicators are off and the timer (time delay) is off. Selection of a small bandwidth will cause more tap changes to occur, but will provide a more tightly regulated line. Conversely, a larger bandwidth results in fewer tap changes but at the expense of better regulation. Selection of the bandwidth and time-delay settings should be made recognizing the interdependence of these two parameters.

Time Delay

The time delay is the period of time (in seconds) that the control waits from when the voltage first goes out-of-band to the time when a tap change is issued. If a rapid response is required, a shorter setting should be used. If several devices on the same line are to be coordinated (cascaded), different time-delay settings will be required to allow the proper devices to operate in the desired sequence. Proceeding from the source, each device should have a longer time delay than the preceding device. A minimum 15-second difference between regulators located on the same phase on the same feeder is recommended. The delay allows the upstream device to perform its operations prior to the downstream device reacting. The time-delay setting of a voltage-minimizing, activated capacitor control should be set the same as a regulator control. Alternate time delays are available with the voltage limiting feature. Refer to the **Voltage Limiting** section of this manual.

Line Compensation, Resistance and Reactance Settings

Quite often regulators are installed some distance from the theoretical load center (the location at which the voltage is to be regulated). This means the load will not be served at the desired voltage level due to the losses (voltage drop) on the line between the regulator and the load. Furthermore, as the load increases, line losses also increase, causing the lowest voltage condition to occur during the time of heaviest loading.

To provide the regulator with the capability to regulate at a projected load center, the control has line-drop compensation elements within it. This circuitry usually consists of a current source (CT), which produces a current proportional to the load current, and resistive (R) and reactive (X) elements through which this current flows. As the load increases, the resulting CT current flowing through these elements produces voltage drops, which simulate the voltage drops on the primary line.

Within the control, the input current is sampled and is used in a computer algorithm which calculates the respective resistive and reactive voltage drops based upon the line-drop compensation values programmed into the control at Function Codes 4 and 5 (or Function Codes 54 and 55 for reverse power flow conditions). This is an accurate and economical means of developing the compensated voltage.

To select the proper R and X values, the user must know several factors about the line being regulated.

Regulator Configuration

The control is designed to operate on wye (star)-connected and delta-connected regulators. Regulators connected line-to-ground (wye) develop potentials and currents suitable for direct implementation in the control. Regulators connected line-to-line (delta) develop a potential-to-current phase shift which is dependent upon whether the regulator is defined as leading or lagging. The phase shift must be known by the control to permit accurate calculations for correct operation. This is accomplished by entering the proper option at Function Code 41: Wye, Delta Lagging, or Delta Leading.

Control Operating Modes

The CL-6 Control supports three modes in which the control responds to out-of-band conditions, permitting use of the mode that best fits the application. The three modes are Sequential, Time Integrating, and Voltage Averaging. The mode setting can be selected by scrolling within Function Code 42 or through **Settings > Configuration** in the menu structure.

Sequential Mode

This is the standard mode of response incorporated on the CL-6 regulator controls. When the load voltage goes out-of-band, the time-delay circuit is activated. At the end of the time-out, a tap change is initiated. After each tap change, a 2-second pause occurs to permit the control to sample the voltage again. This sequence continues until the voltage is brought into band, at which time the timing circuit is reset. Whenever the voltage goes in-band, the timer is reset.

Time-Integrating Mode

When the load voltage goes out-of-band, the time-delay circuit is activated. At the end of the time-out, a tap change is initiated. After each tap change, a 2-second pause occurs to permit the control to sample the voltage again. If the voltage is still out-of-band, another tap change is performed. This sequence continues until the voltage is brought into band. When the voltage goes in-band, the timer is decremented at the rate of 1.1 seconds for every second elapsed, until it reaches zero.

Voltage-Averaging Mode

When the load voltage goes out-of-band, the time-delay circuit is activated. During this time-delay period, the microprocessor monitors and averages the instantaneous load voltage. It then computes the number of tap changes required to bring the average voltage back to the set voltage level. When the time-delay period is complete, the computed number of tap changes are performed without any delay between them, up to a maximum of five consecutive tap changes, to avoid an accumulative error. The timer is not reset on voltage excursions in-band unless the voltage stays in-band for at least ten continuous seconds. An error-averaging characteristic is inherent with the voltage-averaging mode.

Note: To permit sufficient time for the microprocessor to average the voltage, the time-delay period must be 30 seconds or longer. If the time delay is set for less than 30 seconds, the control ignores the setting and uses 30 seconds.

System Line Voltage

The control performs ratio correction in the software, and, consequently, the primary voltage must be entered for the control to perform this calculation. This value is simply the nominal single-phase voltage supplied across the L and SL terminals. Regulators shipped from the factory are set for the voltage indicated by the pin on the nameplate, and this value is programmed into the control. If the regulator is installed on any other system voltage, this system voltage must be entered for proper operation.

Potential Transformer Ratio

Since the control performs ratio correction in the software, the PT ratio for the voltage-sensing supply must be entered for the control to perform this calculation. The ratio to be programmed in the control is the OVERALL PT RATIO, as shown on the regulator nameplate for every applicable system voltage for the particular regulator. The PT ratio, which corresponds to the regulator's rated voltage, is set by the factory. If the regulator is installed on any other system voltage, the corresponding PT ratio must also be entered for proper operation. This value includes the correction performed by the ratio-correcting transformer (RCT) on the back panel of the control enclosure. The voltage from the RCT is normally corrected to 120 V. However, when this voltage is other than 120 V, the control will calibrate the input voltage to a 120 V base and 120 V will be displayed at Function Code 6. The voltage test terminals will continue to show the voltage as applied to the control from the RCT.

Current Transformer Primary Rating

The control is designed for 200 mA (full scale) as the rated CT current and will meter to 400 mA (200% load) with no loss of accuracy. Ratio correction is performed by the software, and, consequently, the CT primary rating must be entered. The CT primary rating is available on the regulator nameplate.

EXAMPLE: If a CT ratio 400/0.2 is indicated on the nameplate, then 400 must be entered at Function Code 45.

Delta-Connected (Line-to-Line Connected) Regulators

When a regulator is connected line-to-line, the phase angle of the line current is 30 degrees displaced from the voltage impressed across the regulator. Setting the Regulator Configuration, FC 41, correctly, the correct relationship between the voltage and current is established. Setting the regulator Configuration to the incorrect delta value (lagging instead of leading, or vice versa), the phase angle will be in error 60 degrees. Below are considerations concerning delta-connected regulators:

- The basic decision-making of the control when line-drop compensation is not used is not affected by the phase angle; therefore, operation will be correct even if FC 41 is set to either of the two incorrect values. This is true for forward and reverse operation.
- If line-drop compensation is used, the scaling of the R and X values is controlled by FC 41; therefore, it is important to correctly set FC 41 for the compensated voltage to be set correctly.
- The following metering parameters will be correct only if the Regulator Configuration is correctly set: power factor, kVA, kW, kvar, demand kVA, demand kW, and demand kvar.

  Note: The kVA, kW, kvar, demand kVA, demand kW, and demand kvar use the line-to-line voltage; therefore, they display the value at the regulator not on any one feeder. To determine the total three-phase value of any one of these parameters, each regulator value must be divided by $\sqrt{3}$ (1.732) before adding the three together.

SECTION 5: CONTROL PROGRAMMING

Use the front keypad to program the control. A Quik-Start™ setup is given for programming for basic regulation. Refer to the **Control Front Panel** section of this manual for information on using the front panel.

Note: After turning on the control and the LCD displays **PASS**, press **Escape** for further keypad use.

Control functions with corresponding control function codes are accessed via the keypad. The menu system is structured with a main menu (Level 1), a sub-menu (Level 2), and parameters (Level 3). These parameters and other text information are displayed on the LCD screen.

Refer to Table 5-2 for the three-level, nested menu of functions and parameters.

Refer to Table 5-3 for a numerical listing of Function Codes and corresponding menu and parameter information.

Multiple menu items with the same function code are allowed; the first menu item listed is then the main function called up when that function code is entered at the keypad. Access multiple menu items within the same function code with the ↑↓ scrolling keys.

Quik-Start Setup

Refer to Table 5-1 for a quick start up for basic regulation. Please note the following Function Code information when using the Quik-Start settings.

99 Security Function Code and password needs to be applied before changes can be made to parameters.

39 Source-Side Voltage needs to be turned on for Reverse Power Flow operation if source-side calculations are to be used instead of an internal differential potential transformer for source-side voltage.

140 Regulator Type A or B needs to be set for Type A (Straight Design) or Type B (Inverted Design) when function code 39 is on.

41 Regulator Configuration needs to be programmed when a control change-out is required.

43 System Line Voltage needs to be programmed when a control change-out is required.

44 Overall PT Ratio needs to be programmed when a control change-out is required.

45 CT Primary Rating needs to be programmed when a control change-out is required.

49 Tap-Changer Section needs to be programmed when a control change-out is required.

50 Calendar/Clock needs to be programmed when a control change-out is required or if power has been lost for more than 24 hours.

69 Blocking Status needs to be tuned off for the regulator to operate in the automatic mode.

TABLE 5-1
Quik-Start Set-Up for Basic Regulation

Function Code	Description	Instructions
Security		
099	Security	Function, 99, Enter, *Password (32123)*, Enter
Forward Settings		
001	Forward Set Voltage	Function, 1, Enter, Edit, *Value*, Enter
002	Forward Bandwidth	Function, 2, Enter, Edit, *Value*, Enter
003	Forward Time Delay	Function, 3, Enter, Edit, *Value*, Enter
004	Forward LDC Resistance	Function, 4, Enter, Edit, *Value*, Enter
005	Forward LDC Reactance	Function, 5, Enter, Edit, *Value*, Enter
Reverse Settings		
056	Reverse Power Mode	Function, 56, Enter, Edit, *Value*, Enter
039	Source Side Voltage	Function, 39, Enter, Edit, Scroll-*ON or Off*, Enter
140	Regulator Type A or B	Function, 140, Enter, Edit, Scroll-**Type A or Type B**, Enter
051	Reverse Set Voltage	Function, 51, Enter, Edit, *Value*, Enter
052	Reverse Bandwidth	Function, 52, Enter, Edit, *Value*, Enter
053	Reverse Time Delay	Function, 53, Enter, Edit, *Value*, Enter
054	Reverse LDC Resistance	Function, 54, Enter, Edit, *Value*, Enter
055	Reverse LDC Reactance	Function, 55, Enter, Edit, *Value*, Enter
Configurations		
041	Regulator Configuration	Function, 41, Enter, Edit, Scroll–*Wye, Delta Lag, Delta Lead*, Enter
042	Control Operation Mode	Function, 42, Enter, Edit, Scroll–*Sequential, Time-Integrating, Voltage-Averaging*, Enter
043	System Line Voltage	Function, 43, Enter, Edit, *Value*, Enter
044	Overall PT Ratio	Function, 44, Enter, Edit, *Value*, Enter
045	CT. Primary Rating	Function, 45, Enter, Edit, *Value*, Enter
049	Tap-Changer Section	Function, 49, Enter, Edit, Scroll–*Spring, Direct, Quick, GE, Siemens, Toshiba*, Enter
050	Calendar/Clock	Function, 50, Enter, Edit, *Month, Day, Year, Hour, Minute*, Enter
069	Blocking Status	Function, 69, Enter, Edit, Scroll–ON or Off, Enter
Voltage Reduction		
070	Voltage Reduction	Function, 70, Enter, Edit, *Value*, Enter
072	Local/Digital Reduction Mode	Function, 72, Enter, Edit, *Value*, Enter
073	Remote Reduction	Function, 73, Enter, Edit, *Value*, Enter
074	Remote Reduction	Function, 74, Enter, Edit, *Value*, Enter
075	Remote Reduction	Function, 75, Enter, Edit, *Value*, Enter
076	# of Pulse Reduction Steps	Function, 76, Enter, Edit, *Value*, Enter
077	% of Voltage Reduction Per Pulse Step	Function, 77, Enter, Edit, *Value*, Enter
Voltage Limiter		
080	Voltage-Limiting Mode	Function, 80, Enter, Scroll-*High Limit Only, High/Low Limit*, Enter
081	High Voltage Limit	Function, 81, Enter, Edit, *Value*, Enter
082	High/Low Limit	Function, 82, Enter, Edit, *Value*, Enter

Function Menu

Refer to Table 5-2 for the three levels of the nested menu structure: Main Menu, Sub-Menu, and Parameter levels.

TABLE 5-2
Function Menu

Level 1 Main Menu	Level 2 Sub-Menu	Parameter	Code
*Settings	*Forward Direction	Forward Set Voltage	001
		Forward Bandwidth	002
		Forward Time Delay	003
		Forward Line Drop, Comp. Resistance	004
		Forward Line Drop, Comp. Reactance	005
	*Reverse Direction	Reverse Set Voltage	051
		Reverse Bandwidth	052
		Reverse Time Delay	053
		Reverse Line Drop, Comp. Resistance	054
		Reverse Line Drop, Comp. Reactance	055
	*Configuration	Regulator Identification	040
		Regulator Type	140
		Tap-Changer Type	049
		Regulator Configuration	041
		Control Operating Mode	042
		System Line Voltage	043
		Overall PT Ratio	044
		CT Primary Rating	045
		Demand Time Interval	046
		P.I. ADD-AMP, High Limit	144
		P.I. ADD-AMP, Low Limit	145
		V_{in} PT, Configuration	146
	*Calendar/Clock	System Calendar and Time	050
	_Menu System	Language Selection	141
		Date Format	142
		Time Format	143
*Features	*Auto Block Status	Auto Operation, Blocking Status	069
	*Reverse Power Mode	Reverse Sensing Mode	056
		Reverse Current, Sense Threshold	057
	*Source Side, Voltage Calculation	Source Voltage Calculation	039
	*Voltage Limiter	Voltage Limiter Mode	080
		High Voltage Limit	081
		Low Voltage Limit	082
	*Voltage Reduction	Voltage Reduction Mode	070
		Reduction in Effect	071
		Local/Digital Reduction Value	072
		Remote #1 Value	073

TABLE 5-2, cont.
Function Menu

Level 1 Main Menu	Level 2 Sub-Menu	Parameter	Code
*Features, cont.			
	*Voltage Reduction, cont.	Remote #2 Value	075
		Remote #3 Value	074
		# of Pulse Reduction Steps	076
		% of Voltage Reduction per Pulse Step	077
	*Tap to Neutral	Tap to Neutral	170
	*SOFT-ADD-AMP	SOFT-ADD-AMP Limits	079
		SOFT-ADD-AMP, High Limit	175
		SOFT-ADD-AMP, Low Limit	176
	*Communications	Com Port #1, Protocol	060
		Com Port #1, Speed	061
		Com Port #1, Sync Time	062
		Com Port #1, DNP Master Address	063
		Com Port #1, DNP Remote Address #1	064
		Com Port #1, DNP Remote Address #2	064
		Com Port #1, 2179 Remote Address #1	064
		Com Port #1, Handshake Mode	065
		Com Port #1, Tx Enable Delay	066
		Com Port #1, Tx Disable Delay	067
		Com Port #1, 2179 Ordinal Map	266
		Com Port #1, DNP Data Dict	267
		Com Port #2, Protocol	160
		Com Port #2, Speed	161
		Com Port #2, Sync Time	162
		Com Port #2, DNP Master Address	163
		Com Port #2, DNP Remote Address #1	164
		Com Port #2, DNP Remote Address #2	164
		Com Port #2, 2179 Remote Address #1	164
		Com Port #2, Handshake Mode	165
		Com Port #2, Tx Enable Delay	166
		Com Port #2, Tx Disable Delay	167
		Com Port #2, 2179 Ordinal Map	268
		Com Port #2, DNP Data Dict	269
	*Calibration	Voltage Calibration	047
		Current Calibration	048
		Reset Calibration	150
	*Compact Flash	Compact Flash Data Writer	350
		Compact Flash, Load Custom Configuration	351
		Compact Flash, Load Standard Configuration	352
		Compact Flash, Save Custom Configuration	353
		Compact Flash, Save Standard Configuration	354
		Compact Flash, Format CF Card	355
	_Security Access	Security Override	092
		Security Code, Level 1	096
		Security Code, Level 2	097
		Security Code, Level 3	098

TABLE 5-2, cont.
Function Menu

Level 1 Main Menu	Level 2 Sub-Menu	Parameter	Code
*Counters	*Operations Counter	Total Operations	000
		Last Counter Change	100
		Enable Interval Counters	107
		Last 24 Hours Operations	101
		Last 30 Days Operations	102
		Current Month Operations	103
		Last Month Operations	104
		Current Year Operations	105
		Last Year Operations	106
*Metering	*Instantaneous	Load Voltage, Secondary	006
		Source Voltage, Secondary	007
		Comp. Voltage, Secondary	008
		Load Current, Primary	009
		Load Voltage, Primary	010
		Source Voltage, Primary	011
		Present Tap Position	012
		Percent Regulation	112
		Power Factor	013
		kVA Load	014
		kW Load	015
		kvar Load	016
		Line Frequency	017
		Voltage THD	018
		Voltage, 2nd–15th Harmonic	018
		Current THD	019
		Current, 2nd–15th Harmonic	019
		Energy kW·h, Forward	125
		Energy kW·h, Reverse	125
		Energy kvar·h, Forward	126
		Energy kvar·h, Reverse	126
	*Forward Demand	Load Voltage, High	020
		Load Voltage, Low	020
		Load Voltage, Present	020
		Comp. Voltage, High	021
		Comp. Voltage, Low	021
		Comp. Voltage, Present	021
		Load Current, High	022
		Load Current, Low	022
		Load Current, Present	022
		Power Factor at Max kVA, High	023
		Power Factor at Min kVA, Low	023
		kVA Load, High	024
		kVA Load, Low	024
		kVA Load, Present	024
		kW Load, High	025
		kW Load, Low	025
		kW Load, Present	025
		kvar Load, High	026
		kvar Load, Low	026
		kvar Load, Present	026

TABLE 5-2, cont.
Function Menu

Level 1 Main Menu	Level 2 Sub-Menu	Parameter	Code
*Metering, cont.	*Forward Demand, cont.	Maximum Tap Position	027
		Maximum % Boost	127
		Minimum Tap Position	028
		Maximum % Buck	128
		Source Voltage, High	029
		Source Voltage, Low	029
		Source Voltage, Present	029
	*Reverse Demand	Load Voltage, High	030
		Load Voltage, Low	030
		Load Voltage, Present	030
		Comp. Voltage, High	031
		Comp. Voltage, Low	031
		Comp. Voltage, Present	031
		Load Current, High	032
		Load Current, Low	032
		Load Current, Present	032
		Power Factor at Max. kVA, High	033
		Power Factor at Min. kVA, Low	033
		kVA Load, High	034
		kVA Load, Low	034
		kVA Load, Present	034
		kW Load, High	035
		kW Load, Low	035
		kW Load, Present	035
		kvar Load, High	036
		kvar Load, Low	036
		kvar Load, Present	036
		Source Voltage, High	037
		Source Voltage, Low	037
		Source Voltage, Present	037
	_Master Reset	Demand Master Reset	038
*Alarms/Events	*Alarms Active Unacknowledged	System Alarm #1 Active	–
	*Alarms Active Acknowledged	System Alarm #2 Active	–
	_Events	System Event #1	–
*Diagnostics	*Control	Firmware Version	089
		Database Version	189
		PLD Version	190
		Self-Test	091
	*Communications	Com Port #1, Tx Messages	260
		Com Port #1, Rx Messages	261
		Com Port #1, Rx Errors	262
		Com Port #2, Tx Messages	263
		Com Port #2, Rx Messages	264
		Com Port #2, Rx Errors	265

TABLE 5-2, cont.
Function Menu

Level 1 Main Menu	Level 2 Sub-Menu	Parameter	Code
*Diagnostics, cont.	*Maintenance	PMT Mode A, State	300
		PMT Mode A, Countdown Delay	301
		PMT Mode A, Time Delay	302
		PMT Mode A, Issue Test	303
		PMT Mode B, State	320
		PMT Mode B, Countdown Delay	321
		PMT Mode B, Time Delay	322
		PMT Mode B, Start Time	323
		PMT Mode B, Stop Time	324
		PMT Mode B, Max.Deviation	325
		PMT Mode B, Designation	326
		PMT Mode B, Current Limit	327
		PMT Mode B, Issue Test	328
		Duty Cycle Monitor	333
	_Metering PLUS	Comp. Voltage	–
		Load Voltage	–
		Load Current	–
		Tap Position	–
*Test LEDs	No Items		–
*Turn Display Off	No Items		–

Function Codes

Refer to Table 5-3 for a numerical listing of the function codes. The table accurately represents the display of each function code and identifies the security level for read, edit, and reset, the factory setting, and the low and high limits for keyed in entries. This is followed by a description and, where appropriate, a list of scrollable choices, examples, and related functions and features for each function code.

TABLE 5-3
Function Codes

Func. Code	Level 1 Main Menu	Level 2 Sub-Menu	Level 3 Parameter	Security Level Read	Edit	Reset	Factory Setting	Key Entry Limit Low	High
0	Counters	Operations Counter	000 Total Operations XXXXX	0	3	NA	NA	0	999999
• The total operations counter is activated by detecting tap-changer motor operation, which is determined by sensing current flow in the holding switch circuit. • The total operations counter is written into non-volatile memory after every count. • Access other operations counters at FC 100–FC 107.									
1	Settings	Forward Direction	001 Forward Set Voltage 120.0 Volts	0	2	NA	120.0	100.0	135.0
• The forward set voltage is the voltage level to which the control will regulate, on the 120 V base, during forward power flow.									
2	Settings	Forward Direction	002 Forward Bandwidth 2.0 Volts	0	2	NA	2.0	1.0	6.0
• The bandwidth is defined as the total voltage range, around the set voltage, which the control will consider as a satisfied (in-band) condition, during forward power flow. • Example: A bandwidth of 3.0 V and a set voltage of 120 V will establish a low edge of 118.5 V and a high edge of 121.5 V.									
3	Settings	Forward Direction	003 Forward Time Delay 45 Sec	0	2	NA	45	5	180
• The time delay is the period of time that the control waits, from when the voltage first goes out-of-band to when a tap change is initiated, during forward power flow. • See FC 42, Control Operating Mode.									
4	Settings	Forward Direction	001 Fwd Line Drop Comp. Resistance 0.0 Volts	0	2	NA	0.0	-96.0	96.0
• The resistive line-drop compensation value is used to model the resistive line voltage drop between the regulator and the center of regulation. • The control uses this parameter, in conjunction with the regulator configuration (FC 41) and the load current, to calculate and regulate to the compensated voltage (displayed at FC 8) during forward power flow.									

TABLE 5-3, cont.
Function Codes

Func. Code	Level 1 Main Menu	Level 2 Sub-Menu	Level 3 Parameter	Security Level Read	Edit	Reset	Factory Setting	Key Entry Limit Low	High
5	Settings	Forward Direction	005 Fwd Line Drop Comp. Reactance 0.0 Volts	0	2	NA	0.0	-96.0	96.0
• The reactive line-drop compensation value is used to model the reactive line drop voltage between the regulator and the center of regulation. • The control uses this parameter, in conjunction with the regulator configuration (FC 41) and the load current, to calculate and regulate to the compensated voltage (displayed at FC 8) during forward power flow.									
6	Metering	Instantaneous	006 Load Voltage Secondary XXX.X Volts	0	NA	NA	NA	NA	NA
• This is the fundamental RMS voltage, referred to the secondary, which appears at the output (load) terminals of the regulator. • Since ratio correction is performed by the firmware, this parameter is scaled according to the inputs at FC 43 (System Line Voltage) and FC 44 (Overall PT Ratio). • During reverse power operation, the control requires source voltage from a differential or source potential transformer or from the source voltage calculation (see FC 39) to obtain this parameter. Lack of this voltage will result in the parameter displaying dashes.									
7	Metering	Instantaneous	007 Source Voltage Secondary XXX.X Volts	0	NA	NA	NA	NA	NA
• This is the fundamental RMS voltage, referred to the secondary, which appears at the input (source) terminals of the regulator. • Since ratio correction is performed by the firmware, this parameter is scaled according to the inputs at FC 43 (System Line Voltage) and FC 44 (Overall PT Ratio). • During forward power operation, the control requires source voltage from a differential or source potential transformer or from the source voltage calculation (see FC 39) to obtain this parameter. Lack of this voltage will result in the parameter displaying dashes.									
8	Metering	Instantaneous	008 Compensated Volt. Secondary XXX.X Volts	0	NA	NA	NA	NA	NA
• This is the calculated voltage at the center of regulation, referred to the secondary. • This is based on the resistive compensation setting (FC 4 or FC 54), reactive compensation setting (FC 5 or FC 55), and the load current. • This is the voltage that the regulator is regulating during either forward or reverse power flow. • During reverse power operation, the control requires source voltage from a differential or source potential transformer or from the source voltage calculation (see FC 39) to obtain this parameter. Lack of this voltage will result in the parameter displaying dashes.									
9	Metering	Instantaneous	009 Load Current Primary XXX.X A	0	NA	NA	NA	NA	NA
• This is the fundamental RMS current flowing in the primary circuit. • This parameter is scaled according to the CT primary rating which is entered at FC 45. • During reverse power operation, the control requires source voltage from a differential or source potential transformer or from the source voltage calculation (see FC 39) to obtain this parameter. Lack of this voltage will result in the parameter displaying dashes.									

TABLE 5-3, cont.
Function Codes

Func. Code	Level 1 Main Menu	Level 2 Sub-Menu	Level 3 Parameter	Security Level Read	Edit	Reset	Factory Setting	Key Entry Limit Low	High
10	Metering	Instantaneous	010 Load Voltage Primary kV XX.XX kV	0	NA	NA	NA	NA	NA
• This is the fundamental RMS voltage, referred to the primary, which appears at the output (load) terminals of the regulator. • During reverse power operation, the control requires source voltage from a differential or source potential transformer or from the source voltage calculation (see FC 39) to obtain this parameter. Lack of this voltage will result in the parameter displaying dashes.									
11	Metering	Instantaneous	011 Source Voltage Primary kV XX.XX kV	0	NA	NA	NA	NA	NA
• This is the fundamental RMS voltage, referred to the primary, which appears at the input (source) terminals of the regulator. • Since ratio correction is performed by the firmware, this parameter is scaled according to the inputs at FC 43 (System Line Voltage) and FC 44 (Overall PT ratio). • During forward power operation, the control requires source voltage from a differential or source potential transformer or from the source voltage calculation (see FC 39) to obtain this parameter. Lack of this voltage will result in the parameter displaying dashes.									
12	Metering	Instantaneous	012 Present Tap Position XX	0	3	NA	NA	-16	16
• This is the present position of the tap-changer. • The tap position indication is synchronized at the neutral position, as indicated by the neutral light circuit. Tap positions are displayed from -16 to 16, corresponding to 16 Lower (regulator bucking) to 16 Raise (regulator boosting), respectively. • See the **Control Features: Tap Position** section of this manual. • See Percent Regulation, FC 112.									
13	Metering	Instantaneous	013 Power Factor X.XXX	0	NA	NA	NA	NA	NA
• This is the power factor of the primary circuit, as represented by the phase difference between the line current and voltage. • Lagging current, or inductive loads, are designated by an implied (+) sign, and leading current, or capacitive loads, are designated by a (-) sign. Refer to Figures 5-1 and 5-2.									

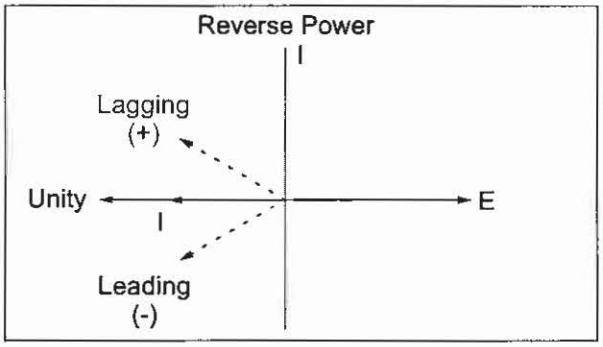

Figure 5-1.
Reverse power vector diagram.

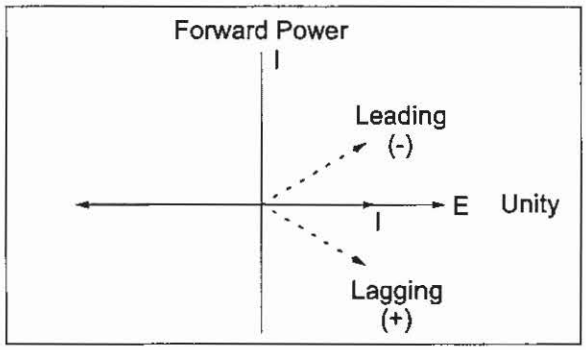

Figure 5-2.
Forward power vector diagram.

TABLE 5-3, cont.
Function Codes

Func. Code	Level 1 Main Menu	Level 2 Sub-Menu	Level 3 Parameter	Security Level Read	Edit	Reset	Factory Setting	Key Entry Limit Low	High
14	Metering	Instantaneous	014 kVA Load XXXX.X kVA	0	NA	NA	NA	NA	NA

- This is the total kilovolt-amperes drawn by the load, as calculated by the product of the load-voltage primary kV (FC 10) times the primary load current (FC 9). See Figure 5-3.

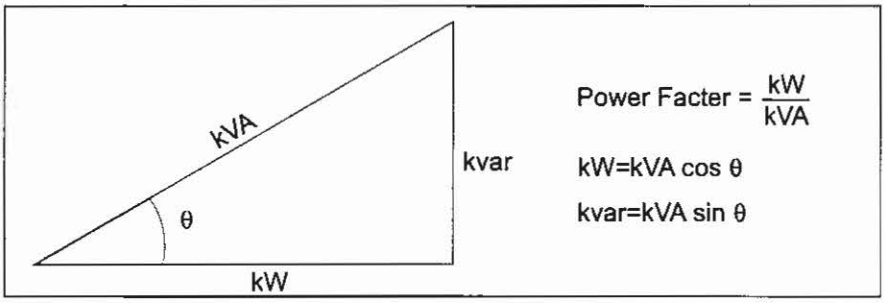

Figure 5-3.
Power Triangle.

15	Metering	Instantaneous	015 kW Load XXXX.X kW	0	NA	NA	NA	NA	NA

- This is the total kilowatts (true power) consumed by the load.
- This is calculated by the product of the power factor (FC 13) times the kVA load (FC 14). See Figure 5-3.
- During reverse power operation, the control requires source voltage from a differential or source potential transformer or from the source voltage calculation (see FC 39) to obtain this parameter. Lack of this voltage will result in the parameter displaying dashes.

16	Metering	Instantaneous	016 kvar Load XXXX.X kvar	0	NA	NA	NA	NA	NA

- This is the total kilovolt-amperes reactive (reactive power) drawn by the load. The reactive power adds to losses on the line, yet does not do any work. See Figure 5-3.
- During reverse power operation, the control requires source voltage from a differential or source potential transformer or from the source voltage calculation (see FC 39) to obtain this parameter. Lack of this voltage will result in the parameter displaying dashes.

17	Metering	Instantaneous	017 Line Frequency XX.XX Hz	0	NA	NA	NA	NA	NA

- This is the frequency of the power line, as measured by the control.
- The control is capable of operating on systems from 45 to 65 Hz with no loss of accuracy in its measurements.

18	Metering	Instantaneous	018 Voltage THD XX.X %	0	NA	NA	NA	NA	NA

- The total harmonic distortion (THD) is displayed after entering FC 18.
- The total harmonic distortion is computed as the RSS (square root of the sum of the squares) of the individual harmonic values.
- The is displayed as a percentage of the fundamental RMS voltage.
- Example: 120.0 V of 60 Hz fundamental (power line frequency), with a reading of 0.5 at the 7th harmonic (420 Hz), is 0.6 V RMS.

TABLE 5-3, cont.
Function Codes

Func. Code	Level 1 Main Menu	Level 2 Sub-Menu	Level 3 Parameter	Security Level Read	Security Level Edit	Security Level Reset	Factory Setting	Key Entry Limit Low	Key Entry Limit High
18↓	Metering	Instantaneous	018 Voltage 2nd-15th Harmonic XX.X %	0	NA	NA	NA	NA	NA
• The values of the 2nd through 15th harmonic are displayable. • Use the arrow keys to scroll through the 2nd through 15th harmonic.									
19	Metering	Instantaneous	019 Current THD XXX.X %	0	NA	NA	NA	NA	NA
• The total harmonic distortion (THD) is displayed after entering FC 19. • The total harmonic distortion is computed as the RSS (square root of the sum of the squares) of the individual harmonic values. • This is displayed as a percentage of the fundamental RMS voltage. • Example: 200 A of 60 Hz fundamental (power line frequency), with a reading of 1.9 at the 5th harmonic (300 Hz), is 3.8 A RMS.									
19↓	Metering	Instantaneous	019 Current 2nd-15th Harmonic XX.X %	0	NA	NA	NA	NA	NA
• The values of the 2nd through 15th harmonic are displayable. • Use the arrow keys to scroll through the 2nd through 15th harmonic.									
20	Metering	Forward Demand	020 Forward Load Voltage High XXX.X Volts (Date / Time shown)	0	NA	1	NA	NA	NA
• This is the highest secondary output voltage of the regulator (since last reset), as a demand value, according to the demand time interval at FC 46. • Date and time of the occurrence of the highest secondary output voltage is displayed.									
20↓	Metering	Forward Demand	020 Forward Load Voltage Low XXX.X Volts (Date / Time shown)	0	NA	1	NA	NA	NA
• This is the lowest secondary output voltage of the regulator (since last reset), as a demand value, according to the demand time interval at FC 46. • Date and time of the occurrence of the lowest load voltage is displayed.									
20↓	Metering	Forward Demand	020 Forward Load Voltage Present XXX.X Volts	0	NA	NA	NA	NA	NA
• This is the present reading of secondary output voltage of the regulator, as a demand value, according to the demand time interval at FC 46.									

TABLE 5-3, cont.
Function Codes

Func. Code	Level 1 Main Menu	Level 2 Sub-Menu	Level 3 Parameter	Security Level Read	Edit	Reset	Factory Setting	Key Entry Limit Low	High
21	Metering	Forward Demand	021 Fwd Compensated Voltage High XXX.X Volts (Date / Time shown)	0	NA	1	NA	NA	NA
• This is the highest value of the calculated secondary voltage at the center of regulation (since the last reset), as a demand value, according to the demand time interval at FC 46. • The forward line-drop compensation settings for resistance and reactance (FC 4 and FC 5) are used in this calculation. • Date and time of the occurrence of the highest compensated voltage is displayed.									
21↓	Metering	Forward Demand	021 Fwd Compensated Voltage Low XXX.X Volts	0	NA	1	NA	NA	NA
• This is the lowest value of the calculated secondary voltage at the load center (since the last reset), as a demand value, according to the demand time interval at FC 46. • The forward line-drop compensation settings for resistance and reactance (FC 4 and FC 5) are used in this calculation. • Date and time of the occurrence of the lowest compensated voltage is displayed.									
21↓	Metering	Forward Demand	021 Fwd Compensated Voltage Present XXX.X Volts	0	NA	NA	NA	NA	NA
• This is the present value of the calculated secondary output voltage of the load center, as a demand value, according to the demand time interval at FC 46. • The forward line-drop compensation settings for resistance and reactance (FC 4 and FC 5) are used in this calculation.									
22	Metering	Forward Demand	022 Forward Load Current High XXX.X A (Date / Time shown)	0	NA	1	NA	NA	NA
• This is the highest value of the load current (since last reset), as a demand value, according to the demand time interval at FC 46. • Date and time of the occurrence of the highest load current is displayed.									
22↓	Metering	Forward Demand	022 Forward Load Current Low XXX.X A (Date / Time shown)	0	NA	1	NA	NA	NA
• This is the lowest value of the load current (since last reset), as a demand value, according to the demand time interval at FC 46. • Date and time of the occurrence of the lowest load current is displayed.									
22↓	Metering	Forward Demand	022 Forward Load Current Present XXX.X A	0	NA	NA	NA	NA	NA
• This is the present value of the load current, as a demand value, according to the demand time interval at FC 46.									

TABLE 5-3, cont.
Function Codes

Func. Code	Level 1 Main Menu	Level 2 Sub-Menu	Level 3 Parameter	Security Level Read	Edit	Reset	Factory Setting	Key Entry Limit Low	High
23	Metering	Forward Demand	023 Power Factor at Max Forward kVA X.XX (Date / Time shown)	0	NA	NA	NA	NA	NA
• This is the instantaneous power factor of the load at the first time when the maximum kVA demand occurred, since last reset. • Date and time of the occurrence of the highest maximum kVA demand is displayed. • **Note:** This parameter is associated with the maximum kVA demand; therefore, it cannot be reset independent of that parameter.									
23↓	Metering	Forward Demand	023 Power Factor at Min Forward kVA X.XX (Date / Time shown)	0	NA	NA	NA	NA	NA
• This is the instantaneous power factor of the load at the first time when the minimum kVA demand occurred (since last reset). • Date and time of the occurrence of the lowest minimum kVA demand is displayed. • **Note:** This parameter is associated with the minimum kVA demand; therefore, it cannot be reset independent of that parameter.									
024	Metering	Forward Demand	024 Forward kVA Load High XXXX.X kVA (Date / Time shown)	0	NA	1	NA	NA	NA
• This is the highest value of the load kVA (since last reset), as a demand value, according to the demand time interval at FC 46. • Date and time of the occurrence of the highest kVA load is displayed.									
24↓	Metering	Forward Demand	024 Forward kVA Load Low XXXX.X kVA (Date / Time shown)	0	NA	1	NA	NA	NA
• This is the lowest value of the load kW (since last reset), as a demand value, according to the demand time interval at FC 46. • Date and time of the occurrence of the lowest kVA load is displayed.									
24↓	Metering	Forward Demand	024 Forward kVA Load Present XXXX.X kVA	0	NA	NA	NA	NA	NA
• This is the present value of the load kVA, as a demand value, according to the demand time interval at FC 46.									
25	Metering	Forward Demand	025 Forward kW Load High XXXX.X kW (Date / Time shown)	0	NA	1	NA	NA	NA
• This is the highest value of the load kW (since last reset), as a demand value, according to the demand time interval at FC 46. • Date and time of the occurrence of the highest kW load is displayed.									
25↓	Metering	Forward Demand	025 Forward kW Load Low XXXX.X kW (Date / Time shown)	0	NA	1	NA	NA	NA
• This is the lowest value of the load kW (since last reset), as a demand value, according to the demand time interval at FC 46. • Date and time of the occurrence of the lowest kW load is displayed.									

TABLE 5-3, cont.
Function Codes

Func. Code	Level 1 Main Menu	Level 2 Sub-Menu	Level 3 Parameter	Security Level Read	Edit	Reset	Factory Setting	Key Entry Limit Low	High
25↓	Metering	Forward Demand	025 Forward kW Load Present XXXX.X kW	0	NA	NA	NA	NA	NA
• This is the present value of the load kW, as a demand value, according to the demand time interval at FC 46.									
26	Metering	Forward Demand	026 Forward kvar Load High XXXX.X kvar (Date / Time shown)	0	NA	1	NA	NA	NA
• This is the highest value of the load kvar (since last reset), as a demand value, according to the demand time interval at FC 46. • Date and time of when the lowest value occurred is displayed.									
26↓	Metering	Forward Demand	026 Forward kvar Load Low XXXX.X kvar (Date / Time shown)	0	NA	1	NA	NA	NA
• This is the lowest value of the load kvar (since last reset), as a demand value, according to the demand time interval at FC 46. • Date and time of the occurrence of the lowest kvar load displayed.									
26↓	Metering	Forward Demand	026 Forward kvar Load Present XXX.X kvar	0	NA	NA	NA	NA	NA
• This is the present value of the load kvar, as a demand value, according to the demand time interval at FC 46.									
27	Metering	Forward Demand	027 Maximum Tap Position XX (Date / Time shown)	0	NA	1	NA	NA	NA
• This is the highest tap position that the regulator has reached since last reset. • The maximum position and associated date and time can be reset via the reset key or via master reset, FC 38. This parameter is not reset by the drag-hand reset switch. • Date and time of the occurrence of the maximum tap position is displayed.									
28	Metering	Forward Demand	028 Minimum Tap Position XX (Date / Time shown)	0	NA	1	NA	NA	NA
• This is the lowest tap position that the regulator has reached (since last reset). • The minimum position and associated date and time can be reset via the reset key or via master reset, FC 38. This parameter is not reset by the drag-hand reset switch. • Date and time of the occurrence of the minimum tap position is displayed.									

TABLE 5-3, cont.
Function Codes

Func. Code	Level 1 Main Menu	Level 2 Sub-Menu	Level 3 Parameter	Security Level Read	Edit	Reset	Factory Setting	Key Entry Limit Low	High
029	Metering	Forward Demand	029 Forward Source Voltage High XXX.X Volts (Date / Time shown)	0	NA	1	NA	NA	NA
• This is the maximum source voltage of the regulator (since last reset), as a demand value, according to the demand time interval at FC 46. • Date and time of the occurrence of the highest source voltage is displayed. • The control requires source voltage from a differential or source potential transformer or from the source voltage calculation (see FC 39) to obtain this parameter. Lack of this voltage will result in the parameter displaying dashes.									
29↓	Metering	Forward Demand	029 Forward Source Voltage Low XXX.X Volts (Date / Time shown)	0	NA	1	NA	NA	NA
• This is the minimum source voltage of the regulator (since last reset), as a demand value, according to the demand time interval at FC 46. • Date and time of the occurrence of the lowest source voltage is displayed. • The control requires source voltage from a differential or source potential transformer or from the source voltage calculation (see FC 39) to obtain this parameter. Lack of this voltage will result in the parameter displaying dashes.									
29↓	Metering	Forward Demand	029 Forward Source Voltage Present XXX.X Volts	0	NA	NA	NA	NA	NA
• This is the present value of the source voltage, as a demand value, according to the demand time interval at FC 46. • The control requires source voltage from a differential or source potential transformer or from the source voltage calculation (see FC 39) to obtain this parameter. Lack of this voltage will result in the parameter displaying dashes.									
30	Metering	Reverse Demand	030 Reverse Load Voltage High XXX.X Volts (Date / Time shown)	0	NA	1	NA	NA	NA
• This is the maximum value of the secondary output voltage of the regulator during reverse power flow (since last reset), as a demand value, according to the demand time interval at FC 46. • Date and time of the occurrence of the highest load voltage is displayed. • The control requires source voltage from a differential or source potential transformer or from the source voltage calculation (see FC 39) to obtain this parameter. Lack of this voltage will result in the parameter displaying dashes.									
30↓	Metering	Reverse Demand	030 Reverse Load Voltage Low XXX.X Volts (Date / Time shown)	0	NA	1	NA	NA	NA
• This is the minimum value of the secondary output voltage of the regulator during reverse power flow (since last reset), as a demand value, according to the demand time interval at FC 46. • Date and time of the occurrence of the lowest load voltage is displayed. • The control requires source voltage from a differential or source potential transformer or from the source voltage calculation (see FC 39) to obtain this parameter. Lack of this voltage will result in the parameter displaying dashes.									
30↓	Metering	Reverse Demand	030 Reverse Load Voltage Present XXX.X Volts	0	NA	NA	NA	NA	NA
• This is the present value of the secondary output voltage of the regulator during reverse power flow, as a demand value, according to the demand time interval at FC 46. • The control requires source voltage from a differential or source potential transformer or from the source voltage calculation (see FC 39) to obtain this parameter. Lack of this voltage will result in the parameter displaying dashes.									

TABLE 5-3, cont.
Function Codes

Func. Code	Level 1 Main Menu	Level 2 Sub-Menu	Level 3 Parameter	Security Level Read	Edit	Reset	Factory Setting	Key Entry Limit Low	High
31	Metering	Reverse Demand	031 Rev Compensated Voltage High XXX.X Volts (Date / Time shown)	0	NA	1	NA	NA	NA

- This is the highest value of the calculated secondary voltage at the center of regulation during reverse power flow (since last reset), as a demand value, according to the demand time interval at FC 46.
- The reverse line-drop compensation settings for resistance and reactance (FC 54 and FC 55) are used in this calculation.
- Date and time of the occurrence of the highest compensated is displayed.
- The control requires source voltage from a differential or source potential transformer or from the source voltage calculation (see FC 39) to obtain this parameter. Lack of this voltage will result in the parameter displaying dashes.

31↓	Metering	Reverse Demand	031 Rev Compensated Voltage Low XXX.X Volts (Date / Time shown)	0	NA	1	NA	NA	NA

- This is the lowest value of the calculated secondary voltage at the load center during reverse power flow (since last reset), as a demand value, according to the demand time interval at FC 46.
- The reverse line-drop compensation settings for resistance and reactance (FC 54 and FC 55) are used in this calculation.
- Date and time of the occurrence of the lowest compensated voltage is displayed.
- The control requires source voltage from a differential or source potential transformer or from the source voltage calculation (see FC 39) to obtain this parameter. Lack of this voltage will result in the parameter displaying dashes.

31↓	Metering	Reverse Demand	031 Rev Compensated Voltage Present XXX.X Volts	0	NA	NA	NA	NA	NA

- This is the present value of the calculated secondary load center during reverse power flow), as a demand value, according to the demand time interval at FC 46.
- The reverse line-drop compensation settings for resistance and reactance (FC 54 and FC 55) are used in this calculation.
- The control requires source voltage from a differential or source potential transformer or from the source voltage calculation (see FC 39) to obtain this parameter. Lack of this voltage will result in the parameter displaying dashes.

32	Metering	Reverse Demand	032 Load Current High XXX.X A (Date / Time shown)	0	NA	1	NA	NA	NA

- This is the highest value of the load current during reverse power flow (since the last reset), as a demand value, according to the demand time interval at FC 46.
- Date and time of the occurrence of the highest load current is displayed.
- The control requires source voltage from a differential or source potential transformer or from the source voltage calculation (see FC 39) to obtain this parameter. Lack of this voltage will result in the parameter displaying dashes.

32↓	Metering	Reverse Demand	032 Load Current Low XXX.X A (Date / Time shown)	0	NA	1	NA	NA	NA

- This is the lowest value of the load current during reverse power flow (since the last reset), as a demand value, according to the demand time interval at FC 46.
- Date and time of the occurrence of the lowest load current is displayed.
- The control requires source voltage from a differential or source potential transformer or from the source voltage calculation (see FC 39) to obtain this parameter. Lack of this voltage will result in the parameter displaying dashes.

TABLE 5-3, cont.
Function Codes

Func. Code	Level 1 Main Menu	Level 2 Sub-Menu	Level 3 Parameter	Security Level Read	Edit	Reset	Factory Setting	Key Entry Limit Low	High
32↓	Metering	Reverse Demand	032 Load Current Present XXX.X A	0	NA	NA	NA	NA	NA
• This is the present value of the load current during reverse power flow (since the last reset), as a demand value, according to the demand time interval at FC 46. • The control requires source voltage from a differential or source potential transformer or from the source voltage calculation (see FC 39) to obtain this parameter. Lack of this voltage will result in the parameter displaying dashes.									
33	Metering	Reverse Demand	033 Power Factor at Max Reverse kVA X.XX (Date / Time shown)	0	NA	NA	NA	NA	NA
• This is the instantaneous power factor of the load at the first time the maximum kVA demand occurred (since the last reset), during reverse power flow. • **Note:** This parameter is associated with the maximum kVA demand; therefore, it cannot be reset independent of that parameter. • The control requires source voltage from a differential or source potential transformer or from the source voltage calculation (see FC 39) to obtain this parameter. Lack of this voltage will result in the parameter displaying dashes.									
33↓	Metering	Reverse Demand	033 Power Factor at Min Reverse kVA X.XX (Date / Time shown)	0	NA	NA	NA	NA	NA
• This is the instantaneous power factor of the load at the first time the minimum kVA demand occurred during reverse power flow since last reset. • **Note:** This parameter is associated with the minimum kVA demand; therefore, it cannot be reset independent of that parameter. • The control requires source voltage from a differential or source potential transformer or from the source voltage calculation (see FC 39) to obtain this parameter. Lack of this voltage will result in the parameter displaying dashes.									
34	Metering	Reverse Demand	034 Reverse kVA Load High XXXX.X kVA (Date / Time shown)	0	NA	1	NA	NA	NA
• This is the highest value of the load kVA during reverse power flow (since last reset), as a demand value, according to the demand time interval at FC 46. • Date and time of the occurrence of the highest kVA load is displayed. • The control requires source voltage from a differential or source potential transformer or from the source voltage calculation (see FC 39) to obtain this parameter. Lack of this voltage will result in the parameter displaying dashes.									
34↓	Metering	Reverse Demand	034 Reverse kVA Load Low XXXX.X kVA (Date / Time shown)	0	NA	1	NA	NA	NA
• This is the lowest value of the load kVA during reverse power flow (since last reset), as a demand value, according to the demand time interval at FC 46. • Date and time of the occurrence the lowest kVA load is displayed. • The control requires source voltage from a differential or source potential transformer or from the source voltage calculation (see FC 39) to obtain this parameter. Lack of this voltage will result in the parameter displaying dashes.									

TABLE 5-3, cont.
Function Codes

Func. Code	Level 1 Main Menu	Level 2 Sub-Menu	Level 3 Parameter	Security Level Read	Edit	Reset	Factory Setting	Key Entry Limit Low	High
34↓	Metering	Reverse Demand	034 Reverse kVA Load Present XXXX.X kVA	0	NA	NA	NA	NA	NA
• This is the present value of the load kVA during reverse power flow (since last reset), as a demand value, according to the demand time interval at FC 46. • The control requires source voltage from a differential or source potential transformer or from the source voltage calculation (see FC 39) to obtain this parameter. Lack of this voltage will result in the parameter displaying dashes.									
35	Metering	Reverse Demand	035 Reverse kW Load High XXXX.X kW (Date / Time shown)	0	NA	1	NA	NA	NA
• This is the highest value of the load kW during reverse power flow (since last reset), as a demand value, according to the demand time interval at FC 46. • Date and time of the occurrence of the highest kW load is displayed. • The control requires source voltage from a differential or source potential transformer or from the source voltage calculation (see FC 39) to obtain this parameter. Lack of this voltage will result in the parameter displaying dashes.									
35↓	Metering	Reverse Demand	035 Reverse kW Load Low XXXX.X kW (Date / Time shown)	0	NA	1	NA	NA	NA
• This is the lowest value of the load kW during reverse power flow (since last reset), as a demand value, according to the demand time interval at FC 46. • Date and time of the occurrence of the lowest kW load is displayed. • The control requires source voltage from a differential or source potential transformer or from the source voltage calculation (see FC 39) to obtain this parameter. Lack of this voltage will result in the parameter displaying dashes.									
35↓	Metering	Reverse Demand	035 Reverse kW Load Present XXXX.X kW	0	NA	NA	NA	NA	NA
• This is the present value of the load kW during reverse power flow (since last reset), as a demand value, according to the demand time interval at FC 46. • The control requires source voltage from a differential or source potential transformer or from the source voltage calculation (see FC 39) to obtain this parameter. Lack of this voltage will result in the parameter displaying dashes.									
36	Metering	Reverse Demand	036 Reverse kvar Load High XXXX.X kvar (Date / Time shown)	0	NA	1	NA	NA	NA
• This is the highest value of the load kvar during reverse power flow (since last reset), as a demand value, according to the demand time interval at FC 46. • Date and time of the occurrence of the highest kvar load is displayed. • The control requires source voltage from a differential or source potential transformer or from the source voltage calculation (see FC 39) to obtain this parameter. Lack of this voltage will result in the parameter displaying dashes.									

TABLE 5-3, cont.
Function Codes

Func. Code	Level 1 Main Menu	Level 2 Sub-Menu	Level 3 Parameter	Security Level Read	Security Level Edit	Security Level Reset	Factory Setting	Key Entry Limit Low	Key Entry Limit High
36↓	Metering	Reverse Demand	036 Reverse kvar Load Low XXXX.X kvar (Date / Time shown)	0	NA	1	NA	NA	NA
• This is the lowest value of the load kvar during reverse power flow (since last reset), as a demand value, according to the demand time interval at FC 46. • Date and time of the occurrence of the lowest kvar load is displayed. • The control requires source voltage from a differential or source potential transformer or from the source voltage calculation (see FC 39) to obtain this parameter. Lack of this voltage will result in the parameter displaying dashes.									
36↓	Metering	Reverse Demand	036 Reverse kvar Load Present XXXX.X kvar	NA	NA	NA	NA	NA	NA
• This is the present value of the load kvar during reverse power flow (since last reset), as a demand value, according to the demand time interval at FC 46. • The control requires source voltage from a differential or source potential transformer or from the source voltage calculation (see FC 39) to obtain this parameter. Lack of this voltage will result in the parameter displaying dashes.									
37	Metering	Reverse Demand	037 Reverse Source Voltage High XXX.X Volts (Date / Time shown)	0	NA	NA	NA	NA	NA
• This is the highest value of the primary input voltage of the regulator during reverse power flow, as a demand value, according to the demand time interval at FC 46. • Date and time of the occurrence of the highest source voltage is displayed.									
37↓	Metering	Reverse Demand	037 Reverse Source Voltage Low XXX.X Volts (Date / Time shown)	0	NA	NA	NA	NA	NA
• This is the lowest value of the primary input voltage of the regulator during reverse power flow, as a demand value, according to the demand time interval at FC 46. • Date and time of the occurrence of the lowest source voltage is displayed.									
37↓	Metering	Reverse Demand	037 Reverse Source Voltage Present XXX.X Volts	0	NA	NA	NA	NA	NA
• This is the present value of the primary input voltage of the regulator during reverse power flow, as a demand value, according to the demand time interval at FC 46.									

TABLE 5-3, cont.
Function Codes

Func. Code	Level 1 Main Menu	Level 2 Sub-Menu	Level 3 Parameter	Security Level Read	Edit	Reset	Factory Setting	Key Entry Limit Low	High
38	Metering	Master Reset	038 Demand Master Reset (PRESS RESET)	0	NA	1	NA	NA	NA

- Only demand metering, forward and reverse, and maximum and minimum buck, boost, and tap position values - and associated time/date - are reset to their corresponding present demand values at FC 38: press **Edit/Reset**, then press **Enter**.
- If the present demand value or tap position is in an invalid state, indicated by dashes, the high and low values will also become invalid and will display dashes.
- Individual maximum and minimum values and their date/time stamps (see FC 20–FC 37, FC 127, and FC 128) may be reset to the present demand value: access the appropriate function code on display, press **Edit/Reset**, then press **Enter**.
- Successful master reset is indicated by the word **(Done)** appearing on the display.
- See the **Control Programming: Special Functions** section of this manual.

39	Features	Source Side Voltage Calculation	039 Source Voltage Calculation On	0	2	NA	On	NA	NA

- The source side voltage is calculated based on tap position and the regulator type (see FC 140).
- Options include:
  - source voltage calculator off
  - source voltage calculator on
- The source voltage calculation provides accuracy to ±1.5% maximum error.
- When the calculated values are used, the LCD will display **(Calculated)**.
- If source voltage is sensed, it will take precedence over the calculated voltage.

40	Settings	Configuration	040 Regulator Identification 12345	0	2	NA	12345	1	32766

- This provision is made for entry of a number to uniquely identify each control.
- The serial number of the control (as shown on the decal on the back of the front panel) was entered at FC 40 at the factory. However, any other number within the limits defined above may be chosen instead.
- When using flashcards for file transfers, the regulator identification is included in the transferred files Refer to the **Advanced Features: Compact Flash Card** section of this manual.

41	Settings	Configuration	041 Regulator Configuration Wye	0	2	NA	See Note	NA	NA

- The control is designed to operate on wye-connected or delta-connected three-phase systems. Options include:
  - Wye (star)
  - Delta-lagging
  - Delta-leading
- Regulators connected line-to-ground (wye or star) develop potentials and currents suitable for direct implementation in the control.
- Regulators connected line-to-line (delta) develop a potential-to-current phase shift which is dependent upon whether the regulator is defined as leading or lagging. This phase shift must be known by the control to permit accurate calculations for correct operation.
- See the **Initial Control Programming** section of this manual to determine whether the regulator is leading or lagging.
- **Note:** See *Reference Bulletin R225-10-1* for a discussion of delta connections.
- The LCD will display dashes if this is not set correctly

TABLE 5-3, cont.
Function Codes

Func. Code	Level 1 Main Menu	Level 2 Sub-Menu	Level 3 Parameter	Security Level Read	Edit	Reset	Factory Setting	Key Entry Limit Low	High
42	Settings	Configuration	042 Control Operating Mode Sequential	0	2	NA	Sequential	NA	NA
• The manner in which the control responds to out-of-band conditions is selectable by the user. The appropriate mode is selected by entering one of the corresponding choices: • Sequential (Standard) • Time Integrating • Voltage Averaging • For detailed information, see the **Control Operation: Control Operating Modes** section of this manual.									
43	Settings	Configuration	043 System Line Voltage 7200 Volts	0	2	NA	See Note	1200	36000
• The control is designed to operate on primary system voltages from 1200 V to 36000 V. • Ratio correction is performed by the firmware, and, consequently, the primary voltage must be entered for this calculation. • Example: A regulator installed on a 7200 V system (line-to-neutral) would have 7200 entered at FC 43. • Example: A regulator installed open or closed delta on an 11000 V system (line-to-line) would have 11000 entered at FC 43. • **Note:** Ratio correction is performed by the firmware, and, consequently the system line voltage rating must be entered. The line voltage rating is available on the regulator nameplate and is summarized in Tables 10-1 and 10-2 for most regulator ratings.									
44	Settings	Configuration	044 Overall P.T. Ratio 20.0	0	2	NA	See Note	10.0	300.0
• The control is designed to operate on primary system voltages from 1200 V to 36000 V. • Ratio correction is performed by the firmware, and, consequently, the overall potential transformer (PT) ratio must be entered for this calculation. • **Note:** The overall PT ratio is available on the regulator nameplate and is summarized in Tables 10-1 and 10-2 for most regulator ratings. • Example: A 13800 V regulator, installed on a 7970 V system, would have 7970 entered at FC 43 and 63.7 entered at FC 44. The control will then define the 125.1 V (output from the back panel ratio correction transformer) as the 120-base voltage, and 120 V is displayed at FC 6.									
45	Settings	Configuration	045 C.T. Primary Rating 200 A	0	2	NA	See Note	25	2000
• The control is designed for 200 mA as the rated current transformer (CT) output current and will meter to 400 mA (200% load) with no loss of accuracy. • Ratio correction is performed by the firmware, and, consequently the CT primary rating must be entered. • **Note:** The CT primary rating is available on the regulator nameplate and is summarized in Tables 10-1 and 10-2 for most regulator ratings. • Example: A 7620 V, 328 A regulator (250 kVA) would have a CT primary rating of 400 A; therefore, 400 is entered at FC 45.									
46	Settings	Configuration	046 Demand Time Interval 15.0 Minutes	0	2	NA	15.0	3.0	60.0
• This is the time period during which the demand integral is performed for all demand readings (FC 20–FC 36). • Demand readings are useful because they represent the values which produce actual heating effects in electrical equipment and they do not respond to the continuous fluctuations which occur on the line.									

TABLE 5-3, cont.
Function Codes

Func. Code	Level 1 Main Menu	Level 2 Sub-Menu	Level 3 Parameter	Security Level Read	Edit	Reset	Factory Setting	Key Entry Limit Low	High
47	Features	Calibration	047 Voltage Calibration 110.0 Volts	0	3	NA	See Note	110.0	130.0
• The voltage which the control actually measures is displayed at FC 47. In the example given in FC 44 description, FC 47 would indicate 125.1 V when FC 6 indicated 120 V. • To calibrate, this value is compared to a reference voltmeter and, if different, is changed to display the correct value. • **Note:** A default calibration factor is programmed into non-volatile memory at the factory and should not be necessary in the field. • See the **Troubleshooting: Control Calibration** section of this manual.									
48	Features	Calibration	048 Current Calibration 100.0 mA	0	3	NA	See Note	100.0	400.0
• The current which the control actually measures, in mA, is displayed at FC 48. • The control is designed for 200 mA as the rated CT secondary output current and will meter to 400 mA (200% load) with no loss of accuracy. • To calibrate, this value is compared to a reference ammeter and, if different, is changed to display the correct value. • **Note:** A default calibration factor is programmed into non-volatile memory at the factory and should not be necessary in field. • See the **Troubleshooting: Control Calibration** section of this manual.									
49	Settings	Configuration	049 Tap Changer Type Cooper QD8	0	2	NA	See Note	NA	NA
• This function code identifies the tap-changer type. See *Service Information S225-10-10.* Changing this function code changes the control's sampling rate to accommodate varying tap-changer types. • Options include: • Cooper QD8 • Cooper QD5 • Cooper QD3 • Cooper Spring Drive • Cooper Direct Drive • Siemens • General Electric • none • **Note:** The LCD will display **(Invalid)** if this is not set correctly.									
50	Settings	Calendar/Clock	050 System Calendar and Clock (Date / Time shown)	0	3	NA	NA	NA	NA
• The system date and time utilizes the MM/DD/YYYY and 24-hour format. • The default is Jan. 1, 1970. • Refer to the **Control Features: Calendar/Clock** section of this manual for more information.									
51	Settings	Reverse Direction	051 Reverse Set Voltage 120.0 Volts	0	2	NA	120.0	100.0	135.0
• The set voltage is the voltage level to which the control will regulate, on the 120 V base, during reverse power flow. • See FC 1 and the **Control Features: Reverse Power Operation** section of this manual.									
52	Settings	Reverse Direction	052 Reverse Bandwidth 2.0 Volts	0	2	NA	2.0	1.0	6.0
• The bandwidth is defined as that total voltage range, around the set voltage, which the control will consider as a satisfied (in-band) condition, during reverse power flow. • Example: A bandwidth of 3.0 V and a set voltage of 120.0 V will establish a low limit of 118.5 V and a high limit of 121.5 V. • See FC 2–FC 5 and the **Control Features: Reverse Power Operation** section of this manual.									

TABLE 5-3, cont.
Function Codes

Func. Code	Level 1 Main Menu	Level 2 Sub-Menu	Level 3 Parameter	Security Level Read	Edit	Reset	Factory Setting	Key Entry Limit Low	High
53	Settings	Reverse Direction	053 Reverse Time Delay 45 Seconds	0	2	NA	45	5	180
• The time delay is the period of time (in seconds) that the control waits, from the time when the voltage first goes out-of-band to the time when a tap change is initiated, during reverse power flow. • See FC 2–FC 5 and the **Control Features: Reverse Power Operation** section of this manual.									
54	Settings	Reverse Direction	054 Rev Line Drop Comp. Resistance 0.0 Volts	0	2	NA	0.0	-96.0	96.0
• The resistive line-drop compensation value is used to model the resistive line voltage drop between the regulator and the center of regulation. • The control uses this parameter, in conjunction with the regular configuration (FC 41) and the load current, to calculate and regulate to the compensated voltage (displayed at FC 8) during the reverse power flow. • See FC 2–FC 5 and the **Control Features: Reverse Power Operation** section of this manual.									
55	Settings	Reverse Direction	055 Rev Line Drop Comp. Reactance 0.0 Volts	0	2	NA	0.0	-96.0	96.0
• The reactive line-drop compensation value is used to model the reactive line drop voltage between the regulator and the center of regulation. • The control uses this parameter, in conjunction with the regulator configuration (FC 41) and the load current, to calculate and regulate to the compensated voltage (displayed at FC 8) during the reverse power flow. • See FC 2– FC 5 and the **Control Features: Reverse Power Operation** section of this manual.									
56	Features	Reverse Power Mode	056 Reverse Sensing Mode Locked Forward	0	2	NA	Locked Forward	NA	NA
• The control offers seven different response characteristics for reverse power flow operation, selectable by the user. • Options include: • Locked Forward • Locked Reverse • Reverse Idle • Bidirectional • Neutral Idle • Cogeneration • Reactive Bidirectional • The current threshold set at FC 57 must be exceeded for the reverse sensing mode to function. • See the **Control Features: Reverse Power Operation** section of this manual.									
57	Features	Reverse Power Mode	057 Reverse Current Sense Threshold 1%	0	2	NA	1	1	5
• This is the current threshold at which the control switches operate, either from forward to reverse, or reverse to forward. • This threshold is programmable as a percentage of the rated CT primary rating. • Example: A 328 A regulator utilizing a CT with a 400 A primary rating and with a 3% threshold value would have a threshold of 12 A. • The metering of the control switches on a fixed 1% threshold, completely independent from FC 57. • See the **Control Features: Reverse Power Operation** section of this manual.									

TABLE 5-3, cont.
Function Codes

Func. Code	Level 1 Main Menu	Level 2 Sub-Menu	Level 3 Parameter	Security Level Read	Edit	Reset	Factory Setting	Key Entry Limit Low	High
60	Features	Communications	060 Com Port #1 Protocol DNP	0	2	NA	2179	NA	NA
• This function defines which resident protocol of the control will be used on Communications Port #1/#3. • Options include: • DNP • 2179 • See the **Control Features: Digital SCADA** section of this manual.									
61	Features	Communications	061 Com Port #1 Speed 9600	0	2	NA	9600	NA	NA
• The control microprocessor has two communications channels, each with selectable baud rates. • Options for Communications Port #1/#3 include: • 300 • 600 • 1200 • 2400 • 4800 • 9600 • 19200 • 38400									
62	Features	Communications	062 Com Port #1 Sync Time 0 mSec	0	2	NA	0	0	65535
• This defines the period of time, for Com Port #1/#3, the received data line must idle to assume the start of a request message. • See the **Control Features: Digital SCADA** section of this manual.									
63	Features	Communications	063 Com Port #1 DNP Master Adrs 1234	0	2	NA	1234	0	65535
• The control will send unsolicited responses to this master address.									
64	Features	Communications	064 Com Port #1 DNP Remote Adrs1 1	0	2	NA	1	0	65535
• This is the primary DNP remote address used by user. • The DNP Remote Address 1 for Com Port #1 is entered at FC 64.									
64↓	Features	Communications	064 Com Port #1 DNP Remote Adrs2 65519	0	2	NA	65519	0	65535
• This is the DNP remote address available for remote configuration. For more information, contact your Cooper Power Systems representative. • The DNP Remote Address 2 for Com Port #1 is entered at FC 64.									

TABLE 5-3, cont.
Function Codes

Func. Code	Level 1 Main Menu	Level 2 Sub-Menu	Level 3 Parameter	Security Level Read	Edit	Reset	Factory Setting	Key Entry Limit Low	High
64↓	Features	Communications	064 Com Port #1 2179 Remote Adrs 1	0	2	NA	1	0	2047

- This is the control SCADA 2179 Remote Address for Com Port #1.
- Each control on the system can be uniquely addressed by the SCADA RTU or other communications device. For 2179, the options include:
  - 0-2046 = Unique device address range. Controls with addresses in this range uniquely respond when the particular address is sent.
  - 2047 = Broadcast address. All controls on the system listen and change as commanded, with no response, if a message is sent to address 2047.
- The control SCADA address for Com Port #1 is entered at FC 64.
- For 2179, the High Entry Limit is 2047.

65	Features	Communications	065 Com Port #1 Handshake Mode RTR without CTS	0	2	NA	RTR without CTS	NA	NA

- FC 65 allows the user to select the appropriate method for control-to-SCADA message interaction (handshake mode) on Com Port #1.
- The transmit/receive handshaking mode allows adaptability to different types of communication system interfaces with the control. Options include:
  - RTS without CTS - Request to Send (RTS) without Clear to Send (CTS) support
  - RTS with CTS - Request to Send (RTS) with Clear to Send (CTS) support
  - RTR without CTS- Ready to Receive (RTR) without Clear to Send (CTS) support
  - RTR with CTS - Ready to Receive (RTR) with Clear to Send (CTS) support
- See FC 66 and FC 67 for programming of the Transmit Enable Delay and Transmit Disable Delay settings.

66	Features	Communications	066 Com Port #1 Tx Enable Delay 0 mSec	0	2	NA	0	0	1000

- When the control is set for transmit control handshaking, the user may require a delay (in milliseconds) on Com Port #1 between the time when the transmit enable is enabled to when data is transmitted.
- Example: If the transmit enable were used as a keying device for a transmitter or modem, a "warm-up" period may be necessary before data can be transmitted.
- For more information, refer to the **Advanced Control Features: Communications** section of this manual.

67	Features	Communications	067 Com Port #1 Tx Disable Delay 0 mSec	0	2	NA	0	0	1000

- When the control is set for transmit control handshaking, the user may require a delay (in milliseconds) on Com Port #1 between the time when the data transmission is terminated and the transmit enable signal is disabled.
- See Figure 5-4.

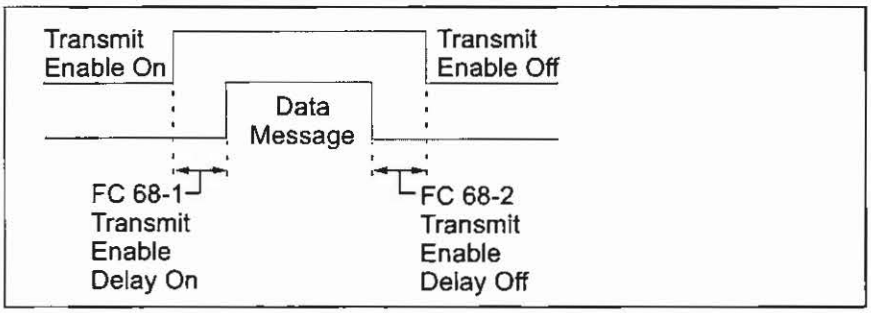

Figure 5-4.
Data transmission from the CL-6A control to the communication system for handshaking applications.

TABLE 5-3, cont.
Function Codes

Func. Code	Level 1 Main Menu	Level 2 Sub-Menu	Level 3 Parameter	Security Level Read	Edit	Reset	Factory Setting	Key Entry Limit Low	High
69	Features	Auto Block Status	069 Auto Operation Blocking Status Normal	0	2	NA	Normal	NA	NA
• The control with communications options allows the user to completely control the regulator through the SCADA system. The SCADA system may place the regulator in a blocked state, thus inhibiting any further tap-changer operation initiated by the control. Options include: • Normal • Blocked • Normal refers to normal automatic operation. Blocked refers to a state when automatic operation is inhibited. • Example: This function can be used to perform a desired amount of voltage reduction and then disabling of the tap-changer (inhibit additional operations) for an indefinite time period. • The operator may change the state of this code by entering the level 2 security at the control and pressing the **Edit/Reset** key. If SCADA has the control blocked, the operator may override the SCADA system by changing FC 69 from blocked to normal, or, if the operator chooses to block automatic operation, FC 69 can be changed from normal to blocked. • Refer to the **Control Features: SCADA** section of this manual for additional information concerning the SCADA interaction with the control.										
70	Features	Voltage Reduction	070 Voltage Reduction Mode Off	0	2	NA	Off	NA	NA
• The control has three voltage reduction modes available for user selection. Options include: • Off • Local/Digital Remote • Remote - Latch • Remote - Pulse • Refer to the **Control Features: Voltage Reduction** section of this manual.									
71	Voltage Limiter	Voltage Reduction	071 Reduction in Effect 10.0 %	0	NA	NA	NA	NA	NA
• This is the actual percentage of voltage reduction presently active. • See the **Control Features: Voltage Reduction** section of this manual.									
72	Features	Voltage Reduction	072 Local/Digital Reduction Value 0.0 %	0	2	NA	0.0	0.0	10.0
• The percentage of local voltage reduction to be performed is entered here. • Example: If the regulator is set for 125 V and 3.6% voltage reduction is required, 3.6% is entered here (first set FC 70 to local/digital remote) and the regulator will tap down 4.5 V (3.6% of 125 V) immediately following the time-delay period. • When activating voltage reduction via digital SCADA, this is the parameter which is changed to the percent desired. • See the **Control Features: Voltage Reduction** section of this manual.									
73	Features	Voltage Reduction	073 Remote #1 Value 0.0 %	0	2	NA	0.0	0.0	10.0
• Three levels of remotely activated latching voltage reduction are available. • The percentage of voltage reduction to be performed at Remote Level #1 is programmed at FC 73. Remote activation is then accomplished by applying a signal to the appropriate input terminal when FC 70 is set to remote latch. • See the **Control Features: Analog SCADA** section of this manual.									

TABLE 5-3, cont.
Function Codes

Func. Code	Level 1 Main Menu	Level 2 Sub-Menu	Level 3 Parameter	Security Level Read	Edit	Reset	Factory Setting	Key Entry Limit Low	High
74	Features	Voltage Reduction	074 Remote #2 Value 0.0 %	0	2	NA	0.0	0.0	10.0
• Three levels of remotely activated latching voltage reduction are available. • The percentage of voltage reduction to be performed at Remote Level #2 is programmed at FC 74. Remote activation is then accomplished by applying a signal to the appropriate input terminal when FC 70 is set to remote latch. • See the **Control Features: Analog SCADA** section of this manual.									
75	Features	Voltage Reduction	075 Remote #3 Value 0.0 %	0	2	NA	0.0	0.0	10.0
• Three levels of remotely activated latching voltage reduction are available. • The percentage of voltage reduction to be performed at Remote Level #3 is programmed at FC 75. Remote activation is then accomplished by applying a signal to two appropriate input terminals when FC 70 is set to remote latch. • See the **Control Features: Analog SCADA** section of this manual.									
76	Features	Voltage Reduction	076 # of Pulse Reduction Steps 0	0	2	NA	0	0	10
• Up to ten steps of voltage reduction are available when pulsed voltage reduction mode is selected. (FC 70 set to remote/pulse.) • Function 76 defines the number of steps selected for pulsed reduction operation. The percentage of voltage reduction of each step is defined at FC 77. • See the **Control Features: Analog SCADA** section of this manual.									
77	Features	Voltage Reduction	077 % of Voltage Red Per Pulse Step 0.0 %	0	2	NA	0.0	0.0	10.0
• FC 77 defines the percentage of voltage reduction which will be applied for each step of pulsed voltage reduction selected at FC 76. • See the **Control Features: Analog SCADA** section of this manual.									
79	Features	SOFT-ADD-AMP	079 SOFT-ADD-AMP Limits Off	0	2	NA	Off	NA	NA
• The control has SOFT-ADD-AMP capabilities. Options include: • Off • On • Default is Off; On with Remote Override • See the **Control Features: SOFT-ADD-AMP** section of this manual.									
80	Features	Voltage Limiter	080 Voltage Limiter Mode Off	0	2	NA	Off	NA	NA
• The control has voltage-limiting capabilities for both high-voltage and low-voltage conditions. Options include: • Off • High limit active only • High and low limits active • See the **Control Features: Voltage Limiting** section of this manual.									

TABLE 5-3, cont.
Function Codes

Func. Code	Level 1 Main Menu	Level 2 Sub-Menu	Level 3 Parameter	Security Level Read	Edit	Reset	Factory Setting	Key Entry Limit Low	High
81	Features	Voltage Limiter	081 High Voltage Limit 130.0 Volts	0	2	NA	130.0	120.0	135.0
• The high voltage limit is programmed here. • When the voltage-limiting function is activated (FC 80, high and low limit active), the control will prevent the output voltage of the regulator from exceeding this value. • See the **Control Features: Voltage Limiting** section of this manual.									
82	Features	Voltage Limiter	082 Low Voltage Limit 105.0 Volts	0	2	NA	105.0	105.0	120.0
• The low voltage limit is programmed here. • When the voltage-limiting function is activated (FC 80, high and low limit active), the control will prevent the output voltage of the regulator from dropping below this value. • See the **Control Features: Voltage Limiting** section of this manual.									
89	Diagnostics	Control	089 Firmware Version XX.YY.ZZ	0	NA	NA	NA	NA	NA
• XX=Version number. Used for major changes that involve database enhancements. • YY=Revision number. Used for changes that do not involve database enhancements. • ZZ=Used for new firmware release.									
91	Diagnostics	Control	091 Self Test	NA	NA	NA	NA	NA	NA
• Access this screen to initiate the self test. • With FC 91 accessed, the LCD will display **(Enter)**: press the **Enter** key to select and press **Enter** again to confirm; the system will reboot, then display the startup screen. (Press **Escape** for further keypad use.) • Refer to **Power-Up/Reset Conditions** in this section of this manual.									
92	Features	Security Access	092 Security Override 0	0	3	NA	0	0	3
• FC 92 is the control security override parameter. • Entering the level 3 security code at FC 99 will permit the security parameters to be modified. • See the **Control Operation: Security System** section of this manual.									
96	Features	Security Access	096 Security Code Level 1 1234	3	3	NA	1234	1	9999
• The number to be used as the level 1 security code is entered here. • Entry of this number at FC 99 permits the user to change/reset only the parameters marked as level 1 security (demand and tap position readings). • See the **Control Operation: Security System** section of this manual.									

TABLE 5-3, cont.
Function Codes

Func. Code	Level 1 Main Menu	Level 2 Sub-Menu	Level 3 Parameter	Security Level Read	Edit	Reset	Factory Setting	Key Entry Limit Low	High
97	Features	Security Access	097 Security Code Level 2 12121	3	3	NA	12121	10000	19999
• The number to be used as the level 2 security code is entered here. • Entry of this number at FC 99 permits the user to change/reset only the parameters marked as level 2 security (control settings, configuration, and clock) and level 1 security (demand and tap positions readings). • See the **Control Operation: Security System** section of this manual.									
98	Features	Security Access	098 Security Code Level 3 32123	3	3	NA	32123	20000	32766
• The number to be used as the level 3 security code is entered here. • Entry of this number at FC 99 permits the user to change/reset any parameter. • **Note:** If the level 3 code is changed by the user, the new value should be recorded and kept in a safe place. If lost, the security codes can be retrieved with a flash card and CCI software, with the CCI software via a PC directly connected to the control, or with the remote communications system. • See the **Control Operation: Security System** section of this manual.									
99	Features	Security Access	Security Code _____	3	3	NA	32123	20000	32766
• This is the function code used to access the menu location where security codes are entered for access to the system. • Scrolling to this level is not allowed. • See the **Control Operation: Security System** section of this manual.									
100	Counters	Operations Counter	100 Last Counter Change XXXXX (Date / Time shown)	0	NA	NA	NA	NA	NA
• FC 100 displays the time and date since the last total-operations counter change, as well as the quantity of operations since the last change. • The function code may be set to a specific value.									
101	Counters	Operations Counter	101 Last 24 Hours Operations XXXXX (Date / Time shown)	0	NA	3	See Note	NA	NA
• Operations in last 24 hours (updated hourly and on every tap change). • **Note:** This is reset to zero by pressing **Edit/Reset**, then **Enter**.									
102	Counters	Operations Counter	102 Last 30 Days Operations XXXXX (Date / Time shown)	0	NA	3	See Note	NA	NA
• Operations in last 30 days (updated daily and on every tap change). • **Note:** This is reset to zero by pressing **Edit/Reset**, then **Enter**.									

TABLE 5-3, cont.
Function Codes

Func. Code	Level 1 Main Menu	Level 2 Sub-Menu	Level 3 Parameter	Security Level Read	Edit	Reset	Factory Setting	Key Entry Limit Low	High
103	Counters	Operations Counter	103 Current Month Operations XXXXX (Date / Time shown)	0	NA	3	See Note	NA	NA
• Operations since the beginning of current month (updated on every tap change and reset when the clock's month changes). • **Note:** This is reset to zero by pressing **Edit/Reset**, then **Enter**.									
104	Counters	Operations Counter	104 Last Month Operations XXXXX (Date / Time shown)	0	NA	3	See Note	NA	NA
• Operations in last calendar month (if reset, this field will remain zero until the month changes). • **Note:** This is reset to zero by pressing **Edit/Reset**, then **Enter**.									
105	Counters	Operations Counter	105 Current Year Operations XXXXX (Date / Time shown)	0	NA	3	See Note	NA	NA
• Operations since January 1st of current year (updated on every tap change and reset when the clock's year changes). • **Note:** This is reset to zero by pressing **Edit/Reset**, then **Enter**.									
106	Counters	Operations Counter	106 Last Year Operations XXXXX (Date / Time shown)	0	NA	3	See Note	NA	NA
• Operations in last calendar year (if reset, this field will remain zero until the year changes). • **Note:** This is reset to zero by pressing **Edit/Reset**, then **Enter**.									
107	Counters Counter	Operations	107 Enable Interval Counters Enabled	0	3	NA	Enabled	NA	NA
• FC 107 is used for enabling functions codes 101 to 106. Options include: • Enabled • Disabled									
112	Metering	Instantaneous	112 Percent Regulation XX.X %	0	NA	NA	NA	NA	NA
• When the regulator output voltage is greater than the input voltage (regulator boosting), the sign is implied (+). When the output voltage is lower than the input voltage, the sign is implied (-). • This is the actual percentage that the regulator is actively boosting (raising) or bucking (lowering) the input (source) voltage. • Tap position indication is calculated as follows: % regulation = [(output+input) - 1] x 100. • During reverse power operation, the control requires source voltage from a differential or source potential transformer or from the source voltage calculation (see FC 39) to obtain this parameter. Lack of this voltage will result in the parameter displaying dashes.									
125	Metering	Instantaneous	125 Energy kW-hour Forward XXXX.X kW-h	0	NA	1	See Note	NA	NA
• This is the total forward energy, measured in kilowatt hours. • **Note:** This is reset to zero by pressing **Edit/Reset**, then **Enter**, and when the Date/Time is changed.									

TABLE 5-3, cont.
Function Codes

Func. Code	Level 1 Main Menu	Level 2 Sub-Menu	Level 3 Parameter	Security Level Read	Edit	Reset	Factory Setting	Key Entry Limit Low	High
125↓	Metering	Instantaneous	125 Energy kW-hour Reverse XXXX.X kW-h	0	NA	1	See Note	NA	NA
• This is the total reverse energy, measured in kilowatt hours. • **Note:** This is reset to zero by pressing **Edit/Reset**, then **Enter**, and when the Date/Time is changed.									
126	Metering	Instantaneous	126 Energy kvar-hour Forward XXXX.X kvar-h	0	NA	1	NA	NA	NA
• This is the total forward energy, measured in kvar.									
126↓	Metering	Instantaneous	126 Energy kvar-hour Reverse XXXX.X kvar-h	0	NA	1	NA	NA	NA
• This is the total reverse energy, measured in kvar.									
127	Metering	Forward Demand	127 Maximum % Boost XX.X % (Date / Time shown)	0	NA	1	NA	NA	NA
• This is the highest percentage that the regulator has raised the input voltage (since last reset). • This parameter is the upper drag-hand value for the present percent regulation, FC 12. • The control requires an input voltage from a differential or source potential transformer to obtain this parameter. Lack of this voltage will result in the parameter displaying dashes.									
128	Metering	Forward Demand	128 Maximum % Buck XX.X % (Date / Time shown)	0	NA	1	NA	NA	NA
• This is the highest percentage that the regulator has lowered the input voltage (since last reset). • This parameter is the lower drag-hand value for the present percent regulation, FC 12. • The control requires an input voltage from a differential or source potential transformer to obtain this parameter. Lack of this voltage will result in the parameter displaying dashes.									
140	Settings	Configuration	140 Regulator Type Type B	0	2	NA	See Note	NA	NA
• Regulator type defines the regulator type based on ANSI standards. Options include: • Type A (series design) • Type B (inverted design) • **Note:** The regulator type is included on CPS nameplates.									
141	Settings	Menu System	141 Language Selection English	0	2	NA	English	NA	NA
• This setting allows the user to select the language to display. Options include: • English • Spanish • French • Portuguese									

TABLE 5-3, cont.
Function Codes

Func. Code	Level 1 Main Menu	Level 2 Sub-Menu	Level 3 Parameter	Security Level Read	Edit	Reset	Factory Setting	Key Entry Limit Low	High
142	Counters	Menu System	142 Date Format MM/DD/YYYY	0	2	NA	MM/DD/YYYY	NA	NA
• This setting allows the user to select how the date format will be displayed. Options include: • MM/DD/YYYY • DD/MM/YYYY • YYYY/MM/DD									
143	Counters	Menu System	143 Time Format 12 Hour AM/PM	0	2	NA	12 Hour AM/PM	NA	NA
• This setting allows the user to select whether time will be displayed on the 12-hour or the 24-hour scale. Options include: • 12 Hour AM/PM • 24 Hour									
144	Settings	Configuration	144 P.I. ADD-AMP High Limit 16	0	2	NA	16	NA	NA
• The physical location of the high P.I. limit of the position indicator, as set by the user, is entered by the user-operator here.. • The allowable values are 16, 14, 12, 10, or 8.									
145	Settings	Configuration	145 P.I. ADD-AMP Low Limit -16	0	2	NA	-16	NA	NA
• The physical location of the low P.I. limit of the position indicator, as set by the user, is entered by the user-operator here.. • The allowable values are -16, -14, -12, -10, or -8.									
146	Settings	Configuration	146 Vin P.T. Configuration Vdiff Mode	0	2	NA	Vdiff Mode	NA	NA
• This defines the configuration of the PT for the source-side voltage. Options include: • V_{diff} Mode • V_{in} Mode. • The V_{diff} Mode is used when the regulator is provided with an internal differential PT or if the Source Voltage Calculator (FC39) is turned on. The V_{in} Mode is selected when an external source PT is supplied by the user to provide the source voltage for the CL-6 control. • See the **Control Features: Source-Side Voltage** section of this manual.									
150	Features	Calibration	150 Reset Calibration	0	3	NA	NA	NA	NA
• This is a command. When **Enter** key is pressed, a **(CONFIRM)** message is displayed on the fourth line of LCD. When **Enter** key is pressed again, voltage and current calibration factors are reset.									
160	Features	Communications Protocol	160 Com Port #2 DNP	0	2	NA	DNP	NA	NA
• This function defines which resident protocol of the control will be used on Communications Port #2; options include: • DNP • 2179 • See the **Control Features: Digital SCADA** section of this manual.									

TABLE 5-3, cont.
Function Codes

Func. Code	Level 1 Main Menu	Level 2 Sub-Menu	Level 3 Parameter	Security Level Read	Edit	Reset	Factory Setting	Key Entry Limit Low	High
161	Features	Communications	161 Com Port #2 Speed 9600 BPS	0	2	NA	9600	NA	NA
• The control microprocessor has two communications channels, each with selectable baud rates. • Options for Communications Port #2 include: • 300 • 600 • 1200 • 2400 • 4800 • 9600 • 19200 • 38400									
162	Features	Communications	162 Com Port #2 Sync Time 0 msec	0	2	NA	0	0	65535
• This defines the period of time, for Com Port #2, the received data line must idle to assume the start of a request message. • See the **Control Features: Digital SCADA** section of this manual.									
163	Features	Communications	163 Com Port #2 DNP Master Adrs 1234	0	2	NA	1234	0	65535
• The control will send unsolicited responses to this master address.									
164	Features	Communications	164 Com Port #2 DNP Remote Adrs1 2	0	2	NA	2	0	65535
• This is the primary DNP remote address for Com Port #2. • The DNP Remote Address 1 for Com Port #2 is entered at FC 64 with a factory preset address of 2.									
164↓	Features	Communications	164 Com Port #2 DNP Remote Adrs2 65519	0	2	NA	65519	0	65535
• This is the DNP remote address available for remote configuration. For more information, contact your Cooper Power Systems representative. • The DNP Remote Address 2 for Com Port #2 is entered at FC 64 with a factory preset address of 65519.									
164↓	Features	Communications	164 Com Port #2 2179 Remote Adrs 6	0	2	NA	6	0	2047
• This is the control SCADA 2179 Remote Address for Com Port #2. • Each control on the system can be uniquely addressed by the SCADA RTU or other communications device. For 2179, the options include: • 0-2046 = Unique device address range. Controls with addresses in this range uniquely respond when the particular address is sent. • 2047 = Broadcast address. All controls on the system listen and change as commanded, with no response, if a message is sent to address 2047. • The control SCADA address for Com Port #1 is entered at FC 64 with a factory preset address of 6. • For 2179, the High Entry Limit is 2047.									

TABLE 5-3, cont.
Function Codes

Func. Code	Level 1 Main Menu	Level 2 Sub-Menu	Level 3 Parameter	Security Level Read	Edit	Reset	Factory Setting	Key Entry Limit Low	High
165	Features	Communications	165 Com Port #2 Handshake Mode RTR without CTS	0	2	NA	RTR without CTS	NA	NA

• FC 165 allows the user to select the appropriate method for control-to-SCADA message interaction (handshake mode) on Com Port #2.
• The transmit/receive handshaking mode allows adaptability to different types of communication system interfaces with the control. Options include:
  • RTS without CTS - Request to Send (RTS) without Clear to Send (CTS) support
  • RTS with CTS - Request to Send (RTS) with Clear to Send (CTS) support
  • RTR without CTS- Ready to Receive (RTR) without Clear to Send (CTS) support
  • RTR with CTS - Ready to Receive (RTR) with Clear to Send (CTS) support
• See FC 166 and FC 167 for programming of the Transmit Enable Delay and Transmit Disable Delay settings.									

166	Features	Communications	166 Com Port #2 Tx Enable Delay 0 mSec	0	2	NA	0	0	1000
• When the control is set for transmit control handshaking, the user may require a delay (in milliseconds) on Com Port #2 between the time when the transmit enable is enabled to when data is transmitted. • Example: If the transmit enable were used as a keying device for a transmitter or modem, a "warm-up" period may be necessary before data can be transmitted. • For more information, refer to the **Advanced Control Features: Communications** section of this manual.									
167	Features	Communications	167 Com Port #2 Tx Disable Delay 0 mSec	0	2	NA	0	0	1000
• When the control is set for transmit control handshaking, the user may require a delay (in milliseconds) on Com Port #2 between the time when the data transmission is terminated and the transmit enable signal is disabled.									
170	Features	Tap to Neutral	170 Tap to Neutral Off	0	2	NA	Off	NA	NA
• The Tap-to-Neutral feature is enabled here. The options include: • Off • On. • For more information, refer to the **Control Features: Tap-to-Neutral** section of this manual.									
175	Features	SOFT-ADD-AMP	175 SOFT-ADD-AMP High Limit 16	0	2	NA	16	NA	NA
• SOFT-ADD-AMP restricts the range of regulation through software means as opposed to the hardware on the tap position indicator. The high limit is set here. • The allowable values are 16, 14, 12, 10, or 8.									
176	Features	SOFT-ADD-AMP	176 SOFT-ADD-AMP Low Limit -16	0	2	NA	-16	NA	NA
• The low limit of the SOFT-ADD-AMP restriction on the range of regulation are set here. • The allowable values are -16, -14, -12, -10, or -8.									

TABLE 5-3, cont.
Function Codes

Func. Code	Level 1 Main Menu	Level 2 Sub-Menu	Level 3 Parameter	Security Level Read	Edit	Reset	Factory Setting	Key Entry Limit Low	High
189	Diagnostics	Control	189 Database Version XX	0	NA	NA	NA	NA	NA
• This is the Database Version Number of the firmware. • XX = Version Number									
190	Diagnostics	Control	190 PLD Version XX	0	NA	NA	NA	NA	NA
• This is the Programmable Logic Device (PLD) Version Number • XX = Programmable Logic Device (PLD) Version Number									
260	Diagnostics	Communications	260 Com Port #1 Tx Messages XXXXX	0	NA	1	NA	NA	NA
• This is a count of Transmitted Messages from Com Port #1/#3.									
261	Diagnostics	Communications	261 Com Port #1 Rx Messages XXXXX	0	NA	1	NA	NA	NA
• This is a count of Received Messages from Com Port #1/#3.									
262	Diagnostics	Communications	262 Com Port #1 Rx Errors XXXXX	0	NA	1	NA	NA	NA
• This is a count of Receive Errors from Com Port #1/#3.									
263	Diagnostics	Communications	263 Com Port #2 Tx Messages XXXXX	0	NA	1	NA	NA	NA
• This is a count of Transmitted Messages from Com Port #2									
264	Diagnostics	Communications	264 Com Port #2 Rx Messages XXXXX	0	NA	1	NA	NA	NA
• This is a count of Received Messages from Com Port #2									
265	Diagnostics	Communications	265 Com Port #2 Rx Errors XXXXX	0	NA	1	NA	NA	NA
• This is a count of Received Errors from Com Port #2									

TABLE 5-3, cont.
Function Codes

Func. Code	Level 1 Main Menu	Level 2 Sub-Menu	Level 3 Parameter	Security Level Read	Edit	Reset	Factory Setting	Key Entry Limit Low	High
266	Features	Communications	266 Com Port #1 2179 Ordinal Map CL-6A	0	2	NA	CL-6A	NA	NA
• This allows the user to set the control to emulate different maps for different CL-series CPS regulator controls for Com Ports #1/#3. • The options include: • USER • CL-5D • CL-5E • CL-6A									
267	Features	Communications	267 Com Port #1 DNP Data Dict CL-6A	0	2	NA	CL-6A	NA	NA
• This allows the user to set the control to emulate different maps for different CL-series CPS regulator controls for Com Ports #1/#3. • The options include: • USER • CL-5D • CL-5E • CL-6A									
268	Features	Communications	268 Com Port #2 2179 Ordinal Map CL-6A	0	2	NA	CL-6A	NA	NA
• This allows the user to set the control to emulate different maps for different CL-series CPS regulator controls. • The options include: • USER • CL-5D • CL-5E • CL-6A									
269	Features	Communications	269 Com Port #2 DNP Data Dict CL-6A	0	2	NA	CL-6A	NA	NA
• This allows the user to set the control to emulate different data dictionaries for different CL-series CPS regulator controls. • The options include: • USER • CL-5D • CL-5E • CL-6A									
300	Diagnostics	Maintenance	300 PMT Mode A State Off	0	2	NA	Off	NA	NA
• The Preventive Maintenance Tapping (PMT) feature Mode A will automatically raise and lower the tap-changer to wipe contact blades. The PMT feature Mode A is turned off or on here. The options include: • Off • On									
301	Diagnostics	Maintenance	301 PMT Mode A Countdown Delay 20 Days	0	NA	NA	NA	NA	NA
• This is the time remaining until the next PMT Mode A operation.									
302	Diagnostics	Maintenance	302 PMT Mode A Time Delay 7 Days	0	2	NA	7	1	99
• This is the user-defined period of time between PMT Mode A operations.									

TABLE 5-3, cont.
Function Codes

Func. Code	Level 1 Main Menu	Level 2 Sub-Menu	Level 3 Parameter	Security Level Read	Edit	Reset	Factory Setting	Key Entry Limit Low	High
303	Diagnostics	Maintenance	303 PMT Mode A Issue Test	NA	2	NA	NA	NA	NA
• The user can force the PMT Mode A operation independent of the time-delay setting. • This is a command. When the **Enter** key is pressed, the **(CONFIRM)** message is displayed on the fourth line of the LCD. When the **Enter** key is pressed again, the test sequence begins.									
320	Diagnostics	Maintenance	320 PMT Mode B State Off	NA	2	NA	Off	NA	NA
• The Preventive Maintenance Tapping (PMT) feature Mode B will automatically raise and lower the tap-changer to wipe reversing contact blades. The PMT feature Mode B is turned off or on here. The options include: • Off • On									
321	Diagnostics	Maintenance	321 PMT Mode B Countdown Delay XX Days	0	NA	NA	NA	NA	NA
• This is the time remaining until the next PMT Mode B operation.									
322	Diagnostics	Maintenance	322 PMT Mode B Time Delay 7 Days	0	2	NA	7	1	99
• This is the user-defined period of time between PMT Mode B operations.									
323	Diagnostics	Maintenance	323 PMT Mode B Start Time 22:00	0	2	NA	22:00	00:00	23:59
• When the PMT feature Mode B is turned on (FC 320), operation is enabled only within a specified time period. The starting time set here.									
324	Diagnostics	Maintenance	324 PMT Mode B Stop Time 02:00	0	2	NA	02:00	00:00	23:59
• The PMT Mode B operation is disabled after the stopping time set here.									
325	Diagnostics	Maintenance	325 PMT Mode B Max Deviation 8	0	2	NA	8	1	16
• This is the maximum number of tap positions beyond neutral for which PMT Mode B is enabled.									
326	Diagnostics	Maintenance	326 PMT Mode B Designation Off	0	2	NA	Off	NA	NA
• This allows the performance of PMT Mode B maintenance operations to be coordinated among multiple regulators. Options include: • Off • Master • Slave									

TABLE 5-3, cont.
Function Codes

Func. Code	Level 1 Main Menu	Level 2 Sub-Menu	Level 3 Parameter	Security Level			Factory Setting	Key Entry Limit	
				Read	Edit	Reset		Low	High
327	Diagnostics	Maintenance	327 PMT Mode B Current Limit 50 %	0	2	NA	50	0	160
• The PMT Mode B is enabled at or below the current limit setting, defined as a percentage of the CT primary.									
328	Diagnostics	Maintenance	328 PMT Mode B Issue Test	NA	2	NA	NA	NA	NA
• This is a command. When the **Enter** key is pressed, the **(CONFIRM)** message is displayed on the fourth line of the LCD. When the **Enter** key is pressed again, the test sequence begins.									
333	Diagnostics	Maintenance	333 Contact Duty Cycle Monitor XX.XXX%	0	NA	NA	NA	NA	NA
• The contact life Duty Cycle Monitor function represents the amount of life consumed, for the worst-case contact, displayed as a percentage of total life. Individual contact wear levels can be interrogated via the user-interface software.									
350	Features	Compact Flash	350 CompactFlash Data Writer	NA	NA	NA	NA	NA	NA
• This is a command to write information to the compact flash card. Refer to the **Advanced Features: Compact Flash Card** section of this manual.									
351	Features	Compact Flash	351 CompactFlash Load Custom Cfg	NA	2	NA	NA	NA	NA
• This is a command to load a custom configuration to the CL-6 control. Refer to the **Advanced Features: Compact Flash Card** section of this manual.									
352	Features	Compact Flash	352 CompactFlash Load Std Config	NA	2	NA	NA	NA	NA
• This is a command to load a standard configuration to the CL-6 control. Refer to the **Advanced Features: Compact Flash Card** section of this manual.									
353	Features	Compact Flash	353 CompactFlash Save Custom Cfg	NA	NA	NA	NA	NA	NA
• This is a command to save a custom configuration from the CL-6 control. Refer to the **Advanced Features: Compact Flash Card** section of this manual.									
354	Features	Compact Flash	354 CompactFlash Save Std Config	NA	NA	NA	NA	NA	NA
• This is a command to save a standard configuration from the CL-6 control. Refer to the **Advanced Features: Compact Flash Card** section of this manual.									
355	Features	Compact Flash	355 CompactFlash Format CF Card	NA	NA	NA	NA	NA	NA
• This is a command to format the compact flash card. Refer to the **Advanced Features: Compact Flash Card** section of this manual.									

Special Functions

Use these functions to perform commands through the menu or function code system.

Master Reset – Function Code 38

Initial Press Reset Message

Entering Function Code 38 or accessing this command via the menu system will cause the LCD to display the following message:

```
038 Master Reset

    (PRESS RESET)
```

While the (PRESS RESET) message is displayed, pressing the **Escape** key causes the LCD to exit the viewing of this command and to display the previous sub-menu items. Or, pressing the **Edit/Reset** button will request a "Confirm" before resetting all demand metering and tap position maximum and minimum values.

Confirm Message

```
038 Master Reset

     (CONFIRM)
```

While the **(CONFIRM)** message is displayed: pressing the Escape key causes the LCD to display the initial **(PRESS** RESET) message; pressing the **Enter** key causes the execution of the command and the LCD will display **(DONE)**.

Done Message

While the **(DONE)** message is displayed:

```
038 Master Reset

      (DONE)
```

pressing the Escape or **Enter** key will cause the LCD to exit the viewing of this command and to display the previous sub-menu items.

Enter Security Code - Function Code 99

Entering Function Code 99 as follows:

```
Function Code
                _99
```

causes the menu system to enter the security code mode:

```
Security Code
               -----
```

This function code does not have an item in the menu system.

Self-Test - Function Code 91

Using the Self-Test, FC 91, will reboot the system. After pressing **Function, 9, 1, Enter** and accessing the FC 91 display, press **Enter** again to select the option and again to confirm. When the reboot is complete, the LCD displays the startup screen. Press **Escape** for further keypad use.

Test LEDs

Access this from the Main Menu (Level 1). With the cursor selecting "Test LEDs" in the main menu, press the **Enter** key and the front panel LEDs will blink three times (the Com port LEDs do not blink).

Turn Display Off

Access this from the Main Menu (Level 1). With the cursor selecting "Turn Display Off" in the main menu, press the **Enter** key and the LCD display will turn off. To turn on the LCD display, press any button in the keypad.

Alarms

Use the nested menu to access the lists of acknowledged and unacknowledged system alarms. No security code is needed to display an alarm; a security code is needed to acknowledge an alarm.

- Alarms/Events > Alarms Active Unacknowledged

  This displays a list of active, unacknowledged system alarms.

- Alarms/Events > Alarms Active Acknowledged

  This displays a list of active, acknowledged system alarms.

This section covers Alarm displays; for more information, see the **Advanced Features: Alarms** section of this manual.

If there are no unacknowledged active alarms available, the LCD displays the following message:

```
No Unacknowledged
Active Alarms
```

If there are no acknowledged active alarms available, the LCD displays the following message:

```
No Acknowledged
Active Alarms
```

An actual alarm display example follows:

```
System Alarm #1 is
Active
01/14/2004 11:35:58a
      (MORE...↓)
```

Status Alarms

The status alarms include the following:

- Supervisory On
- Reverse Power Flow
- Input Voltage Missing
- Output Voltage Missing
- Tap At Neutral
- Voltage Limit Activated
- Regulation Blocked
- Voltage Reduction Activated
- PMT Mode A in Progress
- PMT Mode B in Progress
- Clock Set to Default Time
- Errors During Reset Diagnostics

Data Alarms

Instantaneous Metering Quantities

For most Instantaneous Metering quantities, there are two data alarms available: One that can be triggered for a HIGH threshold value and one that can triggered for a LOW threshold value.

- Load Voltage Secondary High
- Load Voltage Secondary Low
- Source Voltage Secondary High
- Source Voltage Secondary Low
- Comp Voltage High
- Comp Voltage Low
- Load Voltage Primary High
- Load Voltage Primary Low
- Source Voltage Primary High
- Source Voltage Primary Low
- Percent Regulation High
- Percent Regulation Low
- Load Current Primary High
- Load Current Primary Low
- Power Factor Low (only LOW threshold is available)
- kVA Load High
- kVA Load Low
- kW Load High
- kW Load Low
- kvar Load High
- kvar Load Low
- kW·h Forward High (only HIGH threshold is available)
- kW·h Reverse High (only HIGH threshold is available)
- kvar·h Forward High (only HIGH threshold is available)
- kvar·h Reverse High (only HIGH threshold is available)
- Line Frequency High
- Line Frequency Low
- Voltage THD High (only HIGH threshold is available)
- Current THD High (only HIGH threshold is available)

Counter Quantities

For most Counter quantities, there will be only one data alarm that can be triggered for a HIGH threshold value.

- Tap Position Indication High (HIGH and LOW threshold available since this is an up/down counter)
- Tap Position Indication Low
- Total Operations High
- Last 24 Hours Operations High
- Last 30 Days Operations High
- Current Month Operations High
- Last Month Operations High
- Current Year Operations High
- Last Year Operations High

Maintenance Quantities

See the **Advanced Features: Duty Cycle Monitor** section of this manual for more information on these alarms.

- Duty Cycle Monitor Level 1 High
- Duty Cycle Monitor Level 2 High

Events

Use the nested menu to access the lists of events. No security code is needed to display an event; a security code is needed to acknowledge an event.

- Alarms/Events > Events

  This displays a list of system events.

This section covers Event displays; for more information, see the **Advanced Features: Events** section of this manual.

The event labels can use 2 LCD lines for a total of up to 40 characters. An actual event display example follows:

```
Supervisory On

01/14/2004 11:35:58a
```

If there are no events available, the LCD displays the following message:

```
There Are No Events.
```

The events list may include the following:

- User Reset
- Clock Has Been Set
- Factory Calibration Required
- No Data Acquisition
- Tap Raise
- Tap Lower
- Tap at Neutral Position
- Neutral Sync
- Max Tap Position Sync
- Min Tap Position Sync
- Voltage Limit Activated
- Voltage Limiter High
- Voltage Limiter Low
- Voltage Reduction Activated
- SOFT-ADD-AMP High
- SOFT-ADD-AMP Low
- PMT Mode A Auto Wipe Complete
- PMT Mode B Auto Wipe Complete
- Input Voltage Missing
- Input Voltage Restored
- Output Voltage Missing
- Output Voltage Restored

Note: When an alarm is configured to generate an event, the alarm label will be displayed as the event label.

When access through the keypad, only the last 50 events will be displayed. If there are many events (100+) that have not been read via the front panel, it may take a few seconds. Then the following message, indicating that events are being read, may appear before displaying the latest event:

```
Events...
```

Power-Up/Reset Conditions

When the system first comes up and no error conditions are detected, the LCD displays the following message:

```
Self-Test Complete.
(Date/Time Shown)

        (PASS)
```

If error conditions are detected, the LCD may display the following messages:

```
Self-Test Complete.
Factory Calibration
Required!
(ATTENTION...MORE ↓)
```

```
Self-Test Complete.
Data Acquisition!

 (FAILURE...MORE ↓)
```

```
Self-Test Complete.
Configuration Value
Required!
 (ATTENTION...MORE ↓)
```

If the Configuration Value Required! message appears, refer to **Section 3: Initial Programming**. Perform basic programming steps and then initiate a self-test.

```
Self-Test Complete.
Clock Needs Setting!

 (ATTENTION...MORE ↓)
```

```
Self-Test Complete.
Input Voltage
Missing!
 (ATTENTION...MORE ↓)
```

```
Self-Test Complete.
Output Voltage
Missing!
  (FAILURE...MORE  ↓)
```

```
Self-Test Complete.
No Neutral
Sync Signal!
  (ATTENTION...LAST  )
```

Indication Messages

The fourth line of the LCD is used to provide messages associated with menu mode indications. These indication messages can be defined with up to 20 characters.

Displayed during Power-Up/Reset Mode:

- (PASS)
- (ATTENTION)
- (ATTENTION...MORE)
- (ATTENTION...LAST)
- (FAILURE)
- (FAILURE...MORE)
- (FAILURE...LAST)

Displayed when an invalid function code is entered:

- (INVALID FUNCTION)

Displayed when an invalid security code is entered:

- (INVALID SECURITY)

Displayed when a parameter cannot be read, written, or reset because the proper security code has not been entered:

- (IMPROPER SECURITY)

Displayed when edit/reset mode is active:

- (EDIT)
- (CONFIRM) (also displayed to prompt the user when issuing a command from the menu system, i.e., PMT Mode A Issue Test)

Displayed when a value that has been entered is out of the valid range:

- (VALUE TOO HIGH)
- (VALUE TOO LOW)
- (OUT OF RANGE)
- (INVALID DATE)
- (INVALID TIME)

Displayed when listing alarms or events:

- (MORE...)
- (LAST...)

Displayed when the user access Master Reset:

- (PRESS RESET)
- (DONE)

Displayed when an alarm is to be acknowledged or unacknowledged by the user:

- (ACKNOWLEDGE)
- (UNACKNOWLEDGED)

Displayed when the user accesses Compact Flash operations:

- (WRITING)
- (WRITING COMPLETE)
- (WRITING FAILED)
- (WRITING ABORTED)
- (LOADING...)
- (LOADING COMPLETE)
- (LOADING FAILED)
- (LOADING ABORTED)
- (SAVING...)
- (SAVING COMPLETE)
- (SAVING FAILED)
- (SAVING ABORTED)
- (FORMATTING...)
- (FORMATTING COMPLETE)
- (FORMATTING FAILED)
- (FORMATTING ABORTED)

Displayed when indicating that the values for Load Voltage Secondary and Source Voltage Secondary have been derived by the control:

- (CALCULATED)

Displayed when indicating inconsistencies between the neutral signal and Tap Position value entered by the user:

- (TAP AT NEUTRAL)
- (TAP NOT AT NEUTRAL)

System Messages

System messages are used to provide information or feedback to the user about specific conditions. When a system message is displayed, pressing the **Escape** key causes the LCD to restore the viewing of the previous menu context.

The following are system messages for Compact Flash feedback. (For more information on the Compact Flash feature, see the **Advanced Features: Compact Flash Card** section of this manual.) Some of these messages may have an optional numeric code to be displayed on the last line.

```
CompactFlash
Card Format Bad-
Re-Format Card
301
```

```
CompactFlash
Card Not Found-
Insert Card
302
```

```
CompactFlash
Card Failure-
Re-Insert Card
104
```

```
CompactFlash
File Not Found
On Card
402
```

```
CompactFlash
No Space Left
On Card
407
```

```
CompactFlash
Database Version
Mismatch -
Config Not Loaded
```

```
CompactFlash
Config Data Invalid
Re-Load Config
```

```
CompactFlash
(WRITING COMPLETE)
```

```
CompactFlash
(LOADING COMPLETE)
```

```
CompactFlash
(SAVING COMPLETE)
```

```
CompactFlash
(FORMATTING COMPLETE)
```

Metering-PLUS Formats

This section covers Metering-PLUS displays; for more information, see the **Advanced Features: Metering PLUS** section of this manual.

Compensated Voltage

When the ***Comp Voltage** key is pressed while the control is operating under Forward Power Flow conditions, the LCD displays:

```
Comp Voltage    125.0
Band       119.0-121.0
Using Func         1-5
```

If the control is operating under Reverse Power Flow conditions, the LCD displays:

```
Comp Voltage    115.0
Band       108.0-112.0
Using Func        51-55
```

When operating in the Cogeneration Mode, metering always operates in the *forward* direction **except** that load center voltage is calculated based upon the *reverse* line-drop compensation settings when the fixed 1% reverse metering threshold is exceeded. So, the LCD displays:

```
Comp Voltage    123.0
Band       119.0-121.0
Using Func1-3, 54, 55
```

Load Voltage

When the ***Load Voltage** key is pressed while the Voltage Limiting Mode = High and Low Limits Active, the LCD displays:

If Voltage Limiting Mode = Only High Limit, the LCD displays:

```
Load Voltage    115.0
Limiter   119.0-121.0
```

```
Load Voltage    115.0
Limiter         121.0
```

If Voltage Limiting Mode = Off, the LCD displays:

```
Load Voltage    115.0
Limiter           Off
```

Load Current

When the ***Load Current** key is pressed while the control is operating under Forward Power Flow conditions, the LCD displays:

```
Load Current  600 Fwd
Current Threshold  12
Mode   Bi-directional
Blocked:    TB8 - 4&5
```

On the first line, "Fwd" corresponds to Forward Power Flow direction. The third line is used to display one the following operating modes:

- Mode Locked Forward
- Mode Locked Reverse
- Mode Reverse Idle
- Mode Bidirectional
- Mode Neutral Idle
- Mode Cogeneration
- Mode Reactive Bidirectional

If automatic operation is blocked, the fourth line displays one of the following blocking conditions:

- Blocked: Cntrl Switch
- Blocked: Tap-to-Neutral
- Blocked: TB8-4&5
- Blocked: Func Code 069
- Blocked: Rev Pwr Mode

If the control is operating under Reverse Power Flow conditions and automatic tapping is not inhibited, the LCD displays the following:

```
Load Current  200 Rev
Current Threshold   2
Mode Bi-directional
```

Tap Position

When the ***Tap Position** key is pressed while the SOFT-ADD-AMP feature = On, the LCD displays the following:

```
Tap Position          8

SOFT-ADD-AMP  -12, 14
P.I. ADD-AMP  -14, 16
```

If the SOFT-ADD-AMP feature = On and the present tap position indicates that tap-changer is at a limit, the LCD displays the following:

```
Tap Position      - 12
At Limit
SOFT-ADD-AMP  -12, 14
P.I. ADD-AMP  -14, 16
```

If the SOFT-ADD-AMP feature = Off and the present tap position indicates that tap-changer is at neutral, the LCD displays the following:

```
Tap Position          0


P.I. ADD-AMP  -14, 16
```

If the SOFT-ADD-AMP feature = Off and if the tap-changer is at or beyond user-configured P.I. ADD-AMP limits, the LCD displays the following:

```
Tap Position         16
At Limit

P.I. ADD-AMP  -14, 16
```

SECTION 6: CONTROL FEATURES

Calendar/Clock

Integral to several functions of the control is an internal calendar/clock. The digital clock maintains the year, month, day, hour, minute and seconds, within 1 second. The display format is user-selectable (see FC 142 and FC 143). The clock does not adjust for Daylight Savings Time. The control time is synchronized to the system frequency when powered by ac. When ac power is lost, the clock maintains time, for a minimum of 72 hours, by using a crystal oscillator and a capacitor as the power source. Twenty minutes on ac power is required to fully charge the capacitor.

The LCD displays the current date and time at the end of the self-test when the front panel is turned on. However, upon power-up after extended loss of power, the control clock time and date will default to midnight, January 1, 1970.

The date and time can be read and set at FC 50. When setting, all of the digits must be entered using the standard 24-hour format (MM/DD/YYYY hh:mm). If an error is made while entering the values, backspace using either arrow scroll key.

Metering

The control has extensive metering capabilities, which are categorized as Instantaneous, Forward Demand, and Reverse Demand.

Instantaneous Metering

Instantaneous metering values are refreshed once each second. They may be accessed directly at Function Codes 6 through 19, 125, and 126. See Table 5-3 in the **Control Programming** section of this manual for more information on these function codes.

Demand Metering

The control provides demand metering values for these parameters: load voltage, and, for forward and reverse, source voltage, compensated voltage, load current, kVA load, kW load, and kvar load. For each of these parameters the present value, the high value since last reset, and the low value since last reset are recorded, as well as the earliest time and date that the high and low values occurred.

Additionally, the power factor at kVA-high demand and kVA-low demand are recorded. All of these values are stored in non-volatile memory separately for forward and reverse power conditions.

See Table 5-3 in the **Control Programming** section of this manual for information on the function codes associated with demand metering (FC 20-37, 127, and 128).

Demand Task Operation

The demand metering function is based upon a sliding window concept, or moving integral. The algorithm implemented simulates the response of a thermal demand meter which will reach 90% of its final value after one demand interval in response to a step function input. See Figure 6.1.

The task works like this:

1. For 3 minutes after a power outage or power reversal, no demands are calculated. This allows the utility system to stabilize from the event which created the outage or power reversal.
2. At 3 minutes, the present demands (for the appropriate power direction) are set to their corresponding instantaneous value and the integration algorithm begins according to the programmed demand interval at Function Code 46.
3. At 15 minutes or at the demand time interval (whichever is longer), the high/low demand values begin to track the present demand, similar to drag hands. All demand values are calculated continuously and, if a change has occurred, the high/low demands are stored in the non-volatile memory every 15 minutes. This prevents loss of data during a power interruption or outage.

Notice that the provisions are made to reset any demand value by itself via the change/reset key, or all demand values can be reset simultaneously by entering Function Code 38. High and low values will be set to their corresponding present demand value, and the dates and times will be set to the present date/time.

Two conditions can cause the present demands to be invalid: The power has just been applied (within the 3-minute freeze period) or the power flow has changed direction. If the control is metering in the forward direction, the reverse present demands will be invalid; if metering in the reverse direction, the forward present demands will be invalid.

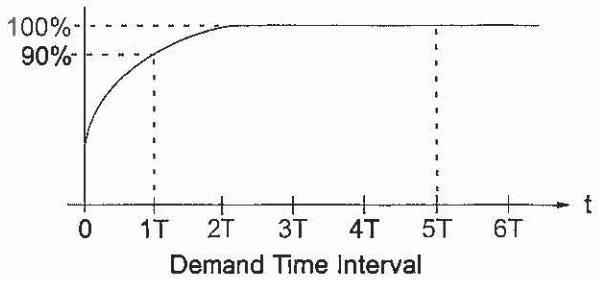

Figure 6-1.
Demand time interval response.

Tap Position Indication

The control has the ability to track the position of the tap-changer. The tap position indication (TPI) function senses the status of the motor and neutral light circuits and does not require source (input) voltage. The present tap position is stored at Function Code 12.

EXAMPLES: "8" at FC 12 indicates 8 raise and "-7" indicates 7 lower.

The TPI function is synchronized to the position of the tap-changer by running the regulator to the neutral position. To manually set the present tap position: Access security level 3; access FC 12; use the Edit key to change to the desired value.

The maximum tap position since last reset (upper drag-hand value of the present tap position) and its date and time are stored at Function Code 27. The minimum tap position since last reset (lower drag hand value of the present tap position) and its date and time are stored at Function Code 28.

The TPI drag hand values and dates/times are reset to the present values by the master reset, FC 38, or by resetting each of the values individually. The drag hand reset switch resets the drag hands of the position indicator only, not TPI. All TPI values are stored in non-volatile memory.

The following conditions could occur if the present tap position was manually set incorrectly:

- The present tap position value will go to invalid "---" if the present tap position is 0 (zero, neutral) but no neutral signal is detected. For example, this condition will occur if a replacement control with present tap position set to "0" is installed on a regulator which is not in the neutral position.
- If the TPI function detects a successful upward tap and the prior value of FC 12 was "16", or a successful downward tap is detected and the prior value of FC 12 was "–16," the prior value will be maintained.

The display will show a diagnostic error message upon power-up when: (1) the present tap position value prior to power-up is "--" (invalid) and the regulator is not in neutral position; (2) The present tap position prior to power-up is "0" and the regulator is not in the neutral position. [This condition will cause the present tap position value to go to invalid ("----")]; and (3) During automatic or manual operation the present tap position changes to "0", but a neutral signal is not received. The **No Neutral Sync** signal is an attention signal, not a failure signal.

The TPI will satisfy the diagnostics routine upon power-up when: (1) The regulator is in neutral and the present tap position is "0"; (2) The present tap position is not "0" and the regulator is not in neutral, including when the tap position is not set correctly; and (3) When the regulator is in neutral and the present tap position is not "0" (TPI will self-correct and reset the tap position).

Source-Side Voltage

Without a source voltage input, some functions will indicate dashes when displayed. There are three methods for supplying a source-side voltage to the CL-6 control: a differential potential transformer (PT), an external source-side PT, or source-side voltage calculation.

Differential Voltage

The regulator may be designed and ordered with an internal differential potential transformer (IDPT). This is noted by the schematic on the voltage regulator nameplate. A differential PT supplies the voltage difference between the source and load bushings of the voltage regulator. This differential voltage is then combined with the load voltage to provide the source-side voltage. When using an IDPT on a Cooper Power Systems voltage regulator, the source voltage accuracy is within ± 1%.

External Source Voltage

An external source-side PT may be connected to the voltage regulator to supply a directly measured source voltage. To use an external source-side PT, the user must change V_{in} PT Configuration, FC 146, from the default Vd_{iff} Mode to V_{in} Mode. Using an external source-side PT may be desirable if the voltage regulators are in a closed-delta configuration. In a closed delta, the source voltage and percent regulation will only reflect the true system source values if an external source voltage is used. Voltage regulator performance is not affected by the difference between metering parameters when using an external source PT: the accuracy of the source voltage is dependent upon the accuracy of the PT.

Source-Side Voltage Calculation

The CL-6A has the ability to calculate the source-side voltage without a series-winding PT or an external PT. When this feature is turned on, the control will use the load voltage from the main PT, the regulator type (Type A or Type B), the tap position, and the internal impedance of the regulator to calculate the source-side voltage. This calculated source voltage is within ±1.5% of actual. Only the regulator type needs to be programmed into the control. The other values are already available to the control.

Reverse Power Operation

Most voltage regulators are installed in circuits with well-defined power flow from source to load. However, some circuits have interconnections or loops in which the direction of power flow through the regulator may change. For optimum utility system performance, a regulator installed on such a circuit should have the capability of detecting reverse power flow and of sensing and controlling the voltage, regardless of the power flow direction.

The control has full reverse power capabilities. For fully automatic reverse operation, the source voltage must be available to the control. Refer to **Source-Side Voltage** in this section of the manual.

The control offers seven different response characteristics for reverse-power detection and operation. These characteristics are user-selectable by programming the Reverse Power Mode (FC 56). The seven modes are Locked Forward, Locked Reverse, Reverse Idle, Bidirectional, Neutral Idle, Cogeneration, and Reactive Bidirectional.

This section will separately explain each mode of operation. Since the control retains the reverse metered demand values separate from the forward metered values, the metering will also be explained for each mode.

In determining power direction, the control senses the real component of the current (except in reactive bidirectional mode), then determines the current direction and magnitude in that direction. When the conditions indicate the power is flowing in reverse, the following parameters assume new values and the control operation is affected accordingly:

Load Voltage — Now sensed from what was previously the source voltage supply.

Source Voltage — Now sensed from what was previously the load voltage supply.

Load Voltage — In the forward direction, the current is used directly as measured. In the reverse direction, the current is scaled to reflect the ratio difference between the source and load side of the regulator, according to this formula:

$$\text{Reverse Load Current} = \frac{\left(\begin{matrix}\text{Forward}\\ \text{Load}\\ \text{Current}\end{matrix}\right)\left(\begin{matrix}\text{Source}\\ \text{Voltage}\\ \text{Supply}\end{matrix}\right)}{\text{Load Voltage Supply}}$$

where source voltage supply and load voltage supply are in the reverse direction.

Based upon the new metered reverse values, kVA, kW, kvar, and % buck/boost are now calculated.

Locked Forward Mode

When Function Code 56 is set for Locked Forward, no source voltage is required. This mode is not intended to be used in applications where reverse power flow is possible.

METERING: Always operates in the forward direction, regardless of power flow direction. If reverse power occurs, the metering functions remain on the normal load side of the regulator—no reverse demand readings will occur.

OPERATION: (Figure 6-2) Always operates in the forward direction. This allows operation down to zero current conditions since there is no forward threshold involved. A safeguard has been built into the control to prevent misoperation in the event reverse power flow does occur. If more than 2% (.004 A CT secondary) reverse current occurs, the control idles on the last tap position held and the band edge indicators will turn off. As the current flow returns to a level above this reverse threshold, normal forward operation resumes.

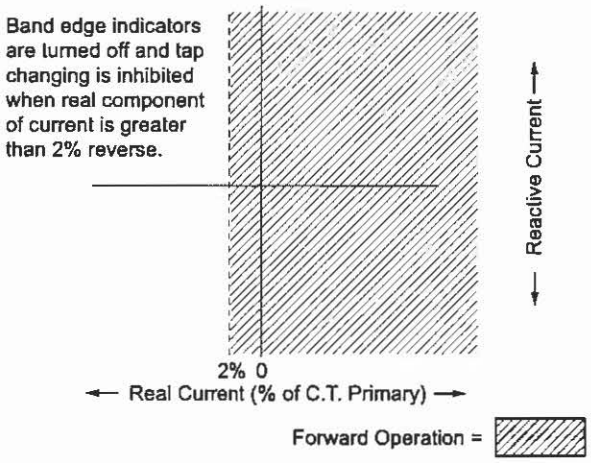

Figure 6-2.
Locked forward mode operation.

Locked Reverse Mode

When Function Code 56 is set for Locked Reverse, source voltage is required. This mode is not intended to be used in applications where forward power flow is possible.

METERING: Always operates in the reverse direction, regardless of power flow direction. If forward power occurs, the metering functions remain on the source (S bushing) side of the regulator and no forward demand readings will occur.

OPERATION: (Figure 6-3) Always operates in the reverse direction using the reverse settings at Function Codes 51, 52, 53, 54, and 55. This allows operation down to zero current conditions since there is no reverse threshold involved. A safeguard has been built into the control to prevent misoperation in the event forward power flow does occur. If more than 2% (.004 A CT secondary) forward current occurs, the control idles on the last tap position held and the band edge indicators will turn off. As the current flow returns to a level above this forward threshold, normal reverse operation resumes.

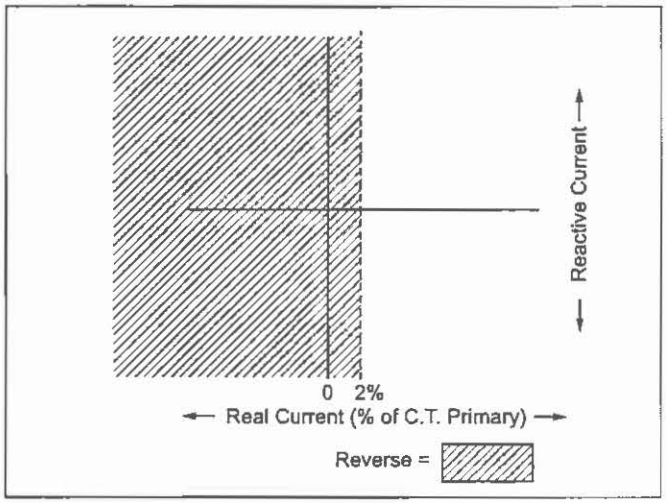

Figure 6-3.
Locked reverse mode operation.

Reverse Idle Mode

When Function Code 56 is set for Reverse Idle, a source voltage is required for metering only. This mode is recommended for installation where reverse power flow may occur, but a source voltage is not available.

METERING: (Figure 6-4.) A threshold level of 1% (.002 A) of the full load CT secondary current (.200 A) is used in setting the power direction. The metering will be forward until the current exceeds the 1% threshold in the reverse direction. At this time, the various parameters use the reverse settings and the Reverse Power indicator turns on. The control continues metering in reverse until the current exceeds the 1% threshold in the forward direction, and then the parameter scaling reverts back to normal and the Reverse Power indicator turns off.

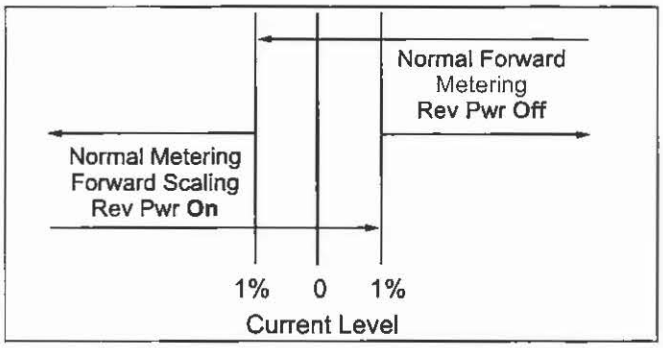

Figure 6-4.
Reverse idle metering.

OPERATION: (Figure 6-5.) The threshold for which the control switches operation is programmable at Function Code 57 over the range 1 to 5% of the rated CT current. When the real component of the current is above this threshold, the control operates in the normal forward direction. When current falls below this threshold, all tap changing is inhibited.

The control idles on the last tap position held before the threshold was crossed. The operational timer (time delay) is reset on any excursion below this threshold, and the band edge indicators turn off.

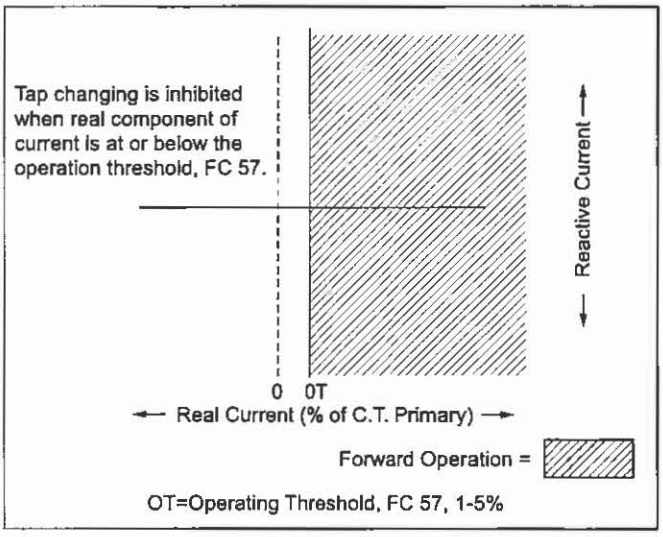

Figure 6-5.
Reverse idle mode* operation.

*Tap changing is inhibited and band edge indicators are turned off.

Bidirectional Mode

When Function Code 56 is set for Bidirectional, source voltage is required. This mode is recommended for all installations where reverse power flow may occur except where the source of reverse power is a cogeneration facility or independent power producer.

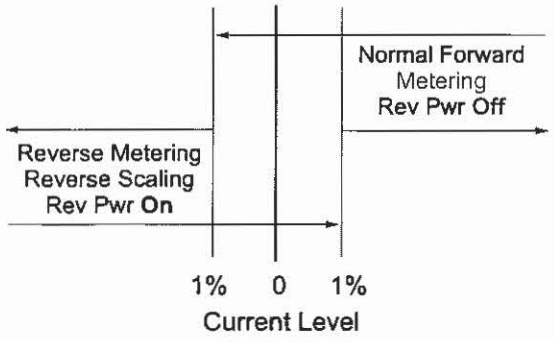

Figure 6-6.
Bidirectional, neutral idle and reactive bidirectional metering.

METERING: (Figure 6-6.) A threshold level of 1% (.002 A) of the full load CT secondary current (.200 A) is used in setting the power direction. The metering will be forward until the current exceeds the 1% threshold in the reverse direction. At this time, the various parameters use the reverse settings and the Reverse Power indicator turns on. The control continues metering in reverse until the current exceeds the 1% threshold in the forward direction, and then the parameter scaling reverts back to normal and the Reverse Power indicator turns off.

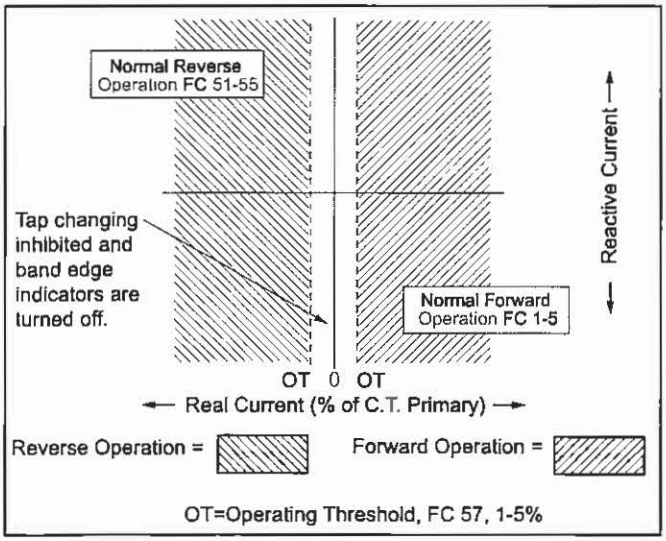

Figure 6-7.
Bidirectional mode operation.

OPERATION: (Figure 6-7.)The control operates in the forward direction whenever the real component of the current is above the operator defined forward threshold (FC 57). The control operates in the reverse direction, using the reverse settings at Function Codes 51, 52, 53, 54, and 55, whenever the current is above the operator defined reverse threshold (FC 57). When the current is in the region between the two thresholds, the control idles on the last tap position held before the current fell below the threshold. The operational timer (time delay) is reset on any excursion below the threshold in either direction, and the band edge indicators turn off.

Neutral Idle Mode

When Function Code 56 is set to Neutral Idle, a source voltage is required.

METERING: (Figure 6-6) A threshold level of 1% (.002 A) of the full load CT secondary current (.200 A) is used in setting the power direction. The metering will be forward until the current exceeds the 1% threshold in the reverse direction. At this time, the various parameters use the reverse settings and the Reverse Power indicator turns on. The control continues metering in reverse until the current exceeds the 1% threshold in the forward direction, and then the parameter scaling reverts back to normal and the Reverse Power indicator turns off.

OPERATION: (Figure 6-8) The control operates in the forward direction whenever the real component of the current is above the operation-defined forward threshold (FC 57). When the current exceeds the operator-defined reverse threshold (FC 57) and is held for 10 continuous seconds, the control will tap to neutral. Neutral position is determined using Tap Position. If the tap position is not valid, neutral is determined using percent regulation (buck and boost). When the current is in the region between the two thresholds, the control idles on the last tap position held before the forward threshold was crossed. While tapping to the neutral position, if the current falls below the reverse threshold, the control continues to tap until neutral position is reached. The operational timer (time delay) is reset on any excursion below the forward threshold, and the band edge indicators turn off.

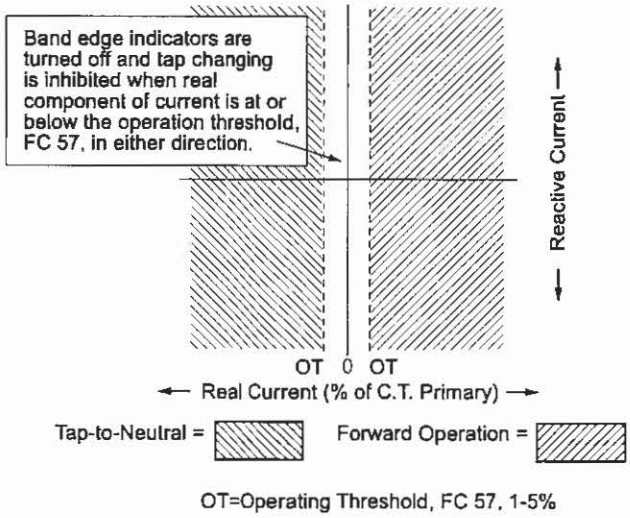

Figure 6-8.
Neutral idle mode* operation.

* Band edge indicators are turned off.

Cogeneration Mode

When Function Code 56 is set for cogeneration, a source voltage is required.

In recent years, there have been a growing number of voltage regulator applications involving cogeneration by the utilities' customers. The cogeneration mode was developed for the Cooper regulator control to satisfy the specialized needs of these applications. Normally, the desired operation of a regulator installed on a feeder involving cogeneration is to regulate the voltage at the customer substation during times of power flow into the customer site and to regulate the voltage at the regulator (on the same output side) during power flow into the utility grid. This is accomplished by simply not reversing the control sensing input voltage when reverse power is detected and by altering the line-drop compensation settings to account for this change in power flow direction. (See Figure 6-9.)

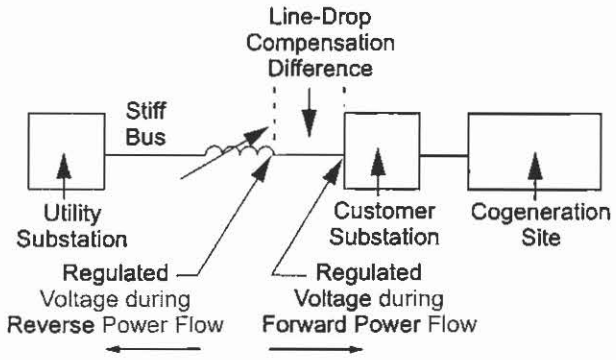

Figure 6-9.
Cogeneration regulation points.

METERING: (Figure 6-10.) Always operates in the forward direction except that load center voltage is calculated based upon the reverse line-drop compensation settings (FC 54 and FC 55) when the fixed 1% reverse metering threshold is exceeded. The Reverse Power indicator turns on when this reverse threshold is crossed. The forward line-drop compensation settings (FC 4–5) are used when the current exceeds the fixed 1% forward metering threshold. The demand values acquired during reverse power flow are stored as reverse metered data, but the values are not scaled (to reflect the other side of the regulator) since the operating direction of the regulator never truly reverses.

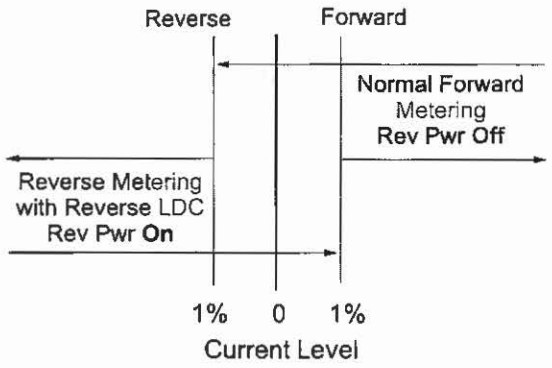

Figure 6-10.
Cogeneration metering.

OPERATION: (Figure 6-11.) The control always operates in the forward direction. The control will operate in the forward direction, but will use the reverse settings for line-drop compensation when the real component of the current is above the fixed 1% reverse metering threshold. The control will continue to use the reverse line-drop compensation settings until the real component of the current is above the fixed 1% forward metering threshold. The operational timer (time delay) is not reset on any transitions between the application of forward and reverse line drop compensation settings.

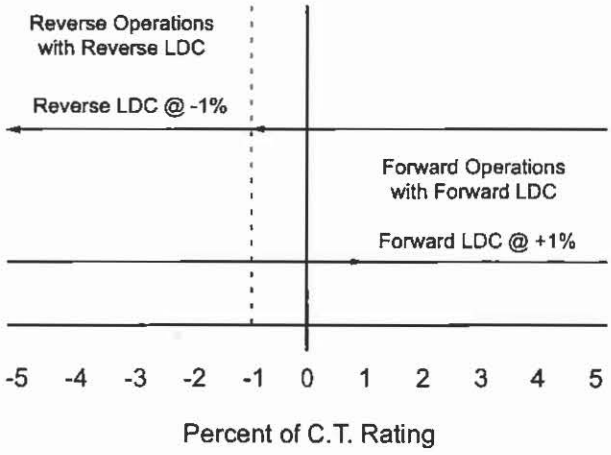

Figure 6-11.
Cogeneration mode operation.

Reactive Bidirectional Mode

When Function Code 56 is set for Reactive Bidirectional, source voltage is required.

This mode is recommended for installations where reverse power flow may occur and the real component of the current is below the operator-defined threshold (FC 57), except where the source of reverse power is a cogeneration facility or independent power producer.

METERING: (Figure 6-12.) A threshold level of 1% (0.002 A) of the full load CT secondary current (0.200 A) is used in setting the power direction. The metering will be forward until the current exceeds the 1% threshold in the reverse direction. At this time, the various parameters use the reverse settings and the Reverse Power indicator turns on. The control continues metering in reverse until the current exceeds the 1% threshold in the forward direction, then the parameter scaling reverts back to the normal and Reverse Power indicator turns off.

OPERATION: (Figure 6-12.) The control determines which settings (forward/reverse) to use by sensing the real and reactive components of the current. The control operates in the forward direction whenever the magnitude of the reactive component of the current exceeds the operator-defined threshold (FC 57) in the negative direction. The control also operates in the forward direction if the magnitude of the real component of the current exceeds the operator-defined threshold (FC 57) in the positive direction while the magnitude of the reactive component of the current is between the operator-defined thresholds (FC 57). The control operates in the reverse direction using the reverse settings at Function Codes 51, 52, 53, 54, and 55 whenever the magnitude of the reactive component of the current exceeds the operator-defined threshold (FC 57) in the positive direction. The control also operates in the reverse direction if the magnitude of the real component of the current exceeds the operator-defined threshold (FC 57) in the negative direction while the magnitude of the reactive component of the current is between the operator-defined thresholds (FC 57).

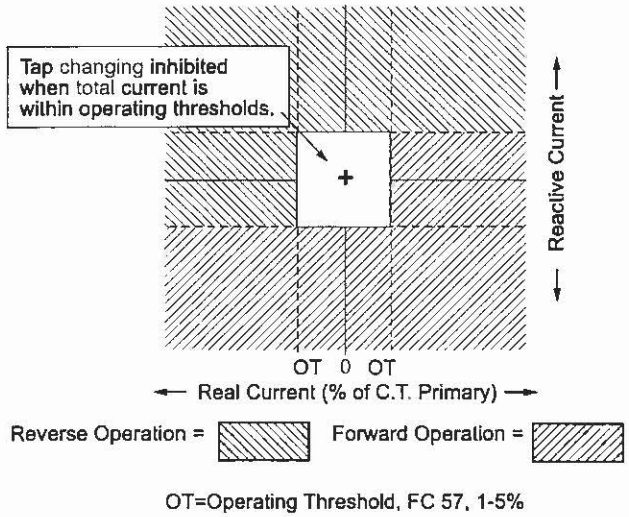

Figure 6-12.
Reactive bidirectional mode operation.

Voltage Limiting

The voltage-limiting feature is used to place both a high and low limit on the output voltage of the regulator. When enabled, it operates in either the forward or reverse directions and has the highest priority of all operating functions. Voltage limiting is overridden only by the operator taking local control or by an inter-connected SCADA system. The purpose of the voltage limiter is to protect the consumer from abnormally high or low voltages resulting from:

- Large, rapid changes in transmission voltage
- Abnormal loading of the feeder
- Inaccurate regulator control settings (voltage level, bandwidth, and line-drop compensation)
- Heavy loading by the first customer while there is a leading power factor on the feeder
- Light loading at the first customer with heavy loading on the feeder at the same time

The appropriate high and low limits for the output voltage can be programmed into the control at Function Codes 81 and 82, respectively. The feature is then activated by accessing Function Code 80 and entering the desired operation: off; high-voltage limiting only; or both high and low limiting. If low-voltage limiting only is desired, Function Code 80 should be set to both high and low limiting to enable this limit and the value programmed into Function Code 81 for the high limit can be set to some extreme number (such as 135) to prevent the high limit from activating.

The control has two response sensitivities. If the output voltage exceeds either the high or low limit by 3 V or more, the control samples the voltage for two seconds and then taps immediately to bring the voltage to the limit value. If the output voltage exceeds either the high or low limit by less than 3 V, the control samples the voltage for 10 seconds then taps to bring the voltage to the limit value. The 10-second delay is used to prevent false responses to transient conditions. The control uses the sequential method of tapping, a two-second pause between taps for voltage sampling, when bringing the voltage back to the limit value. Voltage Limiter High and Voltage Limiter Low indicators in the display indicate when either limit is active.

Voltage Reduction

An ideal application for system load management is at the distribution voltage regulator. Voltage reduction capabilities within the regulator control permit it to trigger the regulator to reduce voltage during situations where power demands surpass the available capacity and where there are extraordinary peak loads. The control offers three modes of voltage reduction: local/digital remote, analog remote, and pulse. All modes operate for forward or reverse power flow conditions.

All voltage reduction modes of the control work by calculating an effective set voltage as follows:

Effective Set Voltage = Set Voltage x [1- (% reduction)]

Example: If the set voltage = 123 V and voltage reduction of 4.6% is active, the regulator will regulate the compensated voltage to 117.3 V, that is, tap down 5.7 V.

When any mode of voltage reduction is in effect, the Voltage Reduction indicator is turned on. Voltage reduction occurs after time out, as established by the time delay, FC 3 or 53, and the Control Operating Mode, FC 42. The percent reduction in effect is displayed at Function Code 71.

Local/Digital Remote Mode

Voltage reduction can be performed by selecting the Local/Digital Remote mode of operation at Function Code 70 and then entering into Function Code 72 the amount of reduction required as a percentage of the set voltage. To turn voltage reduction off, set Function Code 70 to "Off" or set Function Code 72 to 0%.

SOFT-ADD-AMP™ Feature

This feature (FC 79) allows the user to set the regulator for the SOFT-ADD-AMP feature locally at the control as well as remotely through SCADA. The SOFT-ADD-AMP limits can be overridden by a local operator running the tap-changer in manual mode of operation. This is not the case for the "hard" ADD-AMP limit switches on the position indicator face. The SOFT-ADD-AMP feature can be overridden via digital SCADA if the ADD-AMP mode is set to Remote Override.

Supervisory Control and Data Acquisition (SCADA)

With its tap-changer, potential transformer, and current transformer, the regulator is a likely candidate for a Supervisory Control and Data Acquisition system where the utility needs to have centralized voltage control for peak shaving, energy conservation, or other purposes.

Regulators can be connected to Analog SCADA systems where the regulator is controlled by contact closure and the feedback is via a voltage transducer connected to the voltage sensing circuit of the regulator control. The CL-6 control has a number of features which allow it to function well on these types of systems. For details, see **Analog SCADA** in this section.

The CL-6 control is also capable of real-time digital two-way communication. For details, see **Digital SCADA** in this section.

The control is also well suited to the user who does not have a SCADA system but does have a need for detailed information about the bus or feeder loading. For details, see **Data Retrieval and Settings Upload.**

Data Retrieval and Settings Uploading

The communications #1 channel of the CL-6A control is a DB9-style RS232 port located on the front of the control, labeled Com 1. It allows for temporary connection to a PC. Using the interface software, the connection allows the user to reset all metering and tap position maximum and minimum values, upload settings which are specific to the control I.D. number, and view data. The entire control database may be downloaded.

Analysis of the data allows the user to verify the control settings and analyze the conditions of the feeder as follows:

- At the moment of the downloading (instantaneous metering)
- Maximum and minimum demand values since last reset (time-tagged demand metering)
- The profile of salient parameters (profile recorder)

The Channel #1 baud rate is selectable at 300, 600, 1200, 2400, 4800, 9600, 19200, and 38400 Baud. It is factory set to 9600 Baud.

Digital SCADA

Refer to the **Advanced Control Features** section for information on communications and physical interface.

Local Operator Security

Through the communications channel, the SCADA master may read the CL-6A control data points, write to certain data points, or reset certain data points. The technique of writing to a data point is used for performing operations such as changing settings like Set Voltage or Reverse Power Mode, inhibiting automatic operation, or controlling the tap-changer motor, etc. Following is a discussion of the levels of security used to protect the local operator.

Supervisory Switch

The CL-6A control is equipped with a Supervisory On/Off switch. When this switch is in the on position, SCADA may perform the normal read, write, and reset activity. When the switch is in the off position, SCADA may only read the database. This affords protection to the local operator at the front panel, while allowing the system operator to maintain surveillance.

Control Switch

If the local operator switches the control switch (Auto/Remote-Off-Manual) to either Off or Manual, the control internal circuitry prohibits SCADA from controlling the tap-changer motor. Resets and other writes are allowed.

Active Control Security Level

If the local operator changes the control active security level to level 1 or above, or security override is set to override 1 or higher, this does not inhibit any SCADA activity. To inhibit SCADA writes and resets, the local operator should turn the Supervisory switch to Off.

Note: A local operator wishing to check automatic operation should check to make sure that the Blocking Status, FC 69, is set to Normal.

Note: Changes to any of the communications parameters, FC 60–68, take effect immediately, as compared to the CL-4C which required that the power be turned off, then on, to reset those parameters on the separate protocol communications board.

Analog SCADA

The CL-6A can be used with Analog SCADA systems. Discrete inputs 1 through 3 have been programmed by default for use as inputs for voltage reduction and Tap-to-Neutral. The back panel has provisions for remote motor control, auto-inhibiting, and transducer connections.

Discrete Voltage Reduction

During voltage reduction, the control remains in the Automatic mode. See Figures 6-13 and 6-14 for the location of the physical connections. For either of the two modes, Remote Latching and Pulse, a nominal 120 Vac needs to be supplied to either or both discrete inputs 1 and 2 (pins 10 and 11, respectively). Discrete inputs 1 and 2 have been configured as voltage reduction inputs 1 and 2 by default. The user may modify this configuration; see the **Advanced Control Features: Programmable Input and Output** section of this manual.

If the user supplies dry contacts, the voltage should be obtained from pin 14 of the discrete I/O port. This whetting voltage is only available when the control switch is in the **Auto/Remote** position. If the user supplies whet contacts, the connections should be as shown in Figure 6-13.

Analog Remote (Latching) Mode

This feature is set at Function Code 70. Up to three independent values of voltage reduction (VR) are possible. Levels 1, 2, and 3 are programmed at Function Codes 73, 74, and 75, respectively. VR 1 activates the VR programmed at Function Code 73; VR input 2 activates the VR programmed at Function Code 74; and latching both contacts activates the VR programmed at Function Code 75. Each of these function codes may be set from 0.1 to 10.0%.

Pulse Mode

This feature is set at Function Code 70. The same contacts are used for this mode as shown in Figures 6-13 and 6-14, but the contacts are pulsed (momentarily closed) rather than latched closed. Each closure and waiting period between closures is expected to be at least 0.25 seconds in duration.

The number of steps of pulsed reduction, up to 10, is programmed at Function Code 76. The percent reduction per step is programmed at Function Code 77. Starting at zero percent reduction, every time the contact 1 is pulsed, one step of reduction is added to the accumulated total.

EXAMPLE: If the number of steps is 3 and the percent per step is 1.5%, four successive pulses of voltage reduction will cause the following percentages of reduction: 1.5, 3.0, 4.5, and 0. Pulsing to one step higher than the programmed number returns the reduction to zero. Also, any time VR input 2 is pulsed, the reduction returns to zero.

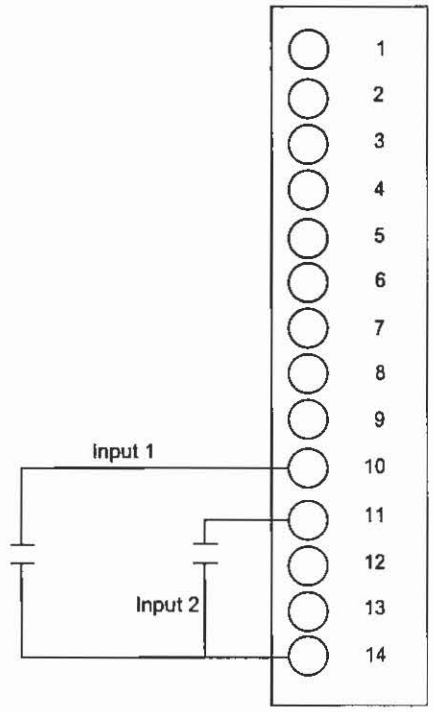

Figure 6-13.
Dry contact connections for remote latching and pulse mode.

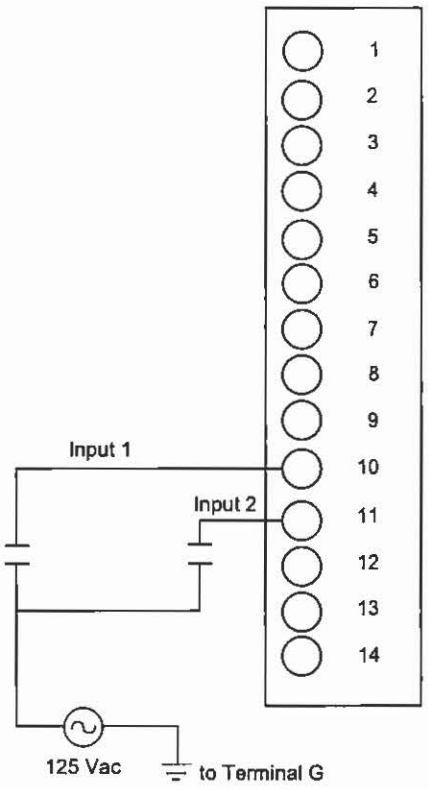

Figure 6-14.
Whet contact connections for remote latching and pulse modes.

Tap-to-Neutral

When activated, the tap-to-neutral feature will automatically take the voltage regulator to the neutral position and then block automatic operation, until the feature is disengaged. By default, to activate the tap-to-neutral feature, FC 170 is set to "On" and 120 Vac is applied to discrete input 3. The setting at FC 170 enables or disables the tap-to-neutral function. The Programmable Input/Output (PIO) tap-to-neutral turns on or off the feature. By default, a PIO equation has been written so that discrete input 3 activates the PIO tap-to-neutral feature. For additional information on PIO, see **Programmable Input and Output** in the **Advanced Control Features** section of this manual.

Remote Motor Control and Auto Inhibit

Terminal board TB_8, located below RCT_1 on the control back panel, is supplied for user-connections for Auto Inhibit (blocking) and Motor Control. See Figure 6-15. When the motor is controlled remotely, it is necessary to inhibit automatic operation. To control Auto Inhibit remotely, remove the jumper between terminals 4 and 5 and supply a nominal 120 Vac to terminal 5. This will inhibit automatic operation.

To remotely raise or lower the tap-changer, the appropriate set of contacts is momentarily closed. An optional SCADA relay (current relay) is recommended if there is any chance that the raise and lower contacts may be closed simultaneously. If user-provided interposing relays are used, such that raise and lower contact closure cannot occur simultaneously, then the SCADA relay is not required. If the SCADA relay is not used, then the operator should make a permanent connection from TB_2-V_9 to TB_8-2.

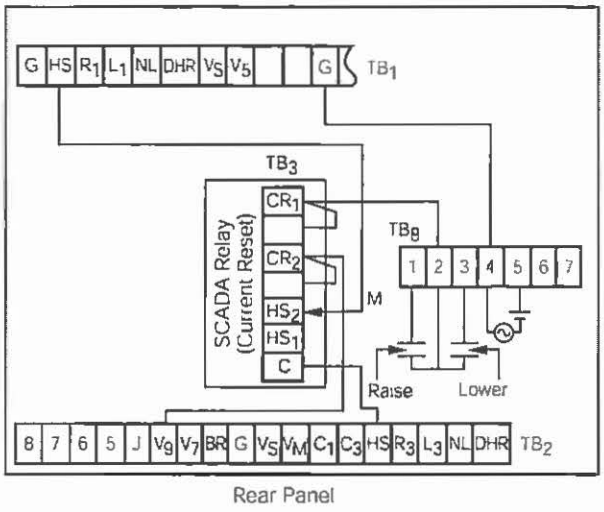

Figure 6-15.
Auto inhibit and remote motor control connections.

Transducer Connections

Refer to Figure 10-4. To monitor the load voltage (forward direction), a transducer, nominal 120 V ac input, may be connected as follows: Connect the transducer hot lead to terminal V4 on TB1 and its ground lead to G on TB_1. A current transducer, 200 mA input, may be connected as follows: Close knife switch C; remove the jumper between C_2 and C_4 on TB_1; connect the transducer hot lead to C_2 and its ground lead to C_4; and open knife switch C.

Fooler Voltage Scheme

Using this method, the voltage sensed by the control is raised, thereby "fooling" the control into reducing the voltage during its normal automatic operation. This method can be used with the CL-6 Series controls. A VR module, as shown in Figure 6-16, is usually supplied by the Remote Terminal Unit (RTU) manufacturer. The VR module is usually a tapped auto-transformer with a pulse-activated indexing relay. When connected to the control back panel as shown, the voltage sensed by the control is raised as the module is pulsed to higher taps.

Since this method keeps the control in automatic operation, Auto-Inhibiting is not used. An advantage of this method is that it can be applied to many different models of controls from many manufacturers. A disadvantage of this method is that while VR is activated, the measured load voltage is incorrect, as are all other calculated metering values which use the load voltage. To avoid the effects of metering inaccuracy, the Pulse Mode of VR should be used.

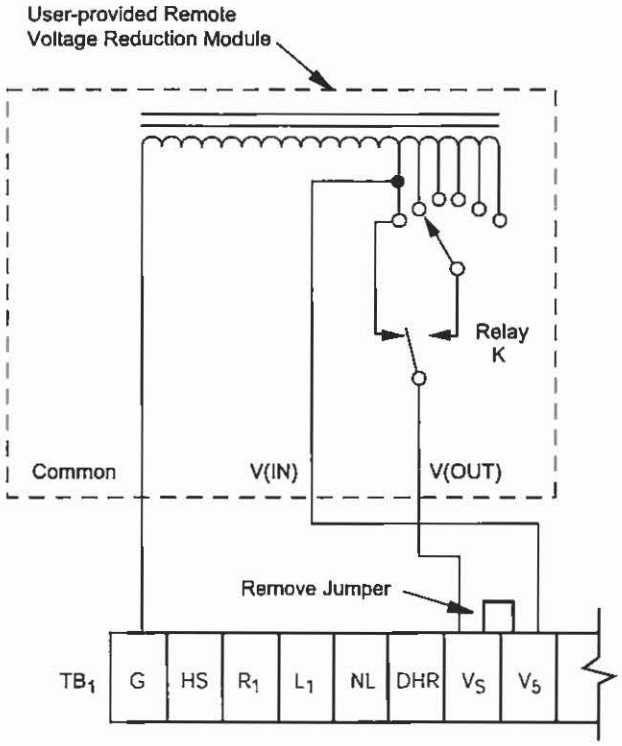

Figure 6-16.
Typical user provided "Fooler Voltage" module.

SECTION 7: ADVANCED CONTROL FEATURES

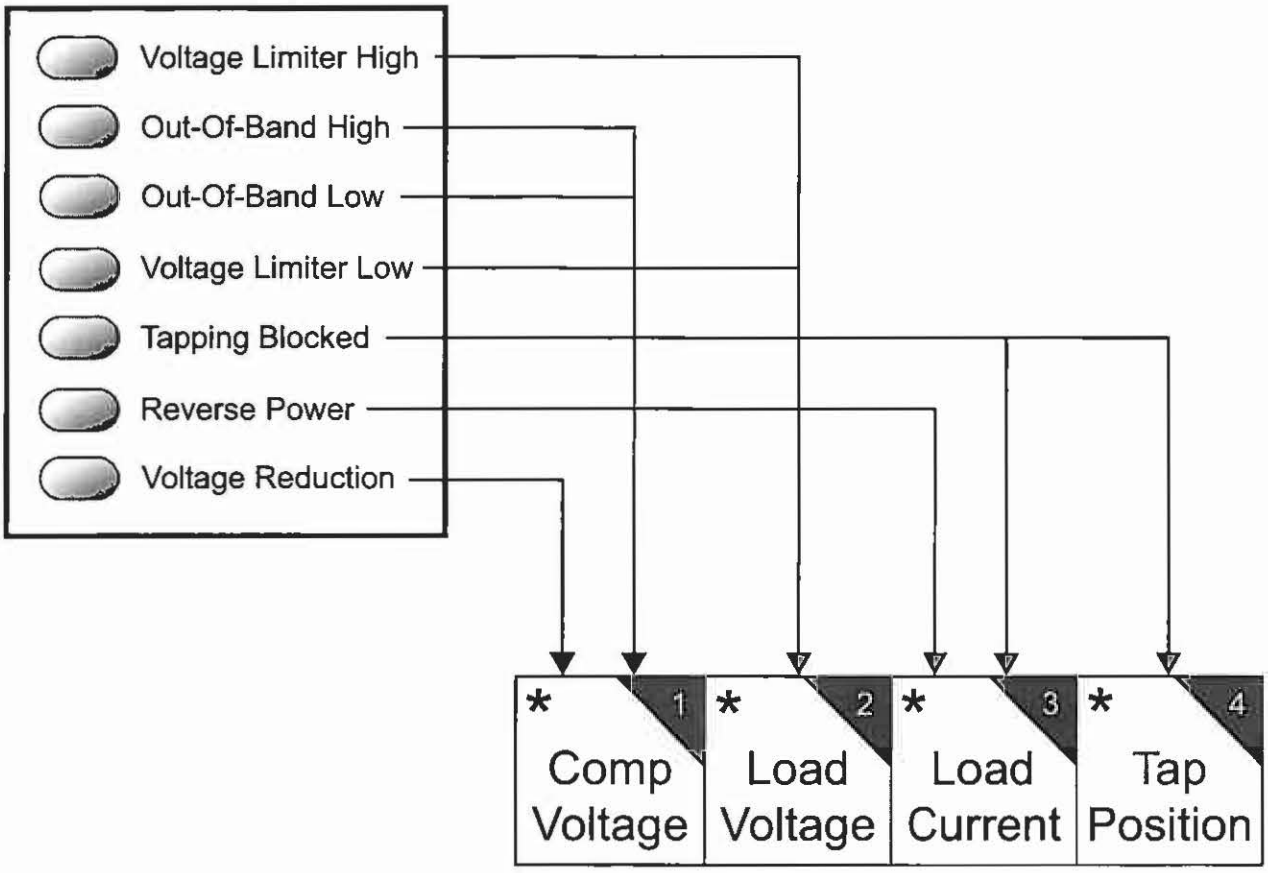

Figure 7-1.
Operation analysis using Metering-PLUS feature.

Metering-PLUS Feature

The Metering-PLUS feature was designed to allow immediate access to basic control information. On the control keypad, four keys display an asterisk (*), identifying them as Metering-PLUS* keys. These keys access information on compensated voltage, load voltage, load current, and tap position.

Compensated Voltage

When the ***Comp Voltage** key is pressed, the LCD will display the following information.

The first line displays a live representation of the compensated voltage. The compensated voltage is available at Function Code 8.

The second line is used to display the in-band compensated voltage range. The voltage range is dependent on four separate parameters: operating mode, metering power direction, set voltage, and bandwidth in the corresponding metering power direction.

The third line specifies the range of configurable function codes that are used to compute the in-band compensated voltage range and the corresponding time delay.

The Out-of-Band High and Out-of-Band Low LEDs are used to indicate an out-of-band condition.

EXAMPLE 1:

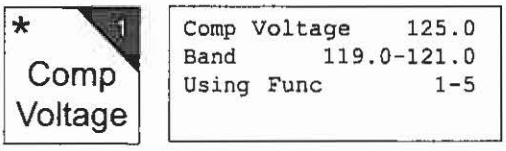

- Compensated Voltage = 125.0 V
- Bidirectional Mode
- Fwd. Set Voltage = 120.0 V
- Fwd. Bandwidth = 2.0 V
- Control experiencing: Forward Power Flow

EXAMPLE 2:

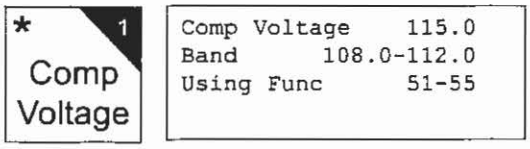

- Compensated Voltage = 115.0 V
- Bidirectional Mode
- Rev. Set Voltage = 110.0 V
- Rev. Bandwidth = 4.0 V
- Control experiencing: Reverse Power Flow

EXAMPLE 3:

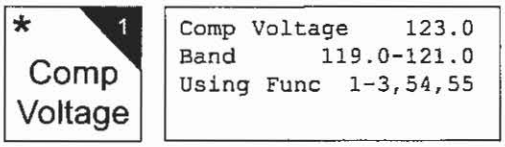

- Compensated Voltage = 123.0 V
- Cogeneration Mode
- Fwd. Set Voltage = 120.0 V
- Fwd. Bandwidth = 2.0 V
- Control experiencing: Reverse Power Flow

Note: When operating in the Cogeneration Mode, metering always operates in the *forward* direction **except** that load center voltage is calculated based upon the *reverse* line-drop compensation settings when the fixed 1% reverse metering threshold is exceeded.

Load Voltage

When the ***Load Voltage** key is pressed, the LCD will display the following information:

The first line displays a live representation of the load voltage. The load voltage is available at Function Code 6.

The second line displays the voltage limits to be applied by the Voltage-Limiting feature (see FC 80). If a voltage range is displayed, a high and low limit is enabled. A single value implies that only the high limit is active.

The Voltage Limiter High and Voltage Limiter Low LEDs are used to indicate the voltage limiter is active.

EXAMPLE 1:

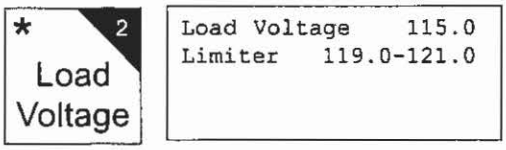

- Load Voltage = 115.0 V
- Voltage-Limiting Mode = High and Low Limits Active
- High Voltage Limit = 121.0 V
- Low Voltage Limit = 119.0 V

EXAMPLE 2:

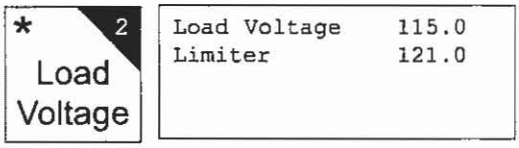

- Load Voltage = 115.0 V
- Voltage-Limiting Mode = Only High Limit Active
- High Voltage Limit = 121.0 V
- Low Voltage Limit = 119.0 V

EXAMPLE 3:

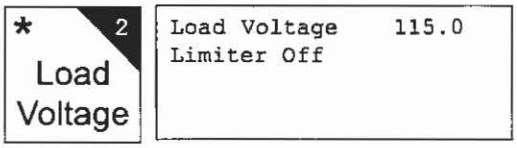

- Load Voltage = 115.0 V
- Voltage-Limiting Mode = Off
- High Voltage Limit = 121.0 V
- Low Voltage Limit = 119.0 V

Load Current

When the ***Load Current** key is pressed, the LCD will display the following information:

The first line displays a live representation of the load current. The load current is available at Function Code 9. This line also includes an abbreviation of the power flow direction: "Fwd" corresponds to Forward, "Rev" corresponds to Reverse.

The second line displays the current threshold point at which the control switches operation, either from forward-to-reverse or reverse-to-forward. The current threshold is the product of the CT Primary Rating, and the Reverse Threshold percentage.

EXAMPLE: A 328 A regulator utilizing a CT with a 400 A primary rating, and a 3% reverse threshold value, would yield a 12 A current threshold.

The third line displays the operating mode: Locked Forward, Locked Reverse, Reverse Idle, Bidirectional, Neutral Idle, Cogeneration, or Reactive Bidirectional

If automatic operation is blocked, the fourth line displays the blocking condition. If multiple blocking conditions exist, the blocking condition with the highest precedence will be displayed. Refer to Table 7-1 for the blocking condition priority levels.

The condition illustrated in Example 1 indicates that automatic operation is inhibited due to an open condition that exists between terminals 4 and 5 of terminal block 8.

TABLE 7-1
Blocking Condition Priority Levels

Level (1 = Highest)	Automatic Blocking Condition	LCD display text (line 4)
1	Control Function Switch is in **Off** or **Manual** position.	Blocked:Cntrl Switch
2	Tap-to-Neutral enabled.	Blocked:Tap-To-Neutr
3	Voltage applied to terminal 5, TB 8.	Blocked: TB8-4&5
4	Blocked due to configuration setting found at FC 69.	Blocked:Func Code 69
5	Blocked due to reverse power flow mode.	Blocked:Rev Pwr Mode

EXAMPLE 1:

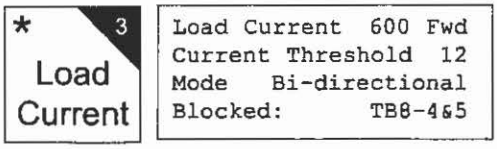

- Load Current = 600 A
- Forward Power Flow
- CT Primary Rating = 400 A
- Reverse Threshold Percentage = 3%
- Bidirectional operating mode
- Voltage applied to Terminal 5, Terminal Block #8. (See Remote Motor Control & Auto Inhibit.)

EXAMPLE 2:

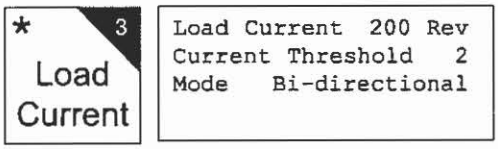

- Load Current = 200 A
- Reverse Power Flow
- CT Primary Rating = 200 A
- Reverse Threshold Percentage = 1%
- Bidirectional operating mode
- Automatic tapping is not inhibited

Tap Position

When the ***Tap Position** key is pressed, the LCD will display the following information:

The first line displays the present tap position. Neutral tap position is represented as a "0". Tap positions lower than zero are denoted with a negative sign; tap positions above zero do not carry a sign.

The second line is used to indicate when the tap changer has reached a SOFT-ADD-AMP limit or a user-configured Position Indicator (P.I.) ADD-AMP limit. In Example 1, the second line is blank because the tap changer is not at an ADD-AMP limit.

If the SOFT-ADD-AMP feature is enabled, the third line is used to display the corresponding SOFT-ADD-AMP limits.

The fourth line is used to display the user-configured P.I. ADD-AMP settings corresponding to the physical position indicator. Since there is no feedback from the position indicator to the control, the control is not capable of confirming the integrity of the user-configured P.I. ADD-AMP values. The control will not prevent tap-changer operation beyond a user-configured P.I. ADD-AMP limit position.

EXAMPLE 1:

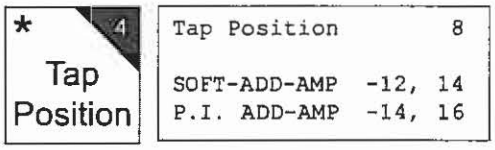

- Present tap position = 8 Raise
- SOFT-ADD-AMP feature = On
- SOFT-ADD-AMP feature lower tap limit = -12
- SOFT-ADD-AMP feature upper tap limit = 14
- User-configured P. I. ADD-AMP lower tap limit = -14
- User-configured P. I. ADD-AMP upper tap limit = 16

EXAMPLE 2:

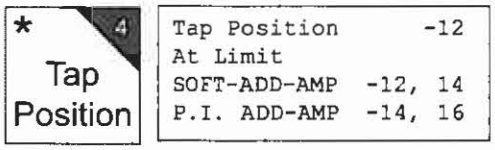

- Present tap position = 12 Lower
- SOFT-ADD-AMP feature = On
- SOFT-ADD-AMP feature lower tap limit = -12
- SOFT-ADD-AMP feature upper tap limit = 14
- User-configured external lower tap limit = -14
- User-configured external upper tap limit = 16

EXAMPLE 3:

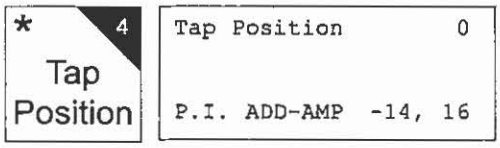

- Present tap position = Neutral
- **SOFT-ADD-AMP feature = Off**
- SOFT-ADD-AMP feature lower tap limit = -12
- SOFT-ADD-AMP feature upper tap limit = 14
- User-configured external lower tap limit = -14
- User-configured external upper tap limit = 16

EXAMPLE 4:

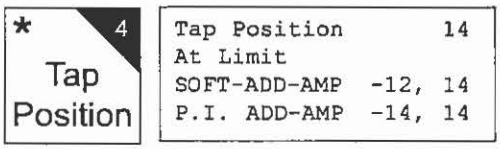

- Present tap position = 14
- SOFT-ADD-AMP feature = On
- SOFT-ADD-AMP feature lower tap limit = -12
- SOFT-ADD-AMP feature upper tap limit = 14
- User-configured external lower tap limit = -14
- User-configured external upper tap limit = 14

Note: Both the SOFT-ADD-AMP feature and the physical ADD-AMP settings on the Position Indicator will prevent any further lower tap changes. This conclusion is based on the assumption that the P.I. ADD-AMP configuration settings, entered by the user, match the physical position indicator limit settings.

EXAMPLE 5:

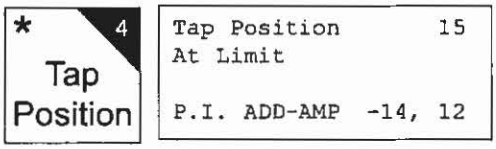

- Present tap position = 15
- **SOFT-ADD-AMP feature = Off**
- SOFT-ADD-AMP feature lower tap limit = -12
- SOFT-ADD-AMP feature upper tap limit = 14
- User-configured external lower tap limit = -14
- User-configured external upper tap limit = 12

Note: User-configured upper "P.I. ADD-AMP" tap limit **does not** match the upper physical tap limit setting on the Position Indicator. Assuming the present tap position is correct, the physical upper P.I. limit must be at either position 15 or 16.

This condition may occur if the user-configured P.I. ADD-AMP limits do not match the physical P.I. ADD-AMP tap position settings. In this example, the regulator is at tap position 15, yet the user-configured upper P.I. ADD-AMP limit is 12. The control will advance the tap-changer beyond the user-configured P.I. ADD-AMP limit settings provided the actual mechanical P.I. limit switches do not prevent the operation. If the tap-changer is at, or beyond, either user-configured "P.I. ADD-AMP" limit, **At Limit** will appear on the second line.

Compact Flash Card

The CL-6 series control has a compact flash (CF) card port located in the front of the control. This port allows the operator to import settings into the control or to save settings and data from the control. Also, firmware upgrades are loaded with a flash card. (Firmware is the software resident in the control that provides processing algorithms and functionality to the hardware. Firmware upgrades are supplied by the factory when revisions are necessary.)

CF cards, readily available at most major electronics retailers, are widely accepted memory devices. The CF card port was designed and tested with a SanDisk® Type I CompactFlash® card. Other manufacturers cards may work, but performance was not evaluated. When the controls save data to the CF card, the files range in size from 20 to 90 KB, depending on what is being saved. While any size CF card may be used, a standard 32 MB CF card is capable of storing hundreds of such files.

The compact flash card replaces the CPS Data Reader. An external flash card reader/writer is necessary to allow for the data to be imported into a computer. Determine the appropriate type of reader/writer, available at most major electronics retailers, for your computer's configuration.

Figure 7-2.
Inserting compact flash card into port.

By inserting a CF card into the port, the operator has the ability to easily transfer information to and from the control. Use care when inserting the CF card into the card port; do not attempt to force the card into position. Align the card in the guide, with the connector toward the control; refer to Figure 7-2. When the CF card is properly seated, the **Flash Card Active** LED will blink.

If a CF card is not inserted and one of the CF functions is accessed, an error message will appear on the display.

Flash Card Functions

Data Writer, FC 350

The Data Writer saves all of the data within the control (metering data, settings, configuration, etc.) in a file with the format "regulator ID-reading #.dat.

EXAMPLE : 12345-001.dat

After inserting a CF card, access FC 350. Press **Enter**. The control LCD will display (CONFIRM). Press **Enter** again to confirm. The **Flash Card Active** LED will illuminate, the LCD will display (WRITING...), and the control will write the data to a file on the CF card. Upon completion, the control will display (WRITING COMPLETE). The CF card may be removed after this message is displayed.

If the command is completed with errors, a (WRITING FAILED) message is displayed on the fourth line of the LCD. If the command is in progress and is aborted via the ESC key, a (WRITING ABORTED) message is displayed on the fourth line of the LCD.

Save Standard Configuration, FC 354

The Save Standard Configuration function saves all of the settings and configuration data to a file labeled "STANDARD.CFG".

EXAMPLE: STANDARD.CFG

After inserting a CF card, access FC 354. Press **Enter**. The control LCD will display (CONFIRM). Press **Enter** again to confirm. The **Flash Card Active** LED will illuminate, the LCD will display (SAVING...), and the control will save the configuration data to the CF card. Upon completion, the control will display (SAVING COMPLETE). The CF card may be removed after this message is displayed.

If the command is completed with errors, a (SAVING FAILED) message is displayed on the fourth line of the LCD. If the command is in progress and is aborted via the ESC key, a (SAVING ABORTED) message is displayed on the fourth line of the LCD.

Save Custom Configuration, FC 353

The Save Custom Configuration function saves all of the settings and configuration data to a file with the format "regulator ID-reading #.CFG".

EXAMPLE : 12345-001.CFG

After inserting a CF card, access FC 353. Press **Enter**. The control LCD will display (CONFIRM). Press **Enter** again to confirm. The **Flash Card Active** LED will illuminate, the LCD will display (SAVING...), and the control will save the configuration data to the CF card. Upon completion, the control will display (SAVING COMPLETE). The CF card may be removed after this message is displayed.

If the command is completed with errors, a (SAVING FAILED) message is displayed on the fourth line of the LCD. If the command is in progress and is aborted via the ESC key, a (SAVING ABORTED) message is displayed on the fourth line of the LCD.

Load Standard Configuration, FC 352

The Load Standard Configuration function loads all of the settings and configuration data from the file labeled with the file titled "STANDARD.CFG".

EXAMPLE : STANDARD.CFG

After inserting a CF card, access FC 352. Press **Enter**. The control LCD will display (CONFIRM). Press **Enter** again to confirm. The **Flash Card Active** LED will illuminate, the LCD will display (LOADING...), and the control will load the configuration data from the CF card. Upon completion, the control will display (LOADING COMPLETE). The CF card may be removed after this message is displayed.

If the command is completed with errors, a (LOADING FAILED) message is displayed on the fourth line of the LCD. If the command is in progress and is aborted via the ESC key, a (LOADING ABORTED) message is displayed on the fourth line of the LCD.

Load Custom Configuration, FC 351

The Load Custom Configuration function loads all of the settings and configuration data from the file labeled with the file format "regulator ID-reading #.CFG".

EXAMPLE : 12345-001.CFG

After inserting a CF card, access FC 351. Press **Enter**. The control LCD will display (CONFIRM). Press **Enter** again to confirm. The **Flash Card Active** LED will illuminate, the LCD will display (LOADING...), and the control will load the configuration data from the CF card. Upon completion, the control will display (LOADING COMPLETE). The CF card may be removed after this message is displayed.

If the command is completed with errors, a (LOADING FAILED) message is displayed on the fourth line of the LCD. If the command is in progress and is aborted via the ESC key, a (LOADING ABORTED) message is displayed on the fourth line of the LCD.

Format Compact Flash Card, FC 355

The Format Compact Flash Card function effectively erases all data on a CF card and prepares the card for use in the CL-6 series control. A card that has not been formatted for use on the CL-6 may not work on the control (i.e., cards used to store digital photos, etc.)

After inserting a CF card, access FC 355. Press **Enter**. The control LCD will display (CONFIRM). Press **Enter** again to confirm. The **Flash Card Active** LED will illuminate, the LCD will display (FORMATTING...), and the control will format the CF card. Upon completion, the control will display (FORMATTING COMPLETE). The CF card may be removed after this message is displayed.

If the command is completed with errors, a (FORMATTING FAILED) message is displayed on the fourth line of the LCD. If the command is in progress and is aborted via the ESC key, a (FORMATTING ABORTED) message is displayed on the fourth line of the LCD.

Communications

Communicate with the CL-6 using the Cooper Control Interface™ CCI™ software or protocols such as DNP3 or 2179. The CCI software, used with a PC, can provide temporary local connection to the control.

Communication Ports

There are three physical communications ports on the CL-6 control.

The communication port Com1 is for use as a temporary local communication connection to the control. Connection is made to Com1 by using a standard 9-pin RS-232 cable to the RS-232 DCE, female, 9-pin connector, located on the front of the control. The port settings are configured at Function Codes 60 through 67. When using the Cooper software, modifications are not normally needed to these settings.

The communication port Com2 is for use as a permanent communication connection to the control. Connection is made by using an optional communication accessory card mounted on the back panel within the control enclosure such as the Fiber Optic/RS-232 accessory. The port settings are configured at Function Codes 60 through 67.

The communication port Com3 is for use as a secondary permanent communication connection to the control. The port shares its data source with the Com1 port and will be inactive if a local connection is made to the Com1 port. Com2 and Com3 may be active simultaneously and can be communicating to two separate master stations. Due to Com3 sharing its data source with Com1, the settings for this port are configured at Function Codes 60 through 67.

There are two logical DNP3 addresses for each port. Normally the port's remote address 2 is used only by the Cooper CCI software for configuration. The port's remote address 1 is designed for interfacing with master stations. It is possible to have two separate masters communicating to the device through a single communication port.

Depending upon the communication system that the control is being implemented into, communication timing may need to be modified. The sync time parameter defines a period of time that the control must idle before recognizing the start of a message. The amount of sync time may need to be increased when the control is placed in a loop (ring) configuration with more than three controls; refer to Figures 7-3 and 7-4.

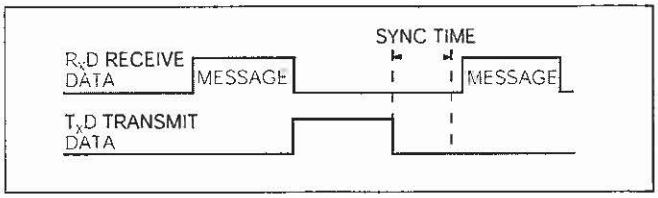

Figure 7-3.
Message received at CL-6A control; message is for the CL-6A control.

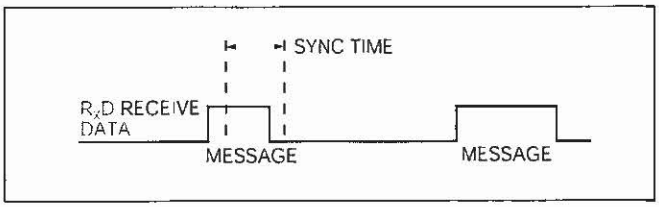

Figure 7-4.
Message received at CL-6A control; message is not for the CL-6A control.

Protocols

There are two protocols resident in the CL-6 control: 2179 and DNP3. While only one protocol can be selected for a single Com port at a time, the two com ports can be set to different protocols. Both of the protocols are highly configurable.

The 2179 ordinal points map is selected at Function Code 266 and the DNP3 data dictionary is selected at Function Code 267. By changing from the default CL-6A to either the CL-5E or CL-5D, the control will look just like a CL-5E or CL-5D to a master station. Therefore, the master does not need to be upgraded unless some of the new functions, not available in the older controls, need to be accessed through remote communications.

A "USER" 2179 ordinal points map setting and a "USER" DNP3 data dictionary setting are also available. These can be configured via remote communications, including Cooper CCI software. This allows the user to create a map to match other existing equipment or optimize for their system as needed. DNP3-related parameters, including Class configuration and deadbands, may also be configured through communications.

Programmable Input and Output

Programmable Input and Output (Programmable I/O or PIO) is a powerful tool since it provides the user with the means to configure general logic equations. These logic equations can be used to perform discrete SCADA functions, modify control function, or add communications data points. PIO can be configured via digital communications software, including the Cooper CCI software. PIO configuration is available via 2179 or DNP3 digital communications protocols.

Inputs and Outputs

Outputs

PORT CONTROL

Discrete Outputs (General Purpose Output 1-4)

User-Defined LED

Tap-changer control (Raise, Lower, Tap-to-Neutral)

Voltage Reduction Input 1 and 2

PMT Mode B Slave Input

Enable Histograms, Profiler, Events, or Alarms

User Forms 1-20

User Intermediate Forms 1-4

Inputs

MODULE STATUS (CONTROL-PROCESSOR PERCEIVED STATES)

Active Alarms

Status Indicators (Tapping Blocked, Reverse Power, etc.)

Control Function Status

Tap At Neutral

No Input Volt Detected

No Output Volt Detected

PMT Status

System Errors

MODULE CONTROL (STATES DECIDED UPON BY THE CONTROL CPU)

Features Enabled (Events, Alarms, Histograms, Profiler)

Supervisory Active

Tap-To-Neutral Input Active

Voltage Reduction 1 Input Active

Voltage Reduction 2 Input Active

PMT Mode B Slave Input Active

Port 1 Tagged

Port 2 Tagged

Port 3 Tagged

PORT STATUS

Port 1 (Physical Input states)

- Drag Hand Reset On
- Neutral Position
- Blocking Relay
- Discrete Inputs (General Purpose Inputs 1-4)
- Tap Raise Switch Active
- Tap Lower Switch Active
- Supervisory Switch On
- Power Switch is Internal
- Power Switch is External
- Control Function Switch Status
- Port 1 PMT Mode B Master Output

Port 2 (Command from communications port 2)

Tap Raise

Tap Lower

Tap-To-Neutral

Features Enabled (Events, Alarms, Histograms, Profiler)

Digital Communications User Inputs (00 to 31)

Port 3 (Command from communications port 1 or 3)

Tap Raise

Tap Lower

STATUS ALARMS

All available Status Alarms

DATA ALARMS

All available Data Alarms

PORT CONTROL

Discrete Outputs (General Purpose Output 1-4)

User-Defined LED

Tap-changer control (Raise, Lower, Tap-to-Neutral)

Voltage Reduction Input 1 and 2

PMT Mode B Slave Input

Enable Histograms, Profiler, Events, or Alarms

User Forms 1-20

User Intermediate Forms 1-4

To configure PIO, the user first selects the output to be performed. Then the logical form of the equation is chosen. Standard AND, OR logical operators may be used in the equation. A more advanced user may also choose to add If-Then, If-Else, If-Else-If, and Timer-based conditional forms within the programmable I/O feature. Lastly, the inputs to the equation are chosen. A total of eighteen different logical inputs may be included in one expression. The inputs or outputs of the expression may be logically inverted.

Discrete Inputs and Outputs (Auxiliary I/O)

The CL-6 provides the user with four discrete inputs and four discrete outputs (Form C contacts); see Figures 7-6 and 7-7. The user can program the CL-6 to use the discrete input states, as well as other internal logic conditions, to determine the operation of the control. Likewise, the user can program the CL-6 to toggle the discrete output states based on internal control logic.

Note: If the CL-6 is being applied in a CRA application, the user may configure discrete inputs #1 through #3. The fourth discrete input must be reserved for use by the control.

EXAMPLE :

A utility noticed that the control function switch and supervisory switch were being left in the incorrect positions for their normal operation. The utility chose the User-Defined LED to be the output of a PIO equation. They used a standard equation with the logical OR operator. Lastly, they chose inputs as the Supervisory Switch On (Inverted) and the Control Status Switch Auto/Remote (Inverted). Refer to figure 7-5.

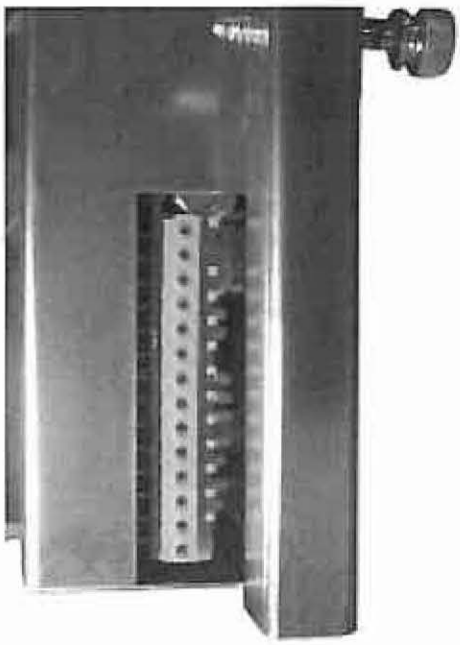

Figure 7-6.
Discrete Input and Output connector.

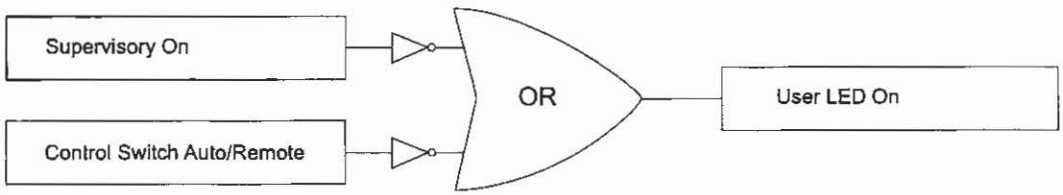

Figure 7-5.
Logic Diagram for the I/O Example.

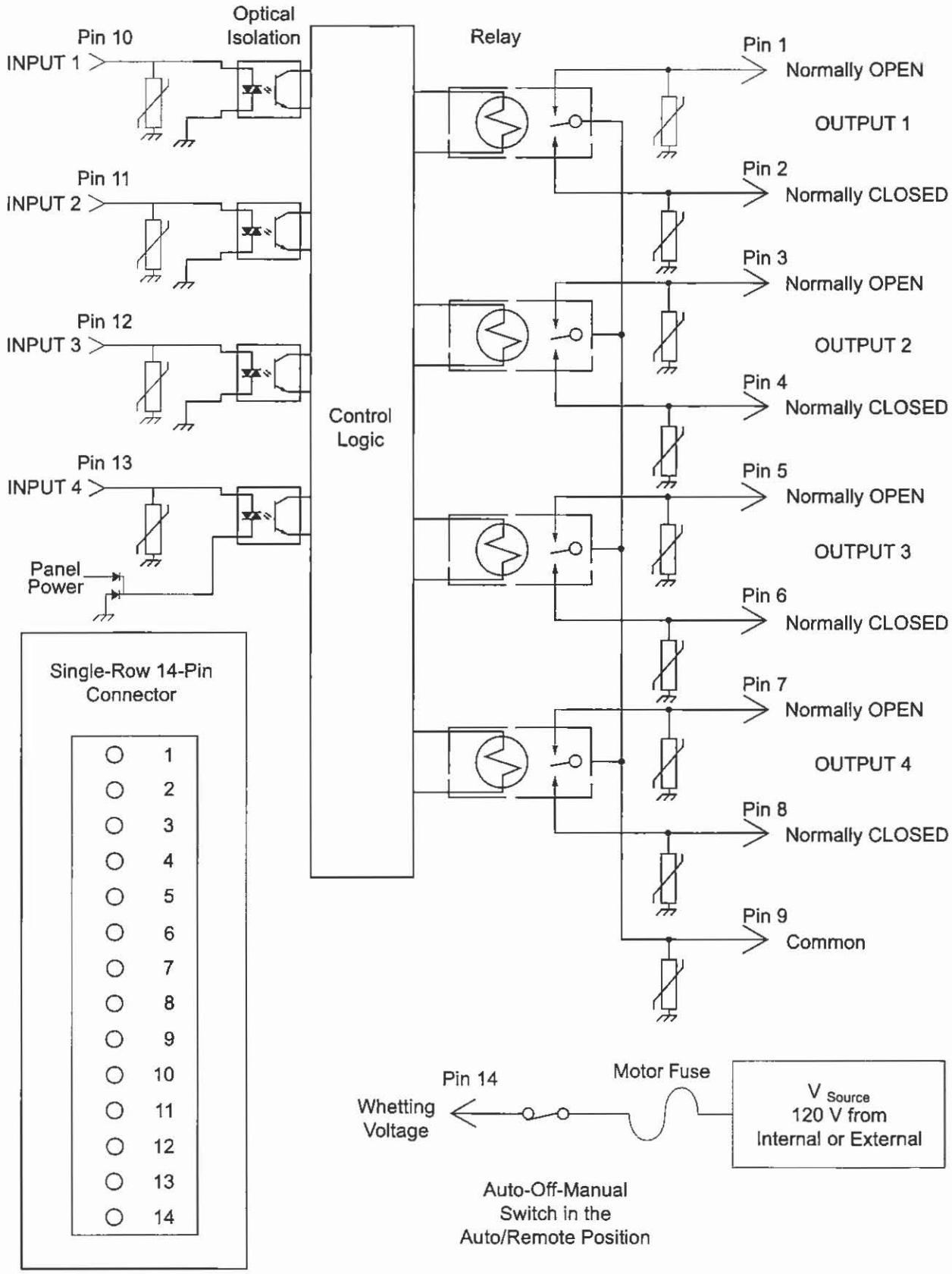

Figure 7-7.
Discrete I/O connections.

Alarms

An alarm is a binary (On/Off) flag that is activated when a user-defined condition is true. The status of an alarm can be viewed on the display or through communications, including the Cooper CCI software. Alarms can only be configured via communications.

The user can define the Priority of an Alarm to cause the **Alarm** LED, **Warning** LED, or no LED to be illuminated. The assigned Priority of the Alarm also determines the order in which the Alarms are viewed via the display.

- Assigning a Priority of 0–50 will cause the Alarm LED to be illuminated when the alarm condition is active.
- Assigning a Priority of 51–100 will cause the Warning LED to be illuminated when the alarm condition is active.
- Assigning a Priority of 101–127 will not cause an LED to be illuminated, but the condition can be viewed on the display or through communications when the alarm condition is active.

A timer can also be set for each alarm. This will allow the alarm to become active only after the timer (in seconds) has expired. When an Alarm becomes Active, it is given the state of Unacknowledged. If the alarm is configured to illuminate an LED, the LED will flash as long as the alarm is Unacknowledged. To acknowledge an alarm, the user enters Alarms > Alarms Active Unacknowledged via the menu, displays the alarm, and presses the **Enter** key twice. If the alarm is configured to illuminate an LED and has been acknowledged, the light will be on continuously. The Alarm will turn off whenever the alarm configuration is no longer true.

The control can also record an Event or take a Profile snapshot whenever an Alarm becomes Active or Inactive. The control contains two types of user-configurable alarms: Status Alarms and Data Alarms.

The Status type is activated based upon the condition of a binary (On/Off) parameter. By default, Status Alarms become active when the parameter is On. The Alarm, however, can be inverted so that it becomes active when the parameter is Off. The following is a list of some of the available parameters for the Status Alarms:

Supervisory Active

Reverse Power Flow

No Input Voltage

No Output Voltage

Tap at Neutral

Voltage Limiter On

Regulation Blocked

Voltage Reduction On

Control Function Switch in Off

Control Function Switch in Manual

Control Function Switch in Auto

EXAMPLE:

Configuring a Supervisory Active Alarm to be inverted with a Priority of 25 will cause the Alarm LED to flash whenever the Supervisory Switch is in the Off position.

The Data Alarm type is activated based upon the condition of an analog (numeric) parameter being above or below a Threshold value. The operations counters and metering values are available as Data Alarms. The following is a list of some of the available Data Alarms:

Secondary Load Voltage High

Secondary Load Voltage Low

Secondary Source Voltage High

Secondary Source Voltage Low

Compensated Voltage High

Compensated Voltage Low

Primary Load Voltage High

Primary Load Voltage Low

Primary Source Voltage High

Primary Source Voltage Low

Percent Regulation High

Percent Regulation Low

Load Current High

Load Current Low

Power Factor Low

Tap Position High

Tap Position Low

Total Operations Count High

Last 24 Hours Operations Count High

EXAMPLE: Configuring a Compensated Voltage Low Alarm with a Threshold of 115 V with a Priority of 75 will cause the Warning LED to flash whenever the Compensated voltage is below 115 V.

Events

An Event is a time-stamped record of an Alarm condition. The last fifty Events can be viewed via the display. The last 300+ Events can be viewed via communications. Events are stored in non-volatile memory.

Profiling

The Data Profiler records the current state of parameters chosen by the user at regular intervals into non-volatile memory. The Data Profiler data can only be viewed and configured via communications. The user can choose to profile as many of the instantaneous and demand (present) parameters as desired. The user can set the sampling interval from 1 minute to 1 day. The greater the number of parameters chosen and the faster the sampling interval, the less overall time will pass before the record begins to be overwritten.

EXAMPLE:

Choosing 10 parameters sampling every 10 minutes will provide over 4,460 samples or over 30 days before data begins to be overwritten. While choosing 40 parameters sampling every 5 minutes, the Data Profiler will only provide over 1550 samples or over 5 days before data begins to be overwritten.

Another consideration when configuring the profiler is that sampling unneeded parameters or unnecessarily often may lessen the life of the non-volatile memory in the control. Sampling 10 parameters every 10 minutes, under normal conditions, the non-volatile memory should last for over 100 years.

Histograms

Histograms offer the user a quick visual method to understand the operation of the voltage regulator. The histogram data and configuration can only be accessed via communications. The histogram data is intended to be viewed in bar graph form. Data is available for Percent Regulation and the following Forward and Reverse demand parameters:

- Primary Load Current
- Secondary Load Voltage
- Secondary Source Voltage
- Secondary Compensated Voltage
- Load kVA
- Load kW
- Load kvar

The histogram is also configured via communications. The user sets a low and high limit for each parameter, creating a range of acceptable values. The control divides this range into 10 equal bins plus one Over and one Under bin for a total of twelve bins; see Figure 7-8.

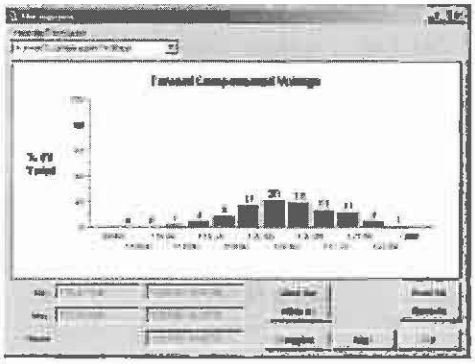

Figure 7-9.
Sample histogram.

EXAMPLE:

The user chooses a low limit of 118 V and a high limit of 122 V for the Compensated Voltage parameter. The control creates bins as shown in Figure 7-8.

The control then samples each of these parameters once per minute and increments the appropriate bin. The maximum and minimum value of the sampled parameter is also stored with the histogram data (note that these values may not be the same as the high and low value in the demand metering section due to the sampling used).

After a period of time has passed, the histogram for this example displays, using Cooper-supplied software to view, as shown in Figure 7-9. The sample Histogram suggests that the compensated voltage is varying greatly. The source of this variation should be investigated. Possible causes include an unstable system supply voltage, improper control settings, or a greatly varying load.

Under	118.0 to	118.4 to	118.8 to	119.2 to	119.6 to	120.0 to	120.4 to	120.8 to	121.2 to	121.6 to	Over
118.0	118.4	118.8	119.2	119.6	120.0	120.4	121.8	121.2	121.6	122.2	122.0

Figure 7-8.
Histogram sampling-bins example.

TIME-ON-TAP™ Feature

The TIME-ON-TAP™ feature logs the amount of time spent on each tap-changer position. The TIME-ON-TAP data is accessed via the CCI™ software and is viewed in bar graph format; see Figure 7-10.

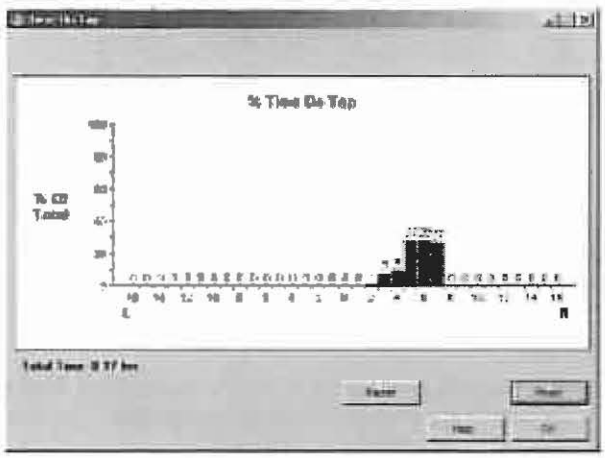

Figure 7-10.
Sample TIME-ON-TAP bar graph.

PMT™ Preventive Maintenance Tapping

PMT™ Preventive Maintenance Tapping will automatically operate the tap-changer based upon user-configured parameters. Under certain operating conditions and load tap-changer contacts can become susceptible to coking. The PMT feature will operate the tap-changer to wipe the contact blades and prevent build-up of carbon. There are two different types of preventive maintenance tapping available: **PMT Mode A** and **PMT Mode B**.

PMT Mode A

When enabled the control monitors tap change and, if it stays on any single tap position for a user-defined period of time (Time Delay, FC 302), the control will automatically raise the tap-changer one position, lower the tap-changer two positions, and then raise the tap-changer one position. When PMT Mode A is performed on a Quik-Drive™ tap-changer, this entire operation will take approximately one second. The user can monitor how much time is left prior to the maintenance tapping being performed at Countdown Delay, FC 301. To sample how the PMT Mode A functions, the user can use Issue Test, FC 303.

PMT Mode B

When enabled, the control monitors tap change and, if it does not pass through neutral for a user-defined period of time (Time Delay, FC 322), the control will automatically tap through and past neutral one position. This operates and wipes the blades of the reversing switch. It then returns the tap-changer to the original tap position. Due to the possible large fluctuation in voltage while maintenance is being performed, there are more configuration points in PMT Mode B than in Mode A. The user can determine the time of day that PMT Mode B is allowed, so that maintenance can be performed at night. To limit the amount of allowable voltage-swing when performing maintenance, the user can input the maximum deviation. Also, the user can input a current limit so that maintenance is only performed under light load conditions. Additionally, a master slave mode is available so multiple units can act at once to keep the supply balanced for three-phase loads that are sensitive to imbalance. The user can monitor how much time is left prior to the maintenance tapping being performed at Countdown Delay, FC 321. To sample how the PMT Mode B functions, the user can use Issue Test, FC 328.

Duty Cycle Monitor

The Duty Cycle Monitor calculates the amount of life used for each arcing surface contact on the voltage regulator Quik-Drive tap-changer. The control uses the metering values, such as current, voltage, power factor, and tap position, and a detailed data on the internal design of the voltage regulator to calculate the interrupting current and recovery voltage. This is then related to the test data for the appropriate Quik-Drive tap-changer. The Duty Cycle Monitor functions only on voltage regulators with a Quik-Drive tap-changer.

Function Code 333 displays the worst-case value of life used, expressed as a percentage, to the third decimal point. This value may be used to generate two different Data Alarms. The first DCM Data Alarm is intended to be configured to that maintenance may be scheduled. The suggested setting is 75%. The second Data Alarm is intended to be set at a higher level, suggested setting of 90%, to notify the user that a service outage due to contact failure may be imminent. For more information on Alarms, see **Alarms** in this section of the manual.

A detailed percentage of life-used for each arcing contact is available via the interface software. When replacing a control on an existing voltage regulator, the interface software must be used to enable and configure the Duty Cycle Monitor feature. Configuration values programmed in the software for the specific voltage regulator include the design number and an estimation of the amount of life already used.

SECTION 8: TROUBLESHOOTING

WARNING: Hazardous voltage. When troubleshooting energized equipment, protective gear must be worn to avoid personal contact with energized parts. Failure to comply can cause serious injury or death. WR-T213.0

When using the CL-6 Control with a CPS regulator, refer to *Service Information S225-10-10* for additional information on the regulator operation and maintenance.

External Check

Examine the power connections first. For example, verify that the load lead is connected to the load-source bushing and that the source-load lead is connected to the source-load bushing. Check for other potential problems, such as an open ground connection.

Defining the Problem

Determine which of the following categories best describes the malfunction and follow the corresponding steps. Refer to the Appendix, Figures 10-1 through 10-4, while diagnosing the problem.

Note: Parameter options, accessed via menu or function code, are shown in **bold**.

Settings of front panel switches are shown in **bold**.

Keypad directions are shown as follows: press keys as shown in **bold**; enter numbers as shown in *italics*.

Control Panel Troubleshooting

No Power

Check the 6 A fuse on the control front panel. Remove the motor fuse from the control and check for continuity across the fuse. Spare fuses are shipped with each control and are located in the control box.

Note: Use only 250 Vac fuses of the proper current rating. Failure to do so may cause unnecessary fuse operation or insufficient protection of the regulator and control.

If the fuse has blown, the tap-changer motor will not run. If the 6 A fuse is okay, set the front panel POWER switch to **Internal Power** and check the following :

1. With a voltmeter, check TB_2-V_S to **G**. The voltage should approximate the set voltage. If the voltage is present at TB_2-V_S, then the problem is in the control. Replace the control.
2. Check the voltage-disconnect knife switch V_1, V_6 (if present), and the current shorting knife switch **C** of the back panel in the control enclosure. Close the V_1 and V_6 voltage switches if open. Open the CT shorting switch if closed.
3. Check the voltage at V_1 to **G**. If the voltage is present at V_1 to **G**, then the problem could be in the wiring harness or ratio-correcting transformer. Check for loose connections or burnt wiring. Verify that the ratio-correcting transformer RCT_1 is on the correct tap for the regulated voltage as shown on the nameplate on the control enclosure door.
4. If voltage is not present, then the problem is either in the control cable, junction box connection, or inside of the regulator.

Self-Diagnostics

The control hardware performs self-diagnostic physical and memory checks. There are two events which force the control into the self-diagnostic routines: (1) Power is turned on; (2) Operator entry of the self-test mode (FC 91).

The duration of this test sequence is approximately three seconds. At completion, the display will indicate **PASS** or display a message (see **Diagnostic Error Messages**, in this section of this manual), depending on the test results. The **PASS** message will remain in the display until the operator makes an entry through the keypad or, after 30 minutes, the display will automatically be turned off.

The clock will maintain time-keeping for at least 24 hours after loss of ac power to control. The backup power source requires 65 hours operation on ac power to become fully charged.

Note: After the self-diagnostic and the LCD displays **PASS**, press **Escape** for further keypad use.

Note: The word **ERROR** on the LCD indicates a key entry error, not a diagnostic failure. See **Indication Messages** in the **Control Programming** section of this manual.

Diagnostic Error Messages

If the control indicates a failure on power up, the LCD displays an error message. This message will give information of what was detected. Also, as long as there is a diagnostic error message, the Diagnostic Error LED indicator will be lit. Messages can include **No Neutral Sync Signal, Input Voltage Missing, and Configuration Value Required.** For more information, refer to **Power-Up/Reset Conditions** in the **Control Programming** section of this manual.

No Neutral Sync Signal

CONTROL NOT INSTALLED ON REGULATOR

This most often occurs when powering up a control on a workbench. The **No Neutral Sync Signal** means the control did not have a neutral signal during the self-test during power up. This can occur because there is no 120 V signal present on the neutral light input. To confirm this and clear the error message, perform the following:

1. **Escape.**
2. **Function**, *99*, **Enter**, *32123* (default), **Enter.**
3. **Function**, *12*, **Enter.**
4. **Edit/Reset**, *(some number from one to 16)*, **Enter.**
5. Initiate a self-test.

   Function, *91*, **Enter**, **Enter**, **Enter.**

   The **(No Neutral Sync Signal)** message should not reappear.

CONTROL ON REGULATOR

If the control is on a regulator and the **(No Neutral Sync Signal)** message appears during power up or self test, or there is no neutral light, check the input signal at **TB_1-NL** to **G**. If the regulator is in neutral, there should be 120 V at the input. When there is not 120 V at **TB_1-NL** while on neutral, the neutral light on the control panel will be off.

If there is no neutral light and no neutral light signal at **TB_1-NL**, verify that the regulator is in neutral. For the regulator to be in neutral, the position indicator should be on neutral and if the regulator is energized there should not be a differential voltage between the source (S) bushing and the load (L) bushing.

When there is no neutral light and the regulator is powered up either by internal or external power, check these input points as follows:

- **TB_2-NL**, located on the bottom terminal board on the control assembly back panel:

  If there in no voltage and there is voltage at **TB_1-NL**, the problem is in the connections in the wiring harness on the back panel. If there is voltage on **TB_2-NL** and no neutral light, the problem is in the control panel.

- **TB_1-NL**, located on the top terminal board on the control assembly back panel:

  If there is no voltage, the problem can be in the connection at this terminal point, the control cable, the connection in the junction box, or inside the regulator.

- **JBB-NL**, located on the terminal board inside the junction box and **TCB-NL**, located on the tap change:

  If there is no voltage, the problem is inside the regulator, either with connection point **JBB-NL** under the cover assembly, connection **TCB-NL** on the tap-changer, neutral light switch, or the neutral light actuator segments.

No Input Voltage

The **(No Input Voltage)** message occurs when no input voltage was sensed and FC 56, Reverse Sensing Mode is not set for **Locked Forward**. The input voltage is the source voltage from a differential or source potential transformer. This voltage signal can also be calculated by the control if FC 39, Source Voltage Calculation is set to **On** and the regulator type is properly set at FC 140, Regulator Type.

When this message is indicated and the regulator has a differential transformer, check for a voltage at **V_8** to **G**, if **V_8** is present. This voltage will be 0.0 V when the regulator is in neutral. The voltage will increase as the regulator is tapped up. When the regulator is at 16 raise, the voltage will be 11.5 to 12 Vac. If there is no input voltage shown at FC 7, Source Voltage Secondary, and the regulator has a differential transformer, the problem could be in the control, back panel connections, control cable, the junction box, the junction box terminal board under the cover, or the differential transformer.

If there is not a differential transformer on the regulator, turn FC 39 to **On** to verify this indicator. This will supply the calculated voltage signal, causing the input voltage diagnostic error message to turn off.

Indication Messages When Using Edit Key

The following indication messages can occur when using the **Edit** key:

- **(Improper Security)** message will display while attempting an edit function when changes are disabled by the security system. To enable, enter a higher security code at FC 99, Security Code:

  Function, *99*, **Enter**, *Security Code*, **Enter.**

  Proceed with function code value and setting changes.

- **(Value Too Low)** means the function value you have entered is below the acceptable limit.

- **(Value Too High)** means the function value you have entered is above the acceptable limit.

For more information, refer to **Indication Messages** in the **Control Programming** section of this manual.

Tap-Changer Operation Troubleshooting

The Regulator Will Not Operate Manually or Automatically

1. Connect a voltmeter between **TB_1-R_1** and TB_1-**G**. Set the CONTROL FUNCTION switch on **Manual.**
2. Toggle the **Raise** switch and measure the voltage between terminals **R_1** and **G** on terminal board **TB_1**. The voltage reading should approximate the set voltage setting.
3. Place the voltmeter hot lead on **TB_1-L_1**, then toggle the **Lower** switch.
4. Measure the voltage between terminals L_1 and **G** on terminal board TB_1. The voltage reading should approximate the set voltage value.
5. If correct voltage readings are obtained in Steps 2 and 4, the trouble may be in the position indicator, junction box, control cable, or motor capacitor. Refer to the junction box troubleshooting section of *Service Information S225-10-10.*
6. If there is no voltage measurement in either Step 2 or 4, make a corresponding measurement (**R_3** to **G** and **L_3** to **G**) on lower terminal board **TB2.**
7. If the voltages measured in Step 6 are approximately the set voltage value, then the fault is likely a loose connection or a faulty terminal between **TB_1** and **TB_2.**
8. If Steps 2, 4, and 6 do not provide voltage readings, measure the voltage between **VM** and G or terminal board **TB_2**. The reading should approximate the set voltage value.
9. If Step 8 does not yield a voltage measurement, check the voltage between **PD_1-1** (V1) and ground (G) at the voltage disconnect knife switch.
10. If Step 8 does not yield a voltage measurement, check the voltage between PD_1-**1** (V1) and ground (G) at the voltage disconnect knife switch.
    - **A.** If the set voltage value is approximately obtained, the **V_1** disconnect or the ratio-correcting transformer (**RCT_1**) of the rear panel signal circuit is probably faulty.
    - **B.** If voltage is not obtained, the trouble is in the control cable, junction box, or regulator tank. Refer to the junction box troubleshooting section of *Service Information S225-10-10.* If the junction box checks are satisfactory, the trouble is in the regulator tank. See *Service Information S225-10-2* and *S225-10-19* for troubleshooting methods.

Motor Capacitor Problem

A problem in the the motor capacitor can prevent a regulator from operating manually or automatically. To check the motor capacitor, use the following steps:

1. Connect a voltmeter from **TB_1-R_1** to **G.**
2. With the control powered up, place the **Auto/Remote/Manual** switch on **Manual.**
3. Using the **Raise/Lower** Switch, give a **Raise** signal.
4. The voltmeter reading should approximate the set voltage.
5. With the voltmeter still connected to **TB_1-R_1** to **G**, give a lower signal.
6. The voltmeter should read a capacitive voltage. This voltage could be somewhere between 60 and 90 Vac.
7. A voltage reading on TB_1-R_1 to **G** of 0 V or reads mV is a sign of a bad capacitor.
8. To double check, place the voltmeter lead on **TB_1-L_1** to **G.**
9. Use the **Raise/Lower** switch, and give a **Lower** signal.
10. The voltmeter reading should approximate the set voltage.
11. With the voltmeter still connected to **TB_1-L_1** to **G**, give a **Raise** signal.
12. The voltmeter should read a capacitive voltage. This voltage could be somewhere between 60 and 90 Vac.
13. A voltage reading on **TB_1-L_1** to **G** of 0 V, or a mV reading, is a sign of a bad capacitor.
14. If both the raise and lower circuit reads 0 V, or a mV reading, when there should be a capacitive voltage, then the motor capacitor is open. The capacitor will need to be replaced.

Operation Counter Does Not Indicate Tap Change

If the operation counter does not indicate tap changes, check the following:

1. The voltage signal at TB_2-R_3 and **L_3** should be approximately 120 V when a tap change is made. When this voltage signal is applied, the control panel operation counter will be updated.
2. Measure the voltage at TB_2-R_3 or **L_3** when the tap-changer is given a command to tap, in manual mode, by the **Raise/Lower** toggle switch. If the voltage signal is present, the problem is either in the control connector or the control.
3. If the voltage signal is not present at TB_2-R_3 or **L_3**, the problem could be in the back panel wiring harness connections at **TB_1-R_1** or L_1, the control cable, junction box connections, or the holding switch on the tap-changer.
4. Check the voltage signal at **TB_1-R_1** or L_1. If the signal is not present at these points; keep tracing the signal back through the components back into the regulator.

Tap Position Out-of-Sync

If the control loses sync with the position indicators (check FC 12, Present Tap Position), then check FC 49, Tap-Changer Type against the nameplate on the regulator. The nameplate indicates what type of tap-changer is on the Cooper Power Systems regulator. FC 49 must be set for the type of tap-changer (Spring Drive, Direct Drive, QD8, QD5, or QD3).

If the control is on a competitors regulator, FC 49 should be set for the manufacturers name.

Regulator Will Not Tap Beyond a Certain Tap Position

If the regulator will not tap beyond a certain tap position, check the limit switch settings on the position indicator. If the limits need to be adjusted, adjust upper and lower limits to allow proper regulation.

The Regulator Operates Manually but Operates Incorrectly When Set On Automatic

Run the regulator to the neutral position with the control switch. Check for voltage between V_4 and **G** on TB_1. This is the sensing circuit supplying voltage from the output of RCT_1 on the rear panel. If this voltage is more than 10% above or below the programmed voltage level setting of the control, then the source is beyond the range of the regulator. An absence of voltage would indicate a wiring problem such as an open somewhere in the control power supply. If these checks are correct, perform the following:

1. If the control will not operate automatically, verify that the band edge indicators are functioning. (These are the **Out-of-Band High** and **Out-of-Band Low** indicators located on the front panel.) If they are not functioning, check FC 56, Reverse Sensing Mode. Set it to **Locked Forward** if it is not there already. Retry the automatic mode of operation.
2. Verify that Function Code 69, Auto Blocking is set to **Normal**. Retry the automatic mode of operation.
3. Measure the voltage from V_S to **G** on lower terminal board TB_2.
   a. A measurement of approximately the set voltage value at V_S to **G** indicates that the problem is in the control.
   b. If there is no voltage present at V_S to **G**, the trouble is in the V_1 disconnect or the ratio-correcting transformer of the back-panel circuit. Replace them.
4. Check the hold switch circuit.
   a. Verify that the tap-changer will complete a tap change by placing the CONTROL FUNCTION switch to **Manual** and toggling the **Raise/Lower** switch in the desired direction.
   b. If the **Raise/Lower** switch must be held in the **Raise** or **Lower** position to complete a tap change, the problem is in the hold switch circuit. If the hold switch is not working, a Quik-Drive tap-changer will do multiple taps until the tap-change time-out occurs.
   c. Check for voltage between TB_2-H_S and **G** and TB_1-H_S and **G**. If voltage is present at TB_1-H_S and not on TB_2-H_S, the problem is in the back panel wiring harness. Replace the orange H_S lead from TB_1-H_S to TB_2-H_S. If no voltage is present at TB_1-H_S, the problem is in the control cable, junction box cover, or the hold switch (located inside the regulator) itself. Check cable continuity up to the junction box. If it appears normal, the problem is the hold switch. Adjust or replace it (see *Service Information S225-10-2* or *S225-10-19*). If all appears to be in order, the problem is most likely in the control, not in the hold switch.

Check Function Code 56, Reverse Sensing Mode

When there is no load current and the regulator will not operate in automatic, check the **C** switch on the back panel. If the **C** switch is closed and FC 56 is set for **Bidirectional**, the regulator will not operate in automatic. The **C** switch should be open for normal operation.

Check Function Code 69, Auto Operation Blocking Status

1. Check the Auto/Remote/Manual switch. The switch should be on **Auto/Remote**.
2. Verify that FC 69 is set to **Normal**. To check the FC 69 setting:

   Function, *69*, **Enter**.
3. If not on **Normal** and resetting is blocked by the security feature, enter the security code via the keypad to change the blocking status:
   a. **Function**, *99*, **Enter** *32123* (default), **Enter**.
   b. **Function**,*69*, **Enter**.
   c. **Edit/Reset**, Scroll to **Normal**, **Enter**.

Check Function Code 170, Tap-to-Neutral

1. Verify that FC 170 is set to **Off**. To check the FC 170 setting:

   Function, *170*, **Enter**.
2. If not on **Normal** and resetting is blocked by the security feature, enter the security code via the keypad to change the blocking status:
   a. **Function**, *99*, **Enter** *12121* (default), **Enter**.
   b. **Function**,*170*, **Enter**.
   c. **Edit/Reset**, Scroll to **Off**, **Enter**.

Testing with the Voltage Limiter ON and a Limit Value Set

CAUTION: Equipment Damage. Be mindful of polarity when using an external source. Polarity reversal will result in control damage. VR-T201.0

When testing a regulator with external power, it is recommended that Function Code 80, Voltage Limiter Mode be set to **Off**.

When testing in the auto mode with the voltage limiter on, there may be problems getting the regulator to operate in either raise or lower direction if the external voltage is greater than the voltage limit settings.

No Band Indicators

If the band indicators are not working when the voltage is out-of-band, check the following:

1. Check FC 56, Reverse Sensing Mode. If FC 56 is set to **Lock Forward** and there is reverse power, the indicator will not display and the voltage will not regulate.
2. Check FC 57, Reverse Current Sense Threshold and ***Load Current** (*Metering PLUS). If the load current is less then the reverse threshold current, the indicators will not work and the regulator will not regulate.
3. If the regulator has been worked on and the current transformer circuit was involved, check the polarity of the current transformer. If the polarity is reversed, the band indicators will not display.

Metering Troubleshooting

Load Voltage Secondary (Output Voltage), Does Not Match the Voltmeter Test Terminal Voltage

When the output voltage at FC 6 is several volts different from what the voltmeter test terminals read, check and verify the following function codes and settings for proper setting per the name plate.

1. Verify FC 43, System Line Voltage (Load Voltage) is set per nameplate value.
2. Verify FC 44, Overall PT Ratio is set per nameplate.
3. Verify **RCT** Control Tap located on the back panel of the control assembly is set per the nameplate.
4. Verify Control Winding **E** Tap and Differential Transformer **P** Taps, if present, are set per nameplate. **E** taps are located on the terminal board on the tap-changer inside the tank. **P** taps may be located on the terminal board on the top of the tap-changer or on the differential potential transformer located on the side channel inside the regulator tank.

When all the settings are set per the nameplate, the regulator is in neutral, and the system line voltage or load voltage is what is stated on the nameplate, the voltmeter test terminals on the control panel will read the value per the nameplate.

No Load Current

When there is no load current reading at FC 9, Load Current, Primary, or any of the metering components requiring current as part of the calculation, check the **C** switch on the back panel. The switch should be open. If the **C** is closed, the current transformer is shorted and no current reading is available.

Regulator Will Not Tap Beyond a Certain Tap Position

If the regulator will not tap beyond a certain tap position and the position indicator limit switches setting are at 16 raise and 16 lower, check the SOFT-ADD-AMP settings: FC 175, SOFT-ADD-AMP High Limit, and FC 176, SOFT-ADD-AMP Low Limit.

Control Calibration

WARNING: Explosion Hazard. Verify that both the neutral light and the position indicator hand indicate neutral when the tap-changer is physically in the neutral position. Lack of synchronization will cause an indefinite indication of NEUTRAL. Without both indications of neutral, bypassing of the regulator at a later time will not be possible, and the line must be de-energized to avoid shorting part of the series winding. Failure to comply can result in serious personal injury or death and equipment damage. VR-T212.0

CAUTION: Equipment Damage. Be mindful of polarity when using an external source. Polarity reversal will result in control damage. VR-T201.0

All controls are factory-calibrated and should not need to be recalibrated by user. However, calibration can be performed for both the voltage and current circuits as follows:

Voltage Calibration

1. Connect an accurate true-RMS-responding voltmeter to the voltmeter terminal. This voltmeter should have a base accuracy of at least 0.1% with calibration traceable to the National Bureau of Standards.

2. Connect a stable 50/60 Hz voltage source (with less than 5% harmonic content) to the External Source terminals.
3. Set the POWER switch to **External**.
4. Adjust the voltage source to provide 120.0 V to the control, as read on the reference voltmeter.
5. Before calibration can be performed, Security Level 3 must be activated by entering the proper security code at FC 99, Security Code.

   Function, *99*, **Enter**; *32123* (default), **Enter**.
6. The display will show the voltage applied to the control. This should correspond to the reading on the reference voltmeter. If the control reading is significantly different, the calibration can be altered by pressing **Edit**, keying in the correct voltage as displayed on the reference meter, and pressing **Enter**. The voltage circuit is now calibrated.

Current Calibration

1. Connect an accurate true-RMS-responding ammeter in series with the current source.
2. Connect a stable 60/50 Hz current source (with less than 5% harmonic content) to the reference ammeter and to the current input terminals C_1 and C_3 on fanning strip TB_2 (C_1 is identified by a red wire, and C_3 is identified as the green wire).
3. To power the control, connect a 120 Vac voltage source to the EXTERNAL SOURCE terminals.
4. Place the power switch on **External**.
5. Adjust the current source to provide 0.200 A to the control, as read on the reference ammeter.
6. Before calibration can be performed, Security Level 3 must be activated by entering the proper security code at Function Code 99, Security Code.

   Function, 99, **Enter**, 32123 (default), **Enter**

   The proper level is now activated.
7. Access Function Code 48, Current Calibration.

   Function, *48*, **Enter**.
8. The display will show the current applied to the control. This should correspond to the reading on the reference ammeter. If the control reading is significantly different (greater than 0.6 mA error), the calibration can be altered by pressing **Edit**, then entering the correct current as displayed on the reference meter, followed by **Enter**. The current circuit is now calibrated.

SECTION 9: CONTROL ACCESSORIES

The CL-6A voltage regulator control has several accessory features available. Accessories available include communications software and hardware, a heater assembly, and a PC-to-dataport cable.

Communications

Software

Cooper Control Interface (CCI) Software

Cooper Power System CCI software was developed as an advanced package to configure, program, and acquire data from CL-4C and later series controls. CCI allows the user to:

- Create control settings
- Upload control settings
- Download control settings
- Provide output of settings and readings
- Manage settings and readings effectively

CCI software is fully compatible with the Microsoft® Windows® 95 or later operating system, with Microsoft® Windows NT® Workstation Version 4.0 or later operating system, and the Microsoft® Windows® XP operating system. Both readings and settings are stored as convenient Microsoft® Excel (.XLS) format files to allow use of the data by other applications without awkward conversions.

CCI software is a user-friendly, graphically oriented program that is easy to use and understand. On-line help and a complete user manual help make the program one of the most comprehensive in the industry. The software is designed for configuration of the regulator control using Data 2179 and DNP3 protocols.

Hardware

Fiber-optic with RS-232 Interface Board

In this configuration, a pair of standard ST type fiber-optic connectors and an RS-232 port are mounted on the interface board to provide the customer connection to digital SCADA via multi-mode fiber-optic cables or a standard 9-pin DB-9 RS-232 cable. Communication settings are easily changed with the use of DIP switches or through the CCI software package. The fiber-optic connections are used for fiber looping (fiber loop or fiber star) with other controllers. The RS-232 interface provides for primary external communication with the control. In the event where multiple controls are being interconnected, only one device requires connection to the RS-232 port, while the remaining devices communicate through the fiber-optic connections. See Figure 9-1 for sample connection diagrams.

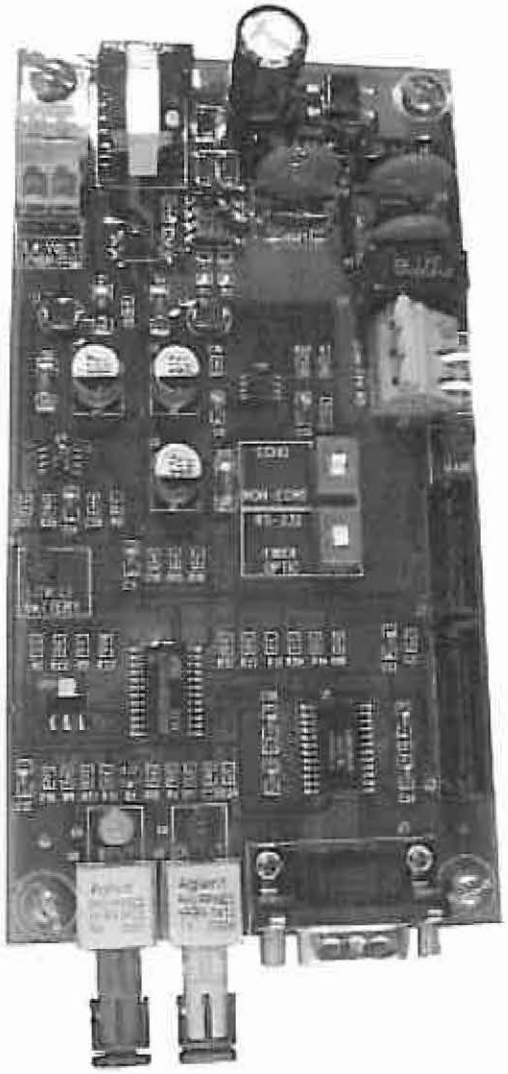

Figure 9-1.
Fiber-optic with RS-232 Interface Board.

RS-485 Interface Board

In this configuration, RS-485 twisted pair terminals are mounted on the interface board to provide the customer connection to digital SCADA via a twisted pair RS-485 connection.

Heater Assembly

A thermostatically controlled heater assembly is available for use in high-humidity areas. The thermostat in the heater assembly will turn the heater on when the temperature falls below 85°F (29°C) and off when the temperature exceeds 100°F (38°C). For full details refer to *Service Information S225-10-1 Supplement 2.*

SECTION 10: APPENDIX

TABLE 10-1
VR-32 Tap Connections and Voltage Levels (60 Hz)

Regulator Voltage Rating	Nominal Single Phase Voltage	Ratio-Adjusting Data			Test Terminal Voltage **	Overall Potential Ratio **
		Internal Tap*	PT Ratio	RCT Tap		
1	2	3	4	5	6	7
2500	2500	-	20:1	120	125	20:1
	2400	-	20:1	120	120	20:1
5000	5000	E_1/P_1	40:1	120	125	40:1
	4800	E_1/P_1	40:1	120	120	40:1
	4160	E_1/P_1	40:1	104	120	34.7:1
	2400	E_2/P_2	20:1	120	120	20:1
7620	8000	E_1/P_1	60:1	133	120.5	80
	7970	E_1/P_1	60:1	133	120	160
	7620	E_1/P_1	60:1	127	120	240
	7200	E_1/P_1	60:1	120	120	320
	6930	E_1/P_1	60:1	115	120.5	480
	4800	E_2/P_2	40:1	120	120	640
	4160	E_2/P_2	40:1	104	120	668
	2400	E_3/P_3	20:1	120	120	20:1
13800	13800	E_1/P_1	115:1	120	120	115:1
	13200	E_1/P_1	115:1	115	120	110.2:1
	12470	E_1/P_1	115:1	104	120	99.7:1
	12000	E_1/P_1	115:1	104	120	99.7:1
	7970	E_2/P_2	57.5:1	133	120	63.7:1
	7620	E_2/P_2	57.5:1	133	120	63.7:1
	7200	E_2/P_2	57.5:1	120	120	57.5:1
	6930	E_2/P_2	57.5:1	120	120	57.5:1
14400	14400	E_1/P_1	120:1	120	120	120:1
	13800	E_1/P_1	120:1	115	120	115:1
	13200	E_1/P_1	120:1	110	120	110:1
	12000	E_1/P_1	120:1	104	115.5	104:1
	7970	E_2/P_2	60:1	133	120	65.5:1
	7620	E_2/P_2	60:1	127	120	63.5:1
	7200	E_2/P_2	60:1	120	120	60:1
	6930	E_2/P_2	60:1	150	120.5	57.5:1
19920	19920	E_1/P_1	166:1	120	120	166:1
	17200	E_1/P_1	166:1	104	119.5	143.9:1
	16000	E_2/P_2	120:1	133	120.5	133:1
	15242	E_2/P_2	120:1	127	120	127:1
	14400	E_2/P_2	120:1	120	120	120:1
	7970	E_3/P_3	60:1	133	120	65.5:1
	7620	E_3/P_3	60:1	127	120	63.5:1
	7200	E_3/P_3	60:1	120	120	60:1
34500	34500	E_1/P_1	287.5:1	120	120	287.5:1
	19920	E_2/P_2	165.5:1	120	120.5	165.5:1

* P taps are used with E taps only on regulators where an internal potential transformer is used in conjunction with the control winding to provide voltage supplies to the control. See nameplate for verification of this type of control supply.
** Test terminal voltage and overall potential ratio may vary slightly from one regulator to another. See the regulator nameplate for determining the exact values.

TABLE 10-2
VR-32 Tap Connections and Voltage Levels (50 Hz)

Regulator Voltage Rating	Nominal Single Phase Voltage	Ratio-Adjusting Data			Test Terminal Voltage **	Overall Potential Ratio **
		Internal Tap*	PT Ratio	RCT Tap		
1	2	3	4	5	6	7
6600	6930	-	55:1	127	119	58.2:1
	6600	-	55:1	120	120	55:1
	6350	-	55:1	115	120.5	52.7:1
	6000	-	55:1	110	119	50.4:1
	5500	-	55:1	104	115.5	47.7:1
11000	11600	E_1/P_1	91.7:1	127	119.5	97:1
	11600	E_1/P_1	91.7:1	120	120	91.7:1
	10000	E_1/P_1	91.7:1	110	119	84.1:1
	6930	E_2/P_2	55:1	127	119	58.2:1
	6930	E_2/P_2	55:1	127	119	55:1
	6930	E_2/P_2	55:1	127	119	52.7:1
	6930	E_2/P_2	55:1	127	119	50.4:1
	6930	E_2/P_2	55:1	127	119	47.7:1
15000	15000	E_1/P_1	60:1	133	120.5	120:1
	14400	E_1/P_1	60:1	133	120	120:1
	13800	E_1/P_1	60:1	127	120	115:1
	13200	E_1/P_1	60:1	120	120	110:1
	12000	E_1/P_1	60:1	115	120.5	104:1
	11000	E_2/P_2	40:1	120	120	92.3:1
	10000	E_2/P_2	40:1	104	120	84.6:1
	8660	E_3/P_3	20:1	120	120	72.9:1
22000	23000	E_1/P_1	115:1	120	120	183.3:1
	22000	E_1/P_1	115:1	115	120	183.3:1
	20000	E_1/P_1	115:1	104	120	168:1
	19100	E_1/P_1	115:1	104	120	159.2:1
	15000	E_2/P_2	57.5:1	133	120	119.8:1
	12700	E_2/P_2	57.5:1	133	120	103.9:1
	11000	E_3/P_3	91.6:1	120	120	91.6:1
	10000	E_3/P_3	91.6:1	120	120	84:1
33000	34500	E_1/P_1	275:1	120	120	291:1
	33000	E_1/P_1	275:1	115	120	275:1
	30000	E_1/P_1	275:1	110	120	252.1:1
	22000	E_2/P_2	183.3:1	104	115.5	183.3:1
	20000	E_2/P_2	183.3:1	133	120	168:1
	11600	E_3/P_3	91.7:1	127	120	97:1
	11000	E_3/P_3	91.7:1	120	120	91.7:1
	10000	E_3/P_3	91.7:1	150	120.5	84:1

* P taps are used with E taps only on regulators where an internal potential transformer is used in conjunction with the control winding to provide voltage supplies to the control. See nameplate for verification of this type of control supply.
** Test terminal voltage and overall potential ratio may vary slightly from one regulator to another. See the regulator nameplate for determining the exact values.

TABLE 10-3
ADD-AMP Capabilities of 60 Hz Ratings

Rated Volts	Rated kVA	†Load Current Ratings (A)				
		Regulation Range (Wye and Open Delta) ±10%	±8.75%	±7.5%	±6.25%	±5%
		Regulation Range (Closed Delta) ±15%	±13.1%	±11.3%	±9.4%	±7.5%
2500	50	200	220	240	270	320
	75	300	330	360	405	480
	100	400	440	480	540	640
	125	500	550	600	668	668
	167	668	668	668	668	668
	250	1000	1000	1000	1000	1000
	333	1332	1332	1332	1332	1332
	416.3	1665	1665	1665	1665	1665
5000	25	50	55	60	68	80
	50	100	110	120	135	160
	100	200	220	240	270	320
	125	250	275	300	338	400
	167	334	367	401	451	534
	250	500	550	600	668	668
	333	668	668	668	668	668
	416.3	833	833	833	833	833
7620*	38.1	50	55	60	68	80
	57.2	75	83	90	101	120
	76.2	100	110	120	135	160
	114.3	150	165	180	203	240
	167	219	241	263	296	350
	250	328	361	394	443	525
	333	438	482	526	591	668
	416.3	548	603	658	668	668
	500	656	668	668	668	668
	667	875	875	875	875	875
	833	1093	1093	1093	1093	1093
13800	69	50	55	60	68	80
	138	100	110	120	135	160
	207	150	165	180	203	240
	276	200	220	240	270	320
	414	300	330	360	405	480
	500	362	398	434	489	579
	552	400	440	480	540	640
	667	483	531	580	652	668
	833	604	664	68	668	668
14400	72	50	55	60	68	80
	144	100	110	120	135	160
	288	200	220	240	270	320
	333	231	254	277	312	370
	416	289	318	347	390	462
	432	300	330	360	405	480
	500	347	382	416	468	555
	576	400	440	480	540	640
	667	463	509	556	625	668
	720	500	550	600	668	668
	833	578	636	668	668	668
19920	100	50.2	55	60	68	80
	200	100.4	110	120	135	160
	333	167	184	200	225	267
	400	200.8	220	240	270	320
	500	250	275	300	338	400
	667	335	369	402	452	536
	833	418	460	502	564	668
	1000	502	552	602	668	668
34500	172.5	50	55	60	68	80
	345	100	110	120	135	160
	517	150	165	180	203	240
	690	200	220	240	270	320

†55/65°C rise rating on VR-32 regulators gives an additional 12% increase in capacity if the tap-changer's maximum current rating has not been exceeded. For loading in excess of the above values, please refer to your Cooper Power Systems representative.
* Regulators are capable of carrying current corresponding to rated kVA when operated at 7200 V.

TABLE 10-4
ADD-AMP Capabilities of 50 Hz Ratings

Rated Volts	Rated kVA	†Load Current Ratings (A)				
		Regulation Range (Wye and Open Delta) ±10%	±8.75%	±7.5%	±6.25%	±5%
		Regulation Range (Closed Delta) ±15%	±13.1%	±11.3%	±9.4%	±7.5%
6600	33	50	55	60	68	80
	66	100	110	120	135	160
	99	150	165	180	203	240
	132	200	220	240	270	320
	198	300	330	360	405	480
	264	400	440	480	540	640
	330	500	550	600	668	668
	396	600	660	668	668	668
11000	55	50	55	60	68	80
	110	100	110	120	135	160
	165	150	165	180	203	240
	220	200	220	240	270	320
	330	300	330	360	405	480
	440	400	440	480	540	640
	550	500	550	600	668	668
	660	600	660	668	668	668
15000	75	50	55	60	68	80
	150	100	110	120	135	160
	225	150	165	180	203	240
	300	200	220	240	270	320
	450	300	330	360	405	480
	600	400	440	480	540	640
	750	500	550	600	668	668
22000	110	50	55	60	68	80
	220	100	110	120	135	160
	330	150	165	180	203	240
	440	200	220	240	270	320
	660	300	330	360	405	480
	880	400	440	480	540	640
33000	165	50	55	60	68	80
	330	100	110	120	135	160
	495	150	165	180	203	240
	333	231	254	277	312	370
	660	200	220	240	270	320

†55/65°C rise rating on VR-32 regulators gives an additional 12% increase in capacity if the tap-changer's maximum current rating has not been exceeded. For loading in excess of the above values, please refer to your Cooper Power Systems representative.

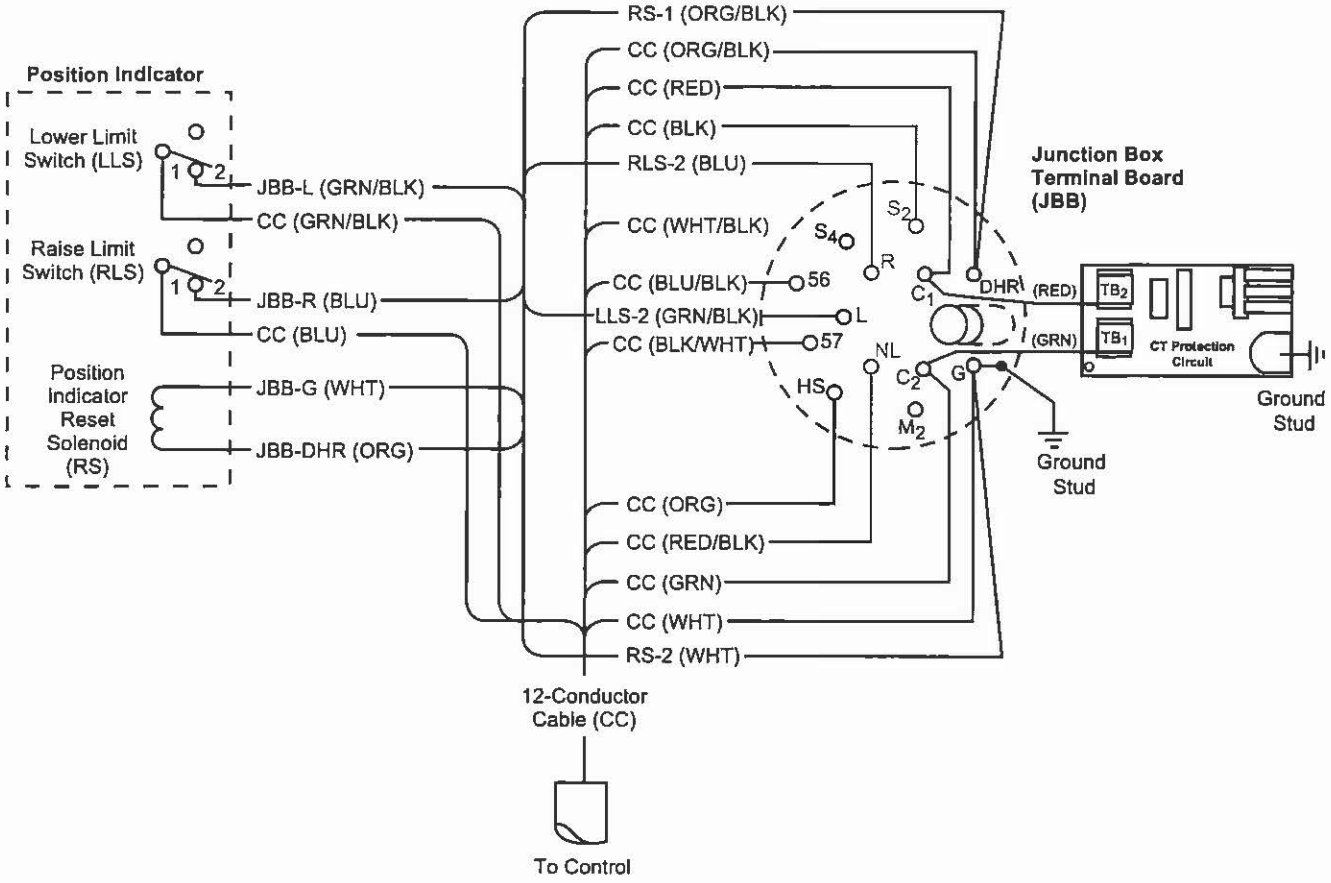

Figure 10-1.
Junction box wiring diagram.

DF - Differential Voltage Fuse
DHR - Drag Hand Reset
EST - External Source Terminal
HSL - Holding Switch Lower
HSR - Holding Switch Raise
IRS - Indicator Reset Solenoid (Position Indicator)
JB - Junction Box on Regulator Cover
JBB - Junction Box Terminal Board on cover
LLS - Lower Limit Switch (Position Indicator)
MO - Motor Capacitor
MF - Motor Fuse
MOV - Metal Oxide Varistor
NL - Neutral Light
NLS - Neutral Light Switch
PD - Potential Opening Device
PF - Panel Fuse
PS - Power Switch
RCT - Ratio-Correcting Transformer
RLS - Raise Limit Switch (Position Indicator)
SCP - Short Circuit Protection
SD - Current Shorting Device
TB - Control Terminal Board
TCB - Tap-Changer Terminal Board
VM - Motor Voltage
VS - Sensing Voltage
VTT - Voltage Test Terminal

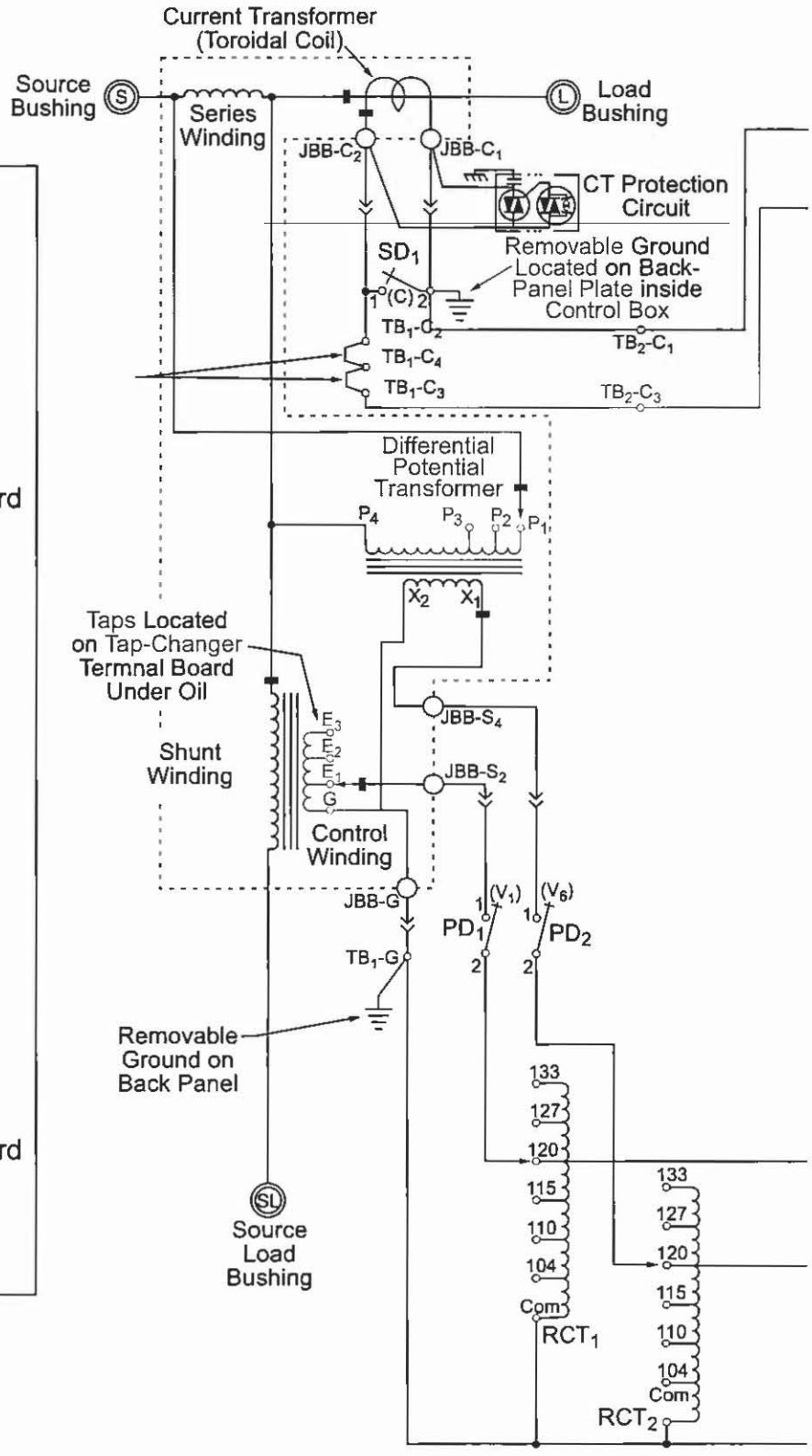

Figure 10-2.
Wiring diagram for Type B VR-32 Regulator and CL-6 control with differential potential transformer.

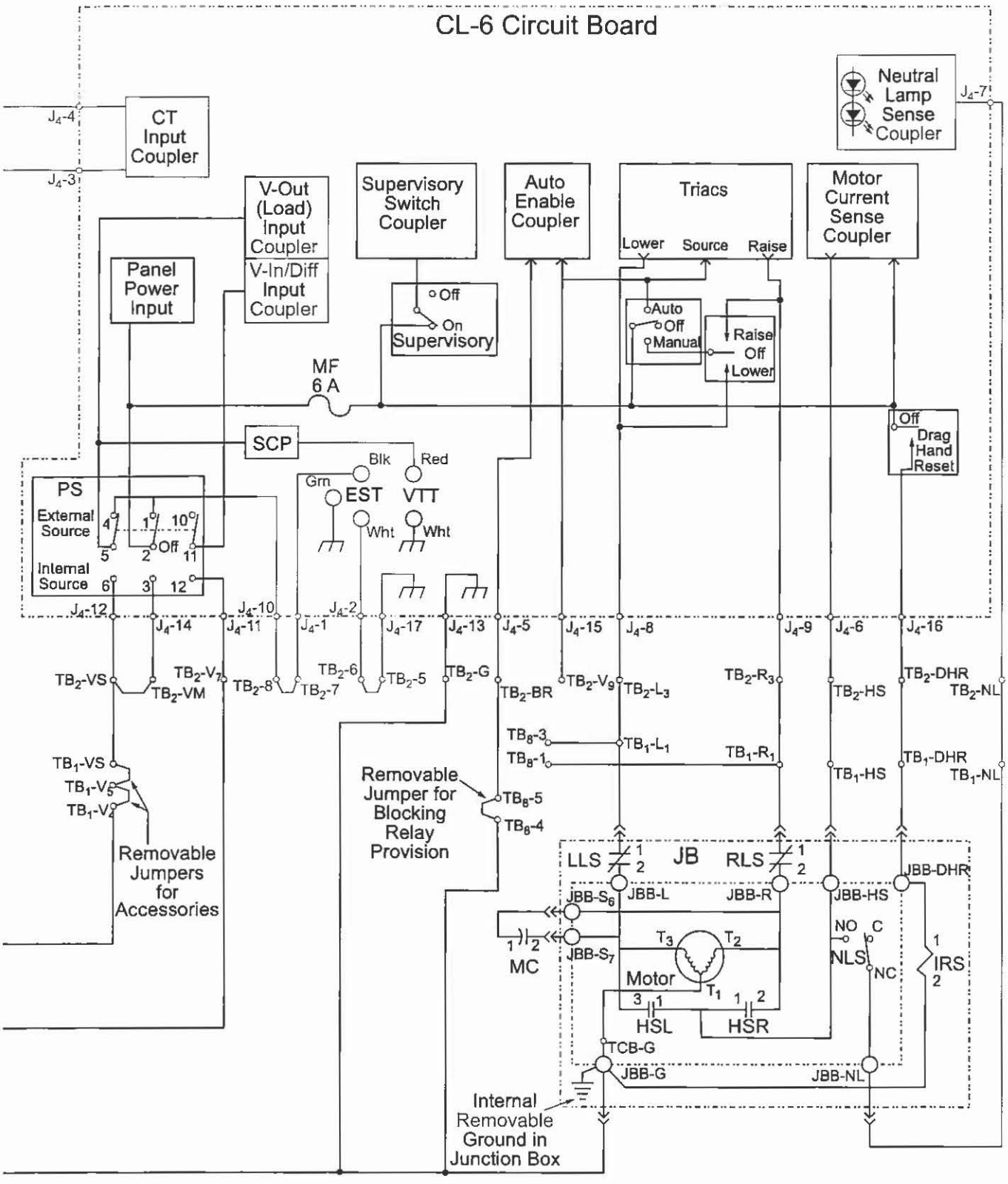
CL-6 Circuit Board
CT Input Coupler
V-Out (Load) Input Coupler
V-In/Diff Input Coupler
Panel Power Input
Supervisory Switch Coupler
Auto Enable Coupler
Triacs
Lower
Source
Raise
Motor Current Sense Coupler
Neutral Lamp Sense Coupler
Off
On Supervisory
Auto
Off
Manual
Raise
Off
Lower
MF 6 A
SCP
Off
Drag Hand Reset
PS
External Source
Internal Source
Blk
Red
Grn
EST
VTT
Wht
Wht
Removable Jumpers for Accessories
Removable Jumper for Blocking Relay Provision
JB
LLS
RLS
JBB-DHR
JBB-HS
JBB-L
JBB-R
JBB-S6
JBB-S7
MC
Motor
NLS
IRS
HSL
HSR
TCB-G
JBB-G
JBB-NL
Internal Removable Ground in Junction Box

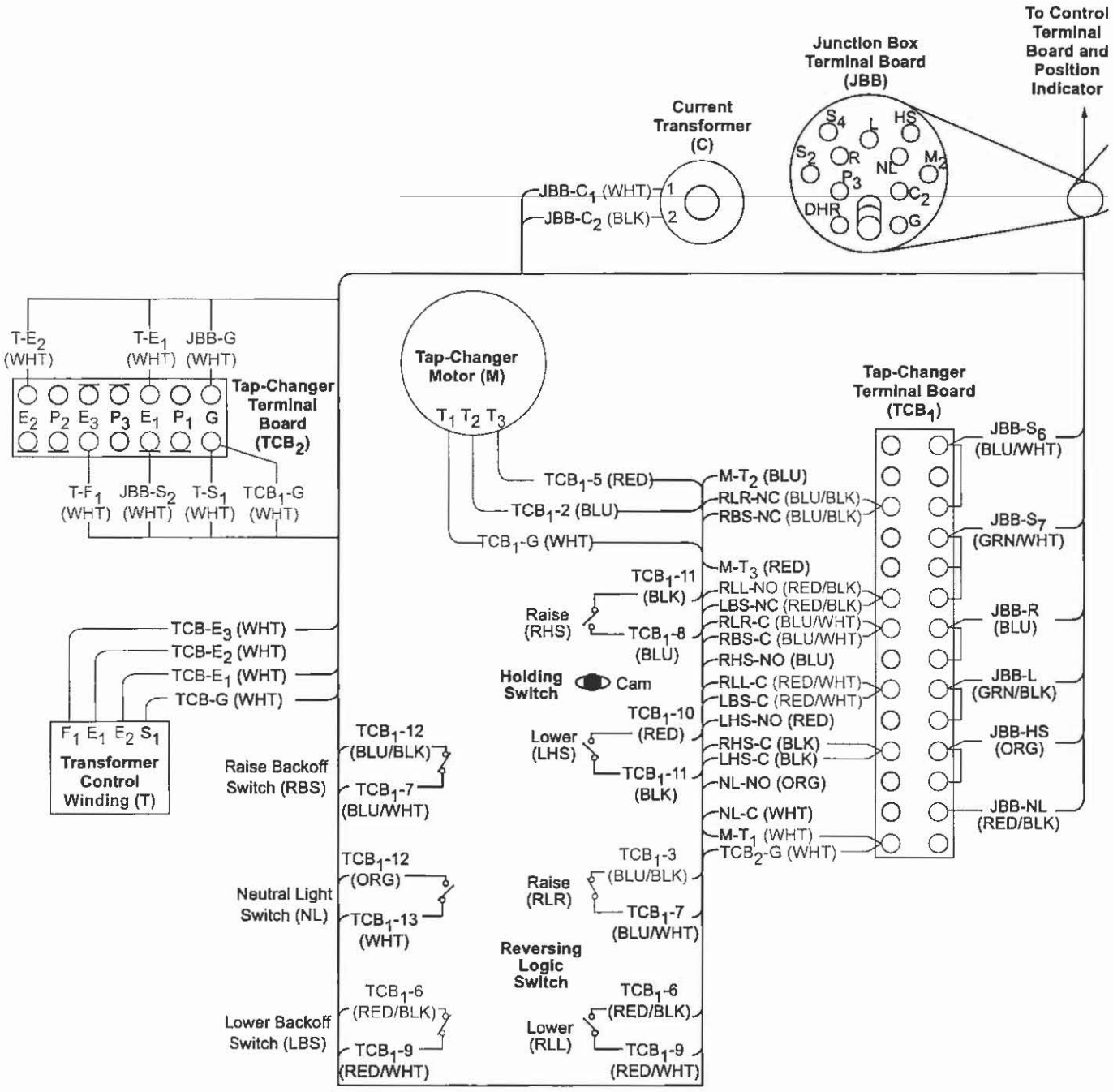

Figure 10-3.
Typical internal wiring of regulator with Quik-Drive tap-changer.

JBB-G – White
JBB-HS – Orange
RLS-1 – Blue
LLS-1 – Green/Black
JBB-NL – Red/Black
JBB-DHR – Orange/Black
JBB-S_6 – Blue/Black
JBB-S_7 – Black/ White
JBB-S_4 – White /Black
JBB-S_2 – Black
JBB-C_1 – Red
JBB-C_2 – Green

TB_1-G – White
TB_2-HS – Orange
TB_2-R_3 – Blue
TB_8-1 – Blue
TB_2-L_3 – White /Green
TB_8-3 – White /Green
TB_2-NL – White /Red
TB_2-DHR – White /Orange
TB_2-VS – Black
RCT_1-120 – Black
TB_1-G – White
RCT_2-G – White
SD_1-2 – Violet
TB_2-C_3 – Green
RCT_2 – White /Brown
RCT_1 – Black
TB_2-C_1 – Red

PD_2-2 – White /Brown
TB_2-V_7 – White /Brown
RCT_1-G – White
TB_1-G – White
PD_1-2 – Black
TB_1-V_4 – Black
RCT_2-G – White
TB_8-4 – White

TB_1-R_1 – Blue
TB_1-L_1 – White /Green
TB_2-G – White
RCT_1-G – White
TB_2-BR – White /Blue

TB_2-G – White
RCT_2-120 – White /Brown
TB_8-5 – White /Blue
TB_8-4 – White
TB_2-J – White
TB_1-VS – Black
SD_1-3 – Red
TB_1-C_3 – Green
TB_1-HS – Orange
TB_1-R_1 – Blue
TB_1-L_1 – White /Green
TB_1-NL – White /Red
TB_1-DHR – White /Orange

Note: TB_2-V_7 to TB_2-V_s jumper only applies to non-reverse power flow back panel assemblies supplied without RCT_2.

TB_2-V_7 is connected to RCT_2-120 on back panel assemblies set up for reverse power flow supplied with RCT_2.

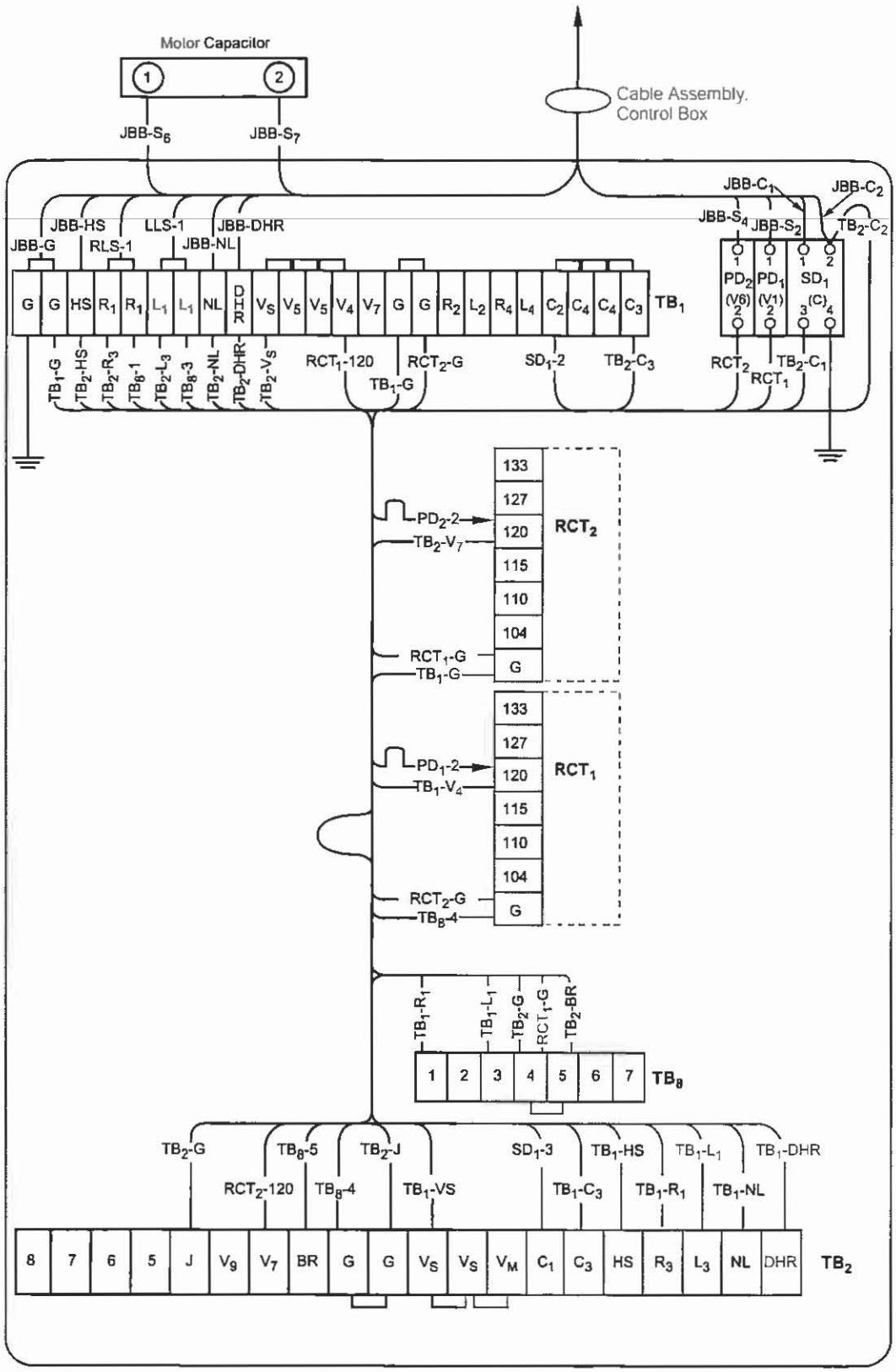

Figure 10-4.
Back panel signal circuit.

©2004 Cooper Power Systems, Inc.
ADD-AMP™, Metering-PLUS™, PMT™, Quik-Drive™, Quik-Start™, SOFT-ADD-AMP™, and TIME-ON-TAP™ are trademarks of Cooper Industries, Inc.
SanDisk® and CompactFlash® are registered trademarks of SanDisk Corporation Inc. in the United States and/or other countries.
IEEE Standard C37.90.1-2002™, IEEE Standard C37.90.2-1995™, IEEE Standard C57.13-1993™, IEEE Standard C57.15-1999™, IEEE Standard C57.91-1995™, and IEEE Standard C57.131-1995™ are trademarks of the Institute of Electrical and Electronics Engineers, Inc.
Microsoft® Windows® 95, Windows NT® and Windows® XP either registered trademarks or trademarks of Microsoft Corporation in the United States and/or other countries.

COOPER Power Systems

1045 Hickory Street
Pewaukee, WI 53072
www.cooperpower.com

DL
704

Voltage Regulators

COOPER
Cooper Power Systems

McGraw-Edison® Voltage Regulator Control Replacement Assembly (CRA) Installation Instructions and Service Information

Service Information

S225-40-1

Contents

Definition of Alerts 1-1
Introduction 1-1
CRA Applications 1-1
Before Getting Started 1-2
CRA Components 1-2
Equipment Required 1-3
S225-40-1 Installation Sections 1-3
Siemens Installations 2-1
General Electric (GE) Installations 3-1
Cooper Power Systems Installations 4-1
Control Setup
  Ratio Correction 5-1
  Control Setup 5-2
  Operational Check 5-3
Control Voltage Calibration (CL4C/5A) 5-4
Before Closing the CRA Door 5-5

Definition of Alerts

Please read the following carefully and heed the Warnings, Cautions and Notices herein.

⚠ WARNING
A WARNING describes a potentially hazardous situation which, if not avoided, could result in death or serious injury.

⚠ CAUTION
A CAUTION describes a potentially hazardous situation which, if not avoided, could result in minor or moderate injury.

NOTICE
A NOTICE describes a situation which, if not avoided, could result in damage to the equipment with no liklihood of personal injury.

Introduction

The McGraw-Edison Voltage Regulator Control Replacement Assembly (CRA) is designed to be used on single-phase regulators manufactured by *Siemens and General Electric, as well as Cooper Power Systems' McGraw-Edison type VR32 voltage regulators. The CRA utilizes the control signals common to all regulators, and incorporates special circuitry on non-Cooper Power Systems regulators to allow the proper interface between Cooper Power Systems' CL series of regulator controls and these regulators.

NOTICE
It is essential that the installer read this document in its entirety prior to the installation of the Control Replacement Assembly.
Review of this material prior to installation will help assure trouble-free installation.

This document has been prepared as a reference for the installation and operation of the CRA. If answers to specific questions cannot be found in this document, contact your Cooper Power Systems Representative for assistance.

CRA Applications

The CRA was designed for use on GE and Siemens single-phase voltage regulators that utilize the following circuits:

- Control voltage or **Load Side** voltage signal
- Motor raise and lower circuits
- Operations counter
- Common or ground
- CT current signal (optional)
- Source Side voltage signal (optional)
- Neutral light (optional)
- Drag hand reset (optional)

All of the signals listed are necessary for proper operation of the CRA unless otherwise noted as optional.

* Siemens and Siemens Energy and Automation are registered trademarks of Siemens-Aktiengesellschaft, Germany

Refer to these instructions for the definitions of warning and caution alerts. These instructions do not claim to cover all details or variations in the equipment, procedure, or process described, nor to provide directions for meeting every possible contingency during installation or maintenance. When additional information is desired to satisfy a problem not covered sufficiently for the users purpose, please contact your Cooper Power Systems Representative.

Before Getting Started

Before starting the CRA installation process, it is recommended that the installer know the following:

a. What manufacturer's regulator will this assembly be applied to?
b. What control settings are required?
c. Knowledge of the CL control setup procedures.
d. Will the assembly will be added in the field or in the shop?
e. Ratio correction requirements, if needed.

All of the questions above can be answered by a qualified individual trained in the proper installation and servicing techniques of single-phase voltage regulators and related equipment. Proper operation of the CRA is dependent on the correct installation and setup of the assembly. The instructions given in this document are specifically for those individuals with a working knowledge of installation and service techniques of this equipment. If there are any questions encountered during the installation process as outlined in this document, contact your Cooper Power Systems Representative for assistance.

It is recommended that the regulator be tested for normal operation with the existing control panel to verify proper operation of the tap changer mechanism prior to starting the change-out procedure.

CRA Components

The following is a list of the CRA components.

Figure 1;
- Long control box
- Universal Mounting bracket and associated hardware (items 016 through 020)

Figure 2;
- Backpanel with associated wiring (item 1) and DDR circuit board mounted in long control box
- CL series control frontpanel (unless box only ordered)
- Regulator Installation and Operating Instructions (example; S225-10-4C, S225-10-10)
- CRA Installation and Service document - S225-40-1

Figure 3;
- Universal terminal designation strip. This strip is the termination point for all regulators and is coded accordingly for all units. Use this figure for the installation procedures in subsequent chapters.

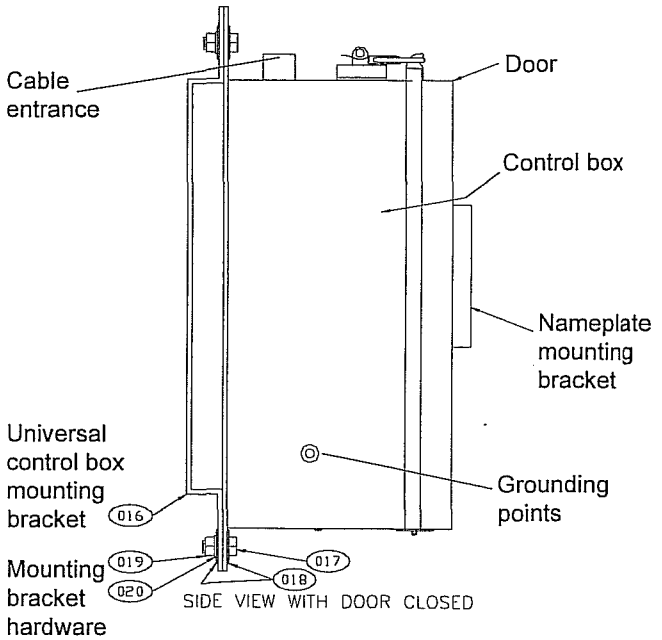

Figure 1. CRA external view

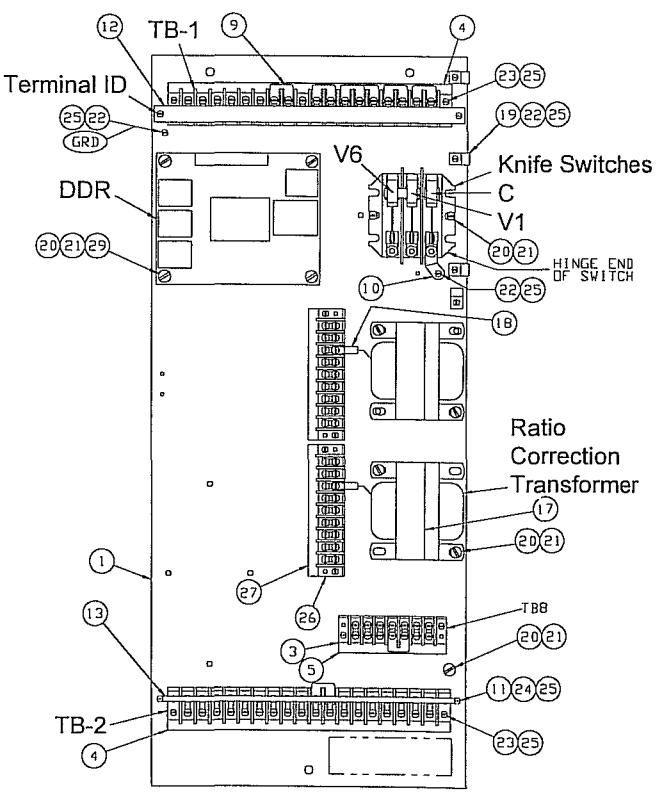

Figure 2. Backpanel, located inside box assembly

SIEMENS	E	J	K	U10	U11	U12		CPS		SOURCE	E	SOURCE	REG. SOURCE		REG. LOAD		CT HIGH		CAUTION:
G.E.	10	27	28	30	29	31		UNIT ONLY		CONN.	26 OR 10	CONN.	FROM RCT 2		FROM RCT 1		FOR ACCESSORY		DO NOT OPEN
CPS	G	RAISE	LOWER	OPCNTR	DHR	NEUT. LT		HS		#2	G	#1	VRCT 2	V5	VRCT 1	V4	C2	C3	CT CIRCUIT UNDER LOAD

Figure 3. Universal terminal strip

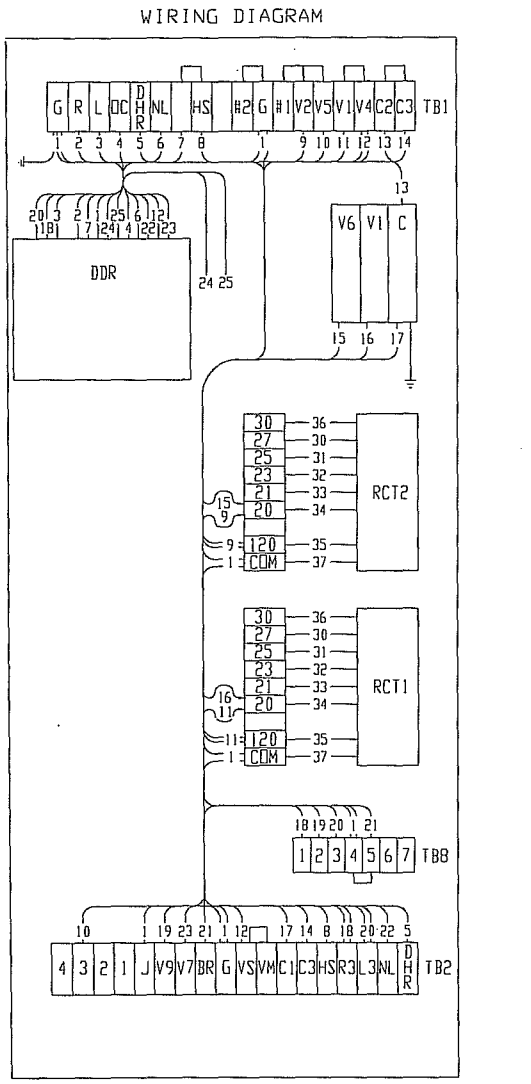

Figure 3. CRA Wiring Diagram with wire color codes

Verify that all components are included in your assembly upon receipt. If any component listed above is missing, contact your Cooper Power Systems Representative immediately.

Equipment Required

The following is a list of equipment recommended for installation. Most installations will not require use of all of the items listed, however it is advisable to have these items on hand in the event they are required.

- Long shank (9") screw holding screwdriver
- Long shank (9") standard screwdriver
- Socket set (including 1/2" and 3/4" sockets)
- 5/16" hex nut driver
- Standard lineman pliers or wire cutter/stripper
- Adjustable wrench
- Slip joint pliers
- Multimeter
- Electricians Tape
- TieWraps (9")
- Cable insulation cleaner
- Cleaning rag

S225-40-1 Installation Sections

This document has four "Installation Sections" describing the procedures for placing the Cooper Power Systems CRA on a Siemens, General Electric and Cooper Power Systems (McGraw-Edison) single-phase voltage regulator.

Section II, page 2-1, Siemens applications

Section III, page 3-1, General Electric applications

Section IV, page 4-1, Cooper Power Systems (McGraw-Edison) applications.

Section V, starting on page 5-1, reviews control setup, including ratio correction procedures, control calibration and operational testing.

Note: Although the CRA can be utilized on a Cooper Power Systems (McGraw-Edison) regulator, Cooper Power Systems recommends utilizing a standard control assembly for replacing or upgrading a Cooper Power Systems (McGraw-Edison) control since this is in the best economical interest of the customer. A standard control replacement assembly is available to the customer at less cost than the CRA. Contact your Cooper Power Systems Representative for pricing information.

SECTION II
SIEMENS APPLICATIONS

Replacement Procedure

The replacement procedure may be performed in the shop environment or the field. To facilitate field installation, the regulator must be *bypassed*. Bypassing is required for safety considerations, as the replacement procedure includes opening the CT circuit.

> **⚠ CAUTION — Field Installation Requires Bypassing The Regulator**
>
> Installation of the CRA in the field requires openingthe CT circuit. Opening the CT circuit under load will produce high voltages in the control box and a hazard to Operations personnel. Always bypass the regulator when installing the CRA in the field to prevent opening the CT circuit while the regulator is under load.

Note: The control cable may be an actual cable or a flexible conduit. For purposes of instruction, it will be referred to as "control cable".

1. After bypassing the regulator, open the existing control box and swing out the control front-panel.

2. Remove the frontpanel by disconnecting the jack plug and lifting the control off of its hinges.

3. If the incoming control cable leads are not marked or color coded, place appropriate wire markers on the control cable leads or mark to reference later.

4. Disconnect the incoming control cable leads from the female jack plug located on the back of the control box. If the tap changer motor capacitor is located in the control box, disconnect the leads from the capacitor and remove the capacitor for reinstallation in the Cooper box.

5. Remove the incoming control cable retaining nut and remove the cable from the control box. **If the regulator is fitted with a nonflexible conduit housing the control leads, it will be necessary to modify or replace this conduit with a flexible conduit to allow interface to the Cooper Power Systems box.** Remove the cable compression connector (cable grip) from the control box. RETAIN ALL PARTS AND HARDWARE.

6. **Remove the nameplate from the old control box assembly and retain with the hardware.** With the adjustable wrench (or appropriate socket wrench) remove AND RETAIN the bolts holding the control box on the regulator.
Remove the old control box assembly from the regulator.

7. Place the Cooper Power Systems supplied universal bracket (p.1-2, Figure 1, item 016) over the mounting bosses of the regulator and secure with bolts from the existing regulator.

8. Place the CRA control box on the universal bracket and secure it to the regulator with bolt, washer, lock-washer and nut provided (Figure 1, page 1-2, items 017 through 020). **Reattach the nameplate to the front of the the CRA control box.**

9. Ground the control cabinet via the ground boss located on the side of the cabinet.

> **⚠ CAUTION — Solidly Ground Control Box**
>
> The control cabinet must be solidly grounded to the regulator. Failure to provide a solid ground connection may cause a potential difference between the control box and the regulator which could result in circulating currents hazardous to operating personnel and the control.

10. Examine the control cable. Allow approximately 12" of lead length to protrude past the end of the conduit. This will facilitate connection to the top terminal strip and knife switches located in the box.

11. Remove the 1" pipe plug from the cable entrance flange located in the top of the CRA

control box. Insert the regulator control cable through the cable compression connector (cable grip) into the flange, tighten securely.

When turning the cable into the CRA cable flange, be certain to turn the leads inside the control box to keep from twisting together.

Wiring Siemens

12. **If there is NO source side control signal: Verify the lack of a source side or auxilliary voltage control signal ("U"**

Figure 4. Siemens Wiring Installation

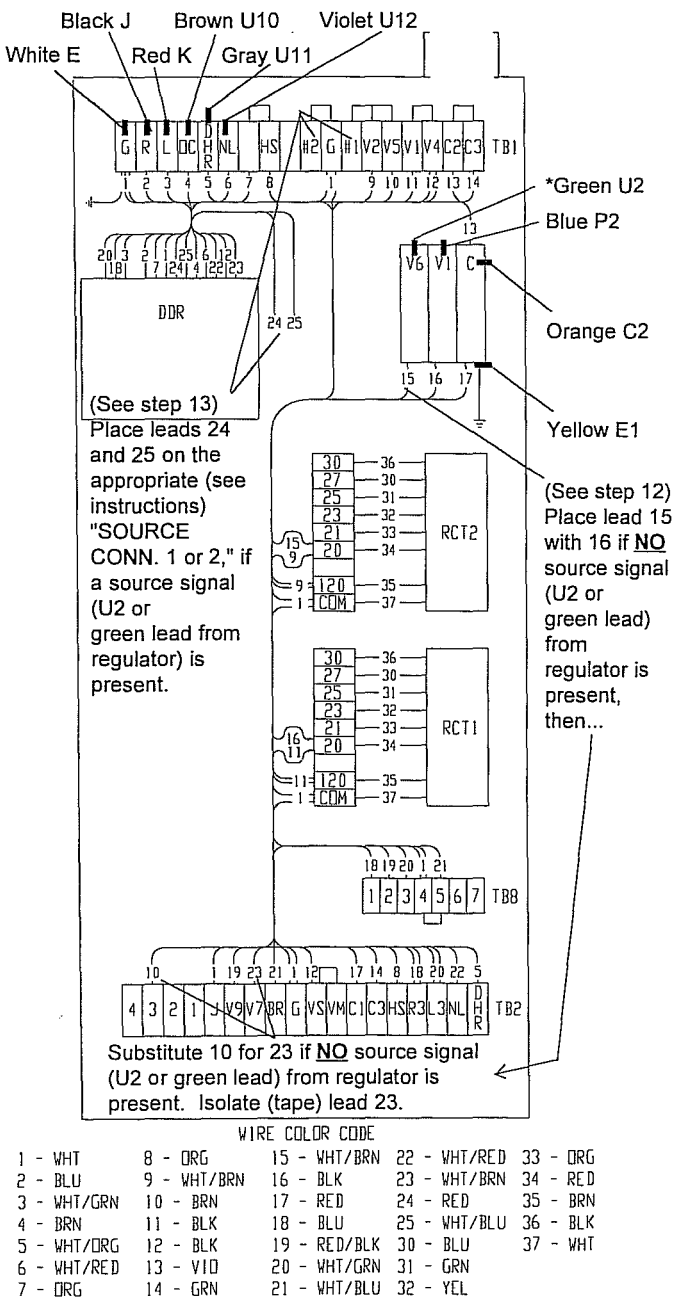

WIRE COLOR CODE

1 - WHT	8 - ORG	15 - WHT/BRN	22 - WHT/RED	33 - ORG
2 - BLU	9 - WHT/BRN	16 - BLK	23 - WHT/BRN	34 - RED
3 - WHT/GRN	10 - BRN	17 - RED	24 - RED	35 - BRN
4 - BRN	11 - BLK	18 - BLU	25 - WHT/BLU	36 - BLK
5 - WHT/ORG	12 - BLK	19 - RED/BLK	30 - BLU	37 - WHT
6 - WHT/RED	13 - VIO	20 - WHT/GRN	31 - GRN	
7 - ORG	14 - GRN	21 - WHT/BLU	32 - YEL	

winding) by examining the Siemens nameplate.
*A green lead for source side control signal may be present, but have no signal on it. Connect the control leads as shown in figure 4. In the case of no source or auxilliary winding, no connection of the "free hanging" RED (#24) and WHITE/BLUE (#25) leads from the DDR board is necessary.

Proceed to make the following connections:

a. connect the white/brown lead (fig.4 #15) located on the bottom of V6 knife switch **TO** the bottom of the V1 knife switch **AND**

b. substitute lead #10 (brwn) for #23 (wh/brwn) (located at points "3" and "V7" respectively on the bottom terminal strip, TB-2). Isolate lead #23 (wh/brwn) with electricians/insulated tape

13. **If a source side control signal is present:** if the regulator does have a source side voltage signal (a green lead and/or a lead marked U2), determine the polarity of the source signal relative to the load side signal by examining the polarity marks of the source and load windings as shown on the regulator nameplate.

If the source and control windings are in phase (typical) PLACE RED LEAD #24 IN FIGURE 4 ON THE TERMINAL IDENTIFIED AS "SOURCE CONNECTION 1" AND THE WHITE/BLUE LEAD #25 ON "SOURCE CONNECTION 2".

If the source and control windings are NOT in phase (not typical) PLACE RED LEAD #24 IN FIGURE 4 OF THE TERMINAL IDENTIFIED AS "SOURCE CONNECTION 2" AND THE WHITE/BLUE LEAD #25 ON "SOURCE CONNECTION 1", (opposite from previous instructions).

Complete the wiring of the control cable leads as shown in figure 4.

⚠ CAUTION

Incorrect polarity setup will cause high voltages on the DDR and control which will result in damage to these components. Be certain of polarity configuration before completing the installation wiring.

Control Replacement Assembly, CL series

⚠ CAUTION

The P2 and U2 control signals must never be connected to the same point. Internal damage to the regulator will occur if these two signals are shorted together.

14. If the previous regulator control had the tap changer motor capacitor located in the control box, relocate the capacitor on the Accessory Shelf Assembly, located in the upper portion of the CRA control box. Swing the Accessory Shelf Assembly out, and secure the capacitor to the shelf via tie-wraps or other fastening device (not included). Reconnect the capacitor leads to the capacitor and close the Accessory Shelf Assembly.

15. Verify that
    a. the DDR is plugged into the cable harness
    b. that V1 and V6 knife blades are open and
    c. that C knife blade is closed (shorted).

    Install the Cooper Power Systems control frontpanel if it is not in place already.

    Proceed to Section V of this manual for information on operational checks, control calibration and ratio correction.

SECTION III
GE APPLICATIONS

Replacement Procedure

The replacement procedure may be performed in the shop environment or the field. GE regulators incorporate a control cable disconnect device. The disconnect device has an internal CT short circuiting scheme that shorts the internal current transformer circuit when the control cable is disconnected. (See the GE regulator service guide for specific information.) If there is doubt as to whether or not the CT shorting device is functional, it is recommended that the regulator be bypassed to remove load current from the regulator which would render the CT circuit safe to open during installation of the CRA.

⚠ CAUTION — Field Installation Requires Short Circuiting the CT circuit

Installation of the CRA in the field requires openingthe CT circuit. Opening the CT circuit under load will produce high voltages and a hazard to Operations personnel. Disconnect the GE position indicator plug assembly from the regulator prior to working in the control box.

1. Disconnect the GE "position indicator plug assembly" from the bottom of the position indicator. This will short circuit the internal CT.
2. Open the existing control box and note the incoming control cable leads and associated color coding.
3. If the incoming control cable leads are not marked or color coded, place appropriate wire markers on the control cable leads or mark to reference later when reconnecting in the Cooper CRA box.
4. Disconnect the incoming control cable leads from the terminal strip(s) located on the back of the GE control box. If the tap changer motor capacitor is located in the control box, disconnect the leads from the capacitor and remove the capacitor for reinstallation in the Cooper box.
5. Remove the incoming control cable retaining nut and remove the cable from the control box. **If the regulator is fitted with a nonflexible conduit housing the control leads, it will be necessary to modify or replace this conduit with a flexible conduit to allow interface to the Cooper Power Systems box.**
6. **Remove the nameplate from the old control box assembly and retain with the hardware.** With the adjustable wrench (or appropriate socket wrench) remove AND RETAIN the bolts holding the control box on the regulator. Remove the old control box assembly from the regulator.
7. Place the Cooper Power Systems supplied universal bracket (p.1-2, Figure 1, item 016) over the mounting bosses of the regulator and secure with bolts from the existing regulator.
8. Place the CRA control box on the universal bracket and secure it to the regulator with bolt, washer, lock-washer and nut provided (Figure 1, page 1-2, items 017 through 020). **Reattach the GE nameplate to the front of the CRA control box.**
9. Ground the control cabinet via the ground boss located on the side of the cabinet.

⚠ CAUTION — Solidly Ground Control Box

The control cabinet must be solidly grounded to the regulator. Failure to provide a solid ground connection may cause a potential difference between the control box and the regulator which could result in circulating currents hazardous to Operating personnel and the control.

10. Allow approximately 12" of lead length to protrude past the end of the GE cable insulation and/or the threaded cable compression fitting. This will facilitate connection to the top terminal strip and knife switches located in the CRA box.
11. Remove the 1" pipe plug from the cable entrance flange located in the top of the CRA control box. Insert the GE control cable through this opening and tighten the threaded cable compression fitting into the cable entrance flange securely.

Control Replacement Assembly, CL series

Wiring GE

12. **If there is NO source side control signal: Verify the lack of a source side voltage control signal by examining the GE nameplate.**
Connect the control leads as shown in figure 5.

Figure 5. GE Wiring Installation

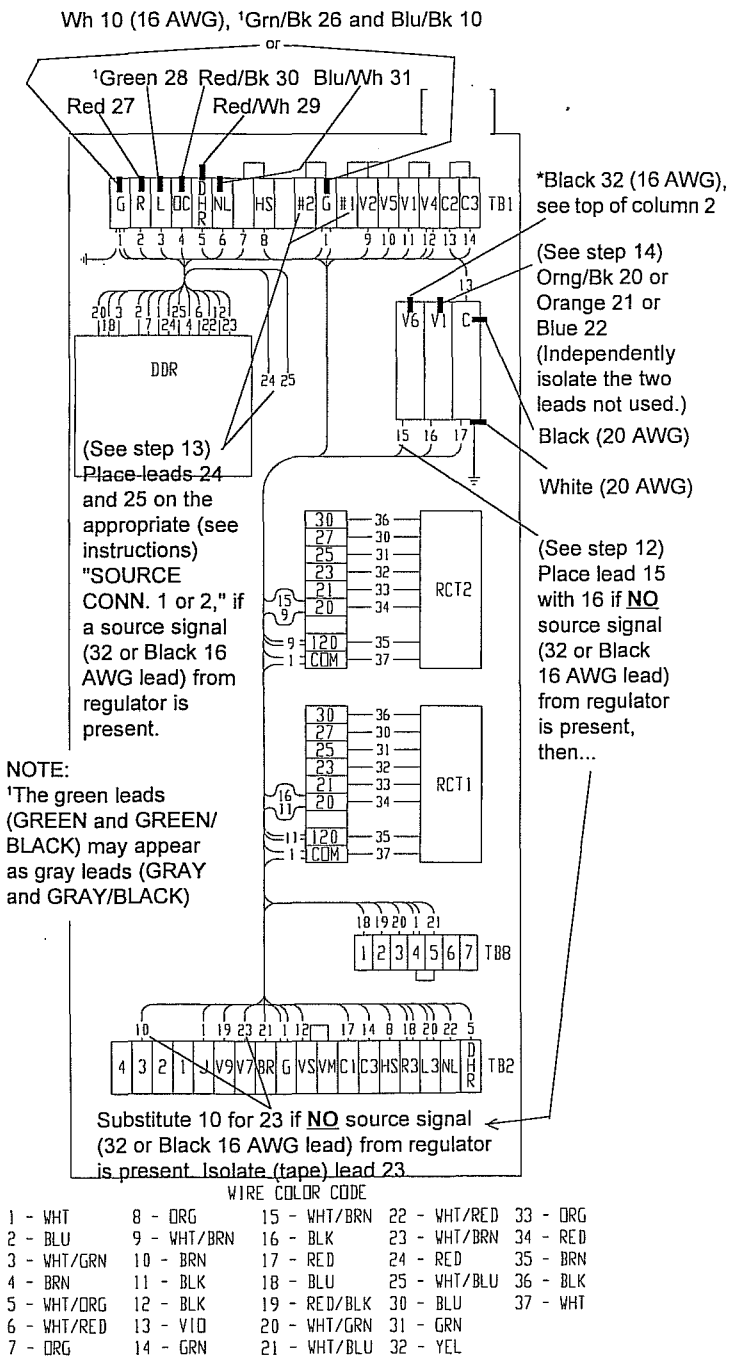

*A black (32) 16AWG lead used for source side control signal may be present; however, there will be no signal on it. In this case, no connection of the CRA "free hanging" RED (#24) and WHITE/BLUE (#25) leads from the DDR board is necessary. Tape the leads.

Proceed to make the following connections:

a. connect the white/brown lead (fig.5 #15) located on the bottom of V6 knife switch **TO** the bottom of the V1 knife switch **AND**

b. substitute lead #10 (brwn) for #23 (wh/brwn) (located at points "3" and "V7" respectively on the bottom terminal strip, TB-2). Isolate lead #23 (wh/brwn) with electricians/insulated tape.

13. **If there is a source side control signal:** connect the control leads as shown in figure 5. If the regulator does have a source side voltage signal (a black, 16 AWG lead and/or a lead marked 32), determine the polarity of the source signal relative to the load side signal by examining the polarity marks of the source and load windings as shown on the regulator nameplate.

If the source and control windings are in phase (typical) PLACE RED LEAD #24 IN FIGURE 5 ON THE TERMINAL IDENTIFIED AS "SOURCE CONNECTION 1" AND THE WHITE/BLUE LEAD #25 ON "SOURCE CONNECTION 2".

If the source and control windings are NOT in phase (not typical) PLACE RED LEAD #24 IN FIGURE 5 OF THE TERMINAL IDENTIFIED AS "SOURCE CONNECTION 2" AND THE WHITE/BLUE LEAD #25 ON "SOURCE CONNECTION 1", (opposite from previous instructions).

⚠ CAUTION

Incorrect polarity setup will cause high voltages on the DDR and control which will result in damage to these components. Be certain of polarity configuration before completing the installation wiring.

> **⚠ CAUTION**
>
> The Source and Load control signals must never be connected to the same point. Internal damage to the regulator may occur if these two signals are shorted together.

13.(continued)
Verify that ALL incoming lead connections and backpanel reconnections (as required) are completed by checking the field connections against figure 5.

14. Determine which load-side control signal wire is to be utilized (connected to the top of the V1 knife switch) by examining the nameplate. There are three wires that carry the load-side control signal. The wires are marked #20 (Orange/Black), #21 (Orange) and #22 (Blue). The wire that corresponds to the system voltage used as indicated on the nameplate should be terminated at the top of the V1 knife switch. *Independently* isolate (tape) the other two leads, i.e., **DO NOT** short them together.

15. If the previous regulator control had the tap changer motor capacitor located in the control box, re-locate the capacitor on the Accessory Shelf Assembly, located in the upper portion of the CRA control box. Swing the Accessory Shelf Assembly out, and secure the capacitor to the shelf via tie-wraps or other fastening device (not included). Reconnect the capacitor leads to the capacitor and close the Accessory Shelf Assembly.

16. Verify that
    a. the DDR is plugged into the cable harness
    b. that V1 and V6 knife blades are open and
    c. that C knife blade is closed (shorted)
    d. the two load signal leads NOT used (either GE incoming leads 20,21 or 22) are isolated (wire nut, electricians tape, etc.)

    Install the control frontpanel if it is not in place already.

17. Position the GE control cable so that the position indicator plug lines up with the position indicator receptacle. With the Cooper Power Systems control POWER switch in the OFF position, plug the position indicator plug into the receptacle.

Proceed to Section V of this manual for information on operational checks, control calibration and ratio correction.

SECTION IV
COOPER POWER SYSTEMS APPLICATIONS

The CRA can be placed on a McGraw-Edison voltage regulator by following the procedure given in this section. However, the CRA is designed to accommodate a Siemens or GE regulator and therefore *additional setup effort is required* to place the CRA on a McGraw-Edison voltage regulator. For this reason, as well as economical benefits, we recommend using the CRA on non-McGraw-Edison voltage regulators only, and using a *standard replacement control assembly* for McGraw-Edison voltage regulators. Standard replacement control assembly pricing and availability may be obtained by contacting your Cooper Power Systems Representative.

Replacement Procedure

The replacement procedure may be performed in the shop environment or the field. To facilitate field installation, the regulator must be bypassed. Bypassing is required for safety considerations, as the replacement procedure includes opening the CT circuit.

⚠ CAUTION — Field Installation Requires Bypassing The Regulator

Installation of the CRA in the field requires opening the CT circuit. Opening the CT circuit under load will produce high voltages in the control box and a hazard to Operations personnel. Always bypass the regulator when installing the CRA in the field to prevent opening the CT circuit while the regulator is under load.

1. Open the existing control box and swing out the existing control frontpanel.

2. Short the CT circuit using the appropriate method (C knife switch, etc.). Remove the existing frontpanel.

3. If the incoming control cable leads are not marked or color coded, place appropriate wire markers on the control cable leads or mark to reference later.

4. Disconnect the incoming control cable leads from the terminal strip(s) and/or knife switches located on the back of the control box.

5. Remove the incoming control cable retaining nut and remove the cable from the control box. Proceed to remove the cable compression connector (cable grip) from the control box and cable AND RETAIN these parts.

6. **Remove the nameplate from the old control box assembly and retain with the hardware.** With the adjustable wrench (or appropriate socket wrench) remove AND RETAIN the bolts holding the control box on the regulator.
Remove the old control box assembly from the regulator.

7. Remove the supplied universal bracket (p.1-2, Figure 1, item 016) from the CRA control box. In the majority of installations on older McGraw-Edison regulators, the universal bracket will not be required. In the event the CRA control box does not mount directly to the McGraw-Edison regulator, the universal bracket may be altered to accomodate hole and/or drill patterns.

8. Place the CRA control box on the McGraw-Edison regulator and secure it to the regulator with the appropriate hardware. **Reattach the nameplate to the front of the the CRA control box.** The nameplate bracket may be removed and the McGraw-Edison nameplate affixed directly to the CRA control box.

9. Ground the control cabinet via the ground boss located on the side of the cabinet.

⚠ CAUTION **Solidly Ground Control Box**

The control cabinet must be solidly grounded to the regulator. Failure to provide a solid ground connection may cause a potential difference between the control box and the regulator which could result in circulating currents hazardous to Operating personnel and the control.

Figure 6. McGraw-Edison Wiring Installation

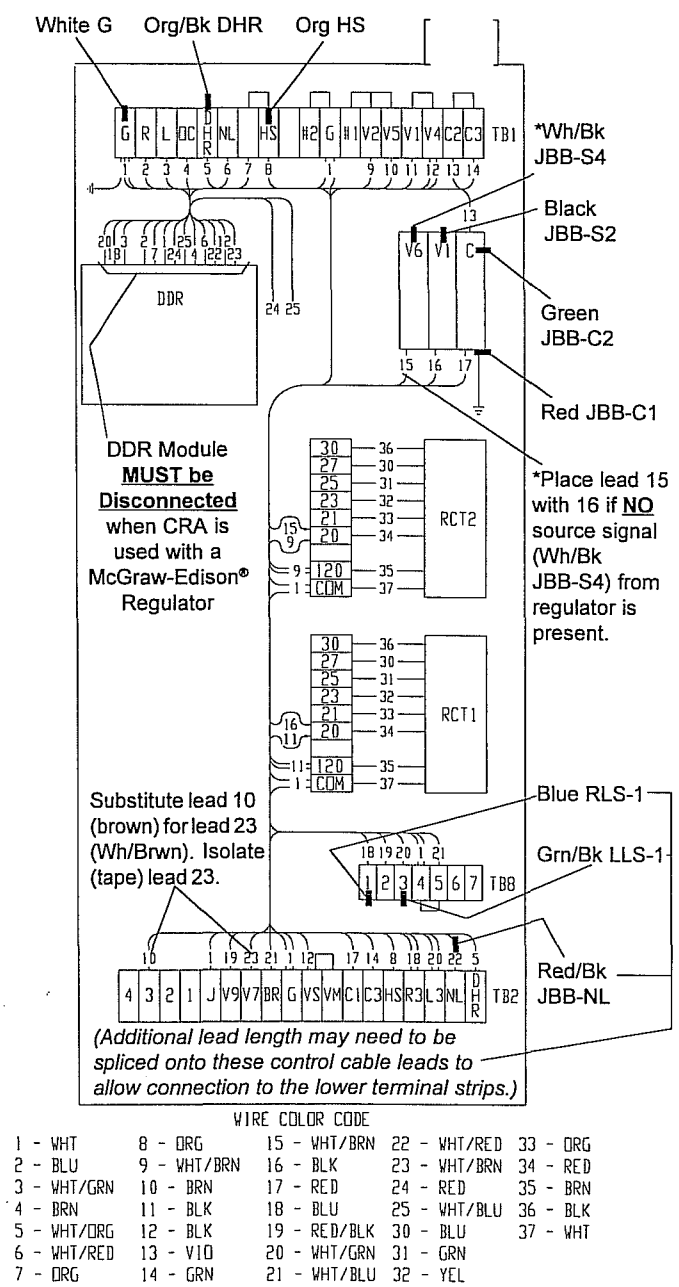

WIRE COLOR CODE

1 - WHT	8 - ORG	15 - WHT/BRN	22 - WHT/RED	33 - ORG
2 - BLU	9 - WHT/BRN	16 - BLK	23 - WHT/BRN	34 - RED
3 - WHT/GRN	10 - BRN	17 - RED	24 - RED	35 - BRN
4 - BRN	11 - BLK	18 - BLU	25 - WHT/BLU	36 - BLK
5 - WHT/ORG	12 - BLK	19 - RED/BLK	30 - BLU	37 - WHT
6 - WHT/RED	13 - VIO	20 - WHT/GRN	31 - GRN	
7 - ORG	14 - GRN	21 - WHT/BLU	32 - YEL	

Wiring McGraw Edison

10. Allow approximately 12" of lead length to protrude past the end of the cable insulation. This will facilitate connection to the upper terminal strip, lower terminal strips and knife switches located in the box. If there is insufficient lead length, it will be necessary to **splice** the appropriate additional lead length onto the incoming control cable.

11. Remove the 1" pipe plug from the cable entrance flange located in the top of the CRA control box. Insert the regulator control cable through, and the cable compression connector (cable grip) into the flange and tighten securely.

12. CAREFULLY disconnect the DDR harness plug from the DDR Module. When a CRA is utilized on Cooper Power Systems' McGraw-Edison voltage regulator, **the DDR module must be disconnected.**

13 substitute lead #10 (brwn) for #23 (wh/brwn) (located at points "3" and "V7" respectively on the bottom terminal strip, TB-2). Isolate lead #23 (wh/brwn) with electricians/insulated tape

14. **Examine Nameplate. If there is NO source side control signal (white/black JBB-S4 lead) perform the following:**
connect the white/brown lead (fig.6 #15), located on the bottom of V6 knife switch, to the bottom of the V1 knife switch.

15. **Examine Nameplate. If there is a source side DIFFERENTIAL control signal (a white/ black, lead identified as JBB-S4) perform the following:**
Place this lead on the top of the V6 knife switch. No movement of the V6 bottom lead is required.

If in doubt whether or not your McGraw-Edison regulator is equipped with a DIFFERENTIAL source winding, contact your Cooper Power Systems Representative with the CATALOG and SERIAL number from the regulator nameplate.

16. Verify that
a. the DDR is unplugged from the cable harness and taped with electricians tape,
b. the V1 and V6 knife blades are open and
c. the C knife blade is closed (shorted).
Install the control frontpanel if it is not in place.

Proceed to Section V of this manual.

SECTION V
CONTROL SETUP

Ratio Correction

It may be necessary to **"ratio correct"** the control voltages from the regulator. Ratio correction is a fine adjustment to either the load side voltage signal, the source side voltage signal or both. This adjustment involves getting the load and the source control signals to a 120 volt base. The magnitude of the voltage signal(s) coming to the control is dependant upon the system voltage applied to the regulator (such as 7200 volts) and the regulators internal potential transformer ratio (such as 60:1). The CRA is designed to work with a 120 volt signal from the load side of any regulator, a 120 volt signal from the source side of a Siemens or GE regulator and a DIFFERENTIAL source voltage signal from McGraw-Edison regulator.

NOTICE

The CRA is shipped from the factory set for NO ratio correction. Examine the regulator nameplate to determine if ratio correction is required in your application.

If the regulator nameplate indicates that the load and source control signals are something other than 120 volts, such as 115, 125, etc., it will be necessary to utilize the ratio correcting transformers (RCT) located on the backpanel of the CRA. (see figure 7)
Ratio correction is achieved by simply applying the load and/or the source control signals to the RCTs (auto-transformers) so that their output of 120 volts is what the control references. How much ratio correction is necessary is determined by the internal PT ratio which can be found by examining the regulator nameplate.

Procedure:

Source control signal (sometimes present)

If the regulator is supplied with a source side signal (Siemens green "U2"; GE #16AWG black 32; McGraw-Edison white/black JBB-S4) the appropriate lead will be terminated on the top of the V6 knife switch (fig. 8).

1. If the regulator nameplate identifies the source control signal as 120 volts for the system voltage used, no ratio correction is necessary for the source signal. Proceed to **Load control signal** section.

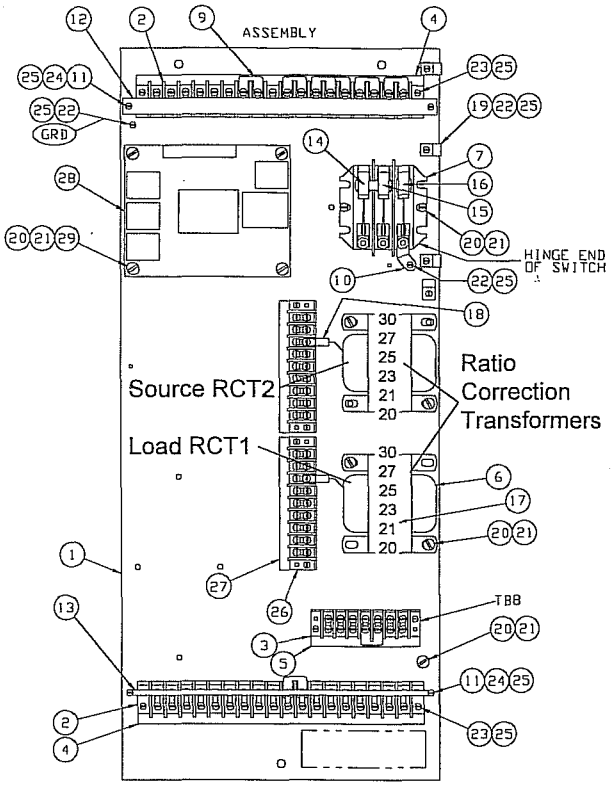

Figure 7. CRA backpanel showing RCTs

2. Example 1. If the regulator nameplate identifies the SOURCE control signal as a value less than 120 volts for the system voltage used, example 113 volts, set the ratio correction through RCT 2 by:

   a. calculate 113 - 120 = -7 volts
   b. obtain a -7 difference by placing lead # 15 (flanged spade terminal) on RCT2 - 20 and place lead # 9 (straight spade terminal) on RCT2 - 27. (20 - 27 = -7 volts).

   Example 2. If the regulator nameplate identifies the source control signal as a value more than 120 volts, for example 127 volts, set the ratio correction through RCT2 by:

   a. calculate 127 - 120 = +7 volts
   b. obtain a +7 difference by placing lead # 15 (flanged spade terminal) on RCT2 - 27 and place lead # 9 (straight spade terminal) on RCT2 - 20. (27 - 20 = +7 volts).

Load control signal (always present)

The regulator is supplied with a load side signal (Siemens blue "P2"; GE 20 org/bk or 21 orange or 22 blue; McGraw-Edison black JBB-S2). The appropriate

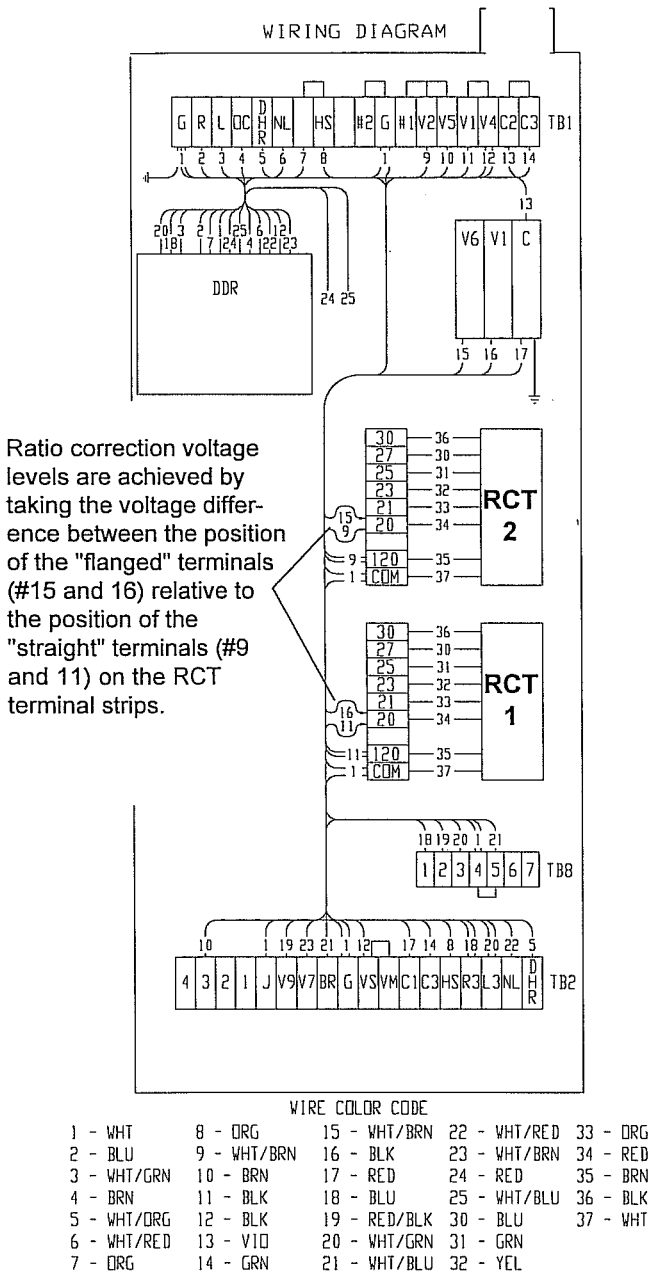

Figure 8. Ratio Correction Reference

lead will be terminated on the top of the V1 knife switch (fig. 8).

1. If the regulator nameplate identifies the load control signal as 120 volts for the system voltage used, no ratio correction is necessary for the source signal. Proceed to **Control Setup** section.

2. Example 1. If the regulator nameplate identifies the load control signal as a value than than 120 volts for the system voltage used, example 115 volts, set the ratio correction through RCT 1 by:
   a. calculate 115 - 120 = -5 volts
   b. obtain a -5 difference by placing lead # 16 (flanged spade terminal) on RCT1 - 20 and place lead # 11 (straight spade terminal) on RCT1 - 25. (20 - 25 = -5 volts).

   Example 2. If the regulator nameplate identifies the load control signal as for example 125 volts, set the ratio correction through RCT 1 by:
   a. calculate 125 - 120 = +5 volts
   b. obtain a +5 difference by placing lead # 16 (flanged spade terminal) on RCT1 - 25 and place lead # 11 (straight spade terminal) on RCT1 - 20. (25 - 20 = +5 volts).

Control Setup

Once the control is installed, complete the following.

If the regulator is in the field, perform the following:

1. All control switches in the off position. Remove the 6 Amp motor fuse from the frontpanel. With the regulator still in NEUTRAL, energize the regulator using the by-pass switch.

2. Close the CRA knife switches V1 and V6 and OPEN the C knife switch.

3. With the CONTROL FUNCTON switch in the OFF position, move the POWER switch to the INTERNAL position. This will energize the control.

If the regulator is in the shop perform the following:

1. All control switches in the off position. Place 120 volts to the EXTERNAL SOURCE terminals located on the control frontpanel. BE CERTAIN THE VOLTAGE POLARITY IS CORRECT WHEN APPLYING TO THE CONTROL. HIGH SIDE TO THE RED TERMINAL, NEUTRAL TO THE WHITE TERMINAL.

2. With the CONTROL FUNCTON switch in the OFF position, move the POWER switch to the EXTERNAL position. This will power-up the control.

Control Replacement Assembly, CL series

Once power is applied to the control, setup of the control can be accomplished. The setup of the CRA control frontpanel is covered in the Service literature that shipped with the CRA. The standard control sent with a CRA is the McGraw-Edison CL-4C control. If a CL-4C frontpanel is used, consult S225-10-4C, page 2-32 *"Setting the CL-4C Control For Service".*
If a CL-2A frontpanel is used with the CRA, consult S225-10-5, page 2-3, *"Setting the CL-2A Control For Service".* If a CL-5A frontpanel is used with the CRA, consult S225-10-10, page 1-4, *"Setting the CL-5A Control For Service".*
Once the control is set to its proper values, **a pre-installation check** (if regulator is in the shop environment) or an **operational check** (if regulator is in the field and on the line) should performed.

Operational Check

Once the controls are set to their proper values an Operational Check should be performed to *confirm correct function of the CRA.* The operational check can be performed on the regulator while in the shop (Pre-Installation Operational Check) or in the field (In-Service Operational Check). **To perform the In-Service Operation Check, the regulator must NOT be in the system circuit *and* bypassed.**

> ⚠ WARNING — Regulator Will Step Off of NEUTRAL when Performing Operational Check
>
> Stepping off of NEUTRAL **with the regulator in the system circuit and bypassed** will result in short circuiting the series winding. This will result in violent failure of the regulator and pose an injury hazard to Operation personnel.

The SOURCE and LOAD bushings of the regulator may be energized from the line through two disconnect switches (one for the SOURCE and one for the LOAD) or through one bypass type switch, i.e., McGraw-Edison Type B switch. The McGraw-Edison Type B switch isolates or opens the source and load bushing lines while bypassing the regulator with one hotstick operation. If a Type B switch is utilized, it will be necessary to use a "stinger", i.e., a conductor cable with hotstick operable line clamps, one end placed by hotstick on the source bushing of the regulator and the other end placed by hotstick on the energized line. This places line voltage on the source bushing only, and powers up the control through the regulator.

SITUATION A (no bypass switch present)
To power the control through the regulator, if the regulator-to-line wiring scheme uses a separate SOURCE and LOAD isolating disconnect switch, perform the following:

1. Verify regulator is in NEUTRAL.
2. Bypass the regulator.
3. Open the LOAD bushing disconnect as this will isolate the regulator from the system circuit.
4. Leave SOURCE bushing disconnect closed, as this will provide power to the control winding in the regulator.
5. Continue with FIELD Operational check.

SITUATION B (bypass switch utilized)
To power the control through the regulator if the regulator-to-line wiring scheme uses a bypass switch, perform the following:

1. Verify regulator is in NEUTRAL.
2. Bypass the regulator by opening the bypass switch.
3. Verify no potential between S and L bushings.
4. Clamp one end of "stinger" onto the SOURCE bushing/cable.
5. CAREFULLY clamp other end of "stinger" onto the energized line. This will provide power to the control winding in the regulator.
6. Continue with FIELD Operational check.

FIELD Operational check

1. Control POWER switch to INTERNAL.
2. CONTROL FUNCTION switch to MANUAL.
3. On the CL-4C press "0" on the keypad, i.e. Operation Counter.
4. While monitoring the operations counter, lower the regulator by pressing the LOWER control switch. The operations counter will increment and the regulator will lower one tap position. Lower the regulator until the LOW out of band indication is observed.
5. Place the AUTO/MANUAL switch into the AUTO mode. The regulator will time-out per the value entered at function code 3, then will tap up until back into band.

6. Return the regulator to NEUTRAL tap position by pressing the appropriate RAISE or LOWER control switch. The NEUTRAL LIGHT will illuminate.

7. Check the drag hand reset circuit by depressing the DRAG HAND RESET switch. The drag hands located in the position indicator will reset to the position indicator pointer position.

SHOP Operational check

The shop operational check is essentially identical to the field check except that it is performed in the shop using a 120 volt power supply instead of using line voltage through the regulator to power the control. With a properly functoning control panel, the high voltage bushings on the regulator will NOT be energized via a backfed control signal. However, it is recommended that the bushings be connected to ground as a safety precaution when performing any control panel powered testing.

It is necessary to maintain proper polarity when connecting 120 volts AC to the Cooper Power Systems frontpanel control. Incorrect polarity applied to the control could result in a shock hazard to Operating personnel as well as damage to the control and the users 120 volt source.

> ⚠ CAUTION **Maintain Correct Polarity to Frontpanel**
>
> Correct polarity must be maintained when applying 120 volts to the control frontpanel. Failure to do so will cause the users 120 volt line voltage being shorted to ground. This will result in a possible shock hazard to Operators and damage to the control and users power system.

With 120 volts applied to the external source terminals, perform the following:

1. Control POWER switch to EXTERNAL.

2. CONTROL FUNCTION switch to MANUAL.

3. When applicable, press "0" on the control keypad, i.e. Operation Counter.

4. While monitoring the operations counter, lower the regulator by pressing the LOWER control switch. The operations counter will increment and the regulator will lower one tap position.

5. While monitoring the operations counter, return the regulator to its original tap position by pressing the RAISE control switch.

6. Check the drag hand reset circuit by depressing the DRAG HAND RESET switch. The drag hands located in the position indicator will reset to the position indicator pointer position.

7. Check the neutral light circuit by manually raising or lowering the regulator to the NEUTRAL position. The NEUTRAL LIGHT will illuminate.

If any problems are encountered during the operational check, contact your Cooper Power Systems Representative for assistance.

Control Voltage Calibration (CL-4C/5A)

To assure that the CL-4C/5A is displaying accurate voltages, the control should be calibrated in the field once the regulator is back on line, in NEUTRAL with the CONTROL FUNCTION switch in the OFF position. Do this by:

1. Verify correct load and source (if available) ratio correction.

2. Place an RMS voltmeter at the terminals of the CL4C and read the voltage.

3. Activate level 3 security by entering 32123 at FC99.

4. Press FC 47 (voltage calibration). The voltmeter and the control display should read nearly identical or identical.
Correct for tolerance discrepancies *greater* than 0.4 volts by entering the voltage shown on the voltmeter at FC 47. Press "Change Reset" key followed by the value on the voltmeter, followed by the "Enter" key.

Before Closing the CRA Door

At this point, the CRA has passed its operational checks and is setup properly for operation on the system. Prior to completion of the replacement process, the following steps are recommended:

1. Verify all control settings, including switch positions.

2. Note the number of operations on the controls operations counter.

3. With a CL-4C or CL-5A control, perform a "DEMAND MASTER RESET" (FC 38). This will reset all of the demand values in the control.

4. If possible, obtain a Datareader. With a CL-4C or CL-5A control, perform a datareading. This will generate a report that can serve as a startpoint for control monitoring.

If you have questions regarding the control replacement process or troubleshooting the CRA after installation, contact your Cooper Power Systems Representative.

McGraw-Edison® is a registered trademark of Cooper Industries, Inc.
Printed in USA.

COOPER
Cooper Power Systems
2300 Badger Drive, Waukesha, WI 53188-5951

Voltage Regulators

COOPER Power Systems

Service Information

McGraw-Edison® Voltage Regulator Elevating Structure Assembly Instructions

S225-50-14

Each elevating structure is shipped on its own pallet as a self-contained unit. The pallet contains a part assembly kit as shown on Page 2. Check that all the parts are available before starting the assembly process. In order to complete the assembly, it is recommended to use a torque wrench or ratchet wrench with a socket for 11/16" across the flats of a standard hexagonal nut.

1. Place the top mounting platform on the ground, with smooth surface facing down, on wood runners to avoid scratching the galvanized zinc coating.

2. Place an upper leg in a vertical position on the inside corner of the platform (See Figure 1).

3. Insert a carriage bolt through the square holes in the platform and into the slotted hole on the leg. The round bolt head will be on the outside. Align the slot with the square hole until the shoulder on the carriage bolt goes through both parts (the leg and the platform). Insert a flange hex nut over the threaded end and tighten it until the parts stay together when released. Do not pull down tight.

4. Insert a second carriage bolt from the outside through the holes at 90º on the platform. Align holes so that the square shoulder goes through both parts. Place a nut over the threaded end and tighten as in step 3.

   Warning: It is important that the shoulder of the bolt goes through both the leg and the platform and that the angle legs are flat in contact (metal to metal) with the platform surface. There should be no air gap between parts.

5. **Secure the nuts tight to a torque of 20 to 25 ft-lb.** The holes on the platform and the legs are located so that the legs will be perpendicular to the platform surface after tightening.

6. Repeat steps 2 through 5 until all four upper legs are secured in place.

7. Select the desired height of the structure, referring to Table 2 or 3. The elevating structure can be adjusted from a minimum to a maximum range as shown.

8. Place a lower leg vertically, with anchor plate facing up, against the inside surface of the upper leg. Match the holes for desired stand height. Insert a carriage bolt with round head facing out through slot and square hole. Line up holes until the shoulder nests inside both parts (See Figure 2). Proceed as in steps 3 through 5 and repeat until all the lower legs have been secured in place.

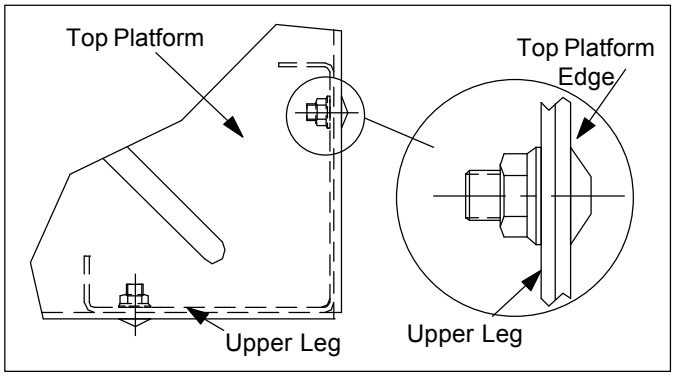

Figure 1.
Assembly of Upper Leg to Platform.

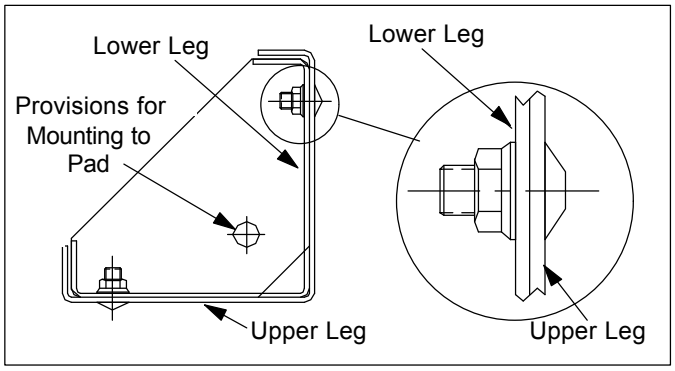

Figure 2.
Assembly of Lower Leg to Upper Leg.

9. The assembly is now completed.

10. Turn assembly upright onto mounting pad or non-yielding footing. It is recommended that the lower leg mounting plates be secured to the pad with four (4) 1/2" diameter bolts (not provided) in order to insure that the installation can withstand lateral wind and seismic loads. Refer to Table 1, Dimension "A" for reference mounting distance between bolts.

11. Lift the regulator onto the platform of the elevating structure. Secure the regulator to the center of the structure using four (4) 1/2" diameter bolts, flat washers, lock washers, and nuts. Tighten to 160-180 in-lb. Do not overtighten as the top mounting platform may deform.

WARNING: The maximum weight capacity for the elevating structure is 7400 pounds. Exceeding this rating may cause the structure to fail, resulting in possible permanent damage to the structure and/or the equipment placed on it and may result in personal injury or death.

These instructions do not claim to cover all details or variations in the equipment, procedure, or process described, nor to provide directions for meeting every possible contingency during installation or maintenance. When additional information is desired to satisfy a problem not covered sufficiently for the user's purpose, please contact your Cooper Power Systems Representative.

July 2002; supersedes May 2001
Printed in USA

McGraw-Edison® Voltage Regulator Elevating Structure Assembly Instructions

WARNING: The maximum weight capacity for the elevating structure is 7400 pounds. Exceeding this rating may cause the structure to fail, resulting in possible permanent damage to the structure and/or the equipment placed on it and may result in personal injury or death.

Kit Materials

Quantity	Size	Description
18*	7/16"-14 X 1	Carriage Bolts w/ Epoxy Patch
18*	7/16"-14	Flanged Hex Nuts
4	1/2"-13 X 5	Hex Bolts
8	1/2"	Flat Washers
4	1/2"-13	Hex Nuts
4	1/2"	Lock Washers
1		Top Platform
4		Upper Legs
4		Lower Legs (with Provisions for Anchoring to Pad)

* 16 Carriage bolts and hex lock nuts are required for assembly; 2 additional carriage bolts and hex lock nuts are included.

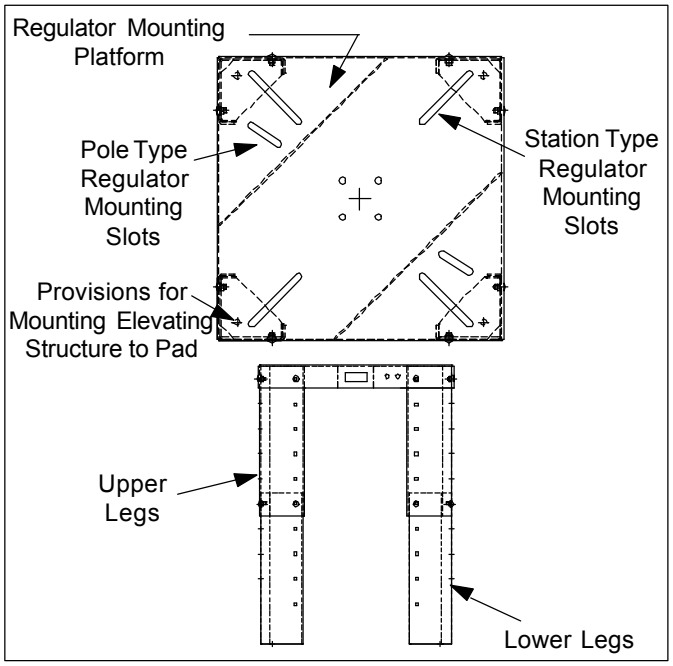

Figure 3.
Complete Assembly.

TABLE 1 Pad Mounting Hole Location

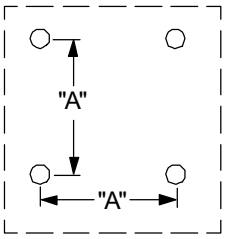

Elevating Structure	Dimension "A"	Platform Size	Regulator Tank Diameter	Table
Part Number 2042020B01	27.2 in.	31.50 in.	20-29 in.	2
Part Number 2042020B02	27.2 in.	31.50 in.	20-29 in.	3
Part Number 2042020B03	33.2 in.	37.50 in.	29-36 in.	3

TABLE 2 Height of 2042020B01

Height	Hole Position on Lower Leg	Bolt Position on Upper Leg
24.7	5	4
28.7	5	5
32.7	4	5
36.7	3	5
40.7	2	5
44.7	1	5

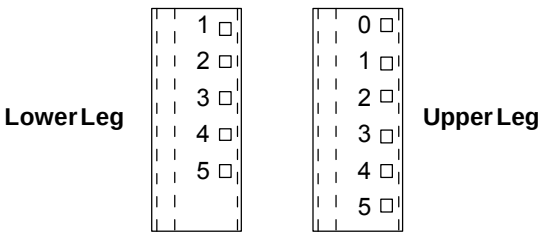

TABLE 3 Height of 2042020B02 & B03

Height	Hole Position on Lower Leg	Bolt Position on Upper Leg
16.4	3	2
20.4	2	2
24.4	1	2

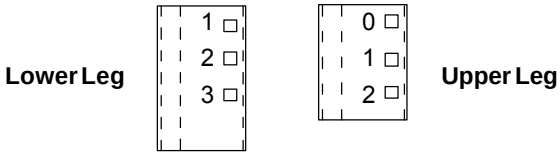

COOPER Power Systems

2300 Badger Drive
Waukesha, WI 53188-5951
http://www.cooperpower.com

© 2001 Cooper Industries, Inc.
McGraw-Edison® is a registered trademark of Cooper Industries, Inc.

COOPER Power Systems

Voltage Regulator

Service Information

CL-6A Control Retrofit Connector Kit Instructions S225-50-27

Contents

General 1
Instructions 1
Safety Information 2

GENERAL

Instructions for retrofiting voltge regulators received with CL2A with 18 position terminal strips, CL4C, and CL5 series controls with CL-6A series control panels.

INSTRUCTIONS

1. Remove the old front panel by disconnecting the fanning strip from TB_2. TB_2 is the bottom terminal strip at the bottom of the control back panel. See Figure 1.
2. Place, two item 2 terminal strip jumpers on to TB_2. One jumper between TB_2-4 and 3, and one jumper between TB_2-2 and 1. See Figure 1.
3. Using a standard screwdriver remove the screw fastening the cable fastener to the CL-6A control panel. See Figure 2.
4. Remove the cable fastener from the harness assembly.
5. Carefully pull upward on the ends of the control assembly connecter to disconnect from the CL-6A front panel. See Figure 3.
6. If the connecter becomes too difficult to remove without damaging the wiring connections, remove the back shield from the control panel using a $^3/_8$ inch nut driver to remove the four self-locking nuts. There are two self-locking nuts on both sides of the back of the front panel. See Figure 4.
7. Select item 1, wiring harness from the parts kit.
8. Connect the new wiring harness to the control connecter with the vaccant wire slot in the harness connecter located at the end of the connecter pin nearest the bottom of the control front panel. See Figure 2.
9. Press down on the connecter to fully engage both connecter bodies and pins. See Figure 2.
10. Place the cable fastener on to the new wiring harness.

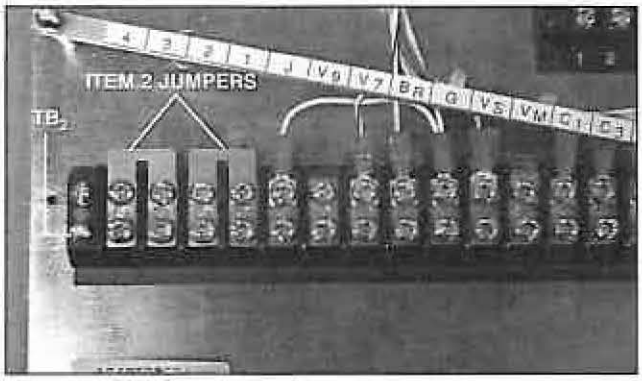

Figure 1.
TB_2, 18 position terminal board.

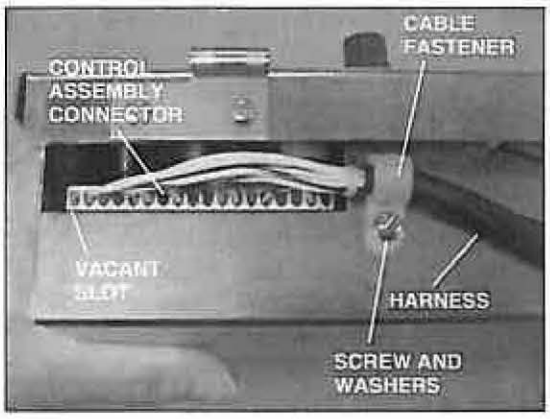

Figure 2.
CL-6A Harness assembly.

These instructions do not claim to cover all details or variations in the equipment, procedure, or process described, nor to provide directions for meeting every contingency during installation, operation, or maintenance. When additional information is desired to satisfy a problem not covered sufficiently for the user's purpose, please contact your Cooper Power Systems sales engineer.

SAFETY FOR LIFE

Cooper Power Systems products meet or exceed all applicable industry standards relating to product safety. We actively promote safe practices in the use and maintenance of our products through our service literature, instructional training programs, and the continuous efforts of all Cooper Power Systems employees involved in product design, manufacture, marketing and service.

We strongly urge that you always follow all locally approved safety procedures and safety instructions when working around high-voltage lines and equipment and support our "Safety For Life" mission.

SAFETY INFORMATION

The instructions in this manual are not intended as a substitute for proper training or adequate experience in the safe operation of the equipment described. Only competent technicians, who are familiar with this equipment should install, operate and service it.
A competent technician has these qualifications:

- *Is thoroughly familiar with these instructions.*
- *Is trained in industry-accepted high- and low-voltage safe operating practices and procedures.*
- *Is trained and authorized to energize, de-energize, clear, and ground power distribution equipment.*
- *Is trained in the care and use of protective equipment such as flash clothing, safety glasses, face shield, hard hat, rubber gloves, hotstick, etc.*

Following is important safety information. For safe installation and operation of this equipment, be sure to read and understand all cautions and warnings.

Hazard Statement Definitions

This manual may contain four types of hazard statements:

DANGER: Indicates an imminently hazardous situation which, if not avoided, will result in death or serious injury.

WARNING: Indicates a potentially hazardous situation which, if not avoided, could result in death or serious injury.

CAUTION: Indicates a potentially hazardous situation which, if not avoided, may result in minor or moderate injury.

CAUTION: Indicates a potentially hazardous situation which, if not avoided, may result in equipment damage only.

Safety Instructions

Following are general caution and warning statements that apply to this equipment. Additional statements, related to specific tasks and procedures, are located throughout the manual.

DANGER: Hazardous voltage. Contact with high voltage will cause death or severe personal injury. Follow all locally approved safety procedures when working around high- and low-voltage lines and equipment.

WARNING: Before installing, operating, maintaining, or testing this equipment, carefully read and understand the contents of this manual. Improper operation, handling or maintenance can result in death, severe personal injury, and equipment damage.

WARNING: This equipment is not intended to protect human life. Follow all locally approved procedures and safety practices when installing or operating this equipment. Failure to comply may result in death, severe personal injury and equipment damage.

WARNING: Power distribution equipment must be selected for the intended application. It must be installed and serviced by competent personnel who have been trained and understand proper safety procedures. These instructions are written for such personnel and are not a substitute for adequate training and experience in safety procedures. Failure to properly select, install or maintain this equipment can result in death, severe personal injury, and equipment damage.

11. Using the flat washer followed by the split lock washer and screw removed from the orginal cable fastener, fasten the wiring harness to the front panel. See Figure 2.
12. Place the front panel on to the hinges of the control box.
13. Connect the green ground wire on the front panel to the back panel using a standard screwdirver. See Figure 5
14. Place the fanning strip on to the bottom role of terminal board TB_2 screws. The right hand end of the fanning strip must have the white/orange wire on TB_2. The left end of the fanning strip must have a black wire. See Figure 6.
15. Tighten all 18 terminal screws on TB_2.

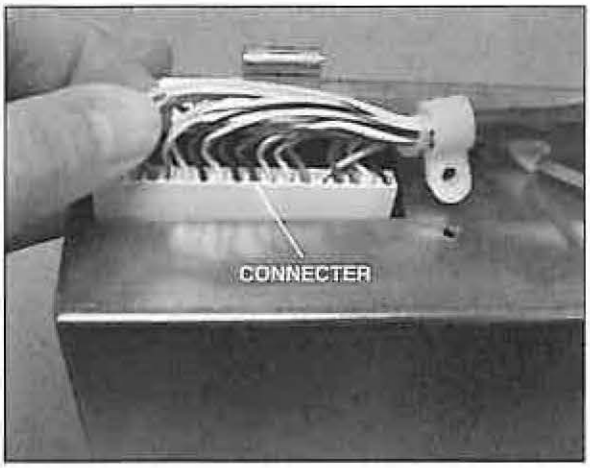

Figure 3.
CL-6A harness connecter.

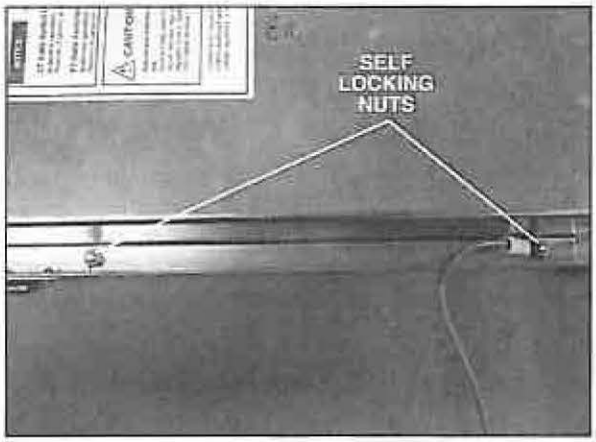

Figure 4.
Back Shield.

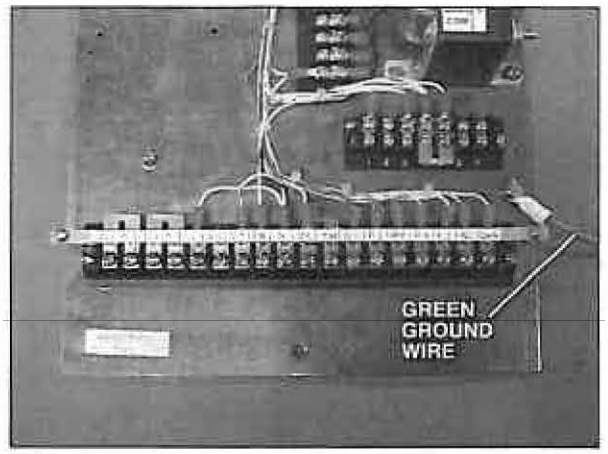

Figure 5.
Ground Connection.

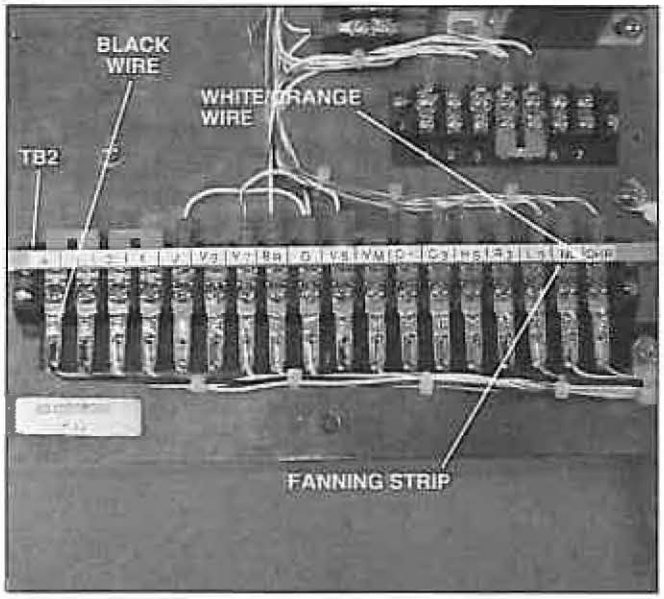

Figure 6.
Fanning Strip on TB_2.

TABLE 1
Supplied In Kit

Item	Description	Qty
1	Wiring Harness	1
2	Terminal Strip Jumpers	2
Tools Required:		
1	Standard Screwdriver	
1	Phillips Screwdriver	
1	3/8 Nut Driver	

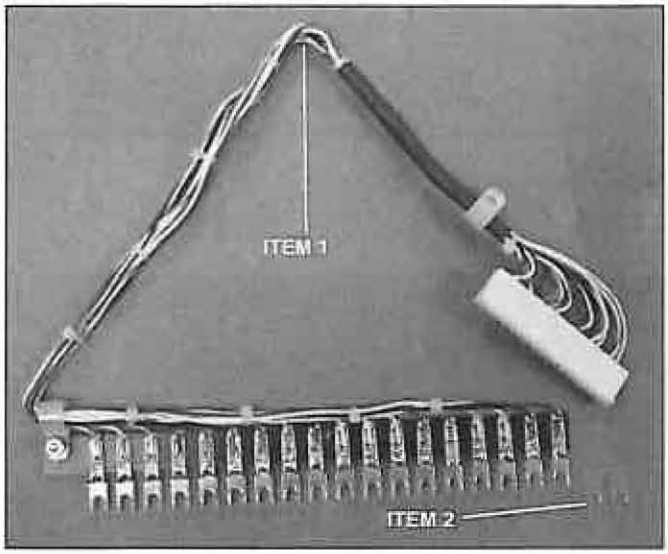

Figure 7.
Kit Parts.

© 2004 Cooper Industries, Inc
Rev. 00

COOPER Power Systems

1045 Hickory Street
Pewaukee, WI 53072 USA
www.cooperpower.com

REFERENCE
EXTERNAL APPLICATION OF A MOTOR START CAPACITOR ON VOLTAGE REGULATORS

Created by: B. Chubbs
Revised by: B. Chubbs
Reviewed by: G. Samms
Approved by: G. Samms

APPLICATION OF EXTERNAL MOTOR START CAPACITOR

In the event of failure of the internal motor start capacitor, the motor may be able to be operated by the application of an external capacitor in the control box. Refer to Cooper Power Systems reference manual R225-60-10 (See Next Page).

Note: This application is for a temporary fix only. An external capacitor in the control box should be used to return the unit to its neutral position so that it may be removed from service and repaired. As stated in reference manual R225-60-10, the externally mounted capacitor is located on the outer side of limit switches in the position indicator. As a result, if the unit is in 16L or 16R tap position (i.e. the limit switches are open) the capacitor will be disconnected from the motor and will not work.

Voltage Regulators

COOPER
Cooper Power Systems

External Application of a Motor Start Capacitor on a Single Phase Voltage Regulator

Reference Information

R225-60-10

Introduction

A step voltage regulator utilizes a capacitor to start the motor of the tapchanger. A number of regulators operating in the field produced by Siemens®, General Electric® and Cooper Power Systems, McGraw Edison® have an internally mounted, under oil motor start capacitor. The motor start capacitor, if failed, will not allow the tapchanger to operate. In this situation, the motor may be able to be operated by proper application of a capacitor in the control box of the regulator.

Required Items

The procedure will require the following items.

1. Appropriately sized temporary capacitor.
If in doubt as to correct capacitor size, refer to applicable manufacturers literature. McGraw Edison® regulators utilize a 7.5 uF, 440 volt capacitor on spring drive model tapchangers and a 40 uF (minimal) 440 volt capacitor on direct drive tapchangers.

2. Temporary capacitor leads.
Leads should be connected to the temporary capacitor terminals and have terminals on the free lead end that can be attached to a control box terminal screw or wire. Alligator clips work well in most applications.

3. Screwdriver.
As needed to allow capacitor leads to be attached into the control circuit where screw terminals are present.

Procedure

⚠ CAUTION DE-ENERGIZE THE CONTROL!
Remove power from the control box to prevent accidental shock.

1. SHORT the raise and lower circuits.
Identify the raise and lower circuit coming into the control box from the regulator. The following are typical lead identifiers for the various manufacturers.

Siemens®	Raise = J	Lower = K
General Electric®	Raise = 27	Lower = 28
McGraw Edison®	Raise = R1	Lower = L1

Place a momentary short circuit across the raise and lower leads to discharge any residual capacitive voltage that may be in the motor circuit.

2. Connect temporary capacitor leads.
Connect the temporary capacitor leads ***across*** the raise and lower circuit lead wires. Reference figure 1.

A capacitor connected in this way electrically "replaces" the failed internal capacitor. Reference figure 2.

3. Operate the tapchanger.
Energize the control and run the regulator to neutral. Remove the regulator from service. Replace the capacitor (recommended)... OR install an external capacitor, located electrically between the position indicators mechanical limit switches (identified in Figure 2 as LLS and RLS) and the motor.

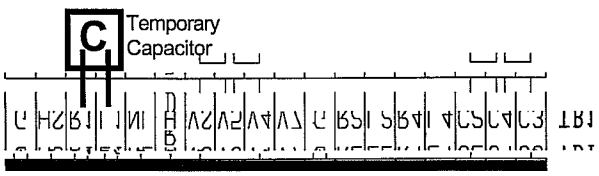

Figure 1.
Temporary capacitor connected on a McGraw Edison® regulator

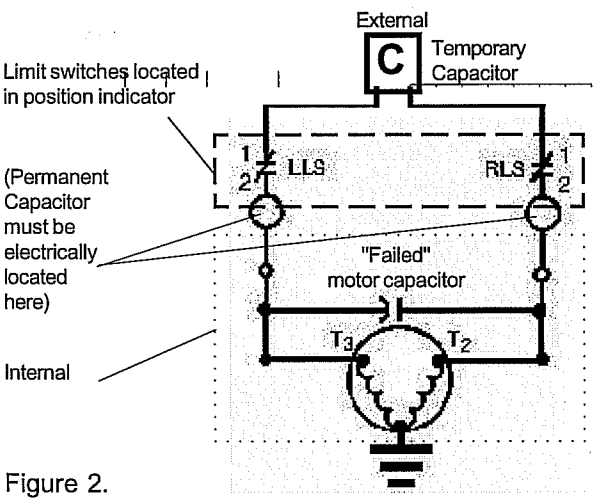

Figure 2.
Electrical representation of temporary capacitor in the motor circuit.

Limitations

The described procedure will work in cases where the limit switches located in the position indicator are closed. Closed switches provide the electrical path necessary for the capacitor to be across the raise and lower motor windings. **If either of the limit switches are open, the circuit is interrupted and the motor will not turn.** Limit switches are typically open at 16 raise or lower, or at whatever tap position they are set to open. *Any permanent placement of a capacitor must be electrically between the motor and the limit switches.*

Assistance

Call 414-896-2488 for further application assistance.

Megger®

User Manual

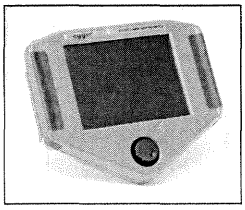

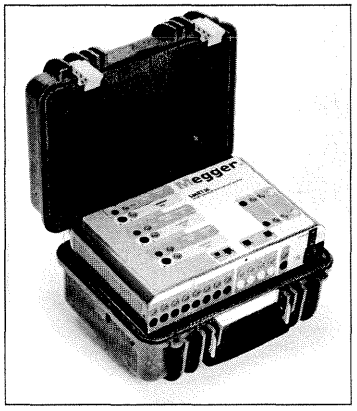

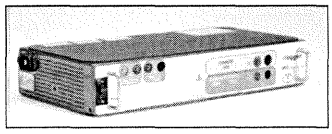

Model STVI
Smart Touch View Interface

Model SMRT1
Single Phase Relay Test System

Model SMRT36
Three Phase Relay Test System

Part 81757
Rev 3 Date 12/2011

Revision History

Revision	ECN #	Date
1	Initial Release	6/7/2011
2	31676	8/4/2011
3	31736	12/7/2011

IMPORTANT

This manual, as well as the hardware and software described in it, is furnished under license and may be used or copied only in accordance with the terms of such license. The content of this manual is furnished for informational use only, is subject to change without notice. Megger assumes no responsibility or liability for any errors or inaccuracies that may appear in this manual.

The information and data in this User Manual are proprietary. The equipment described herein may be protected by U.S. patents. Megger specifically reserves all rights to such proprietary information as well as rights under any patent, none of which is waived by the submission of this user manual.

Except as permitted by such license, no part of this publication may be reproduced, stored in a retrieval system, or transmitted, in any form or by any means, electronic, mechanical, recording, or otherwise, without the prior written permission of Megger.

Megger, the Megger logo are trademarks of Megger. All other trademarks are the property of their respective owners.

Notice to U.S. government end users. The hardware, software and documentation are "commercial items", as that term is defined at 48 C.F.R. §2.101, consisting of "commercial computer software" and "commercial computer software documentation," as such terms are used in 48 C.F.R. §12.212 or 48 C.F.R. §227.7202, as applicable. Consistent with 48 C.F.R. §12.212 or 48 C.F.R. §§227.7202-1 through 227.7202-4, as applicable, the commercial computer software and commercial computer software documentation are being licensed to U.S. government end users (1) only as commercial items and (2) with only those rights as are granted to all other end users pursuant to the terms and conditions set forth in the Megger standard commercial agreement for this software and hardware. Unpublished rights reserved under the copyright laws of the United States. The recipient, if a Government agency, acknowledges that this manual and the equipment described were procured with "Limited Rights" to technical data as described in ASPR 9-203 (b).

The STVI includes an RTOS-resident computer program. This program belongs to Megger and contains trade secret ideas and information of Megger.

Written and designed at Megger, 4271 Bronze Way, Dallas, Texas 75237.

Printed in the USA.
© 2011 Megger, all rights reserved.

SAFETY PRECAUTIONS

WARNING:
VOLTAGES GENERATED BY THIS INSTRUMENT CAN BE HAZARDOUS

This instrument has been designed for operator safety; however, no design can completely protect against incorrect use. Electrical circuits are dangerous and can be lethal when lack of caution and poor safety practices are used. There are several standard safety precautions that should be taken by the operator. Where applicable, IEC safety markings have been placed on the instrument to notify the operator to refer to the user manual for instructions on correct use or safety related topics. Refer to the following table of symbols and definitions.

Symbol	Description
	Direct Current
	Alternating Current
	Both direct and alternating current
	Earth (ground) Terminal. There is a common chassis ground terminal located on the front panel (see Front panel under Description of Controls.
	Protective Conductor Terminal
	Frame or Chassis Terminal
	On (Supply)
	Off (Supply)
	Caution, risk of electric shock
	Caution (refer to accompanying documents)

⚠ WARNING: Under no circumstances should the operator or technician attempt to open or service any Megger instrument while connected to a power source. Lethal voltages are present and may cause serious injury or death!

SAFETY PRECAUTIONS (Continued)

The following are some specific safety related items associated with the SMRT test system.

Read and understand all safety precautions and operation instructions before attempting to use this unit.

The purpose of this equipment is limited to use as described in this instruction manual. Should a situation arise that is not covered in the general or specific safety precaution please contact Megger regional representative or Megger, Dallas Texas.

Safety is the responsibility of the user. Misuse of this equipment can be extremely dangerous.

Always start with the power OFF, before connecting the power cord. Make sure outputs are off before attempting to make test connections.

Never connect the test set to energized equipment.

Always use properly insulated test leads. The optional test leads are rated for the continuous output ratings of the test system, and should be properly used and cared for. DO NOT use cracked or broken test leads.

Always turn the test system off before disconnecting the power cord.

DO NOT attempt to use the unit without a safety ground connected.

DO NOT attempt to use the unit if the power cord ground prong is broken or missing.

DO NOT use the test set in an explosive atmosphere.

The instrument must only be used by suitably trained and competent persons.

Observe all safety warnings marked on the equipment.

For safety related or other important topics, like the statement below, will be notated with the adjoined symbol. Read the topic carefully as it may relate either to the safe operation of the test system or the safety of the operator.

⚠ **Under no circumstances should the operator put their hand or tools inside the test system chassis area with the test system connected to a power source. Lethal voltages are present and may cause serious injury or death!**

Table of Contents

Section		Page
Revision History		2
Safety Precautions		4
1.0	**STVI Introduction**	11
1.1	Smart Touch View Interface	11
1.2	**Terminology**	12
1.2.1	Acronyms	12
1.2.2	Glossary of Terms	12
1.2.2.1	Pickup (Tap)	13
1.2.2.2	TDM (Time Dial Multiple)	13
1.2.2.3	Inst. (Instantaneous Tap)	13
1.2.2.4	Reset Seconds	13
1.2.2.5	Time Delay	13
1.2.2.6	Test Multiple	13
1.2.2.7	Reach or Diameter	14
1.2.2.8	Angle (Torque)	14
1.2.2.9	Expected Trip Time	14
1.2.2.10	Winding (1,2,3,4) Tap	14
1.2.2.11	Percent (%) Slope	14
1.2.2.12	Percent (%) Harmonic	14
1.2.2.13	Prefault Seconds	14
1.3	**Power Over Ethernet Input Power**	14
1.3.1.	PoE Power Supply-Input Power Cord	15
2.0	**SETUP**	15
2.1	Unpack System	15
2.2	**Communication Ports**	16
2.2.1	Ethernet Port	16
2.2.2	USB 2.0 Interface	16
2.3	**Smart Touch View Interface**	17
2.3.1	Configuration	18
2.3.1.1	Operation Modes	19
2.3.1.2	Battery Simulator	19
2.3.1.3	Last VIGEN is Battery	19
2.3.1.4	Phase Angles	19
2.3.1.5	Fault (Phase) Labels	20
2.3.1.6	System Reset	20
2.3.1.7	Restore Defaults	20
2.3.1.8	Save as Default	20
2.3.1.6	Display Versions (Information Screen)	20
2.3.1.7	Update Firmware	20
2.3.1.8	Language	20
2.3.1.9	Auto Frequency	20
2.3.1.10	Date and Time	21
2.3.1.11	Deviation Alarm	21
2.3.1.12	Change State Immediately / Change on Zero Cross	21
2.3.1.13	Symmetrical Components	21
2.3.1.14	Logging	21
2.3.1.15	Adjust Screen Brightness	21
2.3.1.16	Disable Channel	21
2.3.1.17	Screen Exit	21
2.3.1.18	Ethernet (DHCP) IP Address	21
2.3.1.19	Convertible V/I Selection for Multi-Phase Current Output	22

2.4 **STVI Setting Amplitudes, Phase Angle or Frequency** 22
2.4.1 Numeric Keypad Entry 22
2.4.2 Include Channel in Ramping 23
2.4.3 Control Knob 24
2.4.4 Setting Default Voltage Outputs 24
2.4.5 Setting Default Current Outputs 24
2.4.4 Virtual Alphanumeric Keypad 24
2.5 **STVI File Management** 24
3.0 **STVI – Basic Operating Descriptions** 26
3.1 **STVI / PC Manual Test Screen** 26
3.1.1 PC or STVI to SMRT connection button 26
3.1.2 The Configuration button 26
3.1.3 Add To Report button 26
3.1.4 Battery Simulator button 27
3.1.5 Sequencing 1,2,3..9 button 27
3.1.6 Ramp button 27
3.1.7 Timing Test button 27
3.1.8 Large More button 27
3.1.9 Phase Vector Screen 27
3.1.10 Binary Input Dialog Box 27
3.1.11 Binary More button 28
3.1.11.1 Simple Mode button 28
3.1.11.2 Show All Inputs button 28
3.1.11.3 Show All Outputs button 28
3.1.11.4 Advanced button 29
3.1.11.4.1 Waveform selection button 29
3.1.12 Prefault / Fault buttons 29
3.1.13 Maximum Test Time/Prefault Time/Post Fault Time Settings button 29
3.1.14 Play button 29
3.1.15 All ON/All OFF button 29
3.1.16 Manual Ramp Options button 29
3.1.17 Channel ON/OFF selector button 30
3.1.18 Channel Amplitude, Phase Angle and Frequency buttons 30
3.2 **Setting Phase Angle Relationships** 30
3.3 **Current Sources** 32
3.3.1 Parallel Operation 32
3.3.1.1 Manual Test Screen - Single Phase Up To180 Ampere 33
3.3.2 Currents in Series Operation 34
3.4 **Voltage Sources** 35
3.4.1 Outputs Summed Together 35
3.4.2.1 Balanced Open Delta 37
3.4.2.1.1 Unbalanced Open Delta 38
3.4.2.2 T-Connection 39
3.4.3 3Ø, 4-Wire, Y-Connection 39
3.5 **Testing Relays with the STVI Manual Test Screen** 41
3.5.1 **Simple Manual Pickup or Dropout Test** 41
3.5.2 **Simple Manual Timing Test** 42
3.5.3 **Using Auto Ramp/Pulse Ramp/Pulse Ramp Binary Search** 44
3.5.3.1 Step Ramp Example 44
3.5.3.2 Pulse Ramp Example 44
3.5.3.3 Pulse Ramp Binary Search Example 45
3.5.4 **Using Ramp Wizard** 45
3.5.4.1 EM (Electromechanical) Current Pickup 46
3.5.4.1 Instantaneous Pickup 47
3.5.4.1 Current Target & Seal In 48
3.5.5 **Ramping Battery Simulator Output** 48

3.5.6 **Timing Test** 49
3.5.6.1 Timing Test Setup 49
3.5.6.2 Relay Manufacturer and Curve Selection 51
3.5.7 **Timing Test – Overcurrent Relays** 52
3.5.8 **Timing Test - Voltage Relays** 53
3.5.9 **State Sequence Timing Test – Multi-Shot Reclose Relays** 55
3.6 **Testing Impedance Relays with the STVI Click On Fault** 59
3.6.1 **Common Settings** 59
3.6.1.1 **Tolerance Settings** 59
3.6.1.2 **Expected Trip Time Settings** 59
3.6.1.3 **Direction / OFF Setting Button** 59
3.6.1.4 **Zones/Fault Selection Box** 59
3.6.1.5 **Ground Compensation Settings** 60
3.6.1.6 **CT PT Ratios** 60
3.6.2 **Generic Characteristics** 61
3.6.2.1 **MHO Setting Screen** 61
3.6.2.1.1 MHO Load Encroachment Setting Screen 61
3.6.2.2 **HALF MHO Setting Screen** 62
3.6.2.3 **QUAD Setting Screen** 63
3.6.2.3.1 QUAD Load Encroachment Setting Screen 63
3.6.3 **Relay Library Files** 64
3.6.4 **Impedance - Click On Fault Test Screen** 64
3.6.4.1 Generic Characteristics button 65
3.6.4.2 Relay Library button 65
3.6.4.3 Binary Input Setting button 65
3.6.4.4 Return to Settings Input Screen button 65
3.6.4.5 Play button 66
3.6.4.6 Test All button 66
3.6.4.7 Show All Zones button 66
3.6.4.8 Battery Simulator button 66
3.6.4.9 The Configuration button 66
3.6.4.10 Review Test Report button 66
3.6.4.11 Test Points and Quick Test buttons 66
3.6.4.11.1 Independence Test Points option 66
3.6.4.11.2 IEC60255 Test Points option 66
3.6.4.11.3 Origin Test Points option 66
3.6.4.11.4 Shots Test Points option 66
3.6.4.11.5 Quick Test options 67
3.6.4.12 Fault Dialog Box 67
3.6.4.13 CT PT Ratios Dialog Box 68
3.6.4.14 Ramp Options button 68
3.6.4.15 Control Dialog Box 68
3.6.4.16 Prefault Dialog Box 68
3.6.4.17 Individual Play Test button 68
3.6.4.18 Clear Test(s) button 69
3.6.4.19 Define buttons 69
3.6.4.20 Zone button 69
4.0 **Warranty Statement** 69
5.0 **Service Data** 69
5.1 **Preventive Maintenance** 69
5.1.1 Examine the Unit 70
5.1.2 Upgrading STVI Software 70
5.2 **Service and Repair Instructions** 70
5.2.1 Basic Troubleshooting 71
5.2.1.1 Power Input 71
5.2.1.2 Ethernet Cable 71

6.0 **Preparation for Reshipment** 72
Addendum A SMRT36 73
Safety Precautions 74
1.0 **Operation** 76
1.1 **General Description** 76
1.1.1 Top Panel 76
1.1.2 Front Panel 77
1.2 **Input Power** 78
1.2.1. Input Power Cord 78
1.3 **Voltage Current Generator (VIGEN) Module** 79
1.3.1. Convertible Voltage/Current Amplifier 79
1.3.2. Current Amplifier 80
1.4 **Binary Inputs and Outputs** 81
1.4.1 Binary Inputs 82
1.4.1.1 Start, Stop, and Monitor Gates 82
1.4.1.1.1 Dry Contacts Open 82
1.4.1.1.2 Dry Contacts Close 82
1.4.1.1.3 Application or Removal of AC or DC voltage 82
1.4.2 Binary Outputs 82
1.5 **Battery Simulator** 83
2.0 **SETUP** 83
2.1 Unpack System 83
2.2 **Communication Ports** 84
2.2.1 USB 2.0 Interface 84
2.2.2 PC/OUT Ethernet Port 84
2.2.2.1 Setting SMRT IP Address for Operation with a PC 85
2.2.3 STVI Ethernet Port 86
2.2.3.1 Setting SMRT IP Address for Operation with STVI 86
2.2.4 IN - IEC61850 Ethernet Port 86
2.2.4.1 Setting SMRT IP Address for Networks or IEC 61850 Operations 86
3.0 **Current Sources** 86
3.1 Parallel Operation 87
3.1.1 Manual Test Screen - Single Phase Up To180 Ampere 88
3.2 Currents in Series Operation 89
4.0 **Voltage Sources** 90
4.1 Outputs Summed Together 90
4.2.1 Balanced Open Delta 91
4.2.1.1 Unbalanced Open Delta 93
4.2.2 T-Connection 94
4.3 3Ø, 4-Wire, Y-Connection 94
4.0 **Updating SMRT36 Firmware** 96
5.0 **Warranty Statement** 96
5.1 **Preventive Maintenance** 96
5.1.1 Examine the Unit 97
5.3 **Service and Repair Instructions** 97
5.3.1 Basic Troubleshooting 97
5.3.1.1 Power Input 98
5.3.1.2 VIGEN Input Power, Communication and Control 98
5.3.1.2.1 Replacing a VIGEN 101
6.1 **Preparation for Reshipment** 104
Addendum B SMRT1 105
Safety Precautions 106
1.0 **Operation** 108
1.1 **General Description** 108
1.1.1 Front Panel 108
1.1.2 Side Panel 109

1.1.3 Rack Mount Enclosure Rear Panel 109
1.2 **Input Power** 110
1.2.1. Input Power Cord 110
1.3 **Voltage Current Generator (VIGEN) Module** 111
1.3.1. Convertible Voltage/Current Amplifier 111
1.3.2. Current Amplifier 112
1.4 **Binary Input and Output** 113
1.4.1 Binary Inputs 113
1.4.1.1 Start, Stop, and Monitor Gates 113
1.4.1.1.1 Dry Contacts Open 114
1.4.1.1.2 Dry Contacts Close 114
1.4.1.1.3 Application or Removal of AC or DC voltage 114
1.4.2 Binary Outputs 114
2.0 **SETUP** 114
2.1 Unpack System 114
2.2 **Communication Ports** 115
2.2.1 PC IN Ethernet Port 115
2.2.1.1 Setting SMRT IP Address for Operation with a PC 115
2.2.1.2 Setting SMRT IP Address for Networks 116
2.2.2 61850/OUT Ethernet Port 116
2.2.2.1 IEC 61850 Operations 117
3.0 **Current Sources** 117
3.1 Parallel Operation 117
3.1.1 Manual Test Screen - Single Phase Up To180 Ampere 117
3.2 Currents in Series Operation 118
4.0 **Voltage Sources** 119
4.1 Outputs Summed Together 119
4.2.1 Balanced Open Delta 120
4.2.1.1 Unbalanced Open Delta 121
4.2.2 T-Connection 122
4.3 3Ø, 4-Wire, Y-Connection 122
4.0 **Updating SMRT36 Firmware** 124
5.0 **Warranty Statement** 124
5.1 **Preventive Maintenance** 124
5.1.1 Examine the Unit 125
5.3 **Service and Repair Instructions** 125
5.3.1 Basic Troubleshooting 125
5.3.1.1 Input Power 126
5.3.1.2 VIGEN Input Power and Control 126
5.3.1.3 Binary Input and Output 129
6.1 **Preparation for Reshipment** 131

1.0 STVI Introduction

STVI is a user friendly interface to control the **Megger SMRT and older MPRT** relay test equipment. This manual contains the information that you will need in order to set up and use your STVI with the SMRT or MPRT Relay Test Systems. How the unit operates, some of the different types of testing you can do, and how to save and view your test results with the Smart Touch View Interface software is described. It also covers running the STVI software using the PowerDB software on your PC.

There are two versions of the STVI unit.

- STVI-1 Used with SMRT36
- STVI-2 Used with SMRT1 and older MPRT units. The STVI-2 is an STVI-1 with an external Power Over Ethernet power supply and Ethernet interface unit.

Information regarding SMRT units can be found in the addendums.

1.1 Smart Touch View Interface

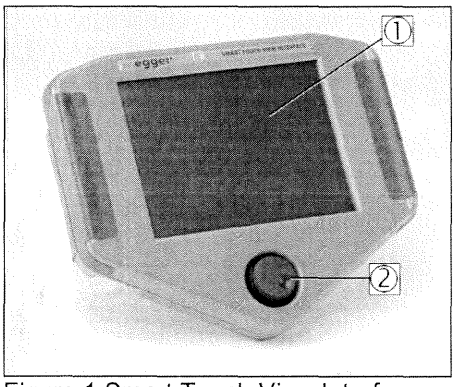

Figure 1 Smart Touch View Interface

1. ***TFT LCD Color Display*** – this 8.5 inch touch panel display provides high resolution, and features Wide Viewing Angle Technology with high luminance for reading in direct sunlight.
2. ***Control Knob*** – this knob will adjust values once the box location of the value to be changed is selected.

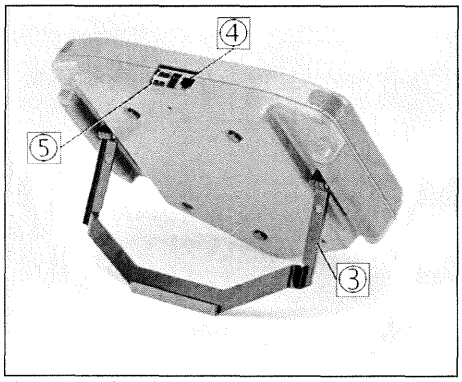

Figure 2 STVI Rear-View

3. ***Built-in Foldout Stand*** – the STVI may be operated as a handheld controller, or foldout the built-in stand and use a desktop controller.

4. ***STVI Ethernet Port*** – this Ethernet port is a 10/100BaseTX PoE (Power over Ethernet) port, and is the SMRT connection port.

5. ***USB Interface*** – the USB 2.0 Interface requires a Type A connector, and is primarily used as a communication and control port. A USB cable is not provided with the test set or in the optional accessories. For control of the SMRT, an Ethernet cable is provided since the STVI gets its power over the Ethernet cable. Even though the STVI has a built-in virtual keyboard, the user can use a USB keyboard with the STVI, as well as a mouse (including Logitech wireless mouse), keyboard and/or mouse are not provided with the accessories. The USB port is also used to update the firmware in the SMRT as well as update the software in the STVI using a USB memory stick. The STVI USB port does not support memory sticks larger than 2 GB. It may also be used to download test results from the STVI for download into another PC with Power DB software for storage or printing.

1.2 Terminology

The acronyms, terms, and definitions used throughout this manual are described below:

1.2.1 Acronyms

AC	Alternating Current
AVTS	Advanced Visual Test Software
CW	Clockwise (rotation)
CCW	Counter Clockwise (rotation)
DC	Direct Current
GPS	Global Position System
GUI	Graphical User Interface
Hz	Hertz
ID	Identification
I/O	Input/Output
kHz	Kilo Hertz
LCD	Liquid Crystal Display
LED	Light Emitting Diode
MAG	Magnitude
MTA	Maximum Torque Angle
PC	Personal Computer
ROM	Read-Only Memory
RTS	Relay Test System
STVI	Smart Touch View Interface
USB	Universal Serial Bus
VAC	Volts Alternating Current
VDC	Volts Direct Current
VIGEN	Voltage / Current Generator Module
VRMS	Volts Root Mean Square
UUT	Unit Under Test

1.2.2 Glossary of Terms

The STVI display screens prompt the user to select, or set, various values. The values vary depending on the relay under test, and the relay setting screen. Many of the terms used are similar in nature and mean virtually the same thing regardless of the type of relay. For example, the term Time Dial is commonly used to define the time dial setting on the relay under test. The

Time Dial could be on an overcurrent relay, or just as easily be on a under voltage relay. Unfortunately, some of the terms described here may apply to different types of relays in different ways, and thus may not cover every possible relay made. However, it is hoped that this glossary will help the user to understand every setting value on every relay setting screen.

1.2.2.1 **Pickup** (Tap)

A numerical value associated with a tap setting on the relay. **Pickup** or Tap is normally associated with a value of current, voltage, phase angle, frequency, watts or Ohms. It is used to define a setting value, pick up value, or minimum operating point, of the relay under test.

1.2.2.2 **TDM** (Time Dial Multiple)

A numerical value normally associated with a TIME CURVE, or defines the use of a specific time curve from a family of curves. Used when conducting a timing test. The TIME DIAL number also may be used in a Time-Curve algorithm in calculating the theoretical operating time of the relay under test.

1.2.2.3 **Inst.** (Instantaneous Tap)

A numerical value associated with a tap setting on the instantaneous element of the relay. Normally associated with a value of current or voltage, it is used to define a pick up value, or minimum operating point, of the instantaneous element of the relay under test.

1.2.2.4 **Reset Seconds**

It is a numerical value of time, normally associated with electromechanical relays. This is the amount of time required for the operating disk to reset. If multiple timing tests are conducted on a relay, the test system will wait the Reset Seconds value prior to applying the next timing test. Numerical relays also can have programmable reset times to coordinate with electromechanical relays.

[!] Note, if the Reset Seconds is set too short, and the disk does not completely reset, then timing error will be introduced to the test.

1.2.2.5 **Time Delay**

It is a numerical value of time, normally associated with the minimum operating time of electromechanical instantaneous relays. This is the minimum amount of time delay associated with the closing of the instantaneous trip contacts. When a value is entered, a line will be drawn associated with the time entered in the trip characteristic display. If one of the test points selected by the user is for testing the instantaneous operation, it will be plotted with the other time delay trip points.

[!] Note that numerical relays also can have programmable Time Delay settings associated with the instantaneous operation.

1.2.2.6 Test **Multiple**

A numerical value normally associated with conducting timing tests. Multiples are normally expressed in terms of whole numbers like 2, 3, 4, etc., times the Relay Pickup, or Tap, value of the relay under test. Fractions of test multiples may also be entered, and the appropriate test values and theoretical trip times will automatically be calculated. If no **Reset Seconds** (see 1.2.2.4) value is entered, then only one timing test point will be conducted when pressing the appropriate STVI Blue Play button. If a Reset Seconds value is entered, after pressing the first blue play button the test system will perform all the Test Multiples in sequence waiting the Reset Seconds between applications of the entered Test Multiples.

1.2.2.7 **Reach** or **Diameter**

A numerical value expressed in Ohms. This value is used to determine the "distance", in Ohms, that the relay under test "sees" either into a line section or a generator.

1.2.2.8 **Angle** (Torque)

A numerical value expressed in degrees. A value used in impedance relays to define the "maximum torque angle" or "line angle" setting of the relay under test (sometimes abbreviated as **Ang.**).

1.2.2.9 **Expected Trip Time**

A numerical value which expresses the operating time of the relay under test, normally used to specify a definite operating time for a given fault value in the testing of multi-zone distance relays.

1.2.2.10 **Winding** (1,2,3,4) **Tap**

A numerical value associated with the Winding Number i.e. 1, 2, 3, 4, etc., of a transformer differential relay, used to define the tap setting value and test for each winding.

1.2.2.11 **% Slope**

A numerical value which establishes the operating characteristic of a differential relay. The operating characteristic of the differential relay is a line, with a slope defined by the ratio of the operating and restraint values.

1.2.2.12 **% Harmonic**

A numerical value which establishes the percent of harmonic restraint for a harmonic restrained transformer differential relay. This value will be used to determine Pass/Fail during the Harmonic Restraint test.

1.2.2.13 **% Prefault Seconds**

It is a numerical value of time, normally associated with relays which require prefault values prior to applying the fault values. This is the amount of time required for the operating disk to set. to a "normal" operating state, or a microprocessor based relay to be properly polarized prior to applying the fault state. A couple of examples would be an electromechanical voltage relay, or a numerical distance relay. If multiple tests are conducted on a relay, the test system will apply the Prefault Seconds value prior to applying the next test value.

[!] Note, if the Prefault Seconds is set too short, and the relay may not completely come to rest (if electromechanical), or be properly polarized, then an error will be introduced to the test.

1.3 Power Over Ethernet Input Power

The STVI gets Power Over Ethernet (PoE) of 48 Volts DC at 0.5 A from the SMRT36. The SMRT1 and MPRT units do not provide the 48 Volts DC required by the STVI. The SMRT1, when ordered with the STVI, comes with a PoE power supply. The PoE input voltage may be from 100 to 240 VAC, 50-60 hertz.

⚠ **CAUTION:**

NOTE: The PoE power supply DC voltage is ON when the power supply is connected to a power source. Connect the Ethernet cable to the Data & Power Out port of the PoE power supply to the STVI Ethernet port prior to connecting to a power source.

1.3.1. PoE Power Supply-Input Power Cord

When the STVI is ordered with the SMRT1, the power cord that comes with the PoE Power Supply is based upon the power cord selection in the SMRT1 style number. Depending on the country, the power supply can come with a NEMA 5-15 male connector, a CEE 7/7 Schuko two prong connector, come with International Color Coded pig-tail wires (light blue, brown and green with yellow stripe) with the insulation jacket stripped ready for installation of the appropriate male connector, or the UK power cord .

North American power cord (part number 620000)

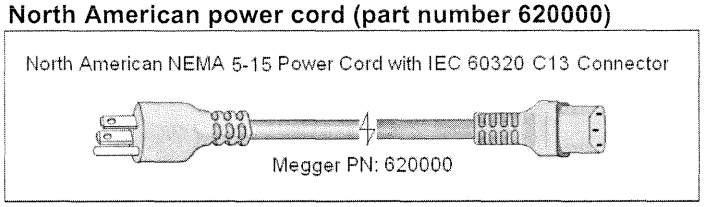

Continental Europe power cord (part number 50425)

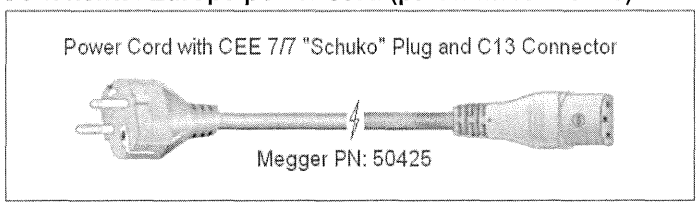

The **International Color Code power cord (part number 15065)** is ready for wiring to the appropriate plug (depending on country). The following colors apply, Brown = Line, Blue = Neutral and Green/Yellow = Ground.

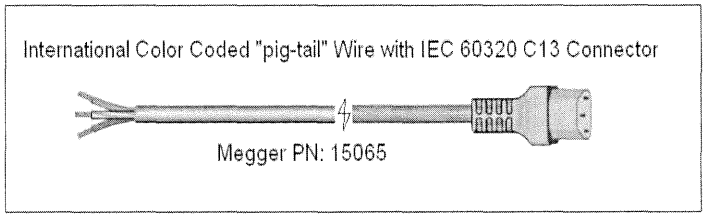

UK power cord (part number 90002-989)

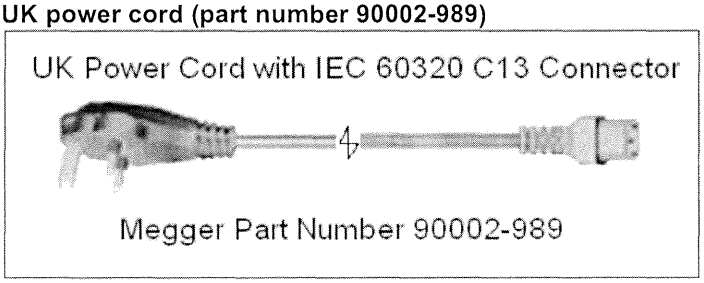

2.0 SETUP

2.1 Unpack System

Unpack the unit and check for evidence of any shipping damage. If there is any visual damage, immediately notify the freight carrier to make a damage claim, and notify Megger of the damage.

2.1.1 Initial Start Up

1. With the Ethernet cable supplied with the unit connect the STVI Ethernet Port on the SMRT36 unit to the Ethernet port on the top of the Smart Touch View Interface (STVI). For operation with the SMRT1 or MPRT units, connect the **Data & Power Out** port of the PoE power supply to the STVI Ethernet port, and the PoE power supply **Data In** port to the SMRT1 PC/IN port or the MPRT LAN1 port.

2. Before connecting power to the unit, make sure the SMRT POWER ON/OFF Switch is in the OFF position (0). Plug the unit line cord into an appropriate power source and turn the POWER ON/OFF Switch to ON (I). As the SMRT unit goes through its power up sequence, in about a minute the STVI power up screen will appear, then the manual start up screen will appear. For the SMRT1 or MPRT units, connect the PoE power supply power cord to an appropriate power source.

2.2 Communication Ports

There are two types of communication ports on the STVI, one Ethernet, and two USB ports.

2.2.1 Ethernet Port

There is one Ethernet port on the STVI for connecting to the SMRT units. On the SMRT36 the port is labeled STVI. For the SMRT1 it connects to the PoE power supply unit, and the PoE unit is connected to the PC/IN port on the SMRT1 (or LAN1 port on the MPRT).

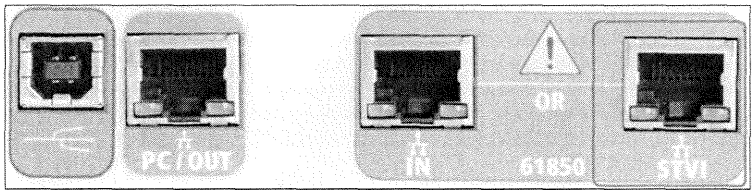

Figure 3 STVI port on SMRT36

2.2.2 **USB** 2.0 Interface

There are two USB 2.0 Interface ports on the STVI unit. These ports are used for upgrading firmware to the SMRT unit, or upgrading the STVI software using a USB Memory Stick. They may also be used in conjunction with a USB mouse for ease of manual control, even a USB wireless mouse maybe used with the STVI.

[!] Regarding control of the SMRT with the USB port, see section 2.2.1 in Addendum A SMRT36.

Ethernet Port is a 10/100BaseTX port, and is the primary PC connection port. This port supports MDI/MDI-X auto cross over configuration, which means both standard and "crossover" Ethernet cables may be used. The SMRT comes standard with a crossover cable. This port may also be used to interconnect multiple SMRT units together for synchronous multi-phase operation.

2.3 Smart Touch View Interface

The STVI is the manual control and user interface for the unit. All manual entries will be made through the STVI unless the unit is connected to a personal computer.

During the power up sequence the test system automatically does self-test to insure everything is operating properly. Once the system has completed its self checks the Introduction Screen will appear, see the following figure.

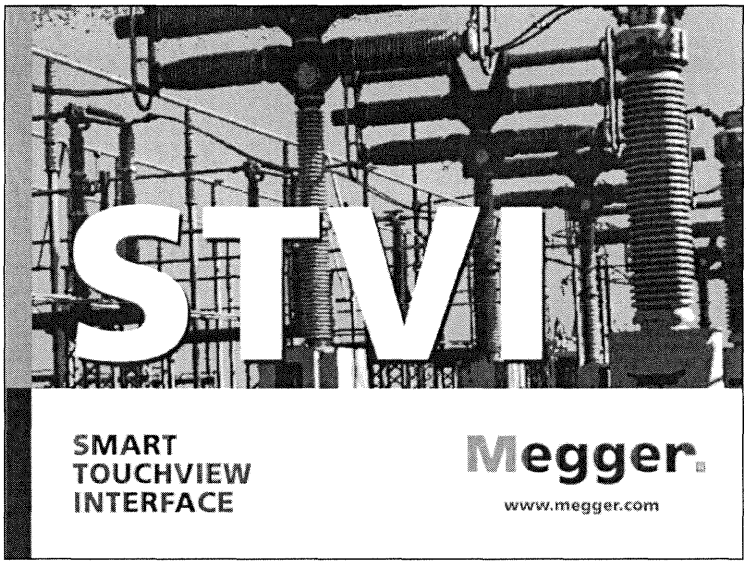

Figure 4 Introduction Screen

Shortly afterward the screen will change to the manual test screen. Depending on how many channels are available the STVI will provide the appropriate number. For example, in the following figure is the power up manual test screen for a 3 channel SMRT36 unit.

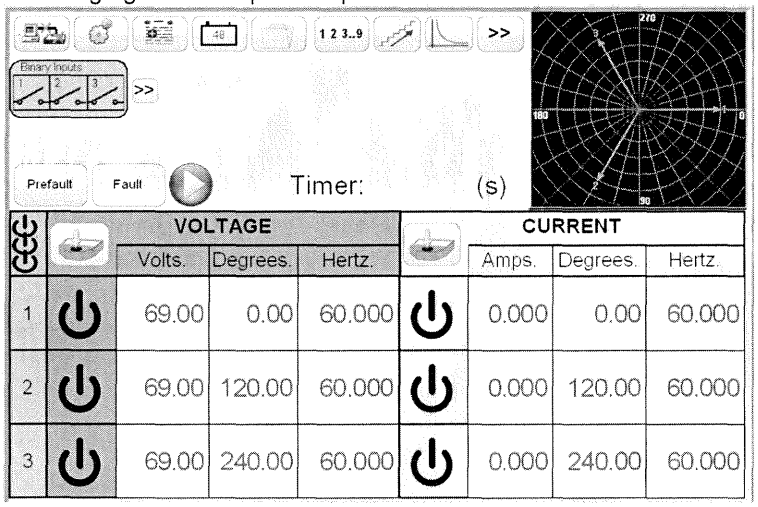

	VOLTAGE			CURRENT		
	Volts.	Degrees.	Hertz.	Amps.	Degrees.	Hertz.
1	69.00	0.00	60.000	0.000	0.00	60.000
2	69.00	120.00	60.000	0.000	120.00	60.000
3	69.00	240.00	60.000	0.000	240.00	60.000

Figure 5 Manual Test Screen

In the upper left hand corner, click on the SMRT connection button and the PC or the STVI will auto detect the SMRT unit connected and automatically set the IP address through the

Ethernet ports. The STVI will auto-detect the SMRT unit (does not require the user to input an IP address). Once the STVI detects and connects to the unit, the icon connection line will turn green. If using the PC version it too can auto-detect the SMRT unit connected to the PC. On the PC version, the unit might not auto detect due to firewall settings. In this case the firewall can be turned off or you can enter the IP address directly using the PowerDB instrument configuration

screen by clicking on the Instrument Setup icon on the PowerDB tool bar . From the Instrument Configuration Screen, shown in the following figure, click off the check mark in the Auto Discover Unit box.

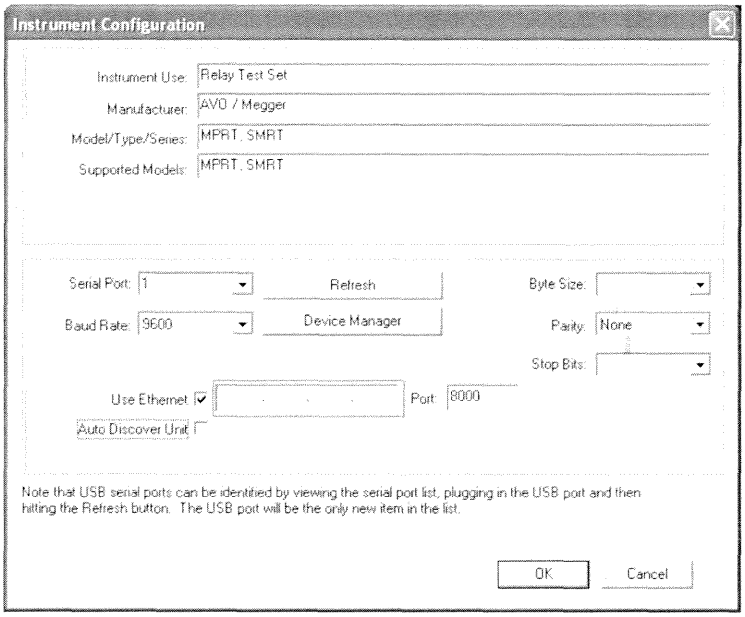

Figure 6 PowerDB Instrument Setup Screen

Here the user can enter the IP address directly into the box highlighted in red. The IP address of the unit can be determined by counting the number of times the Binary Output led flashes at the end of boot up cycle (the address is 169.254. <#flashes>.0). If the unit flashed four times, the address would be 169.254.4.0 . If the unit is on a network with a DHCP server, the user must use the Auto Discovery mode.

2.3.1 Configuration

Pressing the Configuration button will allow the user to configure both the SMRT hardware and STVI software for items such as language and phase angle rotation. Pressing this button will display the Configuration screen.

Note: The following button descriptions vary depending on hardware configuration, and if using an STVI or the PC version of the STVI software. See the following Configuration Screen example.

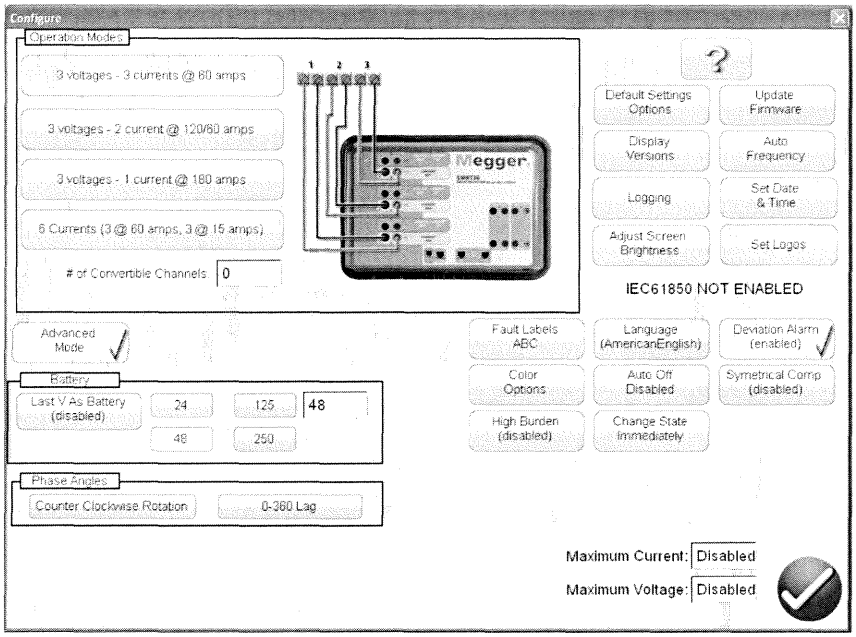

Figure 7 STVI Configuration Screen for SMRT36
Note: the picture will change depending on type of unit

2.3.1.1 Operation Modes

The user can select the output configuration. The connection picture will change with the selection indicating to the user how to connect the outputs. With the selection the STVI display will also change in combination with the selected outputs. For example, if a user needs more than 60 amps, the '3 Voltages – 1 Current @ 180 amps' option can be selected and will allow the user to enter the value directly. The display will change to a single current channel and the value entered will automatically be distributed across all available current generators.

2.3.1.2 Battery Simulator

For units with the 'P' System Board Option that includes the battery simulator, the user can either select one of the common battery voltage levels, or enter the desired voltage level in the window provided. Upon returning to the test screen the voltage value will be displayed in the Battery Simulator button . Press this button to turn the output on/off. The button changes color with the change in output. Note: SMRT1 units do not have a Battery Simulator.

2.3.1.3 Last VIGEN is Battery

Selecting this button will convert the last voltage channel (normally #3) to a battery simulator. This is especially useful if the unit does not have the system board with a battery simulator ('P' option).

2.3.1.4 Phase Angles

Select the desired phase angle display for the Phase Vector Screen. The phase angle designations can be set to 0 to 360 degrees Lead/Lag, or ± 180 degrees (positive angles are leading). The rotation can also be set to either counterclockwise or clockwise rotation. The factory default is 0-360° lagging. Press the Phase Angle select button, and the following screen will appear.

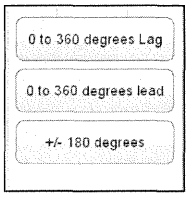

Figure 8 Phase Angle Selection Screen

See section 3.2 for more details on setting phase angle relationships.

2.3.1.5 Fault (Phase) Labels

This button allows the user to set labels for the test reports such as ABC, RST, L1L2L3, etc.

2.3.1.6 System Reset

Press this button to reset the system after an alarm condition such as shorting out a voltage channel. When a VIGEN shuts down due to an alarm condition to protect itself, the user must reset the system after clearing the faulted condition.

2.3.1.7 Restore Defaults

Pressing this button provides the ability to restore the original system power up defaults. Factory default settings include language, system frequency, phase angle rotation, etc.

2.3.1.8 Save as Default

Press this button and all of the changes made to the Configuration Screen and most of the default values for all screens are now saved as the power up defaults.

2.3.1.6 Display Versions (Information Screen)

Pressing this button will display firmware and driver versions and build dates.
This information is useful when calling Megger for service or technical support related issues.

2.3.1.7 Update Firmware

This button is used to update the SMRT firmware and/or the STVI software.

2.3.1.8 Language

This button allows the user to select the desired display language. The factory default is English, but may be changed to French, Spanish, or German.

2.3.1.9 Auto Frequency

In the default Auto Frequency position the SMRT will measure and determine the input frequency and automatically set the default output frequency to the line frequency. Other choices are 50 Hz, 60 Hz, and 16.667 Hz. so that the output frequency can be something other than the input line. In addition, the user may select Line Sync so that the output phase angles are in a direct relationship with the positive going zero crossing of the input line frequency.

2.3.1.10 Date and Time

Press this button to reset the Date and Time in the STVI. This information is critical for saving tests and test results in the unit internal file manager. The PC version uses the PC time and date.

2.3.1.11 Deviation Alarm

This button turns the deviation alarm on and off. When the deviation alarm is on and the waveform has excessive deviation, the alarm will sound.

2.3.1.12 Change State Immediately / Change on Zero Cross

Unit defaults to the Immediate Mode where amplitudes, phase angles and frequency changes take place immediately upon command. The Zero Cross Mode is used to force all amplitude, phase angle or frequency changes to take place at the positive going zero crossing of the sine wave (normally used when testing frequency relays).

2.3.1.13 Symmetrical Components

Pressing this button will change the vector display to show positive, negative and zero sequence vectors instead of amplitude and phase.

2.3.1.14 Logging

Select this button to log commands sent to the SMRT unit.

2.3.1.15 Adjust Screen Brightness

The brightness is adjustable on the STVI. The display will always be visible since hardware limits the brightness from becoming too bright or too dark to be seen. Press this button and use the Control Knob to increase or decrease the brightness. For PC version use the PC screen control to adjust.

2.3.1.16 Disable Channel

In case of a channel failure the user can disable the failed channel. Once this is performed a second unit such as a SMRT1 or SMRT36 can be connected and 3-phase relay testing can continue. The failed channel will be ignored and the software will automatically recognize the externally connected SMRT unit and assign it the next channel number.

2.3.1.17 Screen Exit

To exit the screen and return to the previous screen press the green check button (you will see this same button on other screens).

2.3.1.18 Ethernet (DHCP) IP Address

As mentioned at the beginning of section 2.2, the STVI will auto-detect the SMRT unit (the DHCP mode does not require the user to input an IP address). If the unit is on a network with a DHCP server, the user must use the Auto Discovery mode. Using the STVI, pressing the DHCP button will produce the IP Address Dialog box. As mentioned previously, the IP address of the unit can be determined by counting the number of times the Binary Output led flashes at the end of boot up cycle. The address is 169.254.<#flashes>.0. If the unit flashed 10 times, the address would be 169.254.10.0.

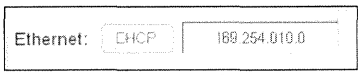

Figure 9 STVI Configuration Screen Ethernet IP Address Dialog Box

If using the PC version it too can auto-discover the SMRT unit connected to the PC. On the PC version, the PC might not auto detect due to firewall settings. In this case the firewall can be turned off, or you can enter the IP address directly using the PowerDB instrument configuration screen by clicking on the Instrument Setup icon on the PowerDB tool bar . Shown in the figure below is the PowerDB Instrument Configuration Screen. Click off the check mark in the Auto Discover Unit box. Here the user can enter the IP address directly into the box highlighted in red.

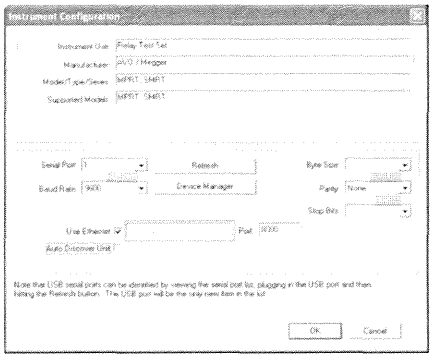

Figure 10 PowerDB Instrument Configuration Screen

2.3.1.19 Convertible V/I Selection for Multi-Phase Current Output

In the Configuration Screen, in the Operation Mode sections, (assuming you have a SMRT36 with three VIGEN Modules) select the "6 Currents" mode. Upon returning to the Manual Test screen, the screen will be changed to show 6 current channels.

2.4 STVI Setting Amplitudes, Phase Angle or Frequency

Pressing an amplitude, phase or frequency button (right clicking if running on a PC) will display the following pop-up numeric keypad to enter the value you want to change.

2.4.1 Numeric Keypad Entry

The numeric keypad entry provides an interface to the user when entering values in the various screens. Touching a data entry window (Amplitude, Degree or Frequency) on the STVI (right mouse click in the PC version) will activate the Numeric Keypad. Use the numeric keys to type in the value you want and press either the button or the Balance button. Pressing the clear all << will clear the value you just entered. Pressing the clear last digit < button will clear the least significant digit of the value in the display window.

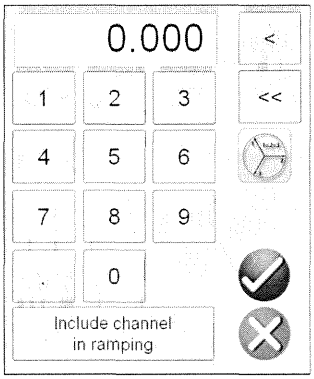

Figure 11 STVI Numeric Keypad

The button will enter the value and take you back to the test screen. Press the Balance button if you want all the voltage or currents values to be the same amount. If setting phase angles, and you want all three phases to be shifted the same amount from the defaulted values, enter the amount of phase shift desired in the A Phase window, and press . For example, the default is 0, 120 and 240 degrees. Press on A phase current phase angle and enter 30, press , and the test screen will now show 30, 150, 270 degrees. Pressing Cancel will return the user to the previous screen that is in use. Pressing **Include channel in ramping** will select that value to ramp when using the control knob.

2.4.2 Include Channel in Ramping

When this button is pressed the window around the channel magnitude is highlighted indicating that it is now set to be ramped manually using either the Control Knob on the STVI, or the up down arrows/mouse wheel on the PC keyboard (PC version). If the channel is already selected for ramping, this button will be labeled 'Remove channel from ramping'. The magnitude may now be ramped up or down using the default increment setting. If the user wants to ramp more than one channel, change the increment, or change the value to be ramped (Amplitude, Phase or Frequency), on the STVI display screen press the Manual Ramp Options button (Control Knob or Up Down Arrows Icon) to display the following screen.

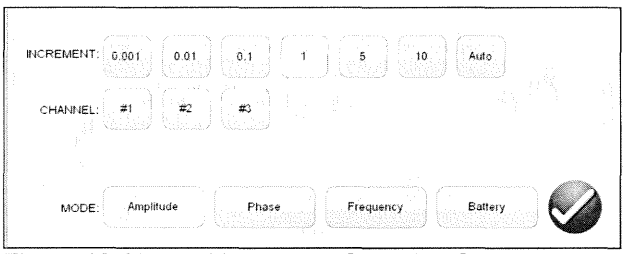

Figure 12 Channel Increment Selection Screen

Increment – Select the desired increment. Color change will indicate the value selected.
Channel – Select the desired channel(s). The channel button will change color indicating the selected channel(s) to be ramped.
Mode – Select Amplitude, Phase, Frequency, or Battery as the value to be ramped. Press or click on the green check button to return to the test screen. One click on the STVI Control Knob or one press of the Up Down arrow on the PC keyboard will change the output by the Increment setting. If the Auto Increment button is selected the STVI will automatically select the increment depending on how fast the control knob is being rotated, the faster the rotation the larger the increment.

2.4.3 Control Knob

The control knob will change the values after touching the display to highlight the value that requires ramping. Clockwise rotation increases and counterclockwise decreases. In the Auto Increment Mode the control knob uses a speed control algorithm to provide fine adjustment, with a slow rotation (one click equals 1 digit of the lowest increment level for the value being ramped), and a larger step adjustment with a faster rotation. The Control Knob can also be used to scroll up and down when viewing the test results in the Add Results and View Results screens.

2.4.4 Setting Default Voltage Outputs

The STVI comes with factory default settings, which can be changed to suit the user. Using the numeric keypad entry as described above, select the first voltage channel and enter the desired phase to neutral (earth) value, for example; 67. Press the Balance button, the green check button, and all channels will now have a setting of 67 volts. Select the Configuration button, and then select Save as Default (see section 2.3.1.8 Save as Default). The next time the unit is powered up, the default voltage values will all be at 67 Volts.

2.4.5 Setting Default Current Outputs

Similar to setting the default voltage values, the Default Current changed to suit the user Using the numeric keypad entry as described above, select the first current channel and enter the desired phase to neutral (earth) value, for example; enter 1, Press the Balanced button, and button, and all channels will now have a setting of 1 Ampere. Select the Configuration button, and then select Save as Default (see section 2.3.1.8 Save as Default). The next time the unit is powered up, the default current values will all be at 1 Ampere.

2.4.4 Virtual Alphanumeric Keypad

The virtual alphanumeric keypad allows the entry of ASCII text into the appropriate STVI windows. This keypad is used to enter names for the binary inputs and outputs, names for each state in the Sequence Test, or file names in the file management screen.

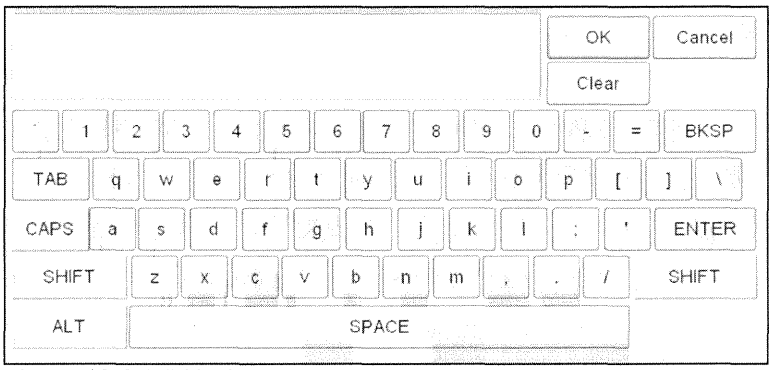

Figure 13 STVI Keyboard

2.5 **STVI File Management**

The file management display is used by the STVI to access files stored in the STVI's internal memory. This display will allow test files to be loaded, make or change directories, rename files and directories, delete files and directories that were created by the user. To access the File Management system, touch the File Folder top center of the test screen. This icon only

appears on the STVI (not on PC version). It provides the user the ability to save tests, or open saved tests. If using the PC version users will have the PowerDB file system to save test (job) files (see PowerDB Help). For STVI users' pressing on the File Folder presents the user with the following tool bar. It defaults with the Save Current Form File Folder highlighted.

Figure 14 STVI File Folder Tool Bar

Note: Pressing the Power ON/OFF button will power down the STVI but is not required for a safe shutdown.

Pressing on the highlighted folder will provide the user with the following file explorer.

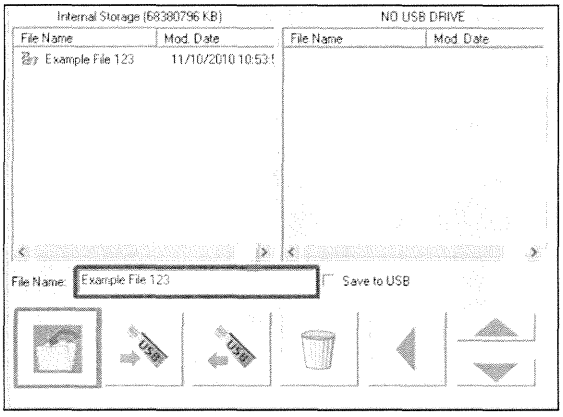

Figure 15 STVI File Folder Explorer

Press in the File Name window and the user will be provided with the virtual keyboard to enter a file name. The file can then be saved to the internal memory or saved to a USB memory stick. This same window is also used to open saved files. To save results directly to a USB memory stick check the Save to USB button. To transfer test results from the STVI to a USB memory stick use the up down blue colored buttons to selected the desired test result to be transferred, and then press on the ⇨USB button. To retrieve a test file from a USB memory stick press on the ⇦USB button to retrieve the selected file from the list of files that appear in the right hand window. To delete a file use the up down arrows to highlight the file, then press on the trash can icon. The left pointing blue arrow ◀ is the exit button to go back to the test screen. To open an existing test file, from the File Folder tool bar, press the Open File Folder icon . The user will be presented with the File Folder Explorer. Use the up down blue arrows buttons to highlight the desired file to be opened, and then press the Open File Folder button in the lower left corner. The user will be presented with a menu bar to open a New Test, or to open the file selected showing the date and time of the file saved. Pressing the date / time button will open the saved test. To view the saved results press the >> More button in the upper right display next to the vector screen, then press the View Report button.

3.0 STVI – Basic Operating Descriptions

This section describes basic operating procedures for using the STVI with the SMRT for such applications as basic pickup or dropout, basic timing test, paralleling current outputs, conducting harmonic restraint tests, series of potential sources to provide higher than rated potential, and forming various three phase voltage outputs.

3.1 STVI / PC Manual Test Screen

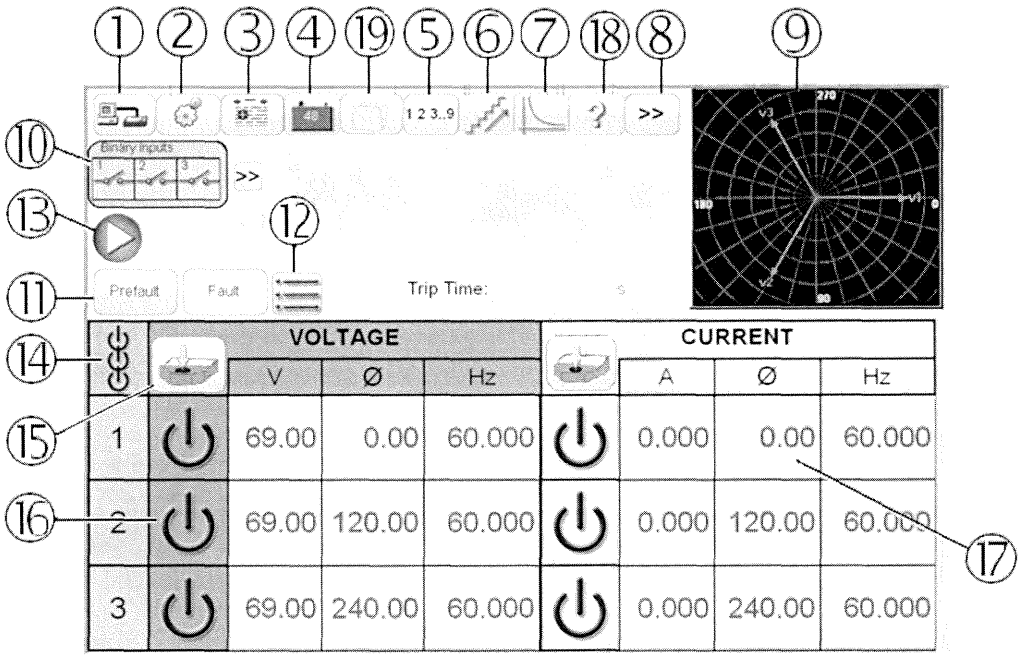

Figure 16 Manual Test Screen

3.1.1 PC or STVI to SMRT connection button

Click on the button and the PC or the STVI will auto detect the SMRT unit connected and automatically set the IP address through the Ethernet ports. If the button shows two red Xs it indicates that there is no communication to the SMRT. If the link is green it indicates that the unit is 'on-line' and ready for operation.

3.1.2 The Configuration button

Press the button to go to the STVI Configuration Screen. See Section 2.2.1 Configuration for more information of the Configuration Screen.

3.1.3 Add To Report button

This button will add the present test result to the report. It also displays the report and allows the user to name the test, enter limits, comments or deficiencies. Reports can be saved to the STVI internal memory and transferred to PowerDB via a USB memory stick. Previous tests results can be loaded and the 'Retest' option can be used to repeat the test using the same parameters as the previous test.

3.1.4 Battery Simulator button

The Battery Simulator button – Turns the Battery Simulator ON and OFF by pressing the button. The color changes red for ON and black for OFF. The voltage to be applied is displayed in the button and can be changed by pressing the configuration button.

3.1.5 Sequencing 1, 2, 3..9 button

Press this button to go to the Sequencing Test screen used for testing reclosing type relays, setting up multiple vectors and general multi-state sequencing

3.1.6 Ramp button

Press the Ramp button to go to the Ramp Test screen. This button is used for doing pick up and drop out tests on any type of relay. It can also be used to perform a general purpose linear step ramp, pulse ramp, or pulse ramp binary search.

3.1.7 Timing Test button

Press this button to go to the Timing Test screen to easily time overcurrent, under/over voltage and frequency relays. The STVI software has IEEE and IEC standard time curve algorithms built-in. In addition, it includes time curves and time curve algorithms for hundreds of different specific relays selectable by manufacturer, model number, and curve shape (inverse, very inverse, definite time etc.).

3.1.8 Large More button

Pressing this button will provide more options such as turning the meter mode on (for displaying metered amplitudes), View Report, and provide access to the built-in Help screen. Other relay specific tests are also listed here.

3.1.9 Phase Vector Screen

This display shows the phases and angles of the test values. Pressing on the screen display provides a full screen display of the test vectors with amplitudes and phase angles. Pressing it again reduces it back to its original size. If used with the Symmetrical Components (see Configuration button) the display will display the positive, negative and zero sequence component values.

3.1.10 Binary Input Dialog Box

The Binary Inputs selection bar and More button – The first 3 binary inputs are displayed showing their present state. Pressing binary input windows #2 and above will display the dialog shown in Figure 21A. For conducting a timing test, press binary input #1 will display the dialog shown in Figure 21B.

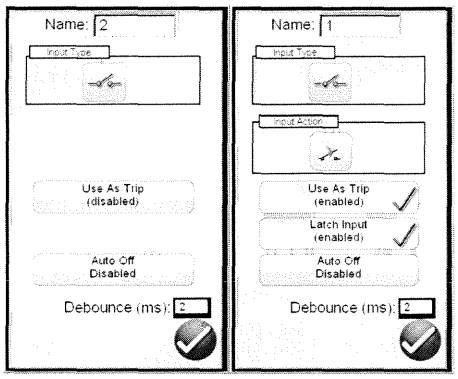

Figure 17 A Binary Input #2 Monitor Mode / 17B Binary Input #1 Time Trip Mode

In Binary Input #2 the use as Monitor Mode the unit is sensing for closing of normally open relay contacts, as displayed by the icon in the Input Type window, or opening of normally closed relay contacts. When the contacts close the LED for the selected binary input will light. If a normally closed contact opens the light will go out. To sense voltage press the Input Type contact icon and it changes showing a voltage sine wave. In Voltage Sensing Mode the unit is sensing the application or removal of an AC or DC voltage. For Timing Tests press either binary #1, or press the **Use as Trip (disabled)** button in binary #2, and the dialog box changes to **Use as Trip (enabled)**. The default settings are dry contacts as indicated by the Input Type, and Input Action defaults to show the Closing of the Normally Open contacts. To change to the opening of Normally Closed contacts press the Input Action icon and it changes to show closed contacts opening. Pressing the **Auto Off** button will provide the user three selections; **Voltage**, **Current**, or **Voltage & Current**. This provides auto off of the voltage, current or voltage & current channels upon tripping of the relay. For most timing applications the timer should be set to to **Latched Input (enabled)** mode, which means the timer will stop on the first contact closure. The **Latched Input (disabled)** mode means if the contact bounce the timer will include the bounce time.

3.1.11 Binary More button >>

Pressing or clicking on the binary more button (next to binary input button) reveals more Binary Input and Output options.

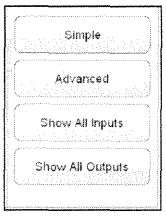

Figure 18 Binary Input and Output Options

3.1.11.1**Simple** Mode button: The unit defaults to the Simple Mode where only 3 binary inputs (SMRT1 will show 1) are shown.

3.1.11.2 **Show All Inputs** button: Press or click on the Show All Inputs button to reveal all the Binary Inputs that are available and the first two Binary Outputs (or the maximum available).

3.1.11.3 **Show All Outputs** button: Press or click on the Show All Outputs to reveal all 6 Binary Outputs (or the maximum available) and the first 6 Binary Inputs (if available). To set a Binary Output press or click on the desired binary output, and select Close to close the contact (the default is Open).

3.1.11.4 **Advanced** button: Press or click on the Advanced button and the first 6 Binary Inputs are provided with the first 4 Binary Outputs, plus the Waveform selection button .

3.1.11.4.1 **Waveform** selection button: Press or click on the Waveform selection button. The unit defaults to the 1 position, which provides a sine wave with the fundamental power up default frequency. The user can define up to four waveforms, the default 1 (Fundamental), plus a Second (2), Third (3) and Fourth (4) Waveforms. All four waveforms will be summed together to create a complex waveform from any, or all, of the selected outputs. If no value is entered for the second, third or fourth waveforms then the output will simply be the Fundamental default frequency sine wave. Any amplitude, phase angle or frequency can be specified for each of the four waveforms. This feature is normally used when generating a second, third or fifth harmonic waveform when testing harmonic restraint transformer differential or generator neutral protection relays.

3.1.12 Prefault / Fault buttons

Pressing these buttons will toggle and set the Prefault and Fault amplitudes, phase angles and/or frequencies. If the outputs are on, toggling between the two will apply the prefault and fault values repeatedly with each toggle. This is an especially helpful tool for the user who has to adjust mechanical contacts. It is also used in conjunction with the following Items 13, 14, 15 and 17 for simple timing tests.

3.1.13 Maximum Test Time/Prefault Time/Post Fault Time Settings button

Maximum Test Time / Prefault Time / Post Fault Time Setting button – Pressing this button will present a setting window, which allows the user to enter the amount of time in seconds that the Maximum Test Time, Prefault Fault and Post Fault Time values should be applied. When the timing test is started, the time window will start counting down starting from the Prefault value. When the prefault time has lapse the Fault values will be applied to the relay under test and the Timer window will start counting until the relay trips. When the relay trips, the Timer will stop and display the operating time of the relay, and the outputs will stay on for the Post Fault Time value entered. If the Auto Off is set in the Binary Input configuration screen the outputs will turn off immediately after the operation (see 3.1.10 Binary Input Dialog Box section). If the Auto Off is not enabled the outputs will still turn off at the end of the Post Fault time setting. If the relay has not tripped by the Maximum Test Time setting the test will stop and outputs will turn off automatically.

3.1.14 Play button

Pressing or clicking the blue play button will apply the prefault vector, start the countdown of the Prefault Time setting, then step to the Fault values and look for the relay under test to operate.

3.1.15 All ON/All OFF button

Pressing or clicking on this button either turns all of the selected outputs ON, or if one or more of the outputs are ON, it will turn all of the outputs OFF. The center color of this button changes to green when one or more outputs are ON and indicates that pressing the button will turn all outputs off, with the exception of the Battery Simulator. To turn off the Battery Simulator press the Bat SIM button.

3.1.16 Manual Ramp Options button

If using the PC version the ⇧⇩ buttons will be displayed. If using an STVI controller the Control Knob icon will be displayed. Pressing either of these two will present the user with a window to select the desired level of increment for manually ramping the outputs, the desired channel(s) to be ramped, and what is to be adjusted (amplitude, phase angle or frequency). If using the PC version use the keyboard up down arrow keys (or the mouse wheel) to manually

adjust the selected value(s) at the desired increment level. If using the STVI one click on the Control Knob equals the increment setting. When ramping phase angles, the Up arrow key ramps the phase angle in the counterclockwise direction, and the down arrow key ramps in the clockwise direction. If the Auto Increment button is selected the STVI will automatically select the increment depending on how fast the control knob is being rotated; the faster the rotation the larger the increment.

3.1.17 Channel ON/OFF selector button

This button works in junction with the # 14 All ON/OFF button. Pressing the button the center of the button changes color indicating the output is selected to turn ON. After pressing the All ON button turns the selected outputs on. Pressing the channel button individually turns the selected channels ON and OFF. This allows the user to turn individual outputs ON and OFF without affecting other channels.

3.1.18 Channel Amplitude, Phase Angle and Frequency buttons

If using the PC version, a right mouse click in the selected window will present the user with a numeric keypad and dialog box window for setting either individual values or setting multiple values swiftly and easily. For example, to change the default voltage values for all three phases, enter the desired voltage value in the entry window and then press the Balance button. All of the values will change to the desired output voltage. The same is true for both Phase Angle and Frequency.

3.2 Setting Phase Angle Relationships

Think of each V/I Generator module as a vector generator. Each module has an internal zero reference to which it references its phase angle settings as displayed on the STVI. This applies to phase angle settings between the voltage and current outputs. When setting a phase angle between two outputs, it is recommended that one output be set at 0° and the other output be referenced to the 0°. This is for operator convenience only. When setting an angle, the operator has a multiple of choices, depending on the Default Phase Angle setting, see 2.2.1.4. In the engineering world and in the following figures, the lagging diagram displays negative rotation and will create negative sequence components, while the Lead and +/-180 diagrams display positive rotation which is normal system activity.

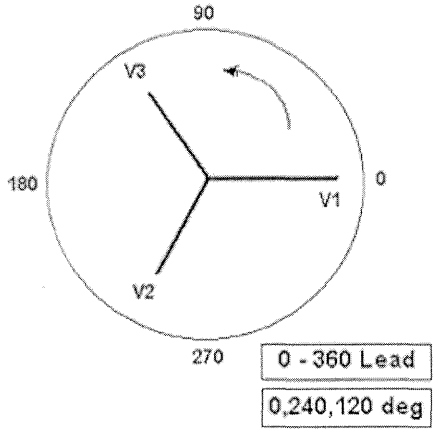

Figure 19 Positive Phase Rotation Diagrams

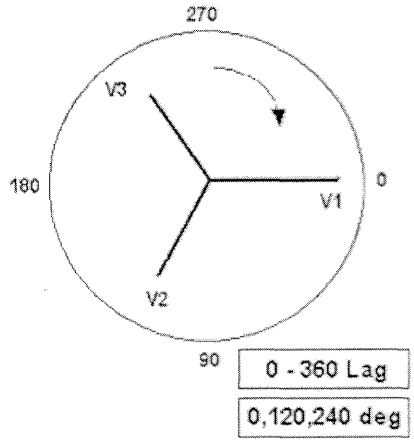

Figure 20 Negative Sequence Phase Rotation Diagrams

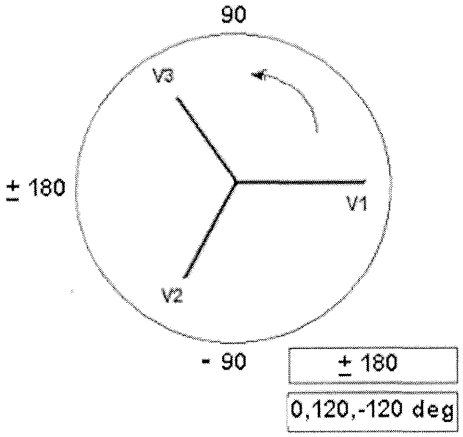

Figure 21 Positive Phase Sequence Rotation Using ± 180°

For example, using 0-360 Lag (0, 120, 240) setting an angle of 30° between the two outputs would look like:

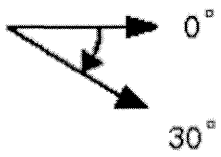

The reference output is 0° and the second output is rotated 30° clockwise. In other words, the angle is lagging the referenced source by 30°. Conversely, if the angle decreases in the counterclockwise direction from 359.9° toward 0.0°, for a setting angle of 300.0°, the second output would look like:

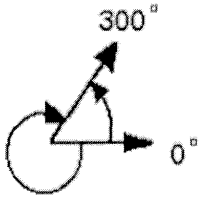

The reference output is 0° and the second output is rotated to 60° in the counterclockwise direction. In other words, the second output lags the reference output by 300° or leads it by 60°. The user may default to phase angles to ±180° with the - (negative) angles lagging and the + (positive) angles leading. Therefore, to set an angle of + 10° leading, the vector relationship would be:

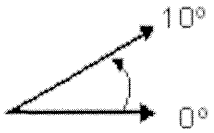

3.3 Current Sources

3.3.1 Parallel Operation

Each SMRT current amplifier is capable of providing 30 Amperes continuous, and up to 60 amperes for 1.5 seconds for testing instantaneous trip elements. When more than 30 amps single phase is required for long durations, or more than 60 Amps for testing instantaneous elements, two or three current channels may be connected in parallel to provide 60 or 90 Amperes continuous, and up to 120 or 180 amperes for 1.5 seconds.

Note: If an **F** or **C** appears in the 5th digit of the style identification number (i.e. 30P1**F**0A0S1) the current returns are floating (isolated from each other and ground). Those units with a style number **G** or **E,** the current returns are common together internally and connected to earth ground.

To parallel the current channels of the unit, perform the following:

If using the sleeved multi-lead current test leads (part number 2001-396), all of the black return leads are interconnected together inside the sleeve so they will all share the return current together. Connect each current channel to the relay under test (both red and black terminals to the load). Each Megger test lead is rated for 32 Amperes continuous. If using test leads other than those supplied by Megger insure that the wire has sufficient size to carry the test current.

For the earth grounded common return (G) units, there is an internal common ground between the current channel return terminals. If using separate individual test leads, all of the return leads will need to be common together at the load as shown in the following figure. By not connecting a return lead to all of the current channels in use, part or all of the return current will be forced through the internal ground. That means with a 3 channel unit up to 180 Amperes could be forced through the internal common ground, and may cause damage to the internal common returns. Therefore, it is important that the parallel connections must be made at the relay. See the following figure.

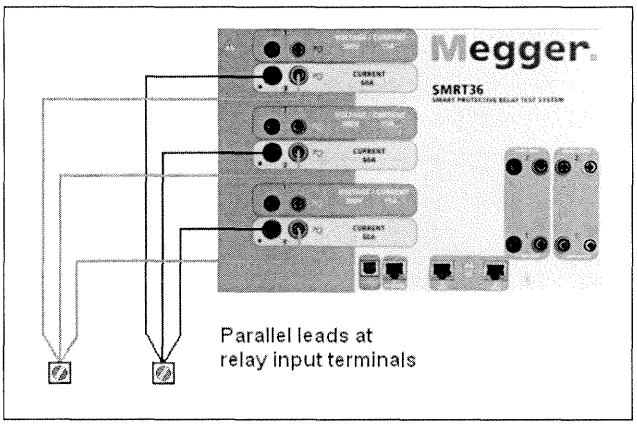

Figure 22 Parallel of All Three Current Outputs

3.3.1.1 Manual Test Screen - Single Phase Up To 180 Ampere

For ease of use and operator convenience, go to the Configuration screen and select the Operating Mode of ***3 Voltages – 1 Current @ 180 amps***. When you return to the manual test screen there will be one current channel displayed, as shown in the following figure.

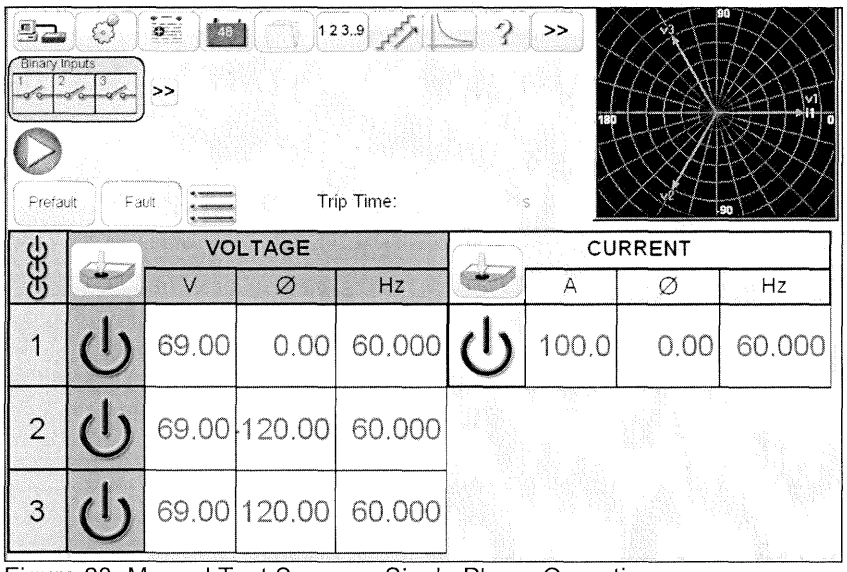

Figure 23 Manual Test Screen – Single Phase Operation

The STVI will automatically set all three currents in phase with each other and divide the current equally between the three current amplifiers. When setting an output, simply enter the value of the desired output current. For example, for an output of 75 Amperes, enter 75, while each current amplifier will be providing 25 Amperes. The current can also be phase shifted. Simply enter the desired phase angle and all three currents will be phase shifted together.

If two current channels that are to be used in parallel, leave the unit in the default three phase configuration. Connect the two current outputs to the load as shown in the following figure.

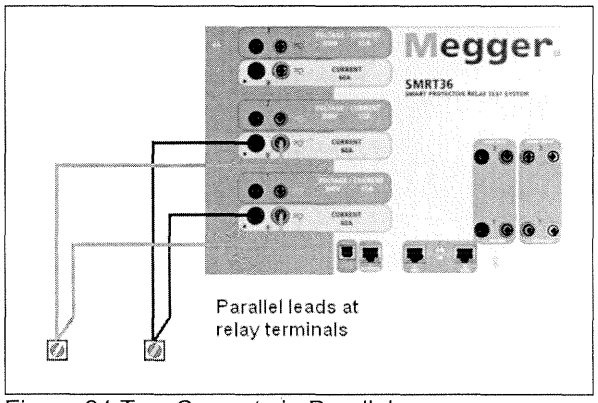

Figure 24 Two Currents in Parallel

Set each channel to one-half of the output requirement. ! Be sure and ***reset current channel #2 to 0 degrees*** so that it will be in-phase with current channel #1. With both current channels selected, turn output on by pressing or clicking on the ALL ON/OFF button. Always use the ALL ON/OFF button to turn both current channels on and off together. For manually ramping outputs, if using the PC version of the STVI software the ⇧⇩ buttons will be displayed. If using an STVI controller the Control Knob icon will be displayed. Pressing either of these two will present the user with a window to select the desired level of increment for manually ramping the outputs, the desired channel(s) to be ramped, and what is to be adjusted (amplitude, phase angle or frequency).

3.3.2 Currents in Series Operation

Two current channels may be connected in series in order to double the available compliance voltage. High impedance electromechanical ground (earth) overcurrent relays have always been difficult to test at high multiples of tap due to the winding impedance and saturation characteristics. The peak voltage required can exceed the maximum output voltage of one SMRT36 current output channel, depending on the required test current. By connecting two current outputs in series, the compliance voltage is doubled, providing higher test currents through the load. There are two methods to series currents together. For the floating output (F) models connect the two current amplifiers in a "push-push" configuration as shown in the following figure.

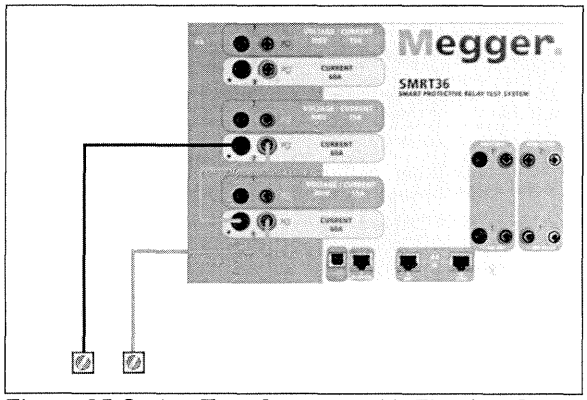

Figure 25 Series Two Currents with Floating Output Unit

The two current channels that are to be used in series set each to the same test current magnitude, and phase angle. Select both current channels and turn output on by pressing or clicking on the ALL ON/OFF button. Always use the ALL ON/OFF button to turn both current channels on and off together. For manually ramping outputs, if using the PC version of the STVI software the ⇧⇩ buttons will be displayed. If using an STVI controller the Control Knob icon will be displayed. Pressing either of these two will present the user with a window to select the desired level of increment for manually ramping the outputs, the desired channel(s) to be ramped, and what is to be adjusted (amplitude, phase angle or frequency).

To series the current channels of the common grounded returns (G) unit, perform the following:

Using the current channel test leads, connect the Red output terminals of the two current channels to the relay under test. Even though the two returns associated with the current channels are connected internally with the common returns, place a jumper as shown. This will insure that the internal common leads will not be damaged.

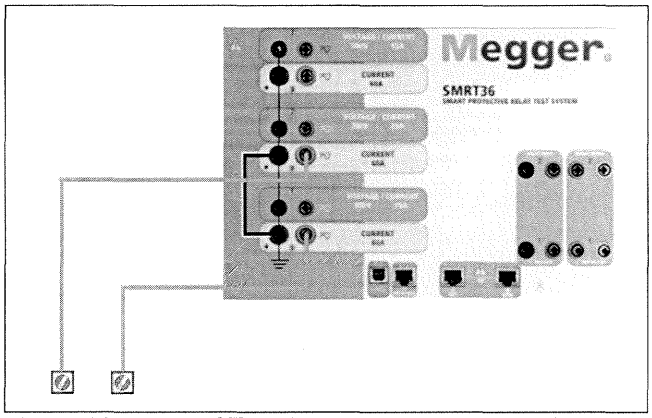

Figure 26 Series of Two Current Channels with Grounded Common Returns

NOTE: One current channel should be set to 0 degrees and the other current channel should be set to a phase angle of 180 degrees so that the two compliance voltages add across the load. DO NOT attempt to series more than two currents together on a grounded common returns unit.

The two current channels that are to be used in series set each to the same test current magnitude. Initiate the two current channels simultaneously by pressing the ALL ON/OFF button. Always use the ALL ON/OFF button to turn both current channels on and off together. For manually ramping outputs, if using the PC version of the STVI software the ⇧⇩ buttons will be displayed. If using an STVI controller the Control Knob icon will be displayed. Pressing either of these two will present the user with a window to select the desired level of increment for manually ramping the outputs, the desired channel(s) to be ramped, and what is to be adjusted (amplitude, phase angle or frequency).

3.4 **Voltage Sources**

3.4.1 Outputs Summed Together

Two voltage channels may be used to sum the voltage outputs to obtain higher than rated voltage provided the load is ungrounded. Connect the load between the voltage channel posts, set V_1 Phase to 0° and set V_2 Phase to 180°. The voltage outputs will add so the total voltage is the sum of the two voltage amplitudes, V_1 and V_2 as can be seen in the following diagram.

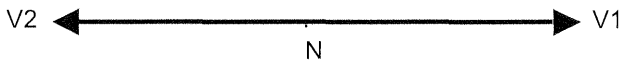

! Note: If an **F** or **C** appears in the 5th digit of the style identification number (i.e. 30P1**F**0A0S1) the voltage returns are floating (isolated from each other and ground). Those units with a style number **G** or **E** the voltage returns are common together internally and connected to earth ground.

For the floating common units the user must connect the associated voltage channels black common returns together, when series operation is required (see the following figures). Remove external commons when testing is completed. DO NOT attempt to series more than two voltage channels together.

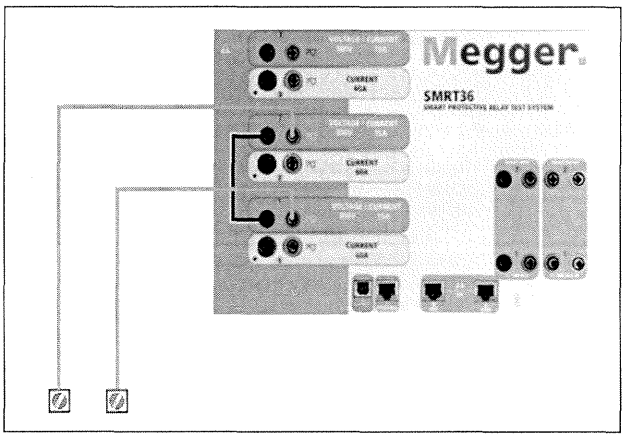

Figure 27 Series of Voltage Channels for Floating Ungrounded Common Returns

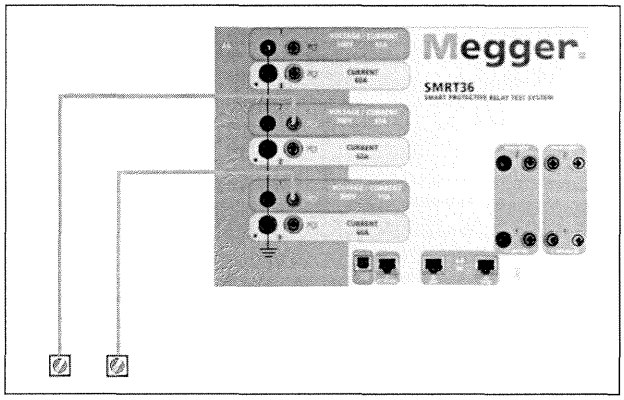

Figure 28 Series of Voltage Channels with Grounded Common Returns

3.4.2 3Ø, 3-Wire, Open-Delta and T-Connection

3.4.2.1 Balanced Open Delta

Two methods of obtaining a three-phase, three-wire voltage source are available. The Open-Delta configuration is the easier to use when a balanced three-phase source is required because the amplitude and phase relationship can be set directly. No calculations are necessary.

When using the Open-Delta configuration, it is suggested to use voltage channel #1, designated V_1, and voltage channel #2, designated V_2, while the COMMON binding post is designated V_g. With this arrangement, the magnitude and phase angle of the potentials can be easily calculated and set. For the balanced three-phase condition V_{1-g} and V_{2-g} are equal in magnitude and separated by an angle of 60°. This is done by setting the V_1 and V_2 potentials equal in magnitude, setting 0° on V_1 and 300° (60 degrees leading assuming that the default phase rotation is set to 360 Lag) on V_2, see the following figures.

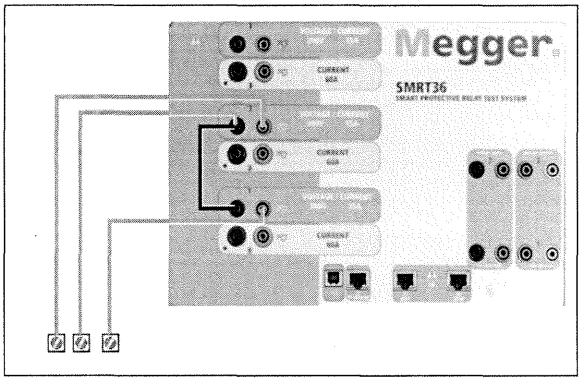

Figure 29 Three Phase Open Delta Connections

When using the Open-Delta Configuration to set up a phase-to-phase fault, calculations' using the Law of Cosines is required to calculate amplitude and phase relationships. (See discussion under T-Connection for simulating unbalanced, phase-to-phase faults without need for calculations.)

Balanced 3q - Open Delta Connection

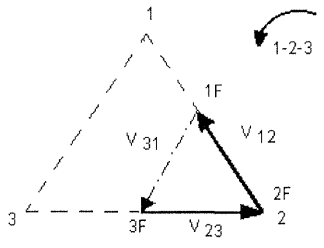

If V_f equals the desired test potential, then:

Set $V_1 = V_f \angle 0°$
Set $V_2 = V_f \angle 300°$

3.4.2.1.1 Unbalanced Open Delta

When setting up an Unbalanced Open-Delta configuration, the desired phase-to-phase fault voltage, V_{1f} is set using voltage channel #1 with its phase angle set to 0°. Phase-to-phase voltage V_{2f} and its phase angle relationship for voltage channel #2, must be calculated using the Law of Cosines; where For any triangle the following formula applies:

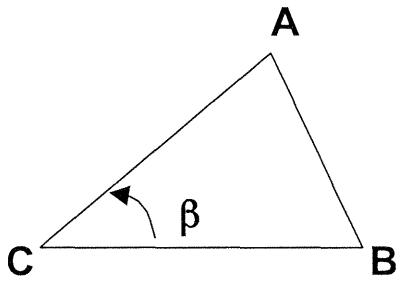

$$AB^2 = AC^2 + BC^2 - 2 \times AB \times BC \times \cos ß.$$

The next figure shows the phase relationships between voltages and an example of the necessary calculation. For convenience the amplitude and the phase angle settings for the typical V_f fault magnitudes are tabulated.

From the Law of Cosines

$$\theta = \arccos\left(\frac{V_{12}}{2 * V_{23}}\right)$$

$$V_{23}^2 = \left(\frac{V_{12}}{2}\right)^2 + \left(\frac{\sqrt{3}}{2} * 120\right)^2$$

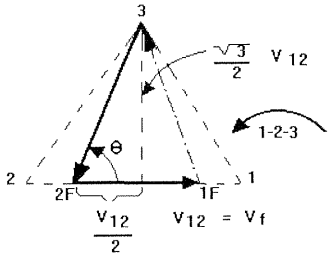

NORMAL BALANCED CONDITION
V 12 = V 31 = V 23

Figure 30 Open-Delta Unbalanced phase-to-phase Fault Voltages

Settings for Typical Phase-to-Phase Fault Voltages

$V_{12} = V_f$

V_{12}	1	5	10	15	20	25	30	35	40	45	50	55	60	65	70
V_{23}	104	104	104	104	104	105	105	105	106	106	106	108	108	109	110
At θ° Lag	270	271	273	274	275	277	278	280	281	282	284	285	286	287	289

3.4.2.2 T Connection

The second method of obtaining a three-phase, three-wire voltage source is the so-called T-Connection. The method, shown in the following figure, is easier to use when obtaining an unbalanced, phase-to-phase fault simulation since it eliminates calculations. To reduce confusion when using the T-Connection, the voltage output #1 is designated V_a and its phase angle set at 0°, voltage output #2 is designated V_b and its phase angle set for 180°, and voltage output #3 is designated V_c and its phase angle is set for 270. Any combination of balanced three phase faults or unbalanced phase-to-phase fault conditions can be easily simulated. The following figure indicates these phase relationships.

NOTE: This method should not be used for very low fault voltages, or used on solid state relays that may be sensitive to this type of connection (i.e. 5 volts or less, or for testing ABB or Westinghouse type SKD relays).

$$V_f = \textit{Desired Fault Voltage}$$

$$V_a = \frac{1}{2}V_f \angle 0°$$

$$V_b = \frac{1}{2}V_f \angle 180°$$

$$V_c = \frac{\sqrt{3}}{2}120 \text{ or } V_c = 104V \angle 270°$$

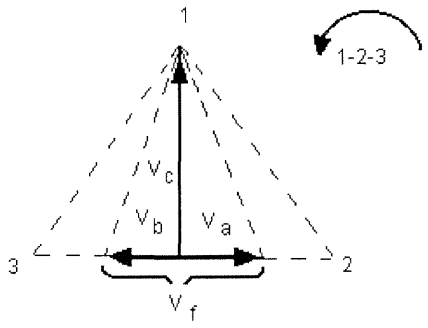

Balanced or Unbalanced Fault T-Connection

3.4.3 3Ø, 4-Wire, Y-Connection

A three-phase, four-wire potential system can be provided using three output modules. The vector relationships are referenced below. This Y-Connection has the advantage of being able to supply a higher line-to-line voltage (1.73 x phase-to-neutral voltage). It is ideally suited for simulating phase-to-ground faults. Voltage channel #1 is designated as V_a with its phase relationship set for 0°. Voltage channel #2 is then designated as V_b and phase angle set for 120°. Finally, voltage channel #3 is designated V_c and phase angle set for 240° (for a 1-2-3 counter clockwise rotation). V_a, V_b and V_c are connected to the voltage potential binding posts on the respective test sets.

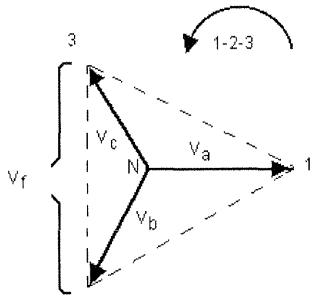

Balanced 3q, 4 Wire Y-Connection

$$V_f = Desired\ Fault\ Voltage$$

$$V_a = \frac{\sqrt{3}}{3} V_f \angle 0°$$

$$V_b = \frac{\sqrt{3}}{3} V_f \angle 120°$$

$$V_c = \frac{\sqrt{3}}{3} V_f \angle 240°$$

Note: If an **F** or **C** appears in the 5th digit of the style identification number (i.e. 30P1**F**0A0S1) the voltage returns are floating (isolated from each other and ground). Those units with a style number **G** or **E** the voltage returns are common together internally and connected to earth ground.

If using the sleeved multi-lead voltage test leads (part number 2001-395), all of the black return leads are interconnected together inside the sleeve so they will all share the return together. Therefore, only one return lead is provided on the relay connection side of the sleeved leads (similar to the connections in the following figure).

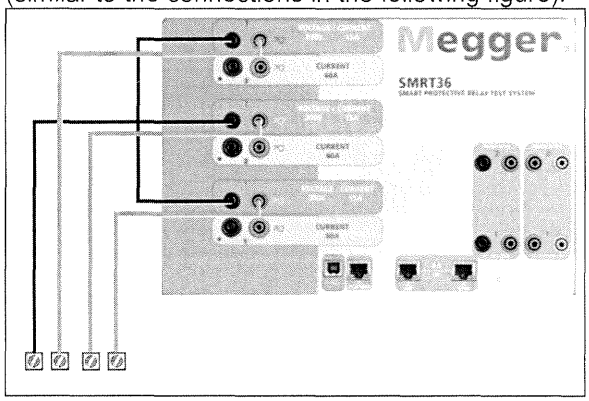

Figure 30 Three Phase Four Wire Test Connections

For the earth grounded common return (G) units, there is an internal common ground between the voltage and current channel return terminals. Therefore, only one return lead is required for

the voltage channels. If using separate individual test leads, for the floating common units the user must connect the associated voltage channels black common returns together as shown above.

3.5 Testing Relays with the STVI Manual Test Screen

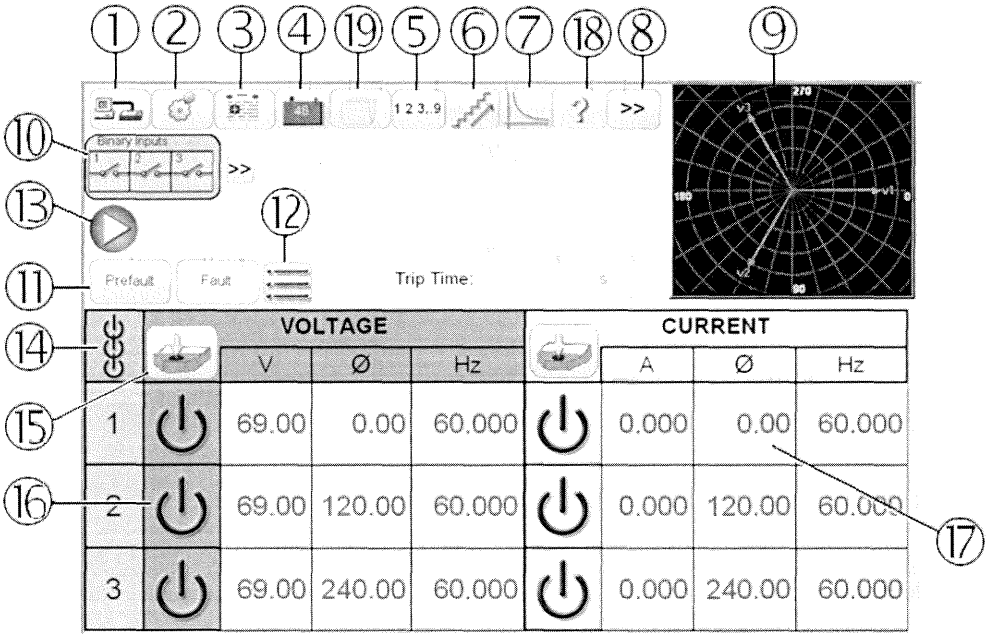

Figure 31 Manual Test Screen

The following tests are examples of how to use the STVI Manual Test Screen for general test applications.

3.5.1 Simple Manual Pickup or Dropout Test

1. Select the channel value(s) to be ramped by pressing the appropriate magnitude window(s) (17). Using the numeric keypad as shown in Figure 11, enter the starting value.
2. Connect the appropriate output terminal(s) for the selected channel(s) to be ramped.
3. Connect the desired Binary Input terminal to sense the relay contacts closing or opening. Select the Binary Input (10) and set the appropriate sensing Continuity or Voltage modes (see Figure 17A).
4. Press the Output Selector Adjustment icon (15), and enter the increment, channel number(s), and whether Amplitude, Phase and Frequency (see Figure 12). Note that the selected channel(s) should have a highlighted border around the magnitude window(s).
5. Select the output(s) to be turned on by pressing the ON/OFF icon button (16) for the selected channel(s). Upon pressing the ON/OFF button the center will turn green indicating that the channel has been selected to turn on. Turn the selected output(s) on by pressing All ON/OFF button (14). When the channel(s) turn on the channel window

turns green. Using either the Control Knob on the STVI, or the PC up and down arrows, manually ramp the output(s) until the relay contacts either picks up or drops out, depending on the start value entered in Step 1.

6. Turn the output(s) off by pressing the ON/OFF icon button(s), or press the ALL OFF icon button. By not pressing the ALL OFF button the channel(s) can be turned back on by pressing the channel ON/OFF button again. This provides the ability to toggle outputs on and off in order to observe contact movement at the pickup threshold.
7. Press the Add To Report button (3) if you would like to document this test in your report.

3.5.2 Simple Manual Timing Test

1. Press the Prefault button (11), and set the desired Prefault duration in seconds in the window provided (12).
2. Select the prefault channel(s) to be turned on by pressing the ON/OFF icon button(s) (16). Set the Prefault value(s) by pressing the appropriate magnitude window(s) (17), and using the numeric keypad as shown in Figure 11, enter the Prefault value(s).
3. Connect the appropriate output terminal(s) for the selected channel(s) to be used.
4. Connect the desired Binary Input terminal to sense the relay trip contacts.
5. Press the selected Binary Input (10). If the Binary Input is already set to **Use as Trip (enabled)**, select for the appropriate sensing Normally Open, Normally Closed, Voltage Applied, or Voltage Removed. If the Binary Input is set to monitor mode, Use as Trip (disabled), press or click on the button to change it to **Use as Trip (enabled)**, see Figure 17B, and select Input Type and Input Action as desired. If it is desired to turn the outputs off when the relay trips press the Auto Off (disabled) button and select the desired channels to turn off.
6. Press the Fault button, and set the desired fault value(s) by pressing the appropriate magnitude window(s) (17), and using the numeric keypad.
7. Press the Prefault button returning to the prefault settings. Turn the selected channels on by pressing the ALL ON/OFF (14). The prefault outputs should now be on. Press the Blue Play button (13). The Prefault countdown timer will start running. The outputs will change from prefault to fault value(s) and the timer will start running. When the relay trips, the Timer will stop indicating the trip time of the relay under test. Once the test has completed all outputs will be turned off if the auto off was enabled. If Auto Off was not enabled the user can input a Maximum Test Time or a Post Fault Time setting, see 3.1.13 Maximum Test Time/Prefault Time/Post Fault Time Settings button, and the outputs will automatically turn off as desired.
8. To save the test result, press the Add to Report button (3). The results have now been added to the report and the report is shown. Note that the values are not actually saved

to file until you press the File Folder icon and save them as previously defined. The user can now enter appropriate information relative to the test in the Test Report header.

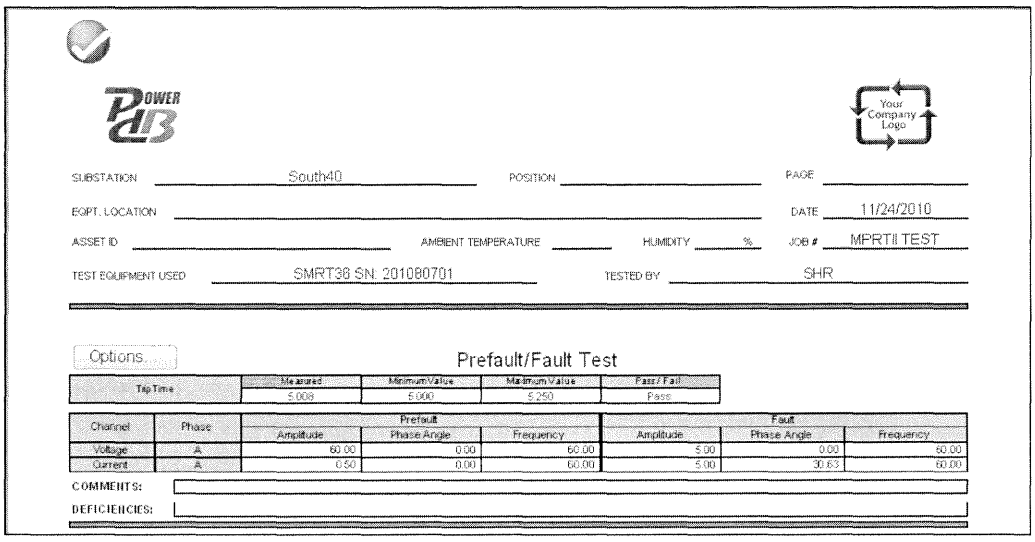

Figure 32 Example PowerDB Report

If using the STVI, use the **Control Knob** to scroll up and down to view all results. Note that there is a space in the upper right corner for company logos to provide a finished and professional look (see Configuration). Also note the Options button just above the recorded results. Pressing this button the user will be presented with a number of possible choices for the recorded results.

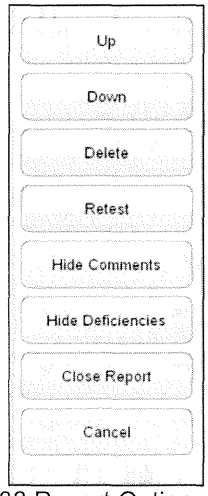

Figure 33 Report Options Screen

The results can be moved up or down to change the order of the results presentation. The result can be deleted, or a retest performed. In addition, the user can add or hide Comments or Deficiencies. Press either Close report to return to the test screen or press Cancel to return to the report. To exit the report, press the Check button in the top left corner or select the Options button followed by the 'Close Report' button.

3.5.3 Using Auto Ramp / Pulse Ramp / Pulse Ramp Binary Search

The Auto Ramp feature of the STVI software may be used to automatically determine pickup or dropout of various types of relays. Press the Ramp button (#6) icon to enter the Auto Ramp screen. The user will be presented with a message to select a channel to be ramped. Once a channel is selected to ramp the user must then choose which type of ramp (there are three to choose from) or select the Ramp Wizard. The Ramp Wizard automatically sets up the appropriate ramp for different types of applications (see Ramp Wizard for more information).

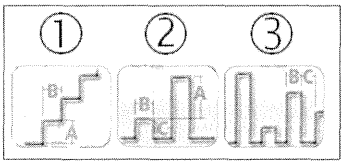

Figure 34 Ramp and Search Tool Bar

3.5.3.1 Step Ramp Example

The first selection ① is the Step Ramp and will ramp the output by applying a value and then waiting a specific amount of time before incrementing it. Depending on what is being ramped the user must define the Start and Stop values of the value being ramped. For example, to automatically ramp output current the user will select the channel to be ramped, input Start and Stop Amplitudes, an Increment (A), and a Delay time in Cycles (B). See the following figure.

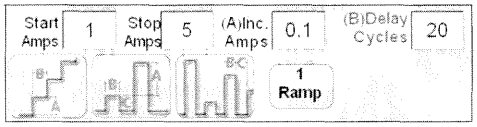

Figure 35 Step Ramp Setting Example

In the above example, 1 Amp was set to Start ramping, with the Stop value at 5 Amps (with the expectation that the relay will pick up before reaching 5 Amps), with an Increment of 0.1 Amps (A) and a Delay (B) time of 20 Cycles between each increment. To start the auto ramp push the blue Play button.

3.5.3.2 Pulse Ramp Example

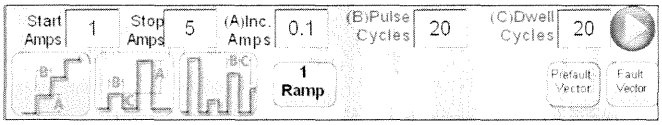

Figure 36 Pulse Ramp Setting Example

The second selection ② is for Pulse Ramp and will ramp the output but will also return to the prefault condition between each increment. The first step is to set the Prefault Vector(s) followed by setting the Start, Stop, and Increment values for the Pulse Ramp. Instead of Delay time the user sets the Pulse Cycles time, which is the time that the incremented value will be applied before going back to the prefault vector state. The output will then stay at the prefault values for the Dwell Cycles time before progressing to the next increment level until the relay operates. Press or click on the '1 Ramp' button. The user can select a 2nd, 3rd and 4th ramp. This allows the user to select the number of cascaded ramps to be performed. A common use for 2 ramps would be to set the increment level in large steps and then when the relay picks up reduce the output by a percentage of the pickup value. Ramping can then start from that point but at smaller

increments until the relay picks up again, thus providing a finer resolution on the actual pickup point. This feature is most used when doing instantaneous pickup tests. The output current, or voltage, can be incremented in large steps getting to the pickup point quickly. This reduces the test time, heating of the relay under test, and provides a very accurate test result. This feature is also used when testing multi zone distance relays using three phase voltage and currents. Set the Pulse Cycles duration just long enough for the intended zone to operate. If you are not sure exactly where the pickup value of the relay is you can use the Pulse Ramp Binary Search ③ feature.

3.5.3.3 Pulse Ramp Binary Search Example

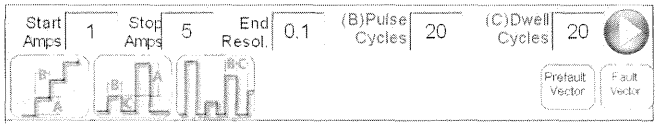

Figure 37 Pulse Ramp Binary Search Setting Example

The third selection ③ on the tool bar is Pulse Ramp Binary Search. The Pulse Ramp Binary Search is used to quickly determine the pickup value of a relay with a questionable or unknown set point or operating characteristic. More importantly, this feature is excellent for testing relays which require a prefault condition prior to sensing a fault condition. The setting values are almost the same as the Pulse Ramp. However, instead of Increment value, the user defines the End Resolution of the final search increment. On execution the control it will incrementally search for the relay pickup starting with Prefault Value(s). The operation is first checked slightly above the halfway point between the Start and Stop value settings. The first output will be the Prefault setting(s), then pulsing to the Fault value(s). If an operation by the relay occurs within the Pulse Time, the Fault value(s) output will automatically increment down by 50% of the difference between the last operate and no-operate point. Like Pulse Ramp, the output toggles back and forth between the Prefault and the next Fault value(s). The bi-directional pickup and non-pickup operation keeps dividing back and forth very quickly until the End Resolution is reached. Once the end resolution is reached the final pickup value(s) will be displayed. Where Prefault values are not required a simpler Binary Search could be used.

3.5.4 **Using Ramp Wizard**

Pressing the Ramp Wizard button presents the user with a selection of three different typical relay tests, and a Custom Ramp. A description of the selections follows.

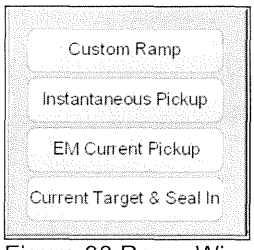

Figure 38 Ramp Wizard Relay Type Selection Menu

3.5.4.1 EM (Electromechanical) Current Pickup

Pressing the EM Current Ramp button will present the user with the following test screen.

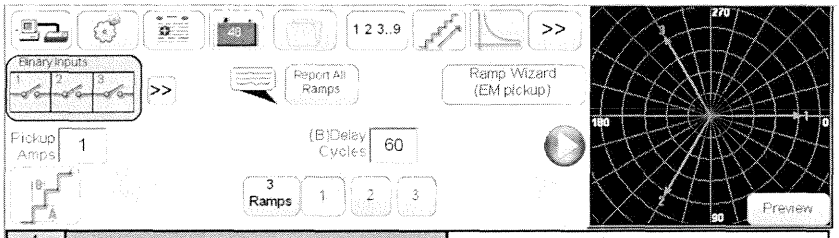

		VOLTAGE				CURRENT		
		V	Deg	Hz		A	Deg	Hz
1		69.00	0.00	60.000		0.000	0.00	60.000
2		69.00	120.00	60.000		0.000	120.00	60.000
3		69.00	240.00	60.000		0.000	240.00	60.000

Figure 39 EM Ramp Wizard

EM Current Pickup – This selection provides the user the appropriate type of ramp, and defaults necessary to do a pickup test on an electromechanical overcurrent relay. The wizard will default to three ramps. The basic operation of the test is that the test set will apply twice the **Pickup Amps** entered by the user and wait for the contacts to close. The test current will be dropped by a percentage (labeled the **Start %**) from the twice pickup value applied to the relay, and start ramping down in **Inc**rement **Amps**, set as a negative value like -0.05, using a **Delay Cycles** entered by the user. The Start % value needs to be a percentage of initial test current, so that the contacts will still be closed, but the current will not have to ramp down very far to get the contacts to open. When the contacts open, the current will then reverse and start ramping back up at a different increment until the relay trip contacts close again. The **Start %** point for the ramp back up is a % of where the contacts just opened. The user can set it to 100% thus the ramp back up will start at the same current value where the contacts just opened. The current will ramp back up at the **Inc**rement **Amps** setting for Ramp 3, using the same **Delay Cycles** set in Ramp 1. Use a smaller increment so that the resolution of the pickup will be much higher. At this point the Pickup value has been determined. There are two **Stop Amps** values that also need to be entered. The first **Stop Amps** associated with Ramp 2 is the lowest current value that the unit will ramp down to looking for the contacts to open. If they have not opened by this point, stop the test something is wrong with the relay. The second Stop Amps value is associated with Ramp 3. This is the maximum current that the unit will ramp up to. If the relay has not operated by this value the test will stop. Normally this value is set to a value 10% higher than the expected pickup value. For Reporting purposes the STVI will capture the pickup value and enter it into the report. For even more comprehensive results the user can press or click on the Report All Ramps button and the STVI will record where the contacts first closed, dropped on, and the final close for pickup. Press or click on the **Preview button** in the Vector Display and a graphical display will show how the test values will be applied.

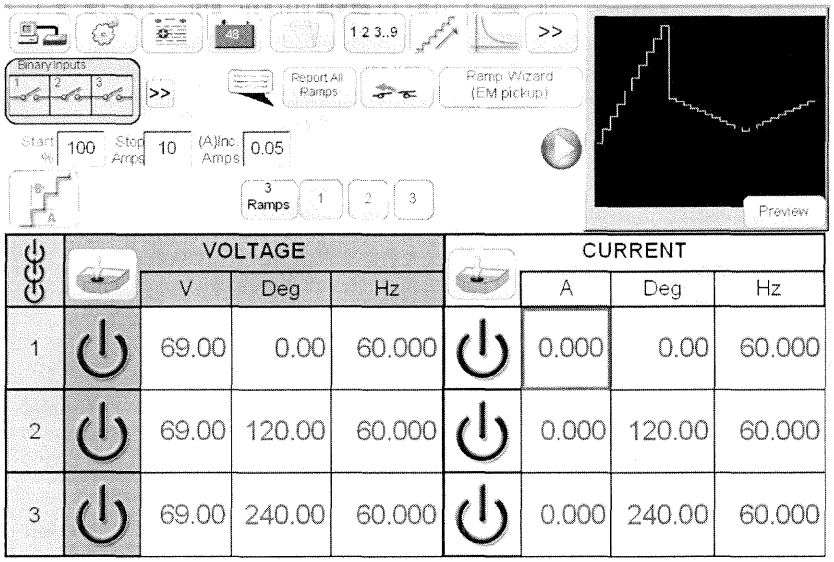

	VOLTAGE			CURRENT		
	V	Deg	Hz	A	Deg	Hz
1	69.00	0.00	60.000	0.000	0.00	60.000
2	69.00	120.00	60.000	0.000	120.00	60.000
3	69.00	240.00	60.000	0.000	240.00	60.000

Figure 40 EM Ramp Preview Screen

3.5.4.1 Instantaneous Pickup

Pressing the Instantaneous Pickup button will present the user with the following test screen.

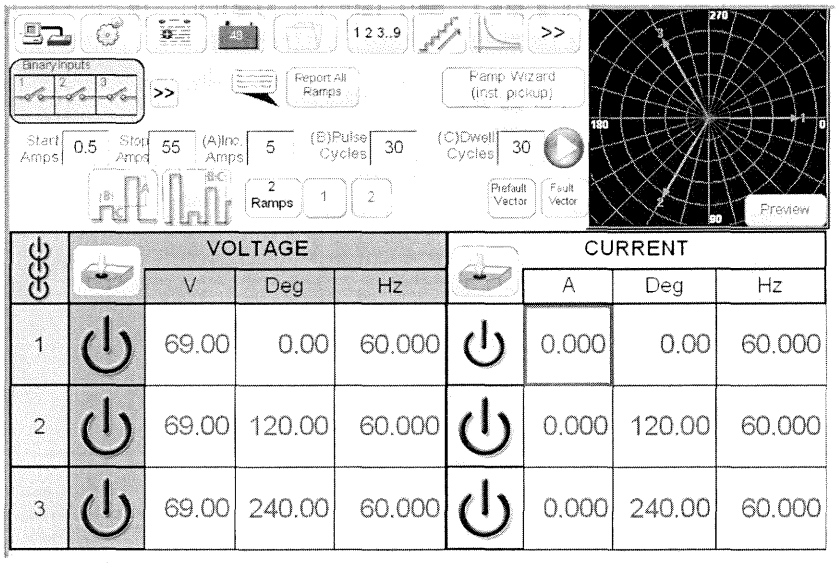

	VOLTAGE			CURRENT		
	V	Deg	Hz	A	Deg	Hz
1	69.00	0.00	60.000	0.000	0.00	60.000
2	69.00	120.00	60.000	0.000	120.00	60.000
3	69.00	240.00	60.000	0.000	240.00	60.000

Figure 41 Instantaneous Pickup Wizard

Instantaneous Pickup – This selection provides the user the appropriate type of ramp, and defaults necessary to do a pickup test on an electromechanical instantaneous overcurrent type relay. The wizard will provide two ramps. The user may select from two different styles of ramp (Pulse Ramp and Pulse Ramp Binary Search). See descriptions above for these ramp styles.

3.5.4.1 Current Target & Seal In

Pressing the Current Target & Seal In button will present the user with the following test screen.

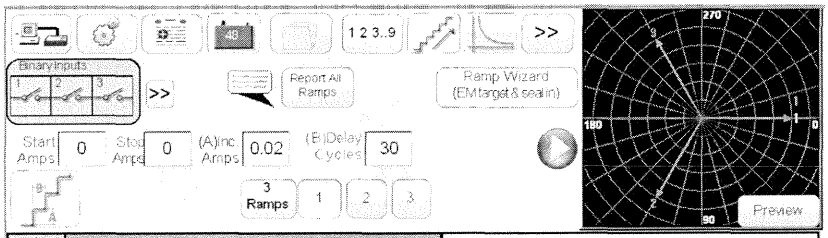

	VOLTAGE			CURRENT		
	V	Deg	Hz	A	Deg	Hz
1	69.00	0.00	60.000	10.00	0.00	60.000
2	69.00	120.00	60.000	0.000	0.00	0.000
3	69.00	240.00	60.000	0.000	240.00	60.000

Figure 42 Current Target & Seal Wizard

Current Target & Seal In – This selection provides the user the appropriate outputs and type of ramps necessary to do a pickup and dropout test on an electromechanical overcurrent DC Target and Seal In relay. The wizard will automatically pick two current channels. Channel #1 will provide the AC current necessary to cause the EM trip contacts to close. Current channel #2 will provide the DC current (note the Frequency is set to 0 for DC output) for the DC target element. For the Step Ramp enter the Start, and Stop values based upon the target element tap setting (typically 0.2, or 2 A DC). The default is 0.15 Amps for the 0.2 Amp tap setting relay. Set the Delay time long enough so that the user will have time to press the SIM button when the contacts close and press again when the contacts open. Application Note: It is difficult to monitor the seal in contacts, therefore, it is up to the user to observe the contacts and press the SIM button when the seal in contacts close or open. Also note that Ramp 2 ramps the current down with a default setting of -0.02 amps. If the tap setting is 2 Amps, it is recommended that the user change the increment to -0.05 amps.

3.5.5 Ramping Battery Simulator Output

1. On the STVI display screen press the Manual Ramp Options button. In Channel Increment Selection Screen press or click on the Battery button. Select the desired increment level of the Battery Simulator, 1 or 5 volt increments. Press on the green check button.
2. Upon returning to the main test screen, note the Battery Simulator will be set for the value setting in the configuration screen. If another starting value is desired, go to the configuration screen and enter the starting value in the window provided, and press the green check button. For manual ramping press the All ON/OFF button, note button turns green.

3. Press the battery button and note that it changes to red indicating that the battery output is on, and it will have a yellow arrow through the box with the dc starting value to be ramped. Use the control knob (pc version use the cursor up down arrows) to vary the dc voltage output (clock wise increases the output). One click will equal the increment setting. To turn the battery simulator off, press the battery button. Note: If you have completed the test press the All ON/OFF button. Once the All ON/OFF button is off, the battery simulator can be turned on and off by pressing the battery button, but it cannot be varied.

3.5.6 **Timing Test**

Pressing the timing button icon on the top menu bar takes the user to the **Timing Test Screen**. Timing tests are provided for a wide variety of protective relays, including Overcurrent, Voltage, and Frequency relays. This includes time curves and time curve algorithms for hundreds of different specific relays selectable by manufacturer, model number, and curve shape (inverse, very inverse, definite time etc.). In addition it also includes IEEE and IEC Standard time curve algorithms.

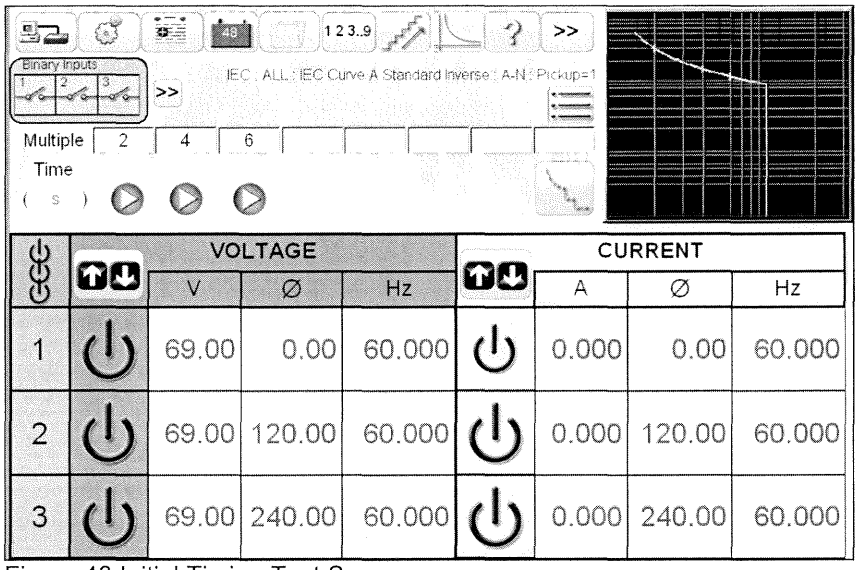

Figure 43 Initial Timing Test Screen

3.5.6.1 Timing Test Setup

Press the Setup and Settings button. The user will be presented with the **Timing Test Setup Screen** where the user can select the type of relay to be tested.

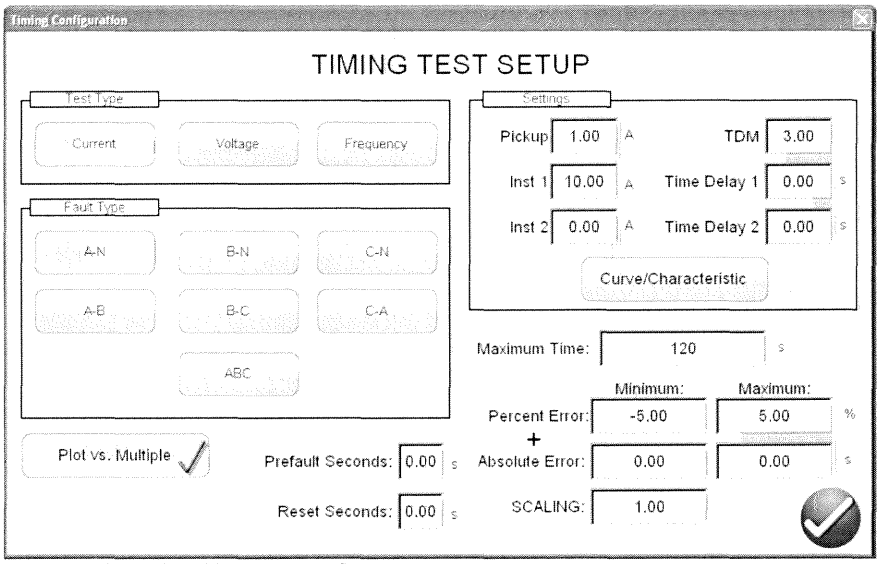

Figure 44 Timing Test Setup Screen

Test Type – Select a **Current**, **Voltage** or **Frequency** relay.

Fault Type – Select which phase is to be tested. Application Note: If you are testing a three phase relay, you can connect all three phases and individually test each phase one at a time by selecting the individual phase from this setup screen. The tests will be recorded for each phase as they are completed. Selecting three phase (**ABC**) will apply three phase current to the relay.

Settings – Enter the setting values of the relay to be tested.

Pickup equals **Tap** value for most electromechanical relays.

TDM stands for Timer Dial Multiplier, which is the same as the **Time Dial** for most electromechanical relays.

Inst 1 is the instantaneous trip value.

Time Delay 1 is the maximum operating time or the programmed delay time of the instantaneous trip 1.

Maximum Time is the maximum time allowed for the relay to operate. If the relay has not operated by this setting value, the test will automatically abort.

Prefault Seconds is the time that a prefault state will be applied to the relay before applying the fault value (used primarily when testing voltage and frequency induction disk relays).

Reset Seconds is the programmed reset time or the time required for the induction disk relay to reset. If this value is non-zero, pressing the first play button will not only test the first point, but will test all subsequent points with a delay of Reset Seconds between tests.

Percent Error and **+ Absolute Error** allow the user to define what the maximum and minimum allowable error that will be used for comparison to the theoretical in the test report for pass and fail criteria. **Absolute Error** is typical when testing frequency relays, where the operating time is a total of % of setting ± Cycles or Seconds. The value entered is in seconds. If the relay has a ± 3

Cycles of absolute error, the user will need to convert the time into seconds and enter that value.

Application note: For some frequency relays the "± Cycles" is based upon the ***fault frequency*** applied to the relay, not the system frequency. The user must convert the fault frequency Cycles to seconds to enter the absolute error value.

3.5.6.2 Relay Manufacturer and Curve Selection

Pressing the **Curve / Characteristic** button for **Overcurrent** will provide the following menu selection screen.

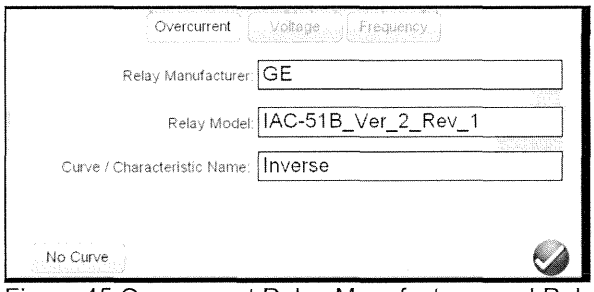

Figure 45 Overcurrent Relay Manufacturer and Relay Curve Selection

Relay Manufacturer – Touch or click on the window and the user will be presented with a pull-down list of various overcurrent relay manufacturers, or select IEC / IEEE time curves.
Relay Model – Touch or click in the window and the user will be presented with a pull-down list of various models of relays from the Manufacturer for which there are time curves programmed into the STVI software. If a particular relay is not present in the listing, it means that the manufacturers' time curve is not available, or it may be a new relay which has not been programmed into the STVI software yet. Check the Megger website for a possible STVI upgrade download. New STVI upgrades are available from time to time, which may include new time curves or time curve algorithms. Check with you local Megger sales office or representative for more information. If a specific curve is not available, consider using one of the IEC or IEEE Time Curve algorithms. New microprocessor based relays closely follow the IEC and IEEE time curve algorithms, and thus these standard curves maybe used for your test requirements.
Curve / Characteristic Name – Depending on the model relay selected the curve type maybe automatically selected and displayed. In the case of the IEC or IEEE time curves a curve type must be selected in this window. If there is No Curve for the relay test points may be defined by checking the No Curve button.
No Curve – Timing Configuration Window – By clicking on the No Curve button the user will be see a Timing Configuration table where the appropriate Test Multiple can be entered along with the appropriate trip time in seconds, see the following.

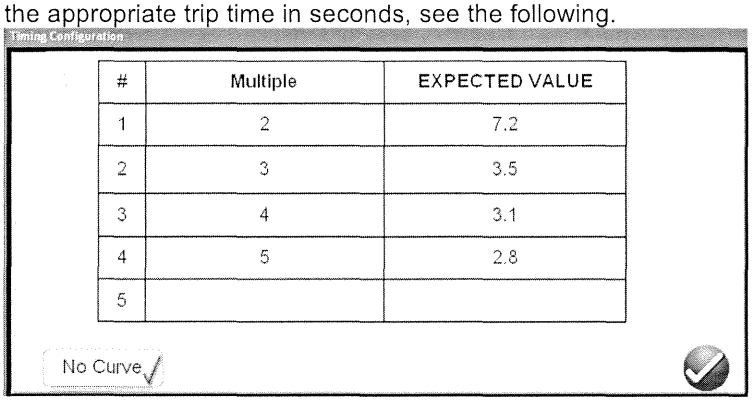

Figure 46 No Curve Timing Configuration Setting Screen

Up to 5 test points may be defined. When tests are conducted the cross hatch indicating the min and max acceptance limits and actual test points might appear something like the following.

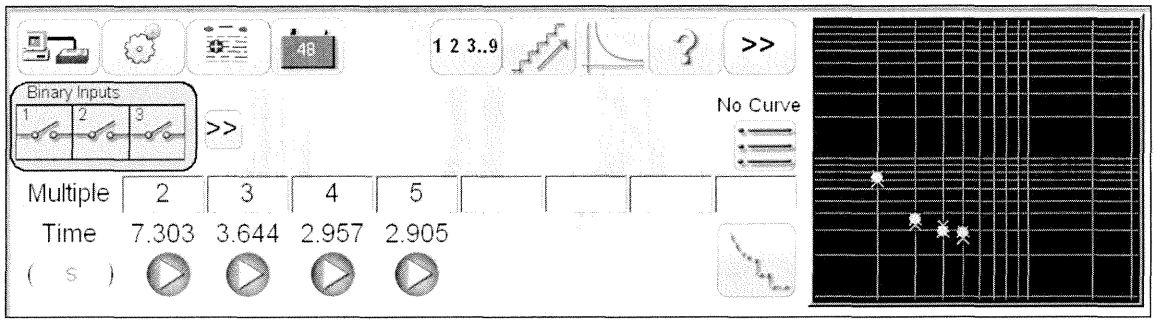

Figure 47 Sample Test Result for No Curve Trip Settings

Time Dial / Time Multiplier- Enter the Time Dial or Time Multiplier setting from the relay under test. This value will be used when calculating the theoretical operating time of the relay in the Timing Test Screen.

Press the green check button to return to the Setup Screen. Return to the test screen by pressing the green check button. Upon returning to the Timing Test Screen, the selected relay time curve will now appear in the upper right display.

3.5.7 Timing Test – Overcurrent Relays

Tests should be conducted in accordance with the manufacturers relay specifications. Following the Timing Test setup described in 3.5.6, returning to the Timing Test Screen the user will see something similar to the following figure.

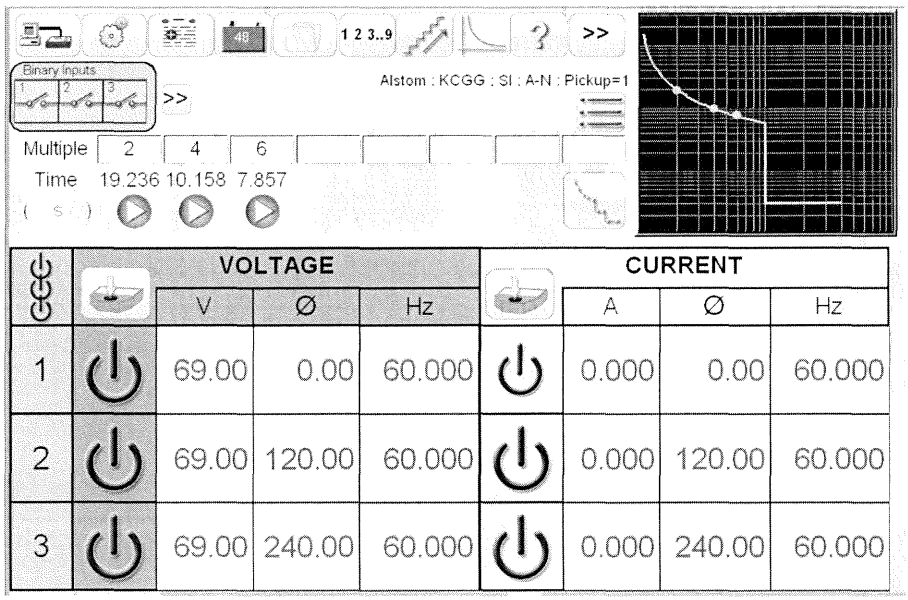

	VOLTAGE			CURRENT		
	V	Ø	Hz	A	Ø	Hz
1	69.00	0.00	60.000	0.000	0.00	60.000
2	69.00	120.00	60.000	0.000	120.00	60.000
3	69.00	240.00	60.000	0.000	240.00	60.000

Figure 48 Example Timing Test Results - Alstom KCGG Very Inverse Time Curve

Multiple – This is the multiple of the Pickup or Tap value that will be applied to the relay under test. The user is free to change the values to any desired multiple(s). Up to 5 test points maybe defined.

Timing Test

1. Press the Timing icon, and select the desired overcurrent relay in the Setup Screen. Enter the settings as described above in section 3.5.7.
2. If required, set the Prefault value(s) by pressing the appropriate magnitude window(s), and using the numeric keypad, enter the Prefault value(s). Connect the appropriate output terminal(s) for the selected channel(s) to be used. Select the Prefault channel(s) by pressing the ON/OFF icon button(s), and turn the outputs ON by pressing the All ON/OFF button.
3. Connect the desired Binary Input terminal to sense the relay trip contacts. Press the selected Binary Input. If the Binary Input is already set to **Use as Trip (enabled)**, select for the appropriate sensing Normally Open, Normally Closed, Voltage Applied, or Voltage Removed. If the Binary Input is set to monitor mode, Use as Trip (disabled), press or click on the button to change it to **Use as Trip (enabled)**, see Figure 17B, and select Input Type and Input Action as desired. If it is desired to turn the outputs off when the relay trips press the Auto Off (disabled) button and select the desired channels to turn off.
4. Press the Play button under the desired test Multiple. The Fault value(s) will be applied. When the relay trips, the Timer will stop indicating the trip time directly under the test Multiple. If the Reset Time is not zero, pressing the first play button will execute each of the test multiples in order with the Reset Time between each test. Selecting Test Multiples 2 through 8 will execute only the test multiple selected or set.

To View the test result, press the Add to Reports button. The user can now enter appropriate information relative to the test in the Test Report header.

3.5.8 Timing Test - Voltage Relays

Tests should be conducted in accordance with the manufacturers relay specifications. Following the Timing Test setup described in 3.5.6, returning to the Timing Test Screen the user will see something similar to the following figure.

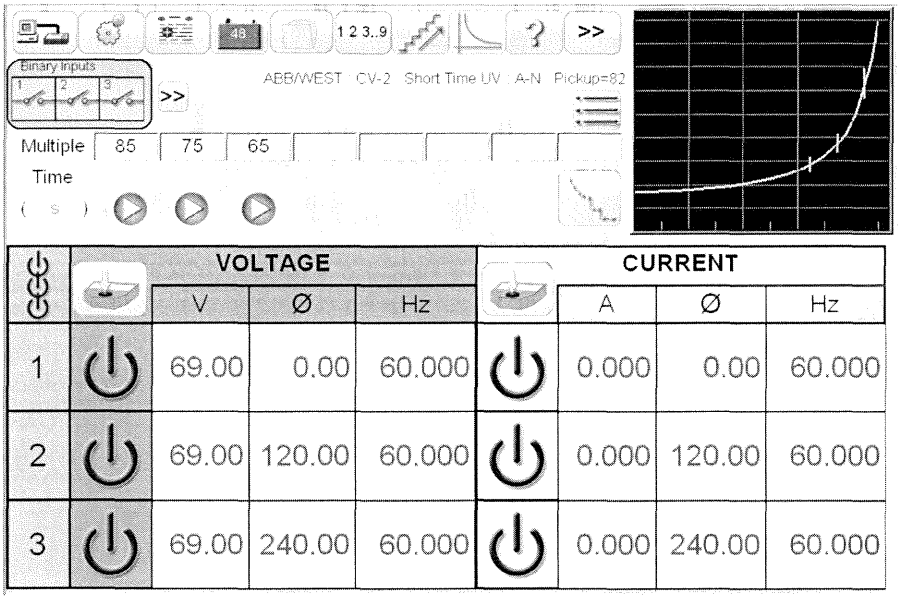

Figure 49 Example Voltage Timing Test – ABB/Westinghouse CV-2 Under Voltage Relay

Note: The STVI will automatically set the output frequency to the frequency set in the Configuration screen. If required change the frequency in the test screen.

Multiple – This is the multiple of the Pickup or Tap value that will be applied to the relay under test. The user is free to change the values to any desired multiple. For Under Voltage relays the Test Multiple is in percent less of the Pickup or Tap value, i.e. 85%. For Over Voltage relays the Multiple is greater than Tap, i.e. 110%.

Timing Test

1. Press the Timing icon, and select the desired voltage relay in the Setup Screen. Enter the settings as described above in section 3.5.7.
2. For voltage relays set the rated voltage to the relay by pressing the appropriate magnitude window, and using the numeric keypad, enter the value, i.e. 120 Volts. Connect the appropriate output terminal for the selected channel to be used. Select the voltage channel by pressing the ON/OFF icon button, and turn the outputs ON by pressing the All ON/OFF button. With rated voltage now being applied to the relay the trip contacts will open and the relay will be in the normal prefault mode, see Figure 52 for an example.
3. Connect the desired Binary Input terminal to sense the relay trip contacts. Press the selected Binary Input. If the Binary Input is already set to **Use as Trip (enabled)**, select for the appropriate sensing Normally Open, Normally Closed, Voltage Applied, or Voltage Removed. If the Binary Input is set to monitor mode, Use as Trip (disabled), press or click on the button to change it to **Use as Trip (enabled)**, see Figure 17B, and select Input

Type and Input Action as desired. If it is desired to turn the outputs off when the relay trips press the Auto Off (disabled) button and select the desired channels to turn off.

4. Press the Play button under the desired test Multiple. The Fault value will be applied. When the relay trips, the Timer will stop indicating the trip time directly under the test Multiple. If the Reset Time is not zero, pressing the first play button will execute each of the test multiples in order with the Reset Time between each test. Selecting Test Multiples 2 through 8 will execute only the test multiple selected.

To View the test result, press the Add to Reports button. The user can now enter appropriate information relative to the test in the Test Report header.

3.5.9 State Sequence Timing Test – Multi-Shot Reclose Relays

These tests should be conducted in accordance with the manufacturers relay specifications. Pressing this icon button on the top menu bar takes the user to the Sequence Timing Test Screen defined in the following screen.

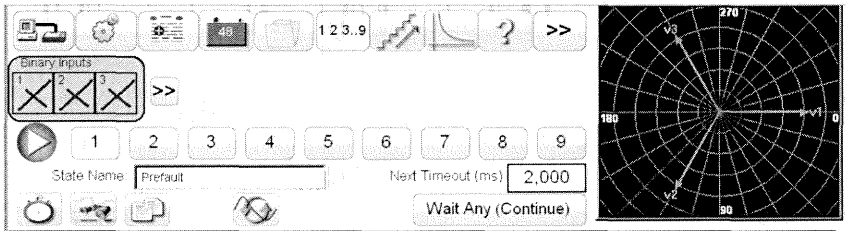

		VOLTAGE				CURRENT		
		V	Ø	Hz		A	Ø	Hz
1		69.00	0.00	60.000		0.000	0.00	60.000
2		69.00	120.00	60.000		0.000	120.00	60.000
3		69.00	240.00	60.000		0.000	240.00	60.000

Figure 50 Sequence Test Screen

There are 9 programmable steps available in the Sequence Test Screen. By default, the 9 states are already labeled as *Prefault*, *Trip1*, *Reclose 1*, etc. up to *Lockout* in step 9. It is initially setup for a four shot trip, reclose to lockout scenario. The user is free to change the labels, or use the default labels. With each state the user may input values of voltage, current, phase angle, frequency and set the binaryinput sensing for each state. Both single pole and three pole trip can be simulated. There are default values and binary settings for a single phase trip and reclose scenario already programmed in. The user can either use the defaults or change them to suit the application. Press the **Timers** button to view the **Timers Settings** and Labels. In addition the user can view and set where each timer starts and stops in association with each trip and reclose operation (see the following figure).

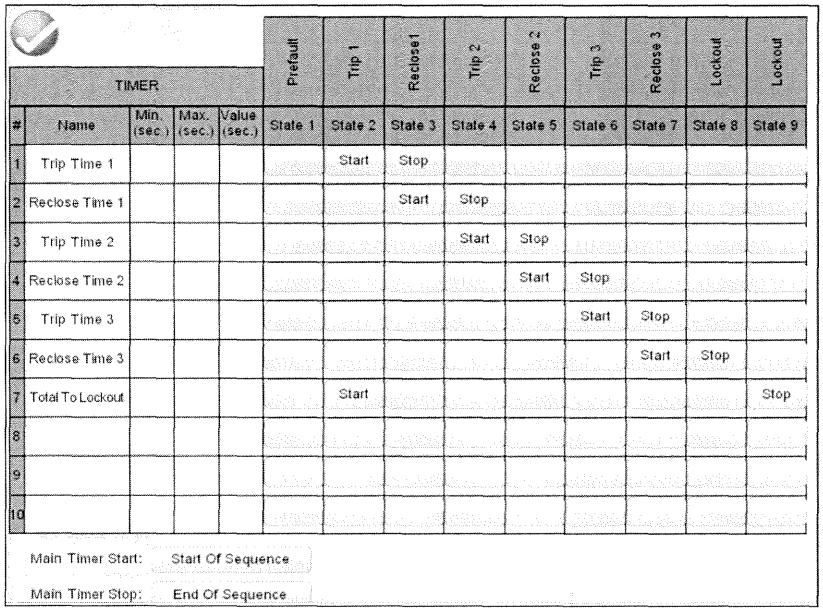

TIMER					Prefault	Trip 1	Reclose1	Trip 2	Reclose 2	Trip 3	Reclose 3	Lockout	Lockout
#	Name	Min. (sec.)	Max. (sec.)	Value (sec.)	State 1	State 2	State 3	State 4	State 5	State 6	State 7	State 8	State 9
1	Trip Time 1					Start	Stop						
2	Reclose Time 1						Start	Stop					
3	Trip Time 2							Start	Stop				
4	Reclose Time 2								Start	Stop			
5	Trip Time 3									Start	Stop		
6	Reclose Time 3										Start	Stop	
7	Total To Lockout					Start							Stop
8													
9													
10													

Main Timer Start: Start Of Sequence

Main Timer Stop: End Of Sequence

Figure 51 Sequence Timers Settings and Labels Screen

Note that the Total Time to Lockout is also included in the setting and indicates where the total timer starts and stops. This allows for 1, 2, 3, or 4 shots to lockout including reclose times. Return to the Sequence test screen, to set the conditions for each change of state. Press the **Wait Any** button directly under the Timeout window. The user will be presented with several selections to choose from. These are the conditions that the unit will take in order to determine when to change to the next state, see the following menu selection.

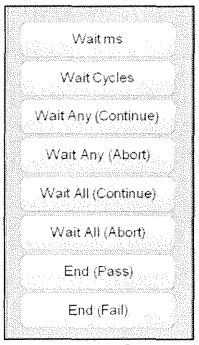

Figure 52 State Sequence Conditional Setting Screen

Figure 52

Wait ms – The unit will wait the milliseconds entered in the window before changing to the next state in the sequence.

Wait Cycles – The unit will wait the Cycles entered in the window before changing to the next state in the sequence.

Wait Any (Continue) – Wait for any of the configured binary inputs to be true and then continue with the sequence. Note that an input can be configured for the Wait Any (OR) and Wait All (AND) conditions be clicking on the binary inputs.

Wait Any (Abort) – The unit will wait for any of the configured binary inputs to be true, and then continue with the sequence. If no binary inputs become true before the **Timeout** setting value, the test will be aborted. Note that the timeout feature is only available for SMRT test sets (not available on MPRT units).

Wait All (Continue) – Wait for all selected binary input conditions to become true, or the Timeout is exceeded before continuing to the next state.

Wait All (Abort) – Wait for all selected binary input conditions to become true, or the Timeout is exceeded before continuing to the next state. If all selected binary inputs have not become true by the **Timeout** setting value, abort the test.

End – If the relay under test makes it to this state, end the test.

To set the Binary Outputs to simulate the 52a and/or 52b contacts press the Binary more >> button next to the Binary Inputs to expand the selection window. In the prefault state you may choose to have Binary Output 1 contact in the closed condition to simulate breaker closed. Click on Binary Output 1 and the binary output setting window will appear. The default setting is Open. Click on the Close Contact Button to simulate breaker closed. Note the Name in the window is defaulted to 1. The user is free to rename it to any value such as 52a. To rename the binary inputs or outputs, press or click in the Name window, and the virtual keyboard will appear. Up to 6 characters will appear in the binary window in the test screen. Press or click on the green check button to return to the test screen.

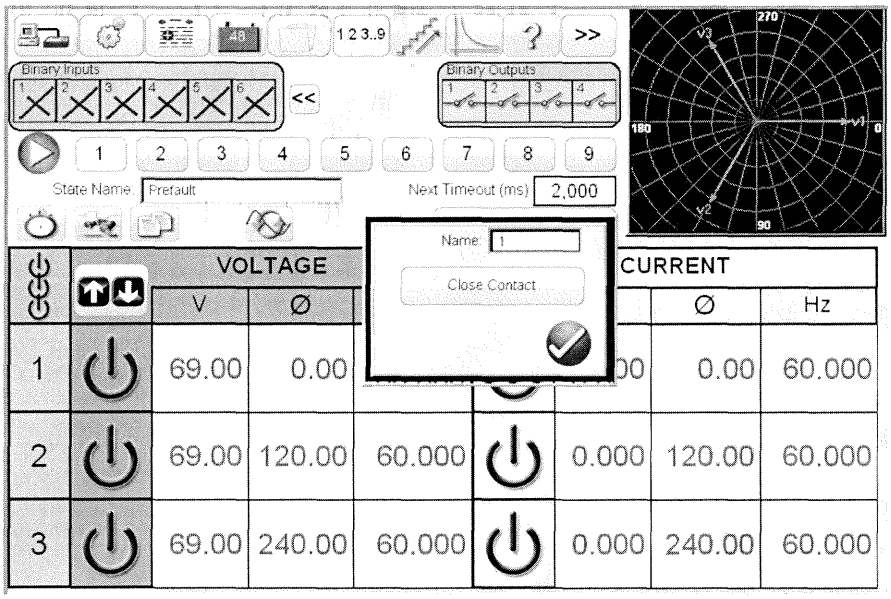

Figure 53 Binary Output Setting Screen

Once all of the Binary Inputs, Outputs, Prefault, Fault and Reclose settings are completed, the user can then press the Preview button to get a visual representation of the voltage and current outputs, as well as a visual of the binary inputs and outputs for each stage of the simulation. The following figure illustrates the default sequence.

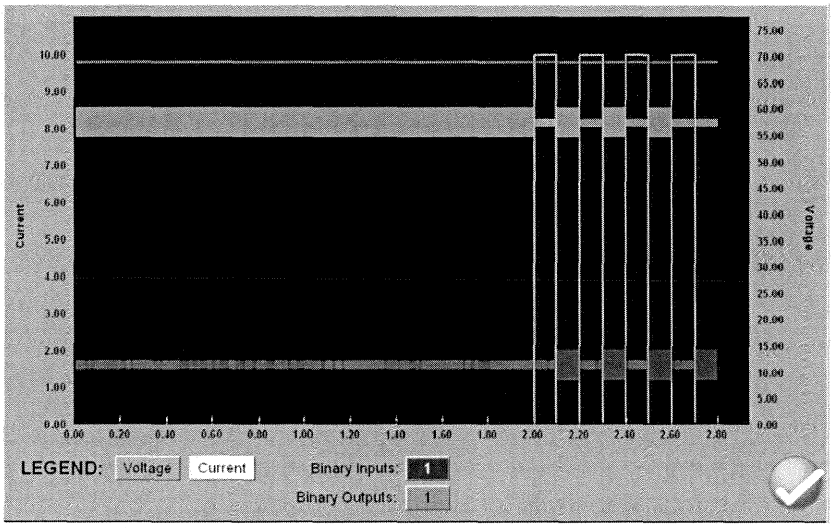

Figure 54 State Sequence Preview Screen

The yellow color is the magnitude of the output current; the red is the magnitude of the voltage output. The voltage and current values are graphed as RMS values. The fat/thin lines represent the binary inputs and outputs per the colors defined in the legend. A "fat" line indicates contacts are closed, and a thin line indicates that the contacts are open. When the fault current is applied, you can see when the trip contacts closed and when the binary output contact opened. When the "breaker" opens you can see the current going to zero. When the breaker closes you see the current being reapplied and then repeat the trip and reclose cycle until lockout. To exit this screen, press the green check button to return to the State Sequence screen.

To execute the test press the Blue play button. Save and review test results as previously discussed.

3.6 Testing Impedance Relays with the STVI Click On Fault

The STVI Impedance Relay Click On Fault (CoF) provides a quick approach to testing an impedance relay.

To access the STVI Impedance Relay Click On Fault press the >> more button next to the ? Help button, and then press the Impedance Relay button. Select either the Generic Characteristics relay Generic Characteristics button, or the Relay Library Button. Pressing the Generic button will provide a library of generic impedance relay characteristics to choose from. Pressing the Relay Library will provide a library of relay specific characteristics by various manufacturers.

3.6.1 Common Settings

The following settings are common to both Generic and Relay Specific from the Relay Library.

3.6.1.1 Tolerance Settings

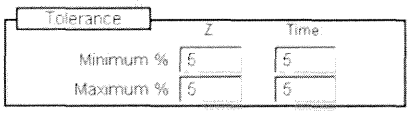

Figure 55 Tolerance Settings Dialog Box

Enter Maximum and Minimum Percentages for Pass / Fail evaluation of the test results. Z = % of Impedance in Ohms, and Time values are in % of Expected Trip Time setting. When performing pickup tests using Pulse Ramp if a time is entered into the Expected Trip Time window the software will record the trip time as well as the pickup value.

3.6.1.2 Expected Trip Time Settings

Enter expected trip time for each Zone of operation. Settings are defaulted in milliseconds. To change to Cycles click on the ms and it will change to cy for Cycles. When conducting reach tests the software will capture the operating time of the pickup and compare to the expected trip time and provide pass/fail indication.

3.6.1.3 Direction / OFF Setting Button

The default setting is in the forward direction. Pressing the button will present the user with three selections, OFF, FORWARD, and REVERSE. Selecting REVERSE with flip the operating characteristic over in the reverse direction.

3.6.1.4 Zones/Fault Selection Box

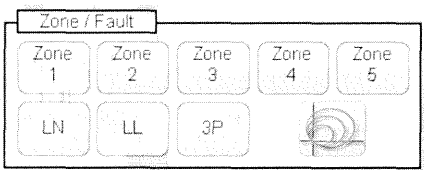

Figure 56 Zone and Fault Type Selection Dialog Box

The user can select which Zone they wish to define, with up to 5 Zones selectable. When more than one Zone is defined; to view multiple zones all in the same graphic window press the multi-zone display button. When you go to the test window, all defined zones will appear in the test window. When pressing the icon the background color will change and you will see the multiple zones displayed in the impedance plane display. Touch the window again and it will return to single zone display format. The user can define **LL** Phase to Phase fault, **3P** 3 Phase Fault, or **LN** Phase to Ground fault.
Application Note: To save time enter the reach and angle settings once, then use the Copy State

button, then select one of the other fault types and press the Paste State button and all of the values entered for the previous fault type will be entered for the other fault type. Note this should be limited to only same zone fault types. Selecting **LN** phase to ground will provide an additional button just to right of the Fault selection box to enter the appropriate Ground Compensation factors, see Ground Compensation Settings.

3.6.1.5 **Ground Compensation Settings**

In the Generic screen there are two types of compensation factors to choose from, KN and Z0Z1. Press the Ground Compensation button and the following settings window will appear.

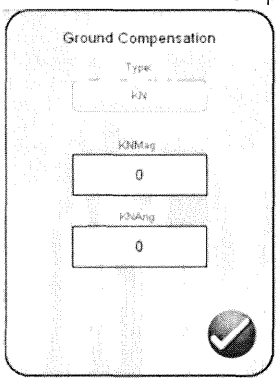

Figure 57 Ground Compensation Settings Dialog Box

The default screen is for KN. To enter Z0Z1 values press the KN button. Where the compensation factors are part of the relay settings the Compensation button will not be provided, but the values will be calculated based upon the settings. Enter the appropriate magnitude and angle for the appropriate compensation value, and the software will calculate the appropriate test values in the test window.

3.6.1.6 **CT PT Ratios**

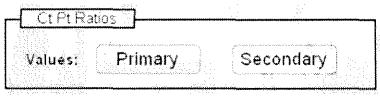

These buttons control the scaling in the impedance graph, and are associated with the CT and PT values entered in the Click On Fault Test Screen. Select either Primary or Secondary and the ohmic values will change in the impedance graph.

3.6.2 **Generic Characteristics**

Pressing the Generic Characteristics button will provide three options, MHO, Half MHO and QUAD (Quadrilateral).

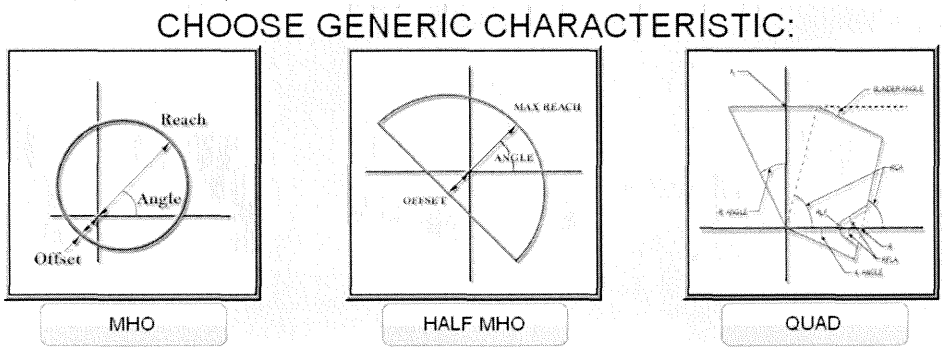

Selection of the MHO will provide the Generic MHO Setting Screen.

3.6.2.1 **MHO Setting Screen**

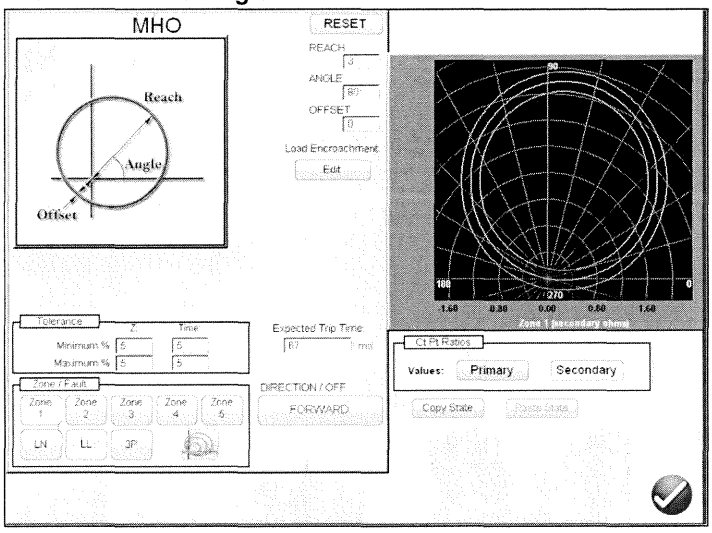

Figure 58 Generic MHO Setting Screen

There are three basic settings, REACH, ANGLE, and OFFSET that will define the relay operating characteristic. REACH is a value in Ohms. ANGLE is a value in degrees normally associated with the maximum torque angle, line, or characteristic angle setting of the relay. OFFSET is a value in Ohms indicating either positive or negative offset. Pressing the Load Encroachment Edit button will reveal the Load Encroachment settings screen.

3.6.2.1.1 **MHO Load Encroachment Setting Screen**

For relays with Load Encroachment characteristics in the longer reaching zones of operation, pressing the Load Encroachment Edit button will reveal the following settings dialog box.

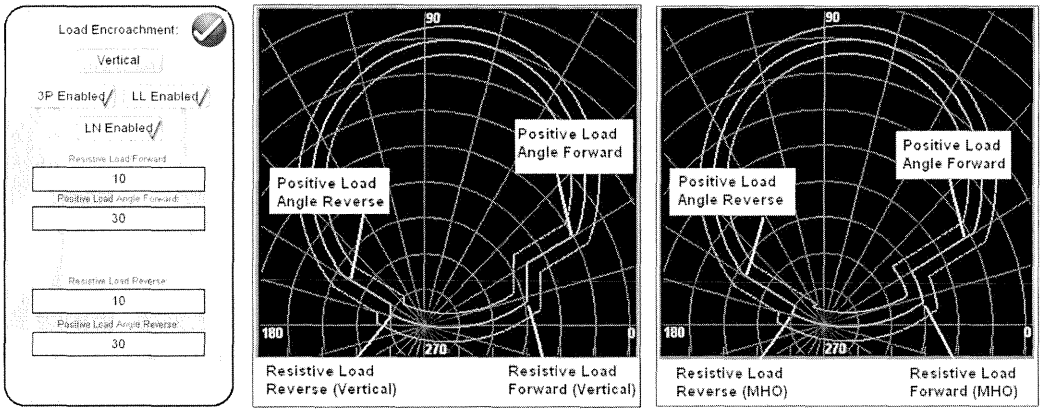

Figure 59 Load Encroachment Settings and Examples

The setting screen defaults to Vertical characteristic. Press the Vertical button to select for a MHO characteristic. To enable selective fault types press the appropriate button. It will change to yellow background and a checkmark will appear in the box. Enter the appropriate ohmic values and angles to achieve the desired characteristic.

3.6.2.2 **HALF MHO Setting Screen**

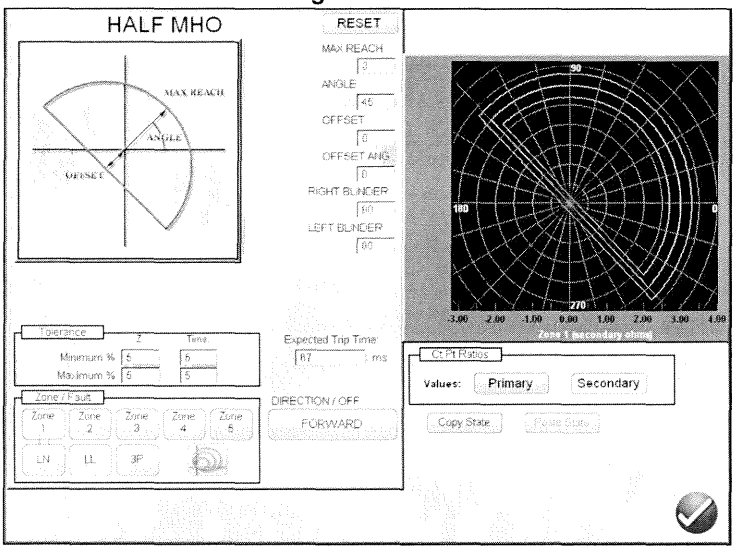

Figure 60 Half MHO Setting Screen

There are six basic settings, MAX REACH, ANGLE, OFFSET, OFFSET ANGLE, RIGHT BLINDER, and LEFT BLINDER that will define the relay operating characteristic. MAX REACH is a value in Ohms. ANGLE is a value in degrees normally associated with the maximum torque angle, line, or characteristic angle setting of the relay. OFFSET is a value in Ohms indicating either positive or negative offset. OFFSET ANGLE is a value in degrees, which may be different from the ANGLE setting. This setting is normally associated with the directional offset mho setting. RIGHT BLINDER, and LEFT BLINDER are values in degrees associated with blinder elements along the right and left sides of the original half MHO characteristic. Virtually any MHO / OHM type characteristic can be molded using a combination of the BLINDER values ranging from pie shape to something greater than a Half MHO up to an OHM characteristic.

3.6.2.3 **QUAD Setting Screen**

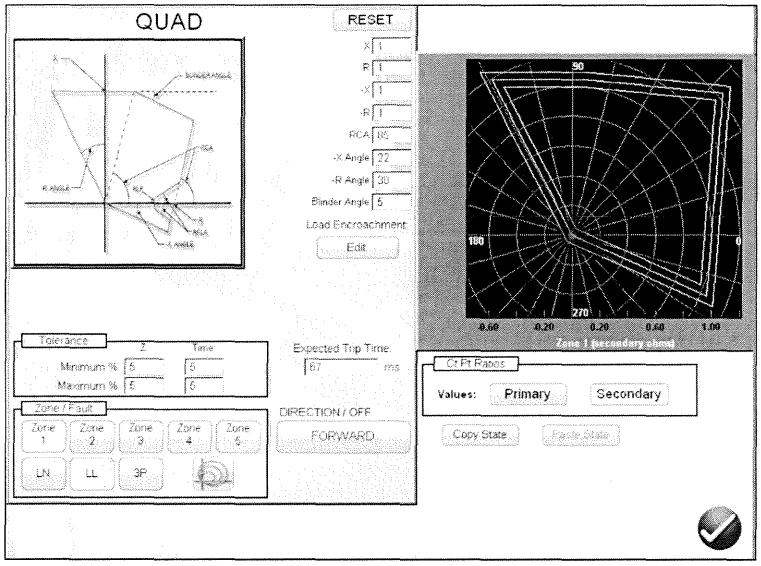

Figure 61 Generic QUAD Setting Screen

There are eight basic settings, X, R, -X, -R, RCA, -X Angle, -R Angle, and Blinder Angle that will define the relay operating characteristic. X and R are values in Ohms associated with the X and R axis, in an RX Impedance plane. The R value is normally referred to as the Positive Resistive Reach. The X value is normally referred to as the Positive Reactance Reach. The –X and –R are values in Ohms associated with –X and – R setting when the DIRECTIONAL setting is either set to NON-DIRECTIONAL or REVERSE settings. The – R value is normally referred to as the Negative Resistive Reach, and the – X value is normally referred to as the Negative Reactance Reach. The RCA is a value set in degrees normally associated with the maximum torque angle, line, or characteristic angle setting of the relay. The - X and – R Angles are values in degrees normally associated with the Directional Characteristic Angles. Blinder Angle is a value in degrees, sometimes referred to as the Tilt Angle or the Positive Reactance Angle.

3.6.2.3.1 **QUAD Load Encroachment Setting Screen**

For relays with Load Encroachment characteristics in the longer reaching zones of operation, pressing the Load Encroachment Edit button will reveal the following settings dialog box.

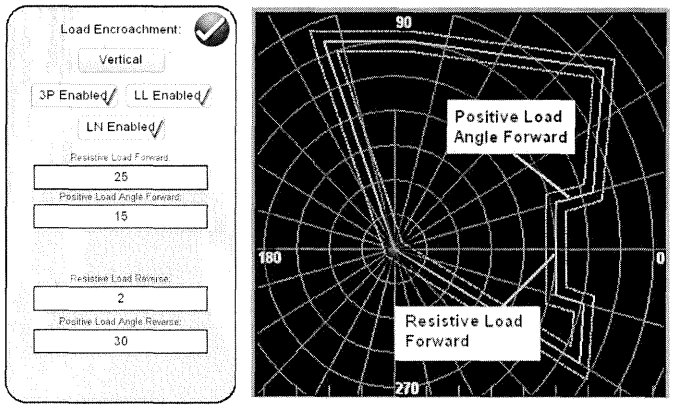

Figure 62 Load Encroachment Setting Screen for Generic QUAD and Example

To enable selective fault types press the appropriate button. It will change to yellow background and a checkmark will appear in the box. Enter the appropriate ohmic values and angles to achieve the desired characteristic.

3.6.3 Relay Library Files

Pressing the Relay Library button will provide a selection window containing relay specific impedance characteristics listed by relay manufacturer and Model identifier. Future software updates will include more relay specific files, see Upgrading STVI software for more information on downloading STVI software from the Megger website.

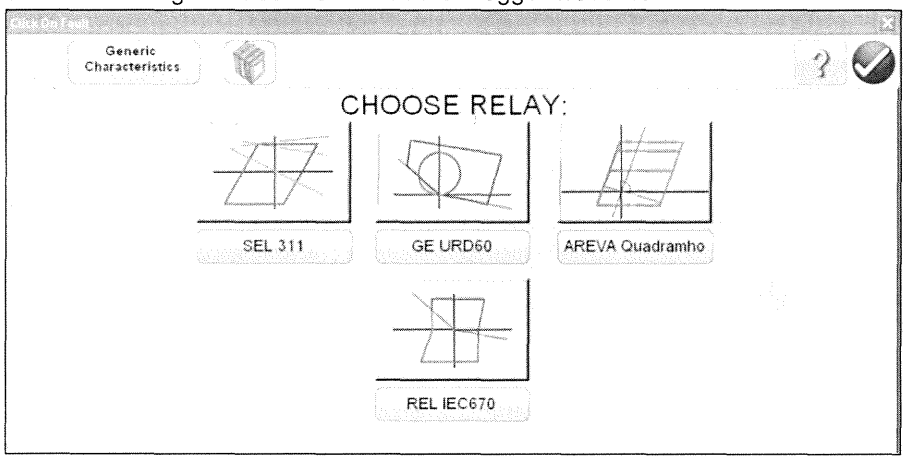

Figure 63 Relay Library Selection Screen

Impedance Relay Library

Select the desired relay and then enter the relay manufacturer's settings and the operating characteristic will be created from the settings entered. Note that specific relays have different characteristics depending on user input. Where relay may have multiple characteristics, selection buttons will be provided to choose from. For example, the Schweitzer SEL 311 and General Electric UR D60 relays have a selection for either Mho or Quad characteristics. The setting nomenclatures change with the selection of either Mho or Quad.

3.6.4 Impedance - Click On Fault Test Screen

After selection of either a Generic or a Library relay specific impedance characteristic, and entering the appropriate impedance settings for each of the specific Zones to be tested, press the green check button which will take the user to the Click On Fault Test Screen.

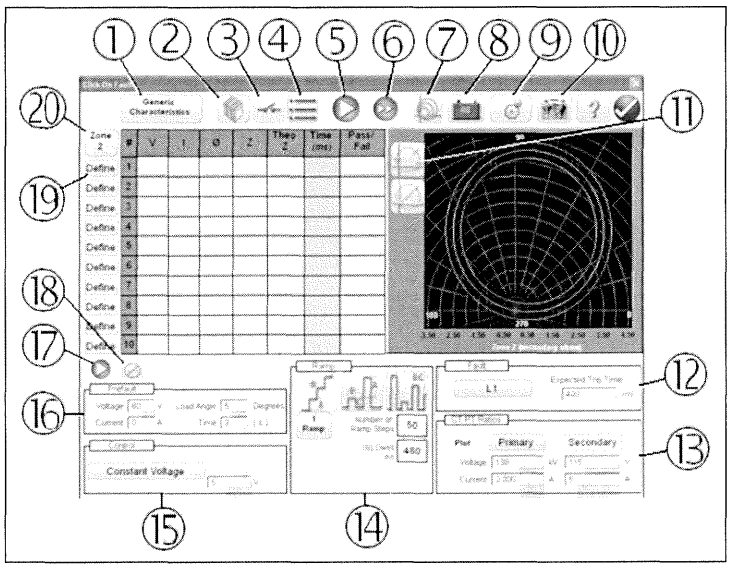

Figure 64 Impedance Relay, Click On Fault Test Screen

3.6.4.**1** Generic Characteristics button

Pressing the Generic Characteristics button will provide a library of generic impedance relay characteristics to choose from.

3.6.4.**2** Relay Library button

Pressing the Relay Library will provide a library of relay specific characteristics by various manufacturers.

3.6.4.**3** Binary Input Setting button

Press this box to reveal the Binary Input Dialog box.

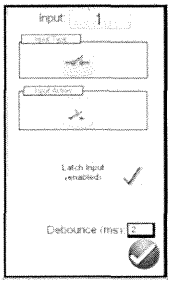

The default settings are Binary Input 1, dry contacts as indicated by the Input Type, and Input Action defaults to show the Closing of the Normally Open contacts. To change to the opening of Normally Closed contacts press the Input Action icon and it changes to show closed contacts opening. For timing the operating time of the impedance element the timer is defaulted to Latched Input enabled mode, which means the timer will stop on the first contact closure. Note the Debounce time is set to 2 milliseconds.

3.6.4.**4** Return to Settings Input Screen button

Return to the relay setting screen button provides access back to the settings screen.

3.6.4.**5** Play button

Pressing or clicking the blue play button will apply the Prefault (see #16) vector for the specified Time, then step to the Fault values and look for the relay under test to operate using either a Ramp, Pulse Ramp or Pulse Ramp Binary Search.

3.6.4.**6** Test All button

Press the Test All button to automatically sequence through all defined tests, Phase to Ground, Phase to Phase, and Three Phase, for all zones.

3.6.4.**7** Show All Zones button

Pressing this button will reveal all defined zones onto the one impedance test screen. Press it again and return to the single test screen mode.

3.6.4.**8** Battery Simulator button

The Battery Simulator button – Turns the Battery Simulator ON and OFF by pressing the button, the color changes red for ON and black for OFF. The voltage to be applied is displayed in the button and can be changed by pressing the configuration button.

3.6.4.**9** The Configuration button

Press the button to go to the STVI Configuration Screen. See Section 2.2.1 Configuration for more information of the Configuration Screen

3.6.4.**10** Review Test Report button

Press this button to review the test results.

3.6.4.**11** Test Points and Quick Test buttons 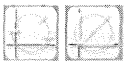

There are a variety of test point options available to the user to select from.

3.6.4.**11.1** Independence Test Points option

The Independence Test Points option- This provides maximum freedom to the user to select any test line, at any angle, around the operating characteristic by clicking at a point outside and then inside the operating characteristic to define the desired test line. Press this button again to reveal the IEC60255 Test Points option.

3.6.4.**11.2** IEC60255 Test Points option

The IEC60255 Test Points option- In accordance with IEC 60255 standard click a point outside, then inside, the operating characteristic and the test line will be drawn perpendicular to the operating characteristic line. Press this button to reveal the Origin Test Points option.

3.6.4.**11.3** Origin Test Points option

The Origin Test Points option - Click a point outside the operating characteristic and the test line will be drawn to the origin or the intercept of the R and X axis. Press this button to reveal the Shots Test Points option.

3.6.4.**11.4** Shots Test Points option

The Shots Test Points option – Used to create one or more points of test, each to replicate a fault at a particular magnitude and angle. Several Trip (inside the operating characteristic) and/or No-Trip (outside the operating characteristic) points may be selected for each Fault Type. The **Test Point** is the set of values listed both in Mag and Phase Angle, and in Cartesian values that are

created in the Graph. Continued clicks will produce additional test points at the mouse locations. Pressing this button again will return the user to the default Independence Test Points setting screen.

3.6.4.**11.5** Quick Test options

Quick Test options – There are two types of Quick Test. The default Quick Test will provide the user with a quick test option solution. The quick test options are,

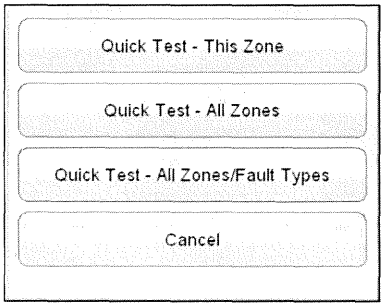

Figure 65 Quick Test Options Selection Screen

Three test lines will be drawn for any of the selected Quick Test solutions. Any test lines can be deleted and redrawn by the user as desired.

The second Quick Test is available when you select your first test point using the Independence test point's option. Press this button to reveal the following quick test point options.

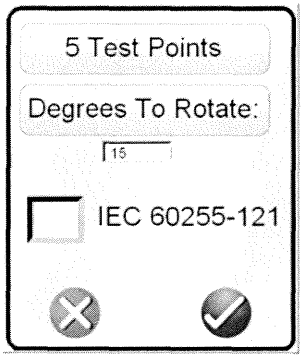

Figure 66 Test Points Selection Screen

The user may select the desired number of test points by pressing the Test Points button and select from the list. Then the user may select the desired phase rotation between the selected number of test points by pressing the Degrees to Rotate button. If none of the standard phase rotations meets the user's needs, press the Degrees to Rotate button in the list and enter the desired phase rotation in the window provided. If required to test per IEC 60255, check the IEC 60255 window provided. Press the green check button and all of the test lines will be automatically drawn.

3.6.4.**12** Fault Dialog Box

This dialog box provides user inputs to select the desired fault to be defined. The choices are Phase to Ground, Phase to Phase, and Three Phase, plus the Expected Trip Time. The expected trip time will be used to determine Pass/Fail for the operating time of each Zone.

3.6.4.**13** CT PT Ratios Dialog Box

This dialog box provides user inputs for the CT and PT Primary and Secondary ratings. These values are used in the Impedance Graphic to display the operating characteristic in either primary or secondary Ohms depending on the user selection in the Relay Setting Screen.

3.6.4.**14** Ramp Options button

This dialog box provides three different ways to determine the operating characteristic of impedance relays. Selection of the type of ramp is dependent on the relay. If testing a single zone relay, the linear ramp can be used. To test Multi-Zone relays use either the Pulse Ramp or Pulse Ramp Binary Search. With the Linear Ramp and Pulse Ramp selection, the user can define a double ramp if desired to increase the resolution and accuracy by pressing the Ramp button. There are two user input windows. The Number of Ramp Steps automatically defaults to 50. Thus the software will automatically calculate the increment required in volts, amps and phase angle. The higher the number of steps increases the resolution and accuracy, but it also increases the test time. The Dwell time is set in milliseconds, and automatically set to a value approximately 16% higher than the Expected Trip Time (just long enough for the zone being tested to operate, but not for other zones). The Pulse Ramp and Pulse Ramp Binary Search also include a Prefault setting in milliseconds.

3.6.4.**15** Control Dialog Box

This dialog box provides the user with a selection of different methods to perform the tests. Some manufacturers require Constant Voltage and ramp current, some require Constant Current and ramp voltage. In addition, the user may also select Constant Source Impedance.

Constant Voltage - Enter the value of volts to be held constant for all Fault Types tests under execution. Default value is 5.0.

Constant Current - Enter the value of amperes to be held constant for all Fault Types tests under execution. Default value is 5.0.

Constant Source Z- There are two forms of Source Impedance; Ohms and Angle ,or R and X. Enter the value of ohms and angle of source to be held constant for all Fault Types tests under execution, or enter the R and X values where;

R: the Cartesian resistive equivalent of the impedance **[Z]** and its angle **Phi**

X: the Cartesian reactive equivalent of the impedance **[Z]** and its angle **Phi**

3.6.4.**16** Prefault Dialog Box

The prefault values will be applied to the relay under test prior to ramping. If using Pulse Ramp the prefault values will be applied between each pulse increment. The Prefault Dialog box contains four edit fields:

Voltage – Enter a value of Voltage to be set

Current – Enter a value of Current to be set

Load Angle – Enter a value for a Load Angle to be set

3.6.4.**17** Individual Play Test button

This button is located directly under the **Define** buttons column. Pressing this button will provide Individual play buttons for all Defined tests. The user can then selectively test any one defined test (1 thru 10) by pressing the Individual Play test button associated with the desired test point.

3.6.4.**18** Clear Test(s) button

This button only appears next to the Individual Play button once tests are defined. Press this button to clear tests from the selected test screen. Pressing this button will provide a list of user options as follows,

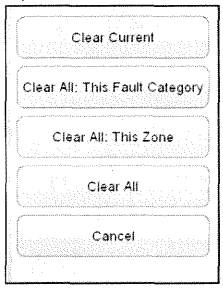

Figure 67 Clear Tests Options Screen

Clear Current – Clears the currently selected test
Clear All: This fault category – Clears all tests associated with the Fault
Clear All: This Zone – Clears all tests associated with the select Zone
Clear All – Clears all tests for all zones

Note: There is no going back; once you clear a test there is no way to recover the tests unless you have saved the test to the internal memory.

3.6.4.**19** Define buttons

Press the define button to set a test point, or to adjust an existing test point.

3.6.4.**20** Zone button

Press to select the desired zone to be tested. There are up to five zones available.

4.0 Warranty Statement

Megger warrants the product is free of defects in material and workmanship for a period of one (1) year from date of shipment. This warranty is non-transferable. This warranty is limited and shall not apply to equipment that has damage, or cause of defect, due to accident, negligence, and improper operation, faulty installation by the purchaser, or improper service or repair by any person, company or corporation not authorized by Megger. Megger will, at its' option, either repair or replace those parts and/or materials it deems to be defective.

The warranty is in lieu of all other warranties, either expressed or implied on the part of Megger and in no event shall Megger be liable for the consequential damages due to the breach thereof.

5.0 Service Data

5.1 Preventive Maintenance

The unit utilizes surface mount technology (SMT) and other components which require little or no service except for routine cleaning, etc. The unit should be serviced in a clean atmosphere away from energized electrical circuits.

5.1.1 Examine the unit every six months for:

Dust and Dirt	To clean the unit, never use spray liquids or industrial cleaners. Some cleaning solvents can damage electrical components, and should never be used. Use a lightly damp cloth (not dripping wet) to wipe off the unit. Remove dust with dry, low pressure, compressed air.
Moisture	Remove moisture as much as possible by putting the test set in a warm, dry environment.

5.1.2 Upgrading STVI Software

Upgrade via Megger Website

To download the newest STVI software from the Megger website,

1. Get the serial number of your unit.
2. Go to WWW.Megger.com
3. **Log In**. If you have not registered before you will need to do so first.
4. Go to **Software Downloads**
5. Click on **STVI**
6. You will see instructions to enter the serial number of the STVI unit, and then click on **Continue**. The serial number is 12 digits long. Make sure you enter all 12 digits. Then click on **Software Version #.##**. The firmware will be downloaded onto your PC as a zip file. Unzip the file, **Select All** files, and **Copy** to a USB memory stick[1] (use a 2 GB or smaller stick), or create a file on your PC for storage to unzip or extract to a file.

Upgrade via Compact Disk
Where internet access may not be available or blocked on your computer, Megger can provide a CD with the latest version of software on it. Contact your local Megger representative to order a copy of the firmware.

How To Download Software into STVI

USB Memory Stick: With the STVI powered up, insert the USB memory stick into the USB port on top of the STVI. A window will appear stating that there is a software upgrade available and will ask if you want to execute the upgrade. Press Yes and the unit will automatically upgrade the software. When complete, power down the STVI by disconnecting the Ethernet cable. Wait about 5 to 10 seconds and reconnect the cable. Observe the STVI display screen. When the basic test screen appears, press the Configuration button, then press the Display Versions button and verify the version of the software upgrade.

5.2 **Service and Repair Instructions**

Basic troubleshooting information has been provided to guide the technician to the possible source of a problem.

[1] You can use the STVI USB port to update the STVI software using a memory stick (2 GB or ***smaller***) with the firmware on it. The STVI USB port does not support memory sticks larger than 2 GB.

Since the STVI uses Surface Mount Technology, repairs of the individual printed circuit boards are beyond the scope of the basic troubleshooting guide, and should be referred to the Service Department at Megger or handled through the Megger Representative.

If the unit is still within the original warranty period, or limited warranty period following factory servicing, **the factory must be contacted before attempting any repairs or the warranty will be void.**

5.2.1 Basic Troubleshooting

The troubleshooting information relies on the technician to have a good understanding of the operation of the unit. The technician should contact the factory should they have any questions regarding the operation of the unit. Provide the Megger the serial number of the STVI when making inquiries.

WARNING It is necessary to energize the SMRT36 to properly troubleshoot the STVI. The technician must take all applicable safety precautions for working with the possible energized outputs of the SMRT36.

NOTES

Before suspecting a failure in the STVI review the Description of Controls and Theory of Operation sections to ensure that the problem is not a result of operating error.

Common causes of malfunctions, other than improper operation, are bad Ethernet cable or cable connectors, or incorrect power input (voltage above or below specified limits).

NOTE: Under no circumstance should the technician take the STVI apart without following proper ESD protection and handling procedures. Failure to do so, will damage sensitive parts.

5.2.1.1 Power Input

Input voltage affects the whole unit, including the 48 Volts DC to the STVI from the PoE port, and may or may not cause permanent damage if voltage is incorrect. These problems can often be corrected by simply using a better source of input power. See unit front panel for input voltage rating.

Some symptoms are as follows:

1. Low voltage: Erratic operation, no display, or a dim display.

2. High voltage: Circuit breaker operation on SMRT unit, power supply failure.

   a. For SMRT1 and MPRT units, the STVI uses the PoE power supply. It has an LED that lights up under normal operation. If not lit, then the PoE power supply has failed and needs to be replaced, PN: 90001-736.
   b. For SMRT36, the internal power supply needs to be repaired or replaced, contact the factory for further instructions.

5.2.1.2 Ethernet Cable

Basic troubleshooting of the Ethernet communication cable as follows,

1. No power: Check power source and line cord. If the SMRT36 powers up, but the STVI display does light up, check the cable and cable connectors. Typical problem is usually a broken conductor or cracked cable connector. Replace cable to see if this resolves issue.

2. Erratic Manual Control / Missing Channels on STVI Display
   A. Communication cable is not properly connected, thus cannot receive proper commands.
   B. Internal problem with communications inside the SMRT36, see SMRT36 in Addendum A. Communication cables inside the SMRT36 unit may require reseating.

Contact the factory for a Repair Authorization Number and return instructions if service is required. A Repair Authorization (RA) number will be assigned for proper handling of the unit when it arrives at the factory. Any non-warranty repair cost incurred for the repair or replacement of parts and/or materials shall be the responsibility of the purchaser.

Provide the factory with model number, Unit serial number, nature of the problem or service required, return address, your name, and how to contact you should the factory need to discuss the service request.

You may need to provide a purchase order number, cost limit, billing, and return shipping instructions. If an estimate is requested, provide the name and contact information.

6.0 Preparation for Reshipment

Save the original shipping container for future use. The shipping container is designed to withstand the rigors of shipping via a common commercial carrier.

Pack the equipment appropriately to prevent damage during shipment. If a reusable container is utilized, the unit will be returned in the same shipping container if it is in suitable condition.

Add the Return Authorization Number to the address label of the shipping container for proper identification and quicker handling.

NOTE: Ship the equipment without nonessential items such as test leads, etc. These items are not needed by the factory to perform service.

Megger®

Addendum A

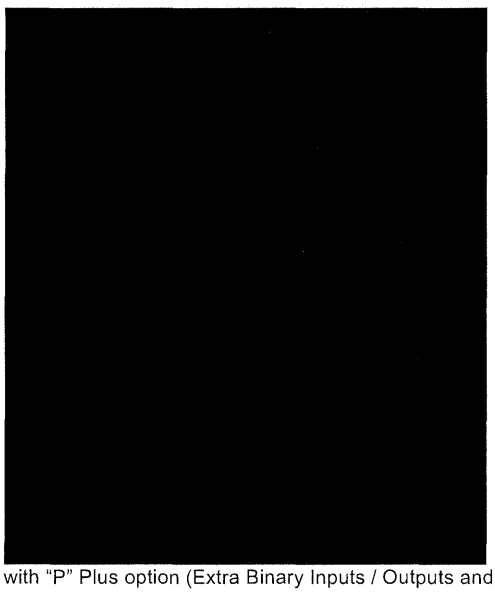

* SMRT36 shown with "P" Plus option (Extra Binary Inputs / Outputs and battery simulator)

Model SMRT36
Megger Relay Tester

SAFETY PRECAUTIONS

⚠ VOLTAGES GENERATED BY THIS INSTRUMENT CAN BE HAZARDOUS

This instrument has been designed for operator safety; however, no design can completely protect against incorrect use. Electrical circuits are dangerous and can be lethal when lack of caution and poor safety practices are used. There are several standard safety precautions that should be taken by the operator. Where applicable, IEC safety markings have been placed on the instrument to notify the operator to refer to the user manual for instructions on correct use or safety related topics. Refer to the following table of symbols and definitions.

Symbol	Description
	Direct Current
	Alternating Current
	Both direct and alternating current
	Earth (ground) Terminal. There is a common chassis ground terminal located on the front panel (see Front panel under Description of Controls.
	Protective Conductor Terminal
	Frame or Chassis Terminal
	On (Supply)
	Off (Supply)
	Caution, risk of electric shock
	Caution (refer to accompanying documents)

⚠ **WARNING: Under no circumstances should the operator or technician attempt to open or service this instrument while connected to a power source. Lethal voltages are present and may cause serious injury or death!**

SAFETY PRECAUTIONS (Continued)

The following are some specific safety related items associated with the SMRT test system.

Read and understand all safety precautions and operation instructions before attempting to use this unit.

The purpose of this equipment is limited to use as described in this instruction manual. Should a situation arise that is not covered in the general or specific safety precaution please contact Megger regional representative or Megger, Dallas Texas.

Safety is the responsibility of the user. Misuse of this equipment can be extremely dangerous.

Always start with the power OFF, before connecting the power cord. Make sure outputs are off before attempting to make test connections.

Never connect the test set to energized equipment.

Always use properly insulated test leads. The optional test leads are rated for the continuous output ratings of the test system, and should be properly used and cared for. DO NOT use cracked or broken test leads.

Always turn the test system off before disconnecting the power cord.

DO NOT attempt to use the unit without a safety ground connected.

DO NOT attempt to use the unit if the power cord ground prong is broken or missing.

DO NOT use the test set in an explosive atmosphere.

The instrument must only be used by suitably trained and competent persons.

Observe all safety warnings marked on the equipment.

For safety related or other important topics, like the statement below, will be notated with the adjoined symbol. Read the topic carefully as it may relate either to the safe operation of the test system or the safety of the operator.

⚠ **Under no circumstances should the operator put their hand or tools inside the test system chassis area with the test system connected to a power source. Lethal voltages are present and may cause serious injury or death!**

1.0 Operation

The unit's design is a "modular" concept. All inputs and outputs are clearly marked and logically grouped so continual reference to the instruction manual should not be necessary once the operator is acquainted with the test system. The unit's Top Panel will appear different among units, since each unit may have up to three optional Voltage/Current Generator (VIGEN) Modules installed. The 'N' version consists of a system board with only the power and communication ports. The 'P' version adds 8 additional binary inputs, 4 additional binary outputs and a battery simulator.

1.1 General Description

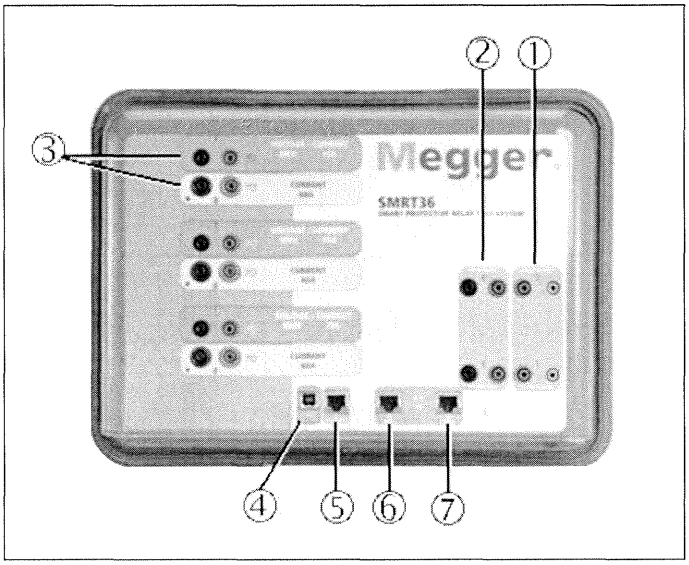

Figure 68 Top Panel SMRT36 (Pictured with Floating Returns Option)

1.1.1 Top Panel

1. ***Binary Outputs*** – the first two VIGEN modules include Binary Inputs and Binary Outputs. Therefore, with a minimum 2 channel unit there are 2 Binary Outputs located on the top panel (numbered 1 and 2). More Binary Outputs are available with the P option see Front Panel section for more information. Each Binary Output can be configured as Normally Open or Normally Closed contacts providing logic to the device under test. The Top Panel Binary Outputs can switch up to 300 VAC or 250 VDC with 8 Amp continuous. The programmable wait duration is from 1 millisecond to 10,000 milliseconds.

2. ***Binary Inputs*** – with a minimum 2 channel unit there are 2 Binary Inputs located on the top panel. More Binary Inputs are available with the P option see Front Panel section for more information. The Binary Inputs will accept a voltage range of 5 to 300 VAC, or 5 to 250 VDC, or dry Normally Open / Normally Closed contacts.

3. ***Voltage/Current Generator Module (or VIGEN)*** –There are three available slots for the VIGEN Modules. The slots are numbered 1 to 3 from bottom to top, with the topmost VIGEN numbered 3. The three phase voltages and currents are noted by the red and yellow surrounding each output channel. Phases A, B and C Voltage Channels (V1, V2 and V3) are denoted by the red color. Phases A, B and C Current Channels (I1, I2 and I3) are denoted by the yellow color. When the voltage generators are converted to current

generators, they will change on the STVI display as V1 = I4, V2 = I5 and V3 = I6. For more details on the VIGEN output capabilities see section 1.4.

4. ***USB Interface*** – the USB 2.0 Interface requires a Type B "downstream" connector, and is primarily used as a communication and control port when used with a PC and Megger AVTS software for automated relay testing. A USB cable is not provided with the test set or in the optional accessories. For computer control, an Ethernet cable is provided. However, should the user desire to use the USB port any standard USB A/B cable will work with the unit. May be used when isolation is required for a secure substation access between the SMRT and the IEC 61850 substation network.

5. **PC/OUT** Ethernet Port is a 10/100BaseTX port, and is the primary PC connection port. This port supports MDI/MDI-X auto cross over configuration, which means both standard and "crossover" Ethernet cables may be used. This port provides the optimal method for downloading EMTP files, DFR streaming, and updating the unit's firmware as required. The SMRT comes standard with a crossover cable. This port may also be used for connecting to the IEC 61850 substation bus for use in testing IEC 61850 devices. For multiple unit operation, the unit providing the OUT link is providing the master phase reference to all units "downstream".

6. **IN - 61850** Ethernet Port is a 10/100BaseTX port, and is primarily used to interconnect multiple SMRT units together for synchronous multi-unit operation. It may also be used to provide access to the substation IEC 61850 network. Note that the IN and STVI ports share a common physical port and cannot be used at the same time. With the PC connected to the PC Port, the SMRT and the PC share the same Ethernet network connection, and thus will not have a secure isolation from each other.

⚠ 7. **STVI** Ethernet Port – this Ethernet port is a 10/100BaseTX PoE (Power over Ethernet) port, and is the STVI connection port. Used for manual operation, and display outputs when under computer control.

1.1.2 Front Panel:

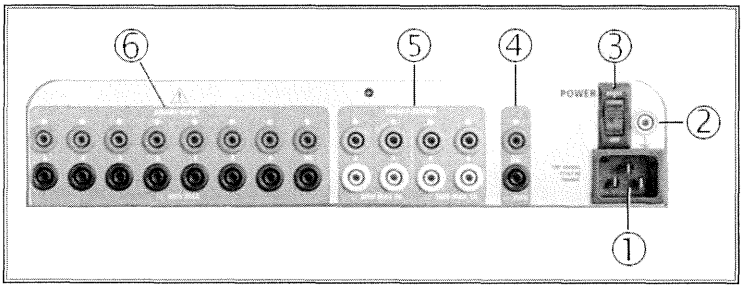

Figure 69 SMRT36 with P Option Front Panel

1. ***Incoming Power / Line Cord*** – the input line cord, ground terminal, are mounted on the front panel of the test set for both the N and P option units.

Input Line Cord

⚠

The test set is equipped with a line cord, which connects to the male connector on the front panel. Verify the input voltage rating on the front panel before connecting the line cord to the power source.

2. ***Earth Ground Jack*** – use this terminal to connect chassis ground to earth ground. A chassis ground (earth) point on the front panel is provided as an additional safety ground.

3. ***POWER ON/OFF Switch*** – used to switch unit on and off. The switch illuminates when power is on.

4. ***Battery Simulator*** – the SMRT36 with the P option provides a variable dc output voltage from 5 to 250 Volts, at 100 Watts (4 Amps Max) providing logic voltage for solid-state relays. When powered ON, the LED above the output terminals illuminates. The SMRT36 with the N option does not include a battery simulator.

5. ***Binary Outputs*** – the P option provides 4 additional Binary Outputs, numbered 3, 4, 5 and 6. Each Binary Output can be configured as Normally Open or Normally Closed contacts providing logic to the device under test. Binary Outputs 3 and 4 have an AC Rating of 400 V max., Imax: 8 amps, 2000 VA max. breaking capacity, and a DC Rating of 300 V max., Imax: 8 amps, 80 Watts, with a Response Time: < 10ms. Binary Outputs 5 and 6 are high speed and have an AC / DC Voltage Rating of 400 V peak, Imax: 1 amp, with a Response Time: < 1ms typical. The programmable wait duration is from 1 millisecond to 10,000 milliseconds. An LED directly above the terminals indicates the status of the contact. ON indicates closed, and OFF indicates open. The SMRT36 with the N option does not include the additional Binary Outputs 3 through 6.

6. ***Binary Inputs*** – the P option provides 8 additional (numbered 3 through 10), independent, galvanically isolated, Start/Stop or Monitor circuits to monitor operation of relay contacts or trip SCR. A continuity light is provided for each input gate. Upon sensing continuity, or voltage applied, the lamp will glow. In addition to serving as wet/dry contacts the Binary Inputs may be programmed to trigger binary output sequence(s). Binary Inputs can also be programmed using Boolean logic for more complex power system simulations. The Binary Inputs will accept a voltage range of 5 to 300 VAC or 5 to 250 VDC, or dry Normally Open / Normally Closed contacts. The SMRT36 with the N option does not include the additional Binary Inputs 3 through 10.

1.2 Input Power

The input voltage rating varies depending upon the model number. If the model number has a letter **F** or **G** in the 5th digit, the input voltage may be from 100 to 240 VAC, ± 10%, 50/60 Hertz. If the letter is either **C** or **E**, the input voltage may be from 220 to 240 VAC, ± 10%, 50/60 Hertz. Total maximum output power will be limited for CE marked units[2]. Input current required varies with the number of output modules in use, load, and input voltage value. With three VIGENS, the maximum input power is 1800VA. The input is protected by a power ON/OFF switch / circuit breaker.

1.2.1. Input Power Cord

Depending on the country, the power cord can come with a NEMA 5-15 male connector, a CEE 7/7 Schuko two prong connector, with International Color Coded pig-tail wires (light blue, brown and green with yellow stripe) with the insulation jacket stripped ready for installation of the appropriate male connector, or with UK power cord.

[2] For CE mark units only (C or E in the 5th digit), a derating of the simultaneously available total output power of the current / voltage amplifiers and battery simulator will occur. The maximum output power of a single amplifier is not affected.

Model SMRT36 X0XXXX**A**XXX comes with a North American power cord (part number 620000).

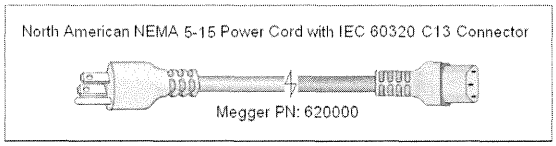

Model SMRT36 X0XXXX**E**XXX comes with a Continental Europe power cord (part number 50425).

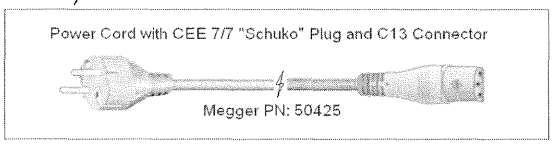

Model SMRT36 X0XXXX**I**XXX comes with an International Color Code power cord. The cord, part number 15065, is ready for wiring to the appropriate plug (depending on country). The following colors apply, Brown = Line, Blue = Neutral and Green/Yellow = Ground.

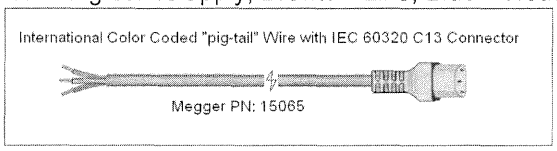

Model SMRT36 X0XXXX**U**XXX comes with a UK power cord (part number 90002-989).

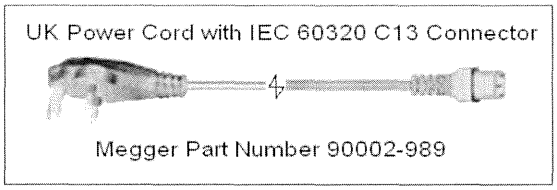

1.3 **Voltage - Current Generator (VIGEN) Module**

Voltages and Currents are noted by the red and yellow surrounding each output channel. Phases 1, 2 and 3 voltage channels are denoted by the red color. Phases 1, 2 and 3 current channels are denoted by the yellow color. All outputs are independent from sudden changes in mains voltage and frequency, and are regulated so changes in load impedance do not affect the output. Standard amplifier outputs are isolated or floating. The SMRT units can be ordered with the amplifier common returns tied to chassis ground as an option.

1.3.1. Convertible Voltage/Current Amplifier

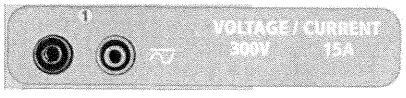

The SMRT PowerV™ voltage amplifier provides a flat power curve from 30 to 150 Volts in the 150V range to permit testing of high current applications such as panel testing.

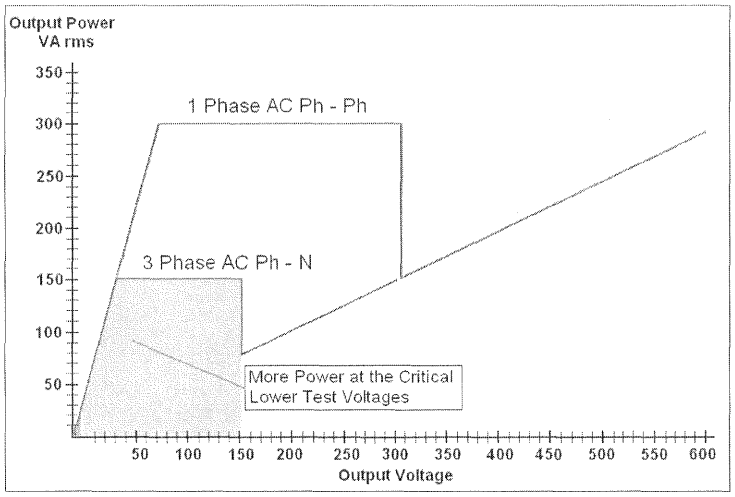

Figure 70 SMRT Voltage Amplifier Power Curve

Voltage Range	**Power / Current (Max)**
30.00V	150VA @ 5.0A
150.00V	150VA Constant Output Power from 30 to 150 Volts
300.00V	150VA @ 0.5A

Voltage Amplifier in Current Mode:
The voltage amplifier is convertible to a current source with the following output capability. Output power ratings are specified in rms values and peak power ratings.

Output Current	**Power**	**Max V**	**Duty Cycle**
5 Amperes	150 VA (212 peak)	30.0 Vrms	Continuous
15 Amperes	120 VA	8.0 Vrms	90 Cycles

With a 3 channel SMRT unit, convertible channels in conjunction with the three main current channels, provides 6 currents for testing three phase current differential relays. When the voltage generators are converted to current generators, they will change on the STVI display as current phases 4, 5 and 6.

The voltage amplifier output is protected from short circuits and thermally protected against prolonged overloads. In case of a short circuit or a thermal overload, the amplifier will automatically turn off, and if the STVI is connected a message to the user will be displayed indicating which condition exists. If AVTS software is used, a similar message will appear.

1.3.2. Current Amplifier

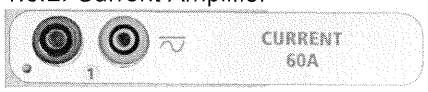

The SMRT current amplifier Constant Power Output feature delivers maximum compliance voltage to the load constantly during the test, and range changing is done automatically, on-the-fly, under load. This insures better test results, saves time by not having to turn the outputs off to change output taps or ranges, and unlike single range current amplifiers insures a higher compliance voltage at lower test currents. Constant Power Output in many cases eliminates the need to parallel or series current channels together to test high burden relays.

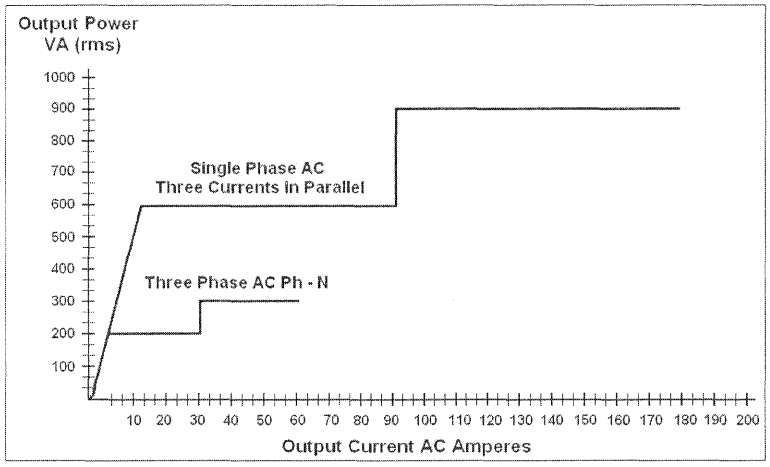

Figure 71 Current Amplifier Constant Power Output Power Curves

The following are typical output current and associated available compliance voltage values. The per channel output current and power ratings are specified in AC rms values and peak power ratings. Specified duty cycles are based upon typical room ambient temperature.

Output Current	**Power**	**Max V / Duty Cycle**
1 Ampere	15 VA	15.0 Vrms Continuous
4 Amperes	200 VA (282 peak)	50.0 Vrms Continuous
15 Amperes	200 VA (282 peak)	13.4 Vrms Continuous
30 Amperes	200 VA (282 peak)	6.67 Vrms Continuous
60 Amperes	300 VA (424 peak)	5.00 Vrms 90 Cycles
DC 200 Watts		

The current amplifier output is protected from open circuits and thermally protected against prolonged overloads. In case of an open circuit or a thermal overload, the amplifier will automatically turn off, and if the STVI is connected a message to the user will be displayed indicating which condition exists. If AVTS software is used, a similar message will appear.

1.4 Binary Inputs and Outputs

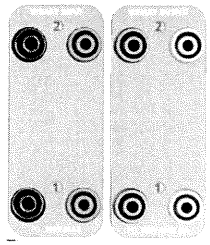

Figure 72 Binary Inputs and Outputs 1 and 2

Binary Inputs and Outputs are clearly marked and logically grouped. The unit's Top Panel will appear different among units, which means Binary Input / Output 1 will always be occupied while Binary Input / Output 2 may, nor may not, depending on the configuration. The 'N' version consists of a system board with only the power and communication ports. The 'P' version adds 8 additional binary inputs, 4 additional binary outputs and a battery simulator. The Binary Inputs are used to monitor relay trip contacts for performing pickup and dropout tests as well as for performing timing functions. The Binary Outputs are used to simulate normally open / normally closed contacts for testing breaker failure schemes, or similar power system operations. In addition they may also be used to switches AC/DC voltages and currents.

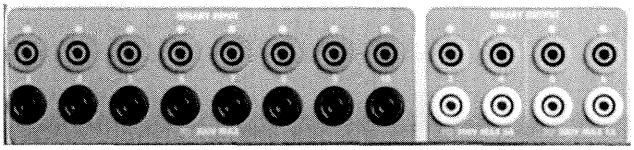

Figure 73 "P" Option
Binary Inputs 3 to 10 and
Binary Outputs 3 to 6

1.4.1 Binary Inputs

The binary inputs are specifically designed to measure high speed operation of electro-mechanical, solid-state and microprocessor-based protection relays. All binary Inputs default to Monitor Mode, Contact change of state, latched OFF. If using the STVI or STVI software to change a binary input from Contact change of state to Voltage Applied / Removed click on or touch the Input Type window and a sine wave will appear where the Contact icon was indicating. The input is now set for voltage sensing. To change the binary input from Monitor mode to Timer Mode, click on or touch the Use as Monitor button and the display window will change to show Use as Trip, Latched, meaning the binary input is now set to stop the timer upon sensing the first contact closure (if the Input Type is set for contact) or upon sensing voltage if the Input Type is set to Voltage Sensing.

1.4.1.1 Start, Stop, and Monitor Gates

In the SMRT36 there are up to ten identical, independent, programmable gate circuits that permit simple selection of the desired mode for timing or contact monitoring operation.

To monitor operation of the contacts or trip SCR in the device under test, a light is provided for each gate. The gate circuit is isolated for voltage-sensing and can monitor solid-state logic signals. Each light will illuminate once contacts close or voltage is applied to the gate.

1.4.1.1.1 Dry Contacts Open

Timer stops or a continuity indicator goes out at the opening of normally closed contacts, or when conduction through a semiconductor device, such as a triac or a transistor, is interrupted.

1.4.1.1.2 Dry Contacts Close

Timer stops or a continuity indicator glows at the closing of the normally open contacts, or upon conduction through a semiconductor device such as a triac or a transistor.

1.4.1.1.3 Application or Removal of AC or DC voltage

This will either start the Timer or stop the Timer. The continuity indicator will glow (application) or darkens (removal) upon the application or removal of either an AC or DC voltage. A higher threshold voltage helps to eliminate false triggers due to a noisy source. Lower thresholds allow starting and stopping of timer from TTL voltage signals. The allowable voltage applied is 5 to 300 Volts AC or 5 to 300 Volts DC, current limiting resistors provide protection.

1.4.1.1.4 The Timer can be started when turning on any selected generators.

1.4.1.1.5 The Timer can be started simultaneously with a change in Frequency, Phase Angle, or Amplitude. Also, it can be started simultaneously with a Voltage or Current waveform step.

1.4.2 Binary Outputs

Binary Outputs 1 and 2 are located on the top panel, rated for 300 V at 8 Amps. The SMRT36 "P" system board option provides four additional Binary Outputs numbered 3, 4, 5 and 6. Each Binary Output can be configured as normally open or normally closed contacts providing logic to the device under test. Binary Outputs 3 and 4 have a rating of 300 V AC/DC, 8 amperes and a maximum of 2000 VA breaking capacity (80 watts DC), with a response time of less than 10ms. Binary Outputs 5 and 6 are high speed and have an AC/DC voltage rating of 400 volts peak, 1 ampere and a response time typically less than 1ms.

The contacts may be programmed to open or close, thus simulating circuit breaker operation. The programmable wait duration is from 1 millisecond to 10,000 milliseconds. A fused test lead (fused at 500 mA) is available as an optional accessory to help protect from blowing the internal fuse of binary outputs 5 & 6. The test lead is blue in color so that the user knows it applies to the blue binary outputs. The barrel holder of the test lead is CE marked with a 1000 V, CAT III rating, and marked FUSED 500 mA / 1000 V/ 50 KA.

1.5 Battery Simulator

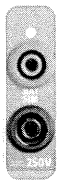

The SMRT36 "P" model includes the battery simulator, and provides a variable DC output from 5 to 250 VDC rated at 100 Watts, 4 Amperes max. User may select from normal setting values of 24, 48, 125, or 250 VDC, or enter the desired output voltage in the window provided, see the STVI Configuration Screen. The output is variable using the STVI Control Knob, or the PC up/down cursor arrows (see 3.5.5 of the STVI section).

Figure 74 Battery Simulator (BAT SIM)

⚠ **CAUTION:**

NOTE: DC voltage is ON and available when the output is turned on using the LCD touch panel or via software command. Do not plug or insert any test lead into the BATTERY SIMULATOR binding posts without first connecting the test leads to the load!

2.0 SETUP

2.1 Unpack System

Unpack the unit and check for evidence of any shipping damage. If there is any visual damage, immediately notify the freight carrier to make a damage claim, and notify Megger of the damage.

⚠ **CAUTION:**

Potentially lethal voltages may be present on the output terminals. It is highly recommended the operator read the user manual thoroughly and have an understanding of the test set operation prior to turning power on.

2.1.1 Initial Start Up

3. With the Ethernet cable supplied with the unit connect the **STVI** Ethernet Port on the SMRT unit to the Ethernet port on the top of the Smart Touch View Interface (STVI). If using the STVI PC version software, connect the **PC/OUT** Ethernet Port on the SMRT unit to the PC Ethernet port.

4. Before connecting power to the unit, make sure the POWER ON/OFF Switch is in the OFF position (0). Plug the unit line cord into an appropriate power source and turn the POWER ON/OFF Switch to ON (I). As the SMRT unit goes through its power up sequence, in about a minute the STVI power up screen will appear, then the manual start up screen will appear.

2.2 Communication Ports

There are several communication ports. These ports are: one USB, three Ethernet, and an optional Bluetooth wireless port.

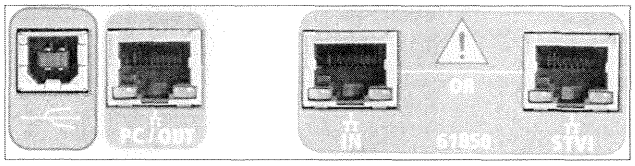

2.2.1 **USB** 2.0 Interface

USB 2.0 Interface requires a Type B "downstream" connector, and is primarily used as a communication and control port when used with a PC and Megger AVTS or STVI PC version software for automated relay testing. It is recommended that you use the Ethernet port for high speed communication and control of the SMRT unit. To use the USB port will require the user to configure the PC com port for USB operation. Clicking on the Instrument Setup icon on the PowerDB tool bar , the Instrument Configuration Screen (shown in the following figure)

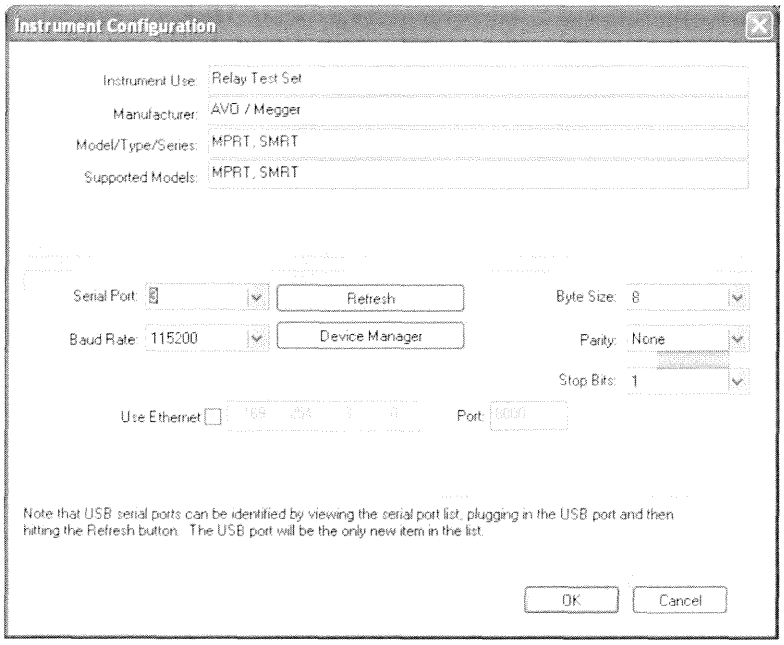

provides the user with access to the PC Device Manager screen. Click on the Device Manager button and navigate to the USB Ports file directory. Since the SMRT36 **defaults to a baud rate of 115,200**, the user will need to configure their USB output com port to match. Returning to the Instrument Configuration screen the user will need to check off the Use Ethernet check box, and set the Baud rate, Byte Size and Stop Bits as shown.

2.2.2 **PC/OUT** Ethernet Port

PC/OUT Ethernet Port is a 10/100BaseTX port, and is the primary PC connection port automated relay testing. This port supports MDI/MDI-X auto cross over configuration, which means both standard and "crossover" Ethernet cables may be used. The SMRT comes standard with a crossover cable.

In addition, this port maybe used to download large blocks of data into the unit. It is used to download digital samples for DFR playback, and download software / firmware updates. Since each output channel is capable of storing up to 256,000 samples of Digital Data, such as in Digital Fault Recordings for DFR playback, and with up to six channels that equals over 1.5 million samples. Typically the Ethernet port on the SMRT36 should download the data in 1 second or less. In addition to high speed downloads of DFR data, the port is also used to talk to the SMRT36 unit via a Network.

This port may also be used to interconnect multiple SMRT units together for synchronous multi-phase operation.

2.2.2.1 Setting SMRT IP Address for Operation with a PC

With the Ethernet cable supplied with the unit, connect the **PC/OUT** Ethernet Port on the SMRT unit to the PC Ethernet port. Turn the test set on. As the SMRT unit goes through its power up sequence, in less than a minute the STVI power up screen will appear. If using the PC version of the STVI software it will auto-detect the SMRT unit connected to the PC. Once it auto-detects the unit, and determines the configuration of the SMRT unit connected, the Manual screen will appear. The unit might not auto detect due to firewall settings. In this case the firewall can be turned off or you can enter the IP address directly using the PowerDB instrument configuration screen by clicking on the Instrument Setup icon on the PowerDB tool bar . From the Instrument Configuration Screen, shown in the following figure, click off the check mark in the Auto Discover Unit box.

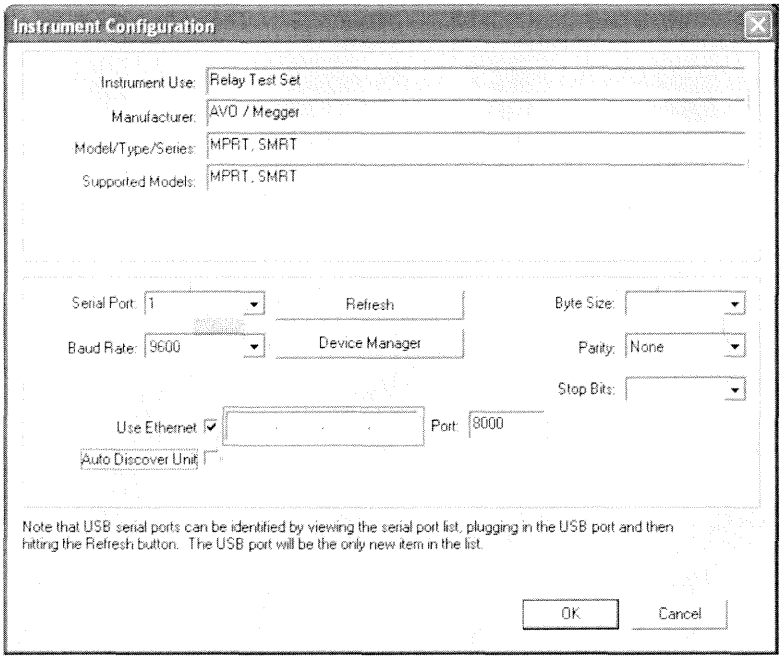

Figure 75 PowerDB Instrument Setup Screen

Here the user can enter the IP address directly into the box highlighted in red. The IP address of the unit can be determined by counting the number of times the Binary Output led flashes at the end of boot up cycle (the address is 169.254. <#flashes>.0). If the unit flashed four times, the address would be 169.254.4.0 . If the unit is on a network with a DHCP server, the user must use the Auto Discovery mode.

2.2.3 STVI Ethernet Port

STVI Ethernet Port is a 10/100BaseTX PoE (Power over Ethernet) port, which is the STVI connection port. This port provides power to the STVI using POE (Power Over Ethernet), and manual control of the SMRT unit with the STVI.

2.2.3.1 Setting SMRT IP Address for Operation with STVI

With the Ethernet cable supplied with the unit, connect the **STVI** Ethernet Port on the SMRT top panel to the Ethernet port on the top of the Smart Touch View Interface (STVI). As the SMRT unit goes through its power up sequence, in less than a minute the STVI power up screen will appear. The STVI will auto-detect the SMRT36 (does not require the user to input an IP address). Once it auto-detects the unit, and determines the configuration of the
SMRT unit connected, the Manual screen will appear.

2.2.4 **IN - IEC61850** Ethernet Port

IN Ethernet Port is a 10/100BaseTX port, and is used when interconnecting multiple SMRT units together. It is also provides access to the substation IEC 61850 network (when enabled). The SMRT36 with the IEC 61850 option enabled provides selectable priority, VLAN-ID, and meets the IEC 61850-5 standard Type 1A, Class P 2/3, for high speed trip and reclose simulations.

2.2.4.1 Setting SMRT IP Address for Networks or IEC 61850 Operations

⚠ The SMRT36 maybe controlled over a network. This provides remote control of the SMRT36 virtually over any distance allowing one PC to control at least two units simultaneously, such as in end to end testing. *Connecting the SMRT36 to a Local Area Network or a Wide Area Network could permit unauthorized operation of the unit.*

Through the IN Ethernet port, the SMRT36 integrates into a network just like a PC or server. To use this feature requires the user to setup the IP configuration of the SMRT36 for their LAN. Note that the SMRT36 when turned on will automatically search for and acquire a network address if connected to a network. If it fails to automatically acquire an address check to make sure you are properly connected using a standard Ethernet cable. ***Do not*** use a "cross-over" Ethernet cable (a cross over cable is designed for use from your PC to the test set, not to a network). If the unit still fails to acquire an address then there may be other issues. This will probably require assistance from your company's information management department.

For IEC 61850 testing connect the IEC61850 IN port to the substation bus or to the relay under test to receive and send GOOSE messages. When used with the Megger GOOSE Configurator in the AVTS software, the SMRT36 can provide high speed testing of IEC 61850 relays and substations by subscribing to GOOSE messages and mapping to the binary inputs. In addition, it can simulate system conditions such as circuit breaker operation by publishing GOOSE messages mapped to the SMRT36 binary outputs. With the PC connected to the OUT port, and running AVTS Megger GOOSE Configurator software, the operator can "sniff" the substation network. However, if a secure port is desired, where the operator cannot accidently trip off the substation or inflect a PC virus into the substation LAN, connect the PC to the SMRT USB port and sniff the network through the IEC61850 IN port.

3.0 Current Sources

3.1 Parallel Operation

Each SMRT current amplifier is capable of providing 30 Amperes continuous, and up to 60 amperes for 1.5 seconds for testing instantaneous trip elements. When more than 30 amps single phase is required for long durations, or 60 Amps for testing instantaneous elements, two or three current channels may be connected in parallel to provide 60 or 90 Amperes continuous, and up to 120 or 180 amperes for short durations.

Note: If an **F** or a **C** appears in the 5th digit of the style identification number (i.e. 30P1**F**0A0S1) the current returns are floating (isolated from each other and ground). Those units with a style number **G** or **E,** the current returns are common together internally and connected to earth ground.

To parallel the current channels of the unit, perform the following:

If using the sleeved multi-lead current test leads (part number 2001-396), all of the black return leads are interconnected together inside the sleeve so they will all share the return current together. Connect each current channel to the relay under test (both red and black terminals to the load). Each Megger test lead is rated for 32 Amperes continuous. If using test leads other than those supplied by Megger insure that the wire has sufficient size to carry the test current.

For the earth grounded common return (G or C) units, there is an internal common ground between the current channel return terminals. If using separate individual test leads, all of the return leads will need to be common together at the load as shown in the following figure. By not connecting a return lead to all of the current channels in use, part or all of the return current will be forced through the internal ground. That means with a 3 channel unit up to 180 Amperes could be forced through the internal common ground, and may cause damage to the internal common returns. Therefore, it is important that the parallel connections must be made at the relay. See the following figure.

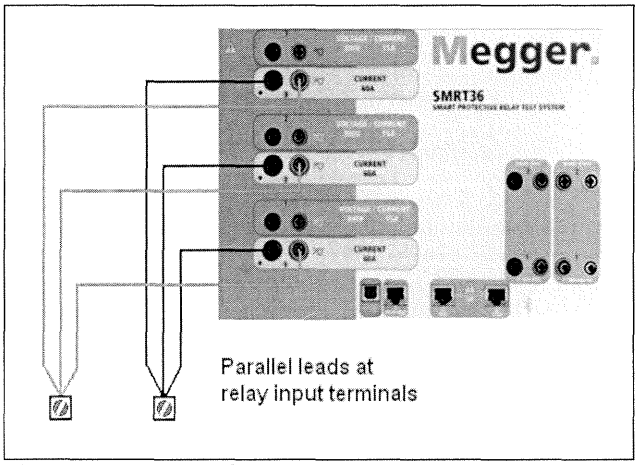

Figure 76 Parallel of All Three Current Outputs

3.1.1 Manual Test Screen - Single Phase Up To 180 Ampere

For ease of use and operator convenience, go to the Configuration screen and select the Operating Mode of ***3 Voltages – 1 Current @ 180 amps***. When you return to the manual test screen there will be one current channel displayed, as shown in the following figure.

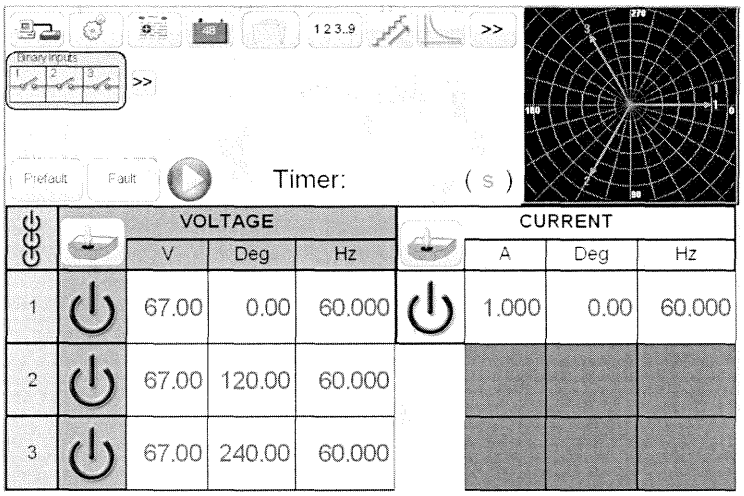

Figure 77 Manual Test Screen – Single Phase Operation

The STVI will automatically set all three currents in phase with each other and divide the current equally between the three current amplifiers. When setting an output, simply enter the value of the desired output current. For example, for an output of 75 Amperes, enter 75, while each current amplifier will be providing 25 Amperes. The current can also be phase shifted. Simply enter the desired phase angle and all three currents will be phase shifted together.

If two current channels that are to be used in parallel, leave the unit in the default three phase configuration. Connect the two current outputs to the load as shown in the following figure.

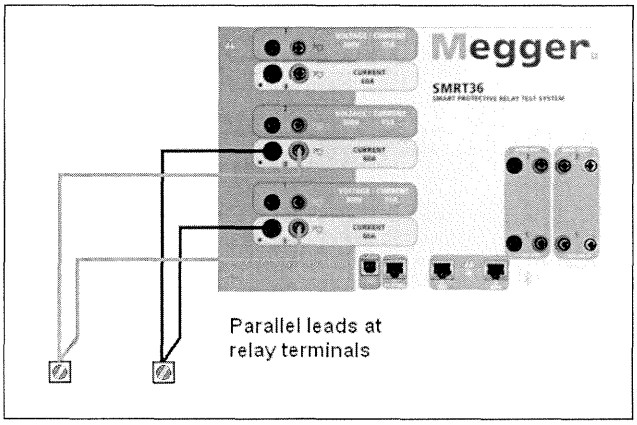

Figure 78 Two Currents in Parallel

Set each channel to one-half of the output requirement. Be sure and reset current channel #2 to 0 degrees so that it will be in-phase with current channel #1. With both current channels selected, turn output on by pressing or clicking on the ALL ON/OFF button. Always use the ALL ON/OFF button to turn both current channels on and off together. For manually ramping outputs, if using the PC version of the STVI software the ⇧⇩ buttons will be displayed. If using an STVI controller the Control Knob icon will be displayed. Pressing either of these two will present the user

with a window to select the desired level of increment for manually ramping the outputs, the desired channel(s) to be ramped, and what is to be adjusted (amplitude, phase angle or frequency).

3.2 Currents in Series Operation

Two current channels may be connected in series in order to double the available compliance voltage. High impedance electromechanical ground (earth) overcurrent relays have always been difficult to test at high multiples of tap due to the winding impedance and saturation characteristics. The peak voltage required can exceed the maximum output voltage of one SMRT36 current output channel, depending on the required test current. By connecting two current outputs in series, the compliance voltage is doubled, providing higher test currents through the load. There are two methods to series currents together. For the floating output (F or C) models connect the two current amplifiers in a "push-push" configuration as shown in the following figure.

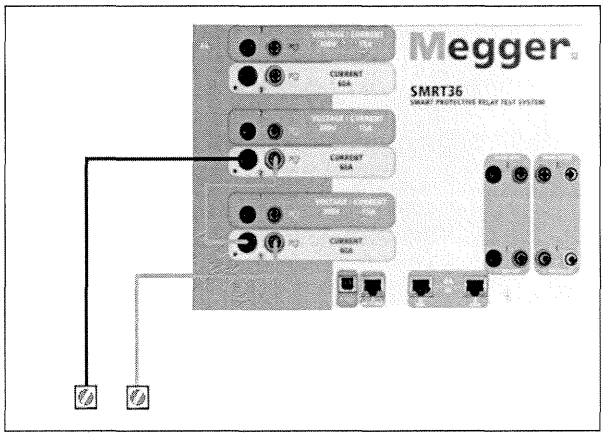

Figure 79 Series Two Currents with Floating Output Unit

The two current channels that are to be used in series set each to the same test current magnitude, and phase angle. Select both current channels and turn output on by pressing or clicking on the ALL ON/OFF button. Always use the ALL ON/OFF button to turn both current channels on and off together. For manually ramping outputs, if using the PC version of the STVI software the ⇧⇩ buttons will be displayed. If using an STVI controller the Control Knob icon will be displayed. Pressing either of these two will present the user with a window to select the desired level of increment for manually ramping the outputs, the desired channel(s) to be ramped, and what is to be adjusted (amplitude, phase angle or frequency).

To series the current channels of the common grounded returns (G or E) unit, perform the following:

Using the current channel test leads, connect the Red output terminals of the two current channels to the relay under test. Even though the two returns associated with the current channels are connected internally with the common returns, place a jumper as shown. This will insure that the internal common leads will not be damaged.

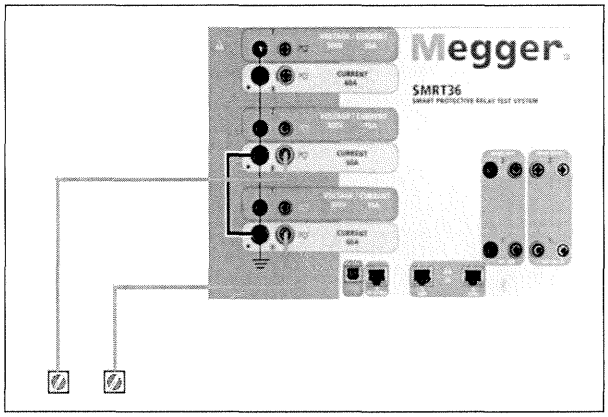

Figure 80 Series of Two Current Channels with Grounded Common Returns

NOTE: One current channel should be set to 0 degrees and the other current channel should be set to a phase angle of 180 degrees so that the two compliance voltages add across the load. DO NOT attempt to series more than two currents together on a grounded common returns unit.

The two current channels that are to be used in series set each to the same test current magnitude. Initiate the two current channels simultaneously by pressing the ALL ON/OFF button. Always use the ALL ON/OFF button to turn both current channels on and off together. For manually ramping outputs, if using the PC version of the STVI software the ⇧⇩ buttons will be displayed. If using an STVI controller the Control Knob icon will be displayed. Pressing either of these two will present the user with a window to select the desired level of increment for manually ramping the outputs, the desired channel(s) to be ramped, and what is to be adjusted (amplitude, phase angle or frequency).

4.0 Voltage Sources

4.1 Outputs Summed Together

Two voltage channels may be used to sum the voltage outputs to obtain higher than rated voltage provided the load is ungrounded. Connect the load between the voltage channel posts, set V_1 Phase to 0° and set V_2 Phase to 180°. The voltage outputs will add so the total voltage is the sum of the two voltage amplitudes, V_1 and V_2 as can be seen in the following figures.

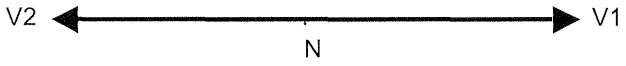

Note: If an **F** or **C** appears in the 5th digit of the style identification number (i.e. 30P1**F**0A0S1) the voltage returns are floating (isolated from each other and ground). Those units with a style number **G** or **E** the voltage returns are common together internally and connected to earth ground.

For the floating common units the user must connect the associated voltage channels black common returns together, when series operation is required (see the following figures). Remove external commons when testing is completed. DO NOT attempt to series more than two voltage channels together.

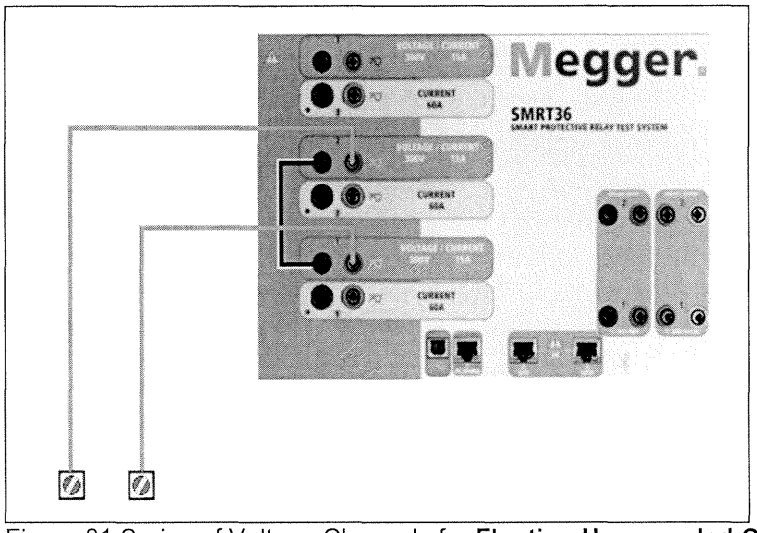

Figure 81 Series of Voltage Channels for **Floating Ungrounded Common Returns**

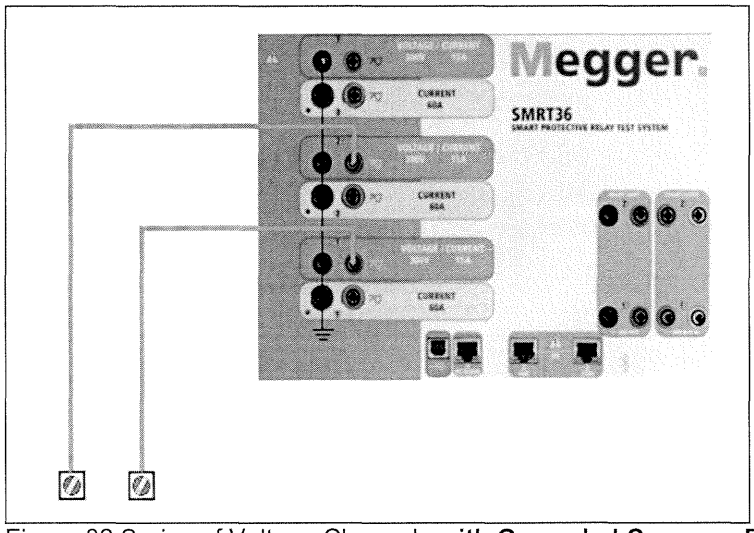

Figure 82 Series of Voltage Channels **with Grounded Common Returns**

4.2 3Ø, 3-Wire, Open-Delta and T-Connection

4.2.1 Balanced Open Delta

Two methods of obtaining a three-phase, three-wire voltage source are available. The Open-Delta configuration is the easier to use when a balanced three-phase source is required because the amplitude and phase relationship can be set directly. No calculations are necessary.

When using the Open-Delta configuration, it is suggested to use voltage channel #1, designated V_1, and voltage channel #2, designated V_2, while the COMMON binding post is designated V_g. With this arrangement, the magnitude and phase angle of the potentials can be easily calculated and set. For the balanced three-phase condition V_{1g} and V_{2g} are equal in magnitude and separated by an angle of 60°. This is done by setting the V_1 and V_2 potentials equal in magnitude, setting 0° on V_1 and 300° (60 degrees leading assuming that the default phase rotation is set to 360 Lag) on V_2, see the following figures.

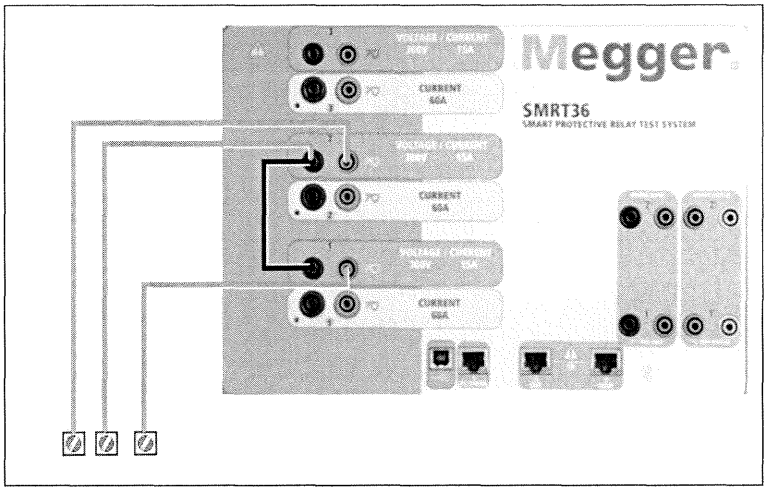

Figure 83 Three Phase Open Delta Connections

When using the Open-Delta Configuration to set up a phase-to-phase fault, calculations' using the Law of Cosines is required to calculate amplitude and phase relationships. (See discussion under T-Connection for simulating unbalanced, phase-to-phase faults without need for calculations.)

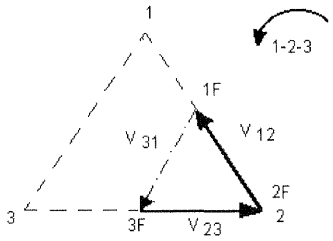

Balanced 3q - Open Delta Connection
If V_f equals the desired test potential, then:
Set $V_1 = V_f \angle 0^\circ$
Set $V_2 = V_f \angle 300^\circ$ Lagging (60° Leading)

4.2.1.1 Unbalanced Open Delta

When setting up an Unbalanced Open-Delta configuration, the desired phase-to-phase fault voltage, V_{1f} is set using voltage channel #1 with its phase angle set to 0°. Phase-to-phase voltage V_{2f} and its phase angle relationship for voltage channel #2, must be calculated using the Law of Cosines; where For any triangle the following formula applies:

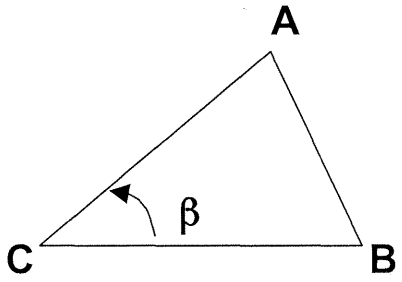

$$AB^2 = AC^2 + BC^2 - 2 \times AB \times BC \times \cos ß.$$

The next figure shows the phase relationships between voltages and an example of the necessary calculation. For convenience the amplitude and the phase angle settings for the typical V_f fault magnitudes are tabulated.

From the Law of Cosines

$$\theta = \arccos\left(\frac{V_{12}}{2 * V_{23}}\right)$$

$$V_{23}^2 = \left(\frac{V_{12}}{2}\right)^2 + \left(\frac{\sqrt{3}}{2} * 120\right)^2$$

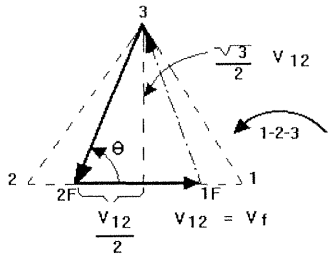

Figure 84 Open-Delta Unbalanced phase-to-phase Fault Voltages

Settings for Typical Phase-to-Phase Fault Voltages

$V_{12} = V_{fault}$

V_{12}	1	5	10	15	20	25	30	35	40	45	50	55	60	65	70
V_{23}	104	104	104	104	104	105	105	105	106	106	106	108	108	109	110
At θ° Lag	270	271	273	274	275	277	278	280	281	282	284	285	286	287	289

4.2.2 T Connection

The second method of obtaining a three-phase, three-wire voltage source is the so-called T-Connection. The method, shown in the following figure, is easier to use when obtaining an unbalanced, phase - to -phase fault simulation since it eliminates calculations. To reduce confusion when using the T-Connection, the voltage output #1 is designated V_a and its phase angle set at 0°, voltage output #2 is designated V_b and its phase angle set for 180°, and voltage output #3 is designated V_c and its phase angle is set for 270. Any combination of balanced three phase faults or unbalanced phase-to-phase fault conditions can be easily simulated. The following figure indicates these phase relationships.

! NOTE: This method should not be used for very low fault voltages, or used on solid state relays that may be sensitive to this type of connection (i.e. 5 volts or less, or for testing ABB or Westinghouse type SKD relays).

$$V_f = Desired\ Fault\ Voltage$$

$$V_a = \frac{1}{2}V_f \angle 0°$$

$$V_b = \frac{1}{2}V_f \angle 180°$$

$$V_c = \frac{\sqrt{3}}{2}\ 120\ or\ V_c = 104V \angle 270°$$

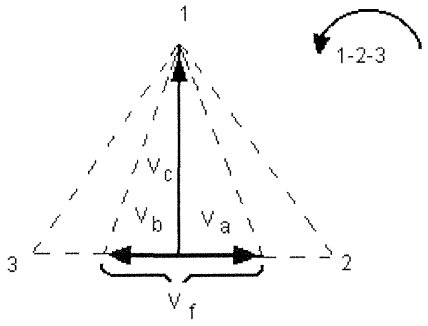

Balanced or Unbalanced Fault T-Connection

4.3 3Ø, 4-Wire, Y-Connection

A three-phase, four-wire potential system can be provided using three output modules. The vector relationships are referenced below. This Y-Connection has the advantage of being able to supply a higher line-to-line voltage (1.73 x phase-to-neutral voltage). It is ideally suited for simulating phase-to-ground faults. Voltage channel #1 is designated as V_a with its phase relationship set for 0°. Voltage channel #2 is then designated as V_b and phase angle set for 120°. Finally, voltage channel #3 is designated V_c and phase angle set for 240° (for a 1-2-3 counter clockwise rotation). V_a, V_b and V_c are connected to the voltage potential binding posts on the respective test sets.

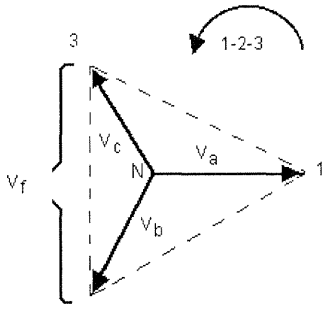

Balanced 3 q, 4 Wire Y-Connection

$$V_f = \textit{Desired Fault Voltage}$$

$$V_a = \frac{\sqrt{3}}{3} V_f \angle 0°$$

$$V_b = \frac{\sqrt{3}}{3} V_f \angle 120°$$

$$V_c = \frac{\sqrt{3}}{3} V_f \angle 240°$$

Note: If an **F** or **C** appears in the 5th digit of the style identification number (i.e. 30P1**F**0A0S1) the voltage returns are floating (isolated from each other and ground). Those units with a style number **G** or **E** the voltage returns are common together internally and connected to earth ground.

If using the sleeved multi-lead voltage test leads (part number 2001-395), all of the black return leads are interconnected together inside the sleeve so they will all share the return together. Therefore, only one return lead is provided on the relay connection side of the sleeved leads (similar to the connections in the following figure).

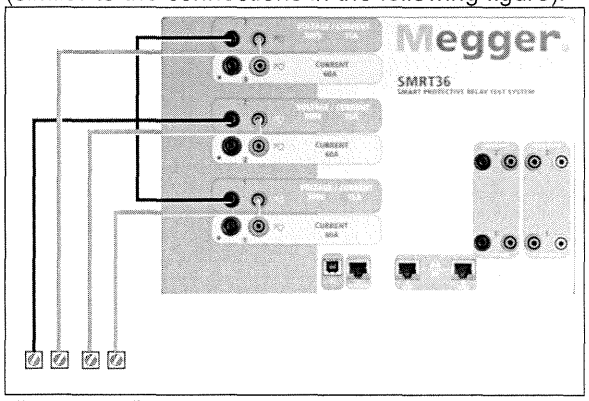

Figure 85 Three Phase Four Wire Test Connections

For the earth grounded common return (G or E) units, there is an internal common ground between the voltage and current channel return terminals. Therefore, only one return lead is

required for the voltage channels. If using separate individual test leads, for the floating common units the user must connect the associated voltage channels black common returns together as shown above.

4.0 Updating SMRT36 Firmware

Download Firmware Upgrade via Megger Website

To download the newest firmware from the Megger website,

1. Go to WWW.Megger.com
2. **Log In**.
3. Go to **Software Downloads**
4. Click on **SMRT**
5. You will see instructions to enter the serial number of the SMRT unit, and then click on **Continue**. The serial number is 12 digits long. Make sure you enter all 12 digits. Then click on **Firmware Version #.##**. The firmware will be downloaded onto your PC as a zip file. Unzip the file, **Select All** files, and **Copy** to a USB memory stick[3] (use a 2 GB or smaller stick), or create a file on your PC for storage to unzip or extract to a file.

Firmware Upgrade via STVI USB Port

Download the firmware to your PC from the Megger website as outlined above; see Firmware Upgrade via Megger Website. Unzip the file, **Select All** files, and **Copy** to a USB memory stick. Interconnect the STVI to the SMRT unit via the Ethernet cable, and power up the test system. Then insert the USB stick into the USB port on the top of the STVI. To perform the upgrade, from the STVI **Configuration Screen** press the **Update Firmware** button. The SMRT36 will automatically look to see if the firmware is a newer version of Software /Firmware, and if it is, it will automatically download the firmware into the unit.

5.0 Warranty Statement

Megger warrants the product is free of defects in material and workmanship for a period of one (1) year from date of shipment. This warranty is non-transferable. This warranty is limited and shall not apply to equipment that has damage, or cause of defect, due to accident, negligence, and improper operation, faulty installation by the purchaser, or improper service or repair by any person, company or corporation not authorized by Megger. Megger will, at its' option, either repair or replace those parts and/or materials it deems to be defective.

The warranty is in lieu of all other warranties, either expressed or implied on the part of Megger and in no event shall Megger be liable for the consequential damages due to the breach thereof.

5.1 Preventive Maintenance

The unit utilizes surface mount technology (SMT) and other components which require little or no service except for routine cleaning, etc. The unit should be serviced in a clean atmosphere away from energized electrical circuits.

---

[3] You can use the STVI USB port to update the SMRT firmware using a memory stick (2 GB or ***smaller***) with the firmware on it. The STVI USB port does not support memory sticks larger than 2 GB.

5.1.1 Examine the unit every six months for:

Dust and Dirt	To clean the unit, disconnect the power cord from the unit. Never use spray liquids or industrial cleaners. Some cleaning solvents can damage electrical components, and should never be used. Water and a mild soap may be used. Use a lightly damp cloth (not dripping wet) to wipe off the unit. A dirty heat sink can cause thermal overloads. Remove dust with dry, low pressure, compressed air. Either remove the module from the chassis or simply apply air forcing the dust away from the heat sink through the sides of the unit.
Moisture	Remove moisture as much as possible by putting the test set in a warm, dry environment.

5.3 Service and Repair Instructions

To save turn-around time and reduce costs, SMRT36 was designed as a modular unit. In most cases, if any one module should experience a problem it should not cause the test system to be down. Basic troubleshooting information has been provided to guide the technician to the possible source of a problem.

Since SMRT36 uses Surface Mount Technology, most repairs of the individual modules are beyond the scope of the basic troubleshooting guide, and should be referred to the Service Department at Megger or handled through the Megger Representative.

If the unit is still within the original warranty period, or limited warranty period following factory servicing, **the factory must be contacted before attempting any repairs or the warranty will be void.**

5.3.1 Basic Troubleshooting

The troubleshooting information relies on the technician to have a good understanding of the operation of the unit. If the technician is unfamiliar with the unit, he or she should not attempt to repair. The technician should contact the factory before attempting repairs. Provide the Megger part number for the part or assembly in question and the serial number of the SMRT36 when making inquiries.

WARNING It is necessary to energize the SMRT36 to properly troubleshoot some of the modules. The technician must take all applicable safety precautions for working near energized circuits.

NOTES

Before suspecting a failure in the SMRT36, review the General Description and Operation sections to ensure that the problem is not a result of operating error.

Preliminary testing of the SMRT36 within its specified limits can help determine if a malfunction actually exists, identify the type of malfunction and define the general area of the failure.

Common causes of malfunctions, other than improper operation, are incorrect power input (voltage above or below specified limits), incorrect test signal voltages applied to

the Binary Input gates (outside of the specified AC/DC Applied/Removed limits), and contact or circuit resistance too great for the Dry Contact gates to operate properly on the Monitor/Start/Stop gates. Typical malfunctions for the VI-Gen amplifiers are external short circuits on the voltage output and open circuits on the current output. The battery simulator and VI-Gen voltage and current outputs can be easily checked using a voltmeter and ammeter.

NOTE: There are three different modules that make up a SMRT36; the System Board (front panel), VIGEN'S (VIGEN#1, and #2) and VIGEN LITE (VIGEN #3). Most problems can be easily resolved by replacement of one of these modules, see section **5.3.1.2.1 Replacing a VIGEN** for instructions on how to replace a VIGEN module. Proper ESD procedures should be followed when handling any SMRT36 module. Failure to do so, may damage sensitive parts.

5.3.1.1 Power Input

Input voltage affects the whole unit and may or may not cause permanent damage if voltage is incorrect. These problems can often be corrected by simply using a better source of input power. For units with an **F** or **G** appearing in the 5th digit of the style identification number (i.e. 30P1**F**0A0S1) the rated voltage limit is auto-selectable from 100 to 240 volts, ± 10 %, 47 to 63 Hz. For units with a **C** or **E** appearing in the 5th digit of the style identification number (i.e. 30P1**C**0A0S1) the rated voltage limit is auto-selectable from 220 to 240 volts, ± 10 %, 47 to 63 Hz.

Some symptoms are as follows:

1. Low voltage: Erratic operation, no output, input power circuit breaker operation.

2. High voltage: Circuit breaker operation, power supply failure in Input Power Module.

5.3.1.2 VIGEN Input Power, Communication and Control

Basic troubleshooting of the input power is as follows.

1. No power: Check the ON/OFF circuit breaker. Does the ON/OFF switch light up? If it does not light up, then power is not getting to the unit. Check power source and line cord. If it lights up then the power is getting to the unit. Check the VIGEN power cable connection.

CAUTION: Turn off main power and unplug line cord before attempting to work on any module. Observe proper Electro Static Discharge procedures.

A. Disconnect the power cord from the unit.

B. Remove the two Phillip head screws on each side hold on the top cover; the first top screw and the fourth screw, see the following figure.

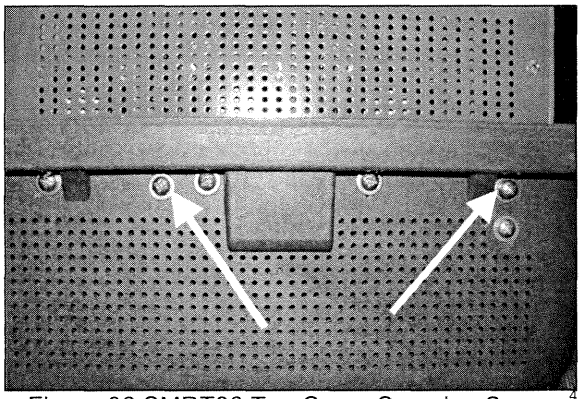

Figure 86 SMRT36 Top Cover Securing Screws[4]

B. Remove the front center screw on the front panel, and the two screws (one on each side) of the top cover that connects the top cover to the front panel, see the following figure.

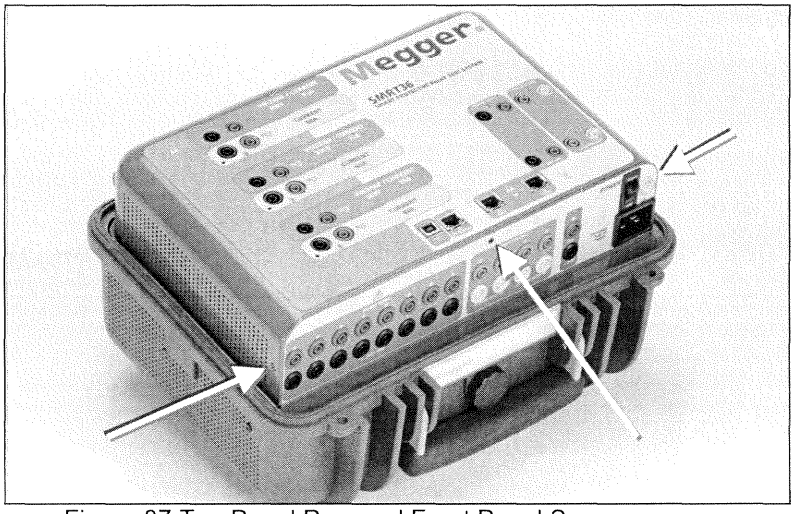

Figure 87 Top Panel Removal Front Panel Screws

D. To remove the top cover from the enclosure will require an awl, or a small nail punch, and hard flat plastic wedge (like a plastic ruler). Cover the enclosure lip and ridge with the plastic ruler to prevent damage to the enclosure ridge. Place the awl into a vent hole and leverage the cover up slightly on each side, see the following figure.

[4] The number of screws that appear of the sides may vary depending on the configuration and design of the top cover (units beginning in 2012 have a different top cover design).

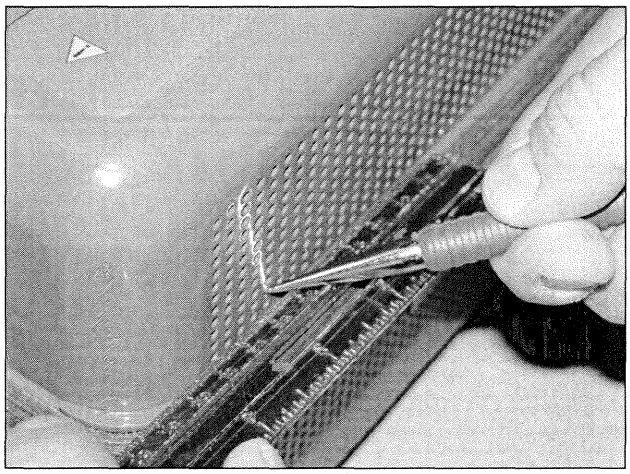

Figure 88 Leveraging the cover from the enclosure

Continue to alternately leverage the cover up until you can work the cover out with your hands by grasping the back of the cover with one hand and gently, yet firmly, pull the cover up from the unit slightly. Then, alternately move the front side up slightly working the cover out of the enclosure. It is tight fit so work slowly and carefully.

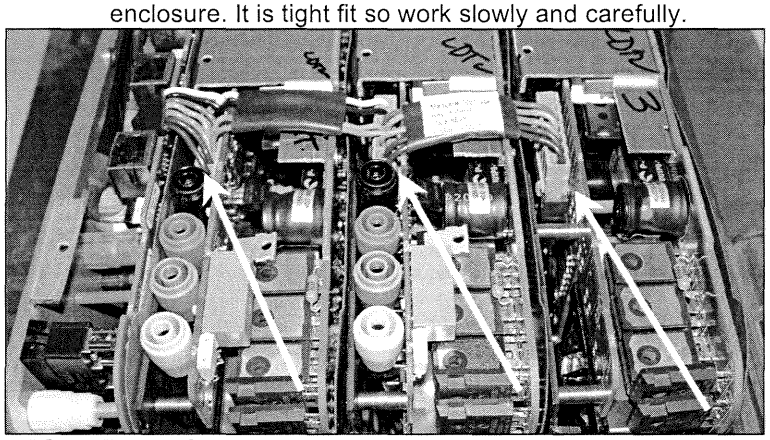

Figure 89 VIGEN Power Connectors

Check the cables as shown. If the cables are properly connected, then remove and replace the VIGEN per 1.5.3.1.2.1.

2. Erratic Manual Control

Individual Output Module communication cable is not properly connected thus cannot receive proper commands. Look through the air intake holes on the left side of the unit to observe the VI-Gen LED's. Each module has some green LED's that blink. These are associated with the Ethernet communications. If there are no blinking LED's on one or more modules, then the module is not communicating. Remove the top cover using the procedure described above.

⚠ **CAUTION: Turn off main power and unplug line cord before attempting to reseat any cables. Observe proper ESD procedure.**

Locate the communication Ethernet cables on the left side, see the following figure.

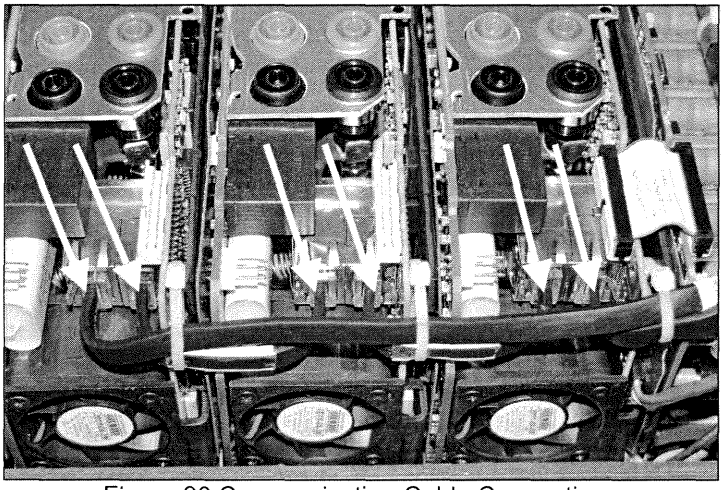

Figure 90 Communication Cable Connections

Carefully disconnect each cable and reconnect to insure the cable locks into position. Note: In order to reseat each communication cable the small wire-ties will need to be removed (replacement wire-ties will be required after reseating the cables).

⚠ **CAUTION: Failure to replace wire-ties may pinch the communication cables upon replacement of the top cover.**

After reseating the cables, reinstalling the top cover assembly, reconnect the power cord and power up the unit. Look through the air intake holes on the left side of the unit to observe the VI-Gen LED's. If there is still no blinking LED's on one or more modules, and then replace the VI-Gen Module(s) that are not communicating. If they are not lit, then remove the power cord and the top cover and check the power connection cables to each VIGEN as described in Step 1 above.

5.3.1.2.1 Replacing a VIGEN

1. To remove the VIGEN, on early units there are three Phillip head screws that hold in the VIGEN, one on each side and one on the bottom of the unit. Newer generation units only have one screw on the bottom.
2. Remove the power connection cable as shown in Figure 73 above.
3. Disconnect the communication cables as described for Figure 74 above.

Note the small cable that connects the front panel board to VIGEN 1 needs to be carefully removed prior to removing VIGEN1, see the following figure.

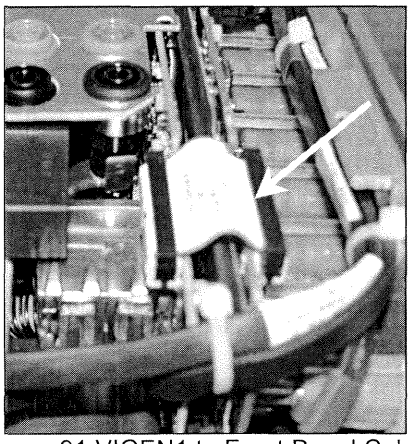

Figure 91 VIGEN1 to Front Panel Cable

4. Carefully remove the VIGEN module from the chassis.
5. Install replacement VIGEN.

⚠ **Be careful when replacing the module as it is a tight fit, and it is possible to damage components upon extraction or installation.**

6. Replace the Phillip head screw(s) that hold in the VIGEN.
7. Reconnect the power connection cable as shown in Figure 89 above.
8. Reconnect the communication cables as shown in Figure 90 above. Replacement wire-ties will be required after reseating the cables.

⚠ **CAUTION: Failure to replace wire-ties may pinch the communication cables upon replacement of the top cover.**

9. If VIGEN #1 was replaced, reconnect the front panel cable as shown in Figure 91 above.

10. Reinstall the top cover. Reconnect the power cord and power up the unit.

5.3.1.3 Binary Inputs, Binary Outputs and Battery Simulator (P Option Unit)

If all the items external of the Timer assembly are in proper order, then the problem exists within the Binary Input / Output assembly itself.

Some basic troubleshooting can pinpoint problems to the approximate cause.

Binary Inputs - Basic troubleshooting is as follows:

1. Timer does not stop:
Jumper the appropriate Binary Input terminals manually. If LED above the selected input lights, check the Binary Input setup screen to verify that the selected binary input is properly setup as a Timer stop post. Check Timer stop settings as N.O. (Normally Open) to close, and Latch On. If LED does not light up, the Binary Input will need to be repaired or replaced.

2. Counting errors:
AC applied or removed Stop signals can create, what appears to be poor repeatability, an inaccuracy or a malfunction in the Timer. The lower the voltage level, the more serious the "error" will be. What appears to be an error, however, is actually a variation in the point on the sine wave at which the voltage is great enough to cause the gate

circuit to operate. If the circuit used for the timing test has a low AC voltage and the point at which the contact in the test circuit opens or closes, is at or close to zero on the sine wave, the period of time before the voltage level will be high enough to trigger the gate circuit can be as much as 4 milliseconds. The total timing variation can be as much as 8 milliseconds. The shorter the duration of the timing test, the more significant the variation becomes. Therefore, if small timing variations would present a problem, it is recommended that an AC voltage of 115 volts or above or a DC voltage be used for voltage applied/removed test selections.

When the SMRT36 Timer calibration is being tested, the AC voltage variable is often overlooked. This is particularly true when the Timer is compared to a counter and the two are triggered simultaneously with an electronic switch. For best results, a DC voltage should be used to eliminate the variable. If testing the AC voltage Timer Stop characteristics is desired, then the Stop signal must be triggered at the same point on the sine wave to assure that the gate signal will be repeatable. Ideally, the signal should be at a point near peak in the positive direction. In addition, the specified rms AC voltage values for the various Stop control selections must be adhered to.

Another source of apparent "error" can be the programmable de-bounce feature. If using electro-mechanical contacts for stopping the Timer, and if those contacts have a tendency to bounce, there could be a difference between an external standard timer and the SMRT36 Timer, depending on the programmed de-bounce period set in the SMRT unit. To determine the programmed value, look at the Binary Input Setup Screen and see what the De-bounce setting value is.

If a timing error or variation persists after all the suspected causes of error have been eliminated, then it is possible that the Binary Input circuit is malfunctioning. Contact factory for return instructions.

Binary Outputs - Basic troubleshooting is as follows:

Binary Output LED is ON but output contacts ***not closed***:
Using a continuity tester check to see if output circuit is open circuited. If circuit is open then it is possible that the internal surface mounted fuse element has been blown. Note: an optional in-line fused test lead Part Number: 568026 are available to provide protection from switching too high current, see SMRT Ordering Information under Optional Additional Accessories. The unit will need to be returned to the factory for further inspection and repair.

! Contact the factory for a Repair Authorization Number and return instructions if service is required. A Repair Authorization (RA) number will be assigned for proper handling of the unit when it arrives at the factory. Any non-warranty repair cost incurred for the repair or replacement of parts and/or materials shall be the responsibility of the purchaser.

Provide the factory with model number, Unit serial number, serial number of VI-Gen if appropriate, nature of the problem or service, return address, your name, and how to contact you should the factory need to discuss the service request.

You may need to provide a purchase order number, cost limit, billing, and return shipping instructions. If an estimate is requested, provide the name and contact information.

6.1 Preparation for Reshipment

Save the original shipping container for future use. The shipping container is designed to withstand the rigors of shipping via a common commercial carrier. For example, you may wish to reship your unit to Megger for an annual calibration recertification.

Pack the equipment appropriately to prevent damage during shipment. If a reusable container is utilized, the unit will be returned in the same shipping container if it is in suitable condition.

Add the Return Authorization Number to the address label of the shipping container for proper identification and quicker handling.

NOTE: Ship the equipment without nonessential items such as test leads, etc. These items are not needed by the factory to perform service.

Megger®

Addendum B

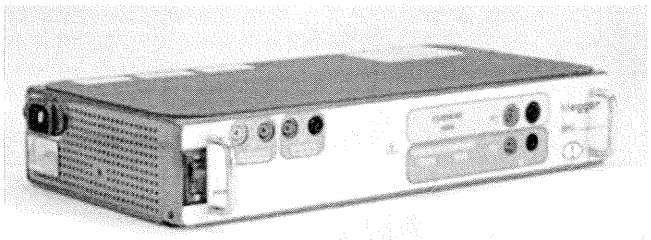

*Standard enclosure model shown

Model SMRT1

Megger Single Phase Relay Tester

SAFETY PRECAUTIONS

WARNING:
VOLTAGES GENERATED BY THIS INSTRUMENT CAN BE HAZARDOUS

This instrument has been designed for operator safety; however, no design can completely protect against incorrect use. Electrical circuits are dangerous and can be lethal when lack of caution and poor safety practices are used. There are several standard safety precautions that should be taken by the operator. Where applicable, IEC safety markings have been placed on the instrument to notify the operator to refer to the user manual for instructions on correct use or safety related topics. Refer to the following table of symbols and definitions.

Symbol	Description
	Direct Current
	Alternating Current
	Both direct and alternating current
	Earth (ground) Terminal. There is a common chassis ground terminal located on the front panel (see Front panel under Description of Controls.
	Protective Conductor Terminal
	Frame or Chassis Terminal
	On (Supply)
	Off (Supply)
	Caution, risk of electric shock
	Caution (refer to accompanying documents)

⚠ WARNING: Under no circumstances should the operator or technician attempt to open or service this instrument while connected to a power source. Lethal voltages are present and may cause serious injury or death!

SAFETY PRECAUTIONS (Continued)

The following are some specific safety related items associated with the SMRT test system.

Read and understand all safety precautions and operation instructions before attempting to use this unit.

The purpose of this equipment is limited to use as described in this instruction manual. Should a situation arise that is not covered in the general or specific safety precaution please contact Megger regional representative or Megger, Dallas Texas.

Safety is the responsibility of the user. Misuse of this equipment can be extremely dangerous.

Always start with the power OFF, before connecting the power cord. Make sure outputs are off before attempting to make test connections.

Never connect the test set to energized equipment.

Always use properly insulated test leads. The optional test leads are rated for the continuous output ratings of the test system, and should be properly used and cared for. DO NOT use cracked or broken test leads.

Always turn the test system off before disconnecting the power cord.

DO NOT attempt to use the unit without a safety ground connected.

DO NOT attempt to use the unit if the power cord ground prong is broken or missing.

DO NOT use the test set in an explosive atmosphere.

The instrument must only be used by suitably trained and competent persons.

Observe all safety warnings marked on the equipment.

For safety related or other important topics, like the statement below, will be notated with the adjoined symbol. Read the topic carefully as it may relate either to the safe operation of the test system or the safety of the operator.

Under no circumstances should the operator put their hand or tools inside the test system chassis area with the test system connected to a power source. Lethal voltages are present and may cause serious injury or death!

1.0 Operation

The unit's design is a "modular" concept. All inputs and outputs are clearly marked and logically grouped so continual reference to the instruction manual should not be necessary once the operator is acquainted with the test system.

1.1 General Description

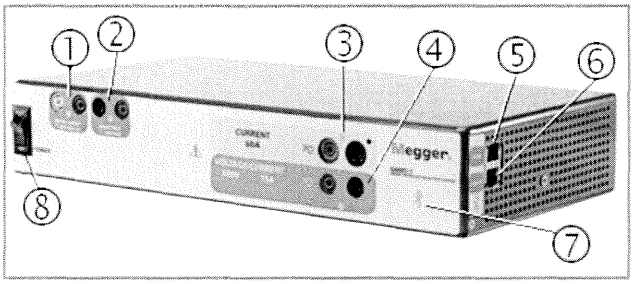

Figure 92 SMRT1 (Standard unit pictured)

1.1.1 Front Panel

8. ***Binary Output*** – the Binary Output can be configured as Normally Open or Normally Closed contacts providing logic to the device under test. The Binary Output can switch up to 300 VAC or 250 VDC with 8 Amp continuous. The programmable wait duration is from 1 millisecond to 10,000 milliseconds.

9. ***Binary Input*** –The Binary Input will accept a voltage range of 5 to 300 VAC, or 5 to 250 VDC, or dry Normally Open / Normally Closed contacts.

10. ***Current Channel Output*** – For more details on the VIGEN output capabilities see section 1.4.

11. ***Voltage Channel Output*** – For more details on the VIGEN output capabilities see section 1.4.

12. ***PC/ IN*** Ethernet Port is a 10/100BaseTX port, and is the primary PC connection port. This port supports MDI/MDI-X auto cross over configuration, which means both standard and "crossover" Ethernet cables may be used. This port provides the optimal method for downloading EMTP files, DFR streaming, and updating the unit's firmware as required. The SMRT comes standard with a crossover cable. This port may also be used for multiple unit operation, the unit providing the 61850/OUT link is providing the master phase reference to all units "downstream".

13. ***61850 / OUT*** Ethernet Port is a 10/100BaseTX port, and is primarily used to interconnect multiple SMRT units together for synchronous multi-unit operation. With the PC connected to the PC/ IN Port, the SMRT1 61850 / OUT port may be connected to another SMRT unit PC / IN port "downstream" providing phase synchronization through the Ethernet port. This port may also be used to provide access to the substation IEC 61850 network to receive and send GOSSE messages.

14. **Bluetooth** wireless port – this port is optional, and provides a wireless interface control with a PC. It also provides isolation between the IEC 61850 bus and the user PC.

15. ***POWER ON/OFF Switch*** – used to switch unit on and off. The switch illuminates when power is on.

1.1.2 Side Panel:

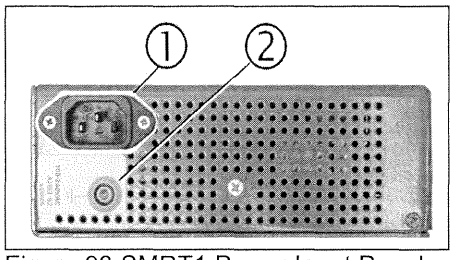

Figure 93 SMRT1 Power Input Panel

1. ***Incoming Power / Line Cord*** – the input line cord, ground terminal, are mounted on the side panel of the test set.

Input Line Cord

⚠

The test set is equipped with a line cord, which connects to the male connector on the side panel. Verify the input voltage before connecting the line cord to the power source.

NOTE: The unit can be powered from an input source with a rating of 100 VAC to 240 VAC, 50/60 Hz. The unit automatically adjusts to the available power if it is within the specified range.

2. ***Earth Ground Jack*** – use this terminal to connect chassis ground to earth ground.

⚠ ⏚

A chassis ground (earth) point on the front panel is provided as an additional safety ground.

1.1.3 Rack Mount Enclosure Rear Panel:

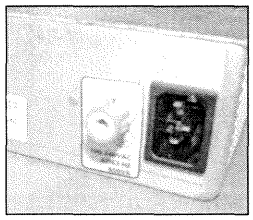
Figure 94 SMRT1 Rack Mount Back Panel Power Input

1. ***Incoming Power / Line Cord*** – the input line cord, ground terminal, are mounted on the back panel of the test set.

Input Line Cord

⚠

The test set is equipped with a line cord; see the accessory kit, which connects to the male plug on the back panel. Verify the input voltage before connecting the line cord to the power source.

NOTE: The unit can be powered from an input source with a rating of 100 VAC to 240 VAC. The unit automatically adjusts to the available power if it is within the specified range.

2. ***Earth Ground Jack*** – use this terminal to connect chassis ground to earth ground.

⏚ ⚠

A chassis ground (earth) point on the back panel is provided as an additional safety ground.

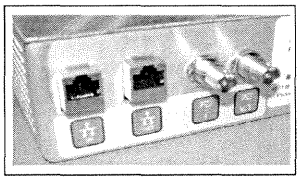

Figure 95 SMRT1 Rack Mount Back Panel Signal and Communication Ports

1. ***IN*** Ethernet Port is a 10/100BaseTX port, and is the primary PC connection port. This port supports MDI/MDI-X auto cross over configuration, which means both standard and "crossover" Ethernet cables may be used. This port provides the optimal method for downloading EMTP files, DFR streaming, and updating the unit's firmware as required. The SMRT comes standard with a crossover cable. This port may also be used for multiple unit operation, the unit providing the OUT link is providing the master phase reference to all units "downstream".

2. ***OUT*** Ethernet Port is a 10/100BaseTX port, and is primarily used to interconnect multiple SMRT units together for synchronous multi-unit operation. With the PC connected to the IN Port, the SMRT1 OUT port may be connected to another SMRT unit IN port "downstream" providing phase synchronization through the Ethernet port. This port may also be used to provide access to the substation IEC 61850 network to receive and send GOOSE messages.

3. ***External Amplifier BNC Inputs*** – There are two BNC connectors labeled I and V/I on the back panel. These connectors are used to amplify an external analog signal using the SMRT amplifiers. Application of ± 10 Volts Peak will provide Full Scale output (Range dependent) from the selected output.

⚠ **CAUTION**: DO NOT APPLY MORE THAN ± 10 VOLTS PEAK TO THE EXT INPUT TERMINALS. APPLICATIION OF MORE THAN 10 VOLTS PEAK MAY DAMAGE THE AMPLIFIER.

1.2 Input Power

The input voltage may be from 100 to 240 VAC, 50/60 Hertz, 600VA. The input is protected by an ON/OFF switch / circuit breaker.

1.2.1. Input Power Cord

Depending on the country, the power cord can come with a NEMA 5-15 male connector, a CEE 7/7 Schuko two prong connector, a UK power cord, or with International Color Coded pig-tail wires (light blue, brown and green with yellow stripe) with the insulation jacket stripped ready for installation of the appropriate male connector.

Model SMRT1 10NXXX**A**XXX comes with a North American power cord (part number 620000).

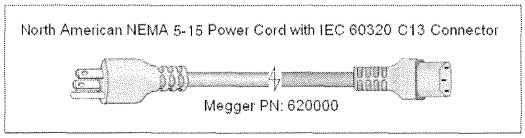

Model SMRT1 10NXXX**E**XXX comes with a Continental Europe power cord (part number 50425).

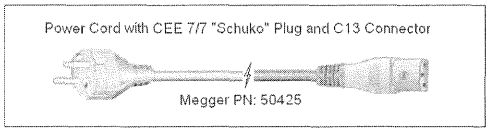

Model SMRT1 10NXXX**I**XXX comes with an International Color Code power cord. The cord, part number 15065, is ready for wiring to the appropriate plug (depending on country). The following colors apply, Brown = Line, Blue = Neutral and Green/Yellow = Ground.

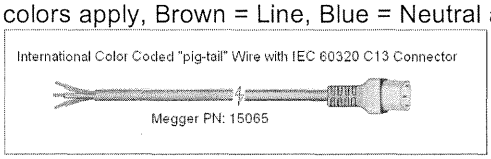

Model SMRT1 10NXXX**U**XXX comes with a UK power cord (part number 90002-989).

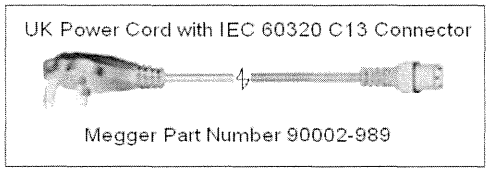

1.3 Voltage - Current Generators

Voltage and Current is noted by the red and yellow surrounding each output channel. The voltage channel is denoted by the red color. The current channel is denoted by the yellow color. All outputs are independent from sudden changes in mains voltage and frequency, and are regulated so changes in load impedance do not affect the output. All SMRT1 amplifier outputs are isolated or floating.

1.3.1. Convertible Voltage/Current Amplifier

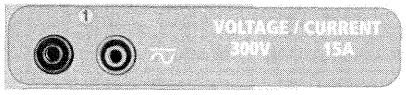

The SMRT PowerV™ voltage amplifier provides a flat power curve from 30 to 150 Volts in the 150V range to permit testing of high current applications such as panel testing.

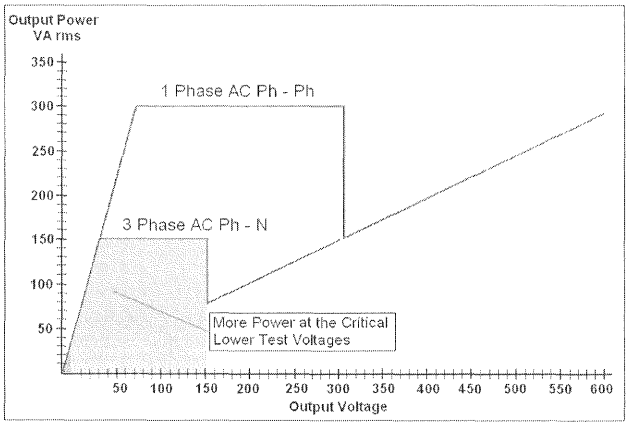

Figure 96 Voltage Amplifier Power Curve

Voltage Range	Power / Current (Max)
30.00V	150VA @ 5.0A
150.00V	150VA Constant Output Power from 30 to 150 Volts
300.00V	150VA @ 0.5A

Voltage Amplifier in Current Mode:
The voltage amplifier is convertible to a current source with the following output capability. Output power ratings are specified in rms values and peak power ratings.

Output Current	Power	Max V	Duty Cycle
5 Amperes	150 VA (212 peak)	30.0 Vrms	Continuous
15 Amperes	120 VA	8.0 Vrms	90 Cycles

The convertible channel in conjunction with the main current channel provides 2 currents for testing current differential relays one phase at a time.

The voltage amplifier output is protected from short circuits and thermally protected against prolonged overloads. In case of a short circuit or a thermal overload, the amplifier will automatically turn off, and if the STVI is connected a message to the user will be displayed indicating which condition exists. If AVTS software is used, a similar message will appear.

1.3.2. Current Amplifier

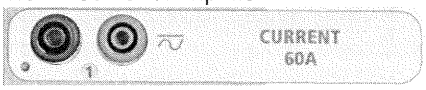

The SMRT current amplifier delivers maximum compliance voltage to the load constantly during the test, and range changing is done automatically, on-the-fly, under load. This insures better test results, saves time by not having to turn the outputs off to change output taps or ranges, and unlike single range current amplifiers insures a higher compliance voltage at lower test currents. Constant power output in many cases eliminates the need to parallel or series current channels together to test high burden relays.

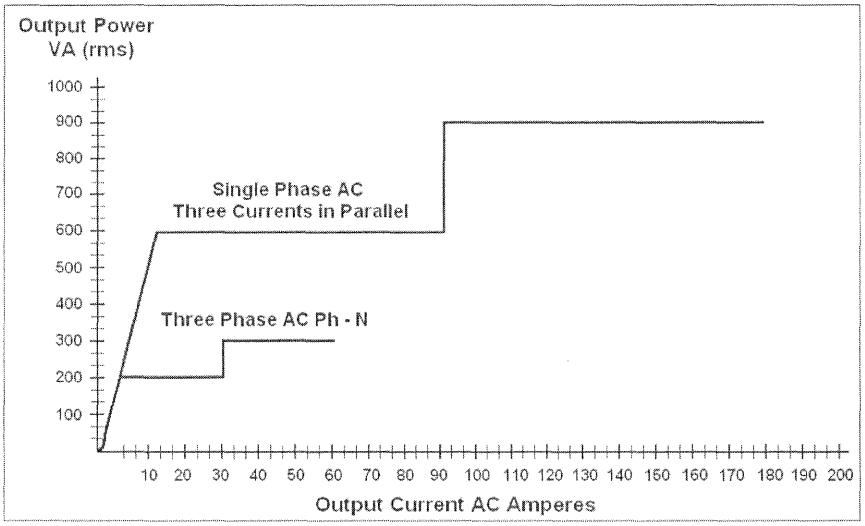

Figure 97 Current Amplifier Power Curves

The following are typical output current and associated available compliance voltage values. The output current and power ratings are specified in AC rms values and peak power ratings. Specified duty cycles are based upon typical room ambient.

Output Current	Power	Max V / Duty Cycle
1 Ampere	15 VA	15.0 Vrms Continuous
4 Amperes	200 VA (282 peak)	50.0 Vrms Continuous
15 Amperes	200 VA (282 peak)	13.4 Vrms Continuous
30 Amperes	200 VA (282 peak)	6.67 Vrms Continuous
60 Amperes	300 VA (424 peak)	5.00 Vrms 90 Cycles
DC 200 Watts		

The current amplifier output is protected from open circuits and thermally protected against prolonged overloads. In case of an open circuit or a thermal overload, the amplifier will automatically turn off, and if the STVI is connected a message to the user will be displayed indicating which condition exists. If AVTS software is used, a similar message will appear.

1.4 Binary Input and Output

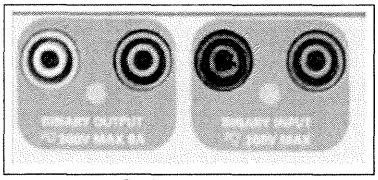

Figure 98 SMRT1 Binary Input and Output

The SMRT1 Binary Input and Output are clearly marked and logically grouped. The Binary Input is used to monitor relay trip contacts for performing pickup and dropout tests as well as for performing timing functions. The Binary Output is used to simulate normally open / normally closed contacts for testing breaker failure schemes, or similar power system operations. In addition they may also be used to switches AC/DC voltages and currents.

1.4.1 Binary Input

The binary input is specifically designed to measure high speed operation of electro-mechanical, solid-state and microprocessor-based protection relays. The binary Input defaults to Monitor Mode, Contact change of state, latched OFF. If using the STVI or STVI software to change a binary input from Contact change of state to Voltage Applied / Removed click on or touch the Input Type window and a sine wave will appear where the Contact icon was indicating. The input is now set for voltage sensing. To change the binary input from Monitor mode to Timer Mode, click on or touch the Use as Monitor button and the display window will change to show Use as Trip, Latched, meaning the binary input is now set to stop the timer upon sensing the first contact closure (if the Input Type is set for contact) or upon sensing voltage if the Input Type is set to Voltage Sensing.

1.4.1.1 Start, Stop, and Monitor Gate

In the SMRT1 the independent, programmable gate circuit permits simple selection of the desired mode for timing or contact monitoring operation.

To monitor operation of the contacts or trip SCR in the device under test, a light is provided for the gate. The gate circuit is isolated for voltage-sensing and can monitor solid-state logic signals. The light will illuminate once contacts close or voltage is applied to the gate.

1.4.1.1.1 Dry Contacts Open

Timer stops or a continuity indicator goes out at the opening of normally closed contacts, or when conduction through a semiconductor device, such as a triac or a transistor, is interrupted.

1.4.1.1.2 Dry Contacts Close

Timer stops or a continuity indicator glows at the closing of the normally open contacts, or upon conduction through a semiconductor device such as a triac or a transistor.

1.4.1.1.3 Application or Removal of AC or DC voltage

The continuity indicator will glow (application) or darkens (removal) upon the application or removal of either an AC or DC voltage. A higher threshold voltage helps to eliminate false triggers due to a noisy source. Lower thresholds allow stopping the timer from TTL voltage signals. The allowable voltage applied is 5 to 300 Volts AC or 5 to 300 Volts DC, current limiting resistors provide protection.

1.4.1.1.4 The Timer can be started when turning on any selected generators.

1.4.1.1.5 The Timer can be started simultaneously with a change in Frequency, Phase Angle, or Amplitude. Also, it can be started simultaneously with a Voltage or Current waveform step.

1.4.2 Binary Output

Binary Output is rated for 300 V at 8 Amps and a maximum of 2000 VA breaking capacity (80 watts DC), with a response time of less than 10ms. The Binary Output can be configured as normally open or normally closed contacts providing logic to the device under test. The programmable wait duration is from 1 millisecond to 10,000 milliseconds.

2.0 SETUP

2.1 Unpack System

Unpack the unit and check for evidence of any shipping damage. If there is any visual damage, immediately notify the freight carrier to make a damage claim, and notify Megger of the damage.

CAUTION:

Potentially lethal voltages may be present on the output terminals. It is highly recommended the operator read the user manual thoroughly and have an understanding of the test set operation prior to turning power on.

2.1.1 Initial Start Up

5. With the Ethernet cable supplied with the unit connect the **IN** Ethernet Port on the SMRT unit to the Ethernet port on the PC Ethernet port. If using the STVI-2, connect the SMRT1 **IN** port to the PoE power supply **Data In** port, and connect the **Data & Power Out** port to the STVI Ethernet port.

6. Before connecting power to the unit, make sure the POWER ON/OFF Switch is in the OFF position (0). Plug the unit line cord into an appropriate power source and turn the POWER ON/OFF Switch to ON (I). As the SMRT unit goes through its power up sequence, in about a minute the STVI power up screen will appear, then the manual start up screen will appear.

2.2 Communication Ports

There are two Ethernet communication ports and an optional Bluetooth wireless port available on the Standard enclosure SMRT1. The Standard enclosure SMRT1 ports are located on the right side on the enclosure. For the Rack Mount unit the ports are located on the back panel. The Rack Mount version does not have the optional Bluetooth wireless port.

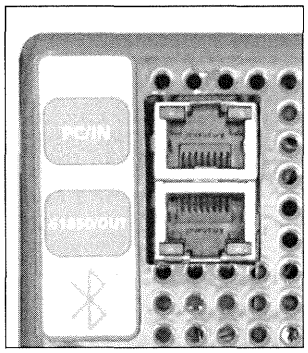

Figure 99 SMRT1 Communication Ports

2.2.1 **PC/IN** Ethernet Port

PC/IN Ethernet Port is a 10/100BaseTX port, and is the primary PC connection port. This port supports MDI/MDI-X auto cross over configuration, which means both standard and "crossover" Ethernet cables may be used. This port provides the optimal method for downloading EMTP files, DFR streaming, and updating the unit's firmware as required. This port may also be used for multiple unit operation, the unit providing the **61850/ OUT** link is providing the master phase reference to all units "downstream". In addition, the port may also used to talk to the SMRT1 unit via a Network.

2.2.1.1 Setting SMRT IP Address for Operation with a PC

With the Ethernet cable supplied with the unit, connect the **PC/IN** Ethernet Port on the SMRT1 unit to the PC Ethernet port. Turn the test set on. As the SMRT unit goes through its power up sequence, in less than a minute the Binary Output LED will flash a number of times (see more information below). When the flashing has stopped the unit is ready. Using the PC version of the STVI software it will auto-detect the SMRT unit connected to the PC. Once it auto-detects the unit, and determines the configuration of the SMRT unit connected, the Manual screen will appear. The unit might not auto detect due to firewall settings. In this case the firewall can be turned off or you can enter the IP address directly using the PowerDB instrument configuration screen by clicking on the Instrument Setup icon on the PowerDB tool bar . From the Instrument Configuration Screen, shown in the following figure, click off the check mark in the Auto Discover Unit box.

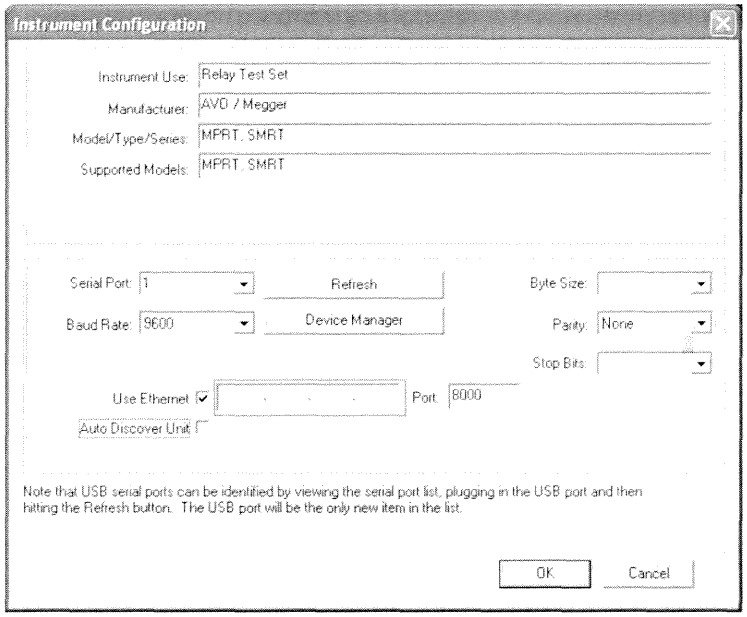

Figure 100 PowerDB Instrument Setup Screen

Here the user can enter the IP address directly into the box highlighted in red. The IP address of the unit can be determined by counting the number of times the Binary Output led flashes at the end of boot up cycle (the address is 169.254. <#flashes>.0). If the unit flashed four times, the address would be 169.254.4.0 . If the unit is on a network with a DHCP server, the user must use the Auto Discovery mode.

2.2.1.2 Setting SMRT IP Address for Networks

⚠ The SMRT1 maybe controlled over a network. This provides remote control of the SMRT1 virtually over any distance allowing one PC to control at least two or three units simultaneously, such as in end to end testing.

[!] Connecting the SMRT1 to a Local Area Network or a Wide Area Network could permit unauthorized operation of the unit.

Through the IN Ethernet port, the SMRT1 integrates into a network just like a PC or server. To use this feature requires the user to setup the IP configuration of the SMRT1 for their LAN. Note that the SMRT1 when turned on will automatically search for and acquire a network address if connected to a network. If it fails to automatically acquire an address check to make sure you are properly connected using a ***standard*** Ethernet cable. ***Do not*** use the cross over Ethernet cable supplied with the test set (a cross over cable is designed for use from your PC to the test set, not to a network). If the unit still fails to acquire an address then there may be other issues. This will probably require assistance from your company's information management department.

2.2.2 **61850/OUT** Ethernet Port

The OUT Ethernet Port is a 10/100BaseTX port, and is used when interconnecting multiple SMRT units together. With the unit IN port connected to a PC, the OUT port would be connected to the "downstream" SMRT unit IN port, providing phase reference to all downstream SMRT units. Note that another SMRT1 IN port could be connected to the OUT port of the upstream SMRT unit, and so on thus creating a multi-phase test system. This port also provides access to the substation IEC 61850 network (when enabled) to receive and send GOOSE messages. The SMRT1 with the IEC 61850 option enabled provides selectable priority, VLAN-ID, and meets the IEC 61850-5 standard Type 1A, Class P 2/3, for high speed trip and reclose simulations.

2.2.2.1 IEC 61850 Operations

For IEC 61850 testing connect the IEC61850/OUT port to the substation bus or to the relay under test to receive and send GOOSE messages. When used with the Megger GOOSE Configurator in the AVTS software, the SMRT1 can provide high speed testing of IEC 61850 relays and substations by subscribing to GOOSE messages and mapping to the binary input. In addition, it can simulate system conditions such as circuit breaker operation by publishing GOOSE messages mapped to the SMRT1 binary output. With the PC connected to the SMRT1 IN port, and running AVTS Megger GOOSE Configurator software, the operator can "sniff" the substation network. If a secure port is desired, with the optional Bluetooth wireless port, use the SMRT1 to "sniff" the network through the IEC61850/OUT port.

3.0 **Current Sources**

3.1 Parallel Operation

Each SMRT current amplifier is capable of providing 30 Amperes continuous, and up to 60 amperes for 1.5 seconds for testing instantaneous trip elements. When more than 30 amps single phase is required for long durations, or 60 Amps for testing instantaneous elements, two or three current channels may be connected in parallel to provide 60 or 90 Amperes continuous, and up to 120 or 180 amperes for short durations.

To parallel the current channels of multiple SMRT1 units, perform the following:

If using the sleeved pair of current test leads (part number 2001-394), connect each current channel to the relay under test (both red and black terminals to the load). Each Megger test lead is rated for 32 Amperes continuous. If using test leads other than those supplied by Megger insure that the wire has sufficient size to carry the test current. See the following figure.

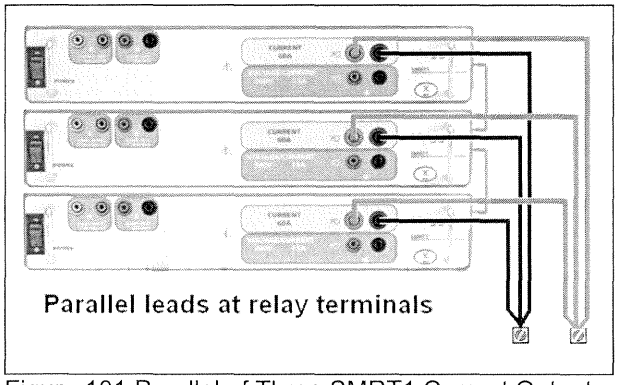

Figure 101 Parallel of Three SMRT1 Current Outputs

3.1.1 Manual Test Screen - Single Phase Up To 180 Ampere

With three SMRT1 interconnected, go to the Configuration screen and select the Operating Mode of ***3 Voltages – 1 Current @ 180 amps***. When you return to the manual test screen there will be one current channel displayed, as shown in the following figure.

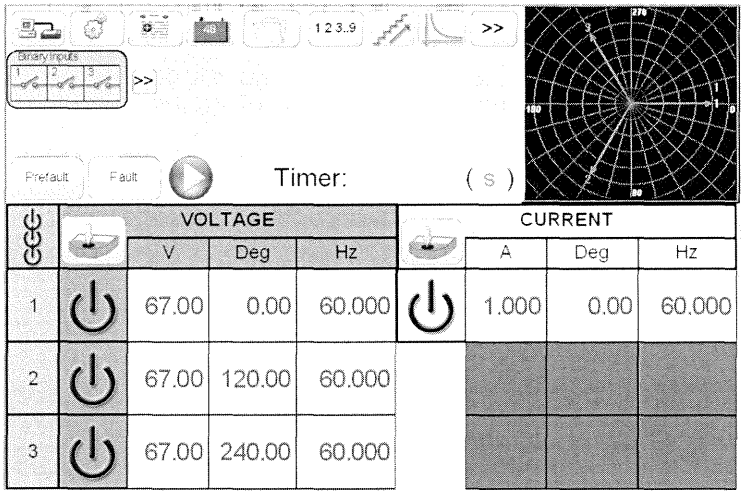

	VOLTAGE			CURRENT		
	V	Deg	Hz	A	Deg	Hz
1	67.00	0.00	60.000	1.000	0.00	60.000
2	67.00	120.00	60.000			
3	67.00	240.00	60.000			

Figure 102 Manual Test Screen – Single Phase Operation

The STVI will automatically set all three currents in phase with each other and divide the current equally between the three current amplifiers. When setting an output, simply enter the value of the desired output current. For example, for an output of 75 Amperes, enter 75, while each current amplifier will be providing 25 Amperes. The current can also be phase shifted. Simply enter the desired phase angle and all three currents will be phase shifted together.

If two current channels that are to be used in parallel, connect the two current outputs to the load as shown in the following figure.

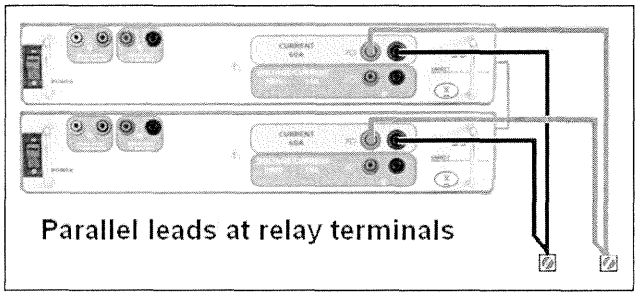

Figure 103 Two Currents in Parallel

Set each channel to one-half of the output requirement. Be sure and reset current channel #2 to 0 degrees so that it will be in-phase with current channel #1. With both current channels selected, turn output on by pressing or clicking on the ALL ON/OFF button. Always use the ALL ON/OFF button to turn both current channels on and off together. For manually ramping outputs, if using the PC version of the STVI software the ⇧⇩ buttons will be displayed. If using an STVI controller the Control Knob icon will be displayed. Pressing either of these two will present the user with a window to select the desired level of increment for manually ramping the outputs, the desired channel(s) to be ramped, and what is to be adjusted (amplitude, phase angle or frequency).

3.2 Currents in Series Operation

Two current channels may be connected in series in order to double the available compliance voltage. High impedance electromechanical ground (earth) overcurrent relays have always been difficult to test at high multiples of tap due to the winding impedance and saturation characteristics. The peak voltage required can exceed the maximum output voltage of one

SMRT1 current output channel, depending on the required test current. By connecting two current outputs in series, the compliance voltage is doubled, providing higher test currents through the load. Connect the two current amplifiers in a "push-push" configuration as shown in the following figure.

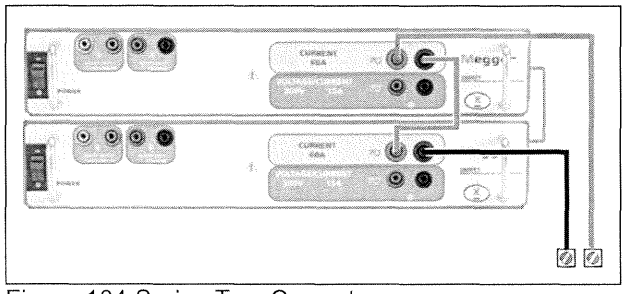

Figure 104 Series Two Currents

Using the STVI or the STVI software on a PC set each of two current channels to the same test current magnitude, and phase angle. Select both current channels and turn output on by pressing or clicking on the ALL ON/OFF button. Always use the ALL ON/OFF button to turn both current channels on and off together. For manually ramping outputs, if using the PC version of the STVI software the ⇧⇩ buttons will be displayed. If using an STVI controller the Control Knob icon will be displayed. Pressing either of these two will present the user with a window to select the desired level of increment for manually ramping the outputs, the desired channel(s) to be ramped, and what is to be adjusted (amplitude, phase angle or frequency).

4.0 **Voltage Sources**

4.1 Outputs Summed Together

Two voltage channels may be used to sum the voltage outputs to obtain higher than rated voltage provided the load is ungrounded. Connect the load between the voltage channel posts, set V_1 Phase to 0° and set V_2 Phase to 180°. The voltage outputs will add so the total voltage is the sum of the two voltage amplitudes, V_1 and V_2 as can be seen in the picture below.

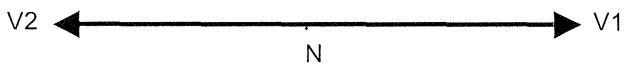

Connect the associated voltage channels black common returns together, when series operation is required (see the following figure). DO NOT attempt to series more than two voltage channels together since the test leads are rated up to maximum of 600 Volts.

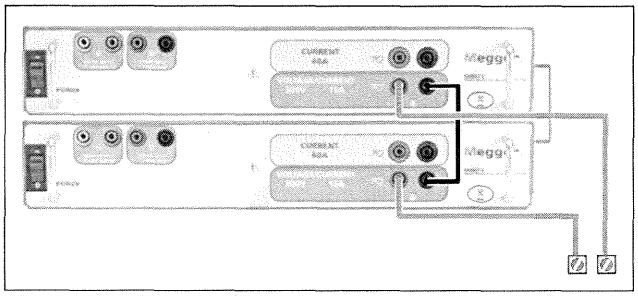

Figure 105 Series of Voltage Channels

4.2 3Ø, 3-Wire, Open-Delta and T-Connection

4.2.1 Balanced Open Delta

Two methods of obtaining a three-phase, three-wire voltage source are available. The Open-Delta configuration is the easier to use when a balanced three-phase source is required because the amplitude and phase relationship can be set directly. No calculations are necessary.

When using the Open-Delta configuration, it is suggested to use voltage channel #1, designated V_1, and voltage channel #2, designated V_2, while the COMMON binding post is designated V_g. With this arrangement, the magnitude and phase angle of the potentials can be easily calculated and set. For the balanced three-phase condition V_{1g} and V_{2g} are equal in magnitude and separated by an angle of 60°. This is done by setting the V_1 and V_2 potentials equal in magnitude, setting 0° on V_1 and 300° (60 degrees leading assuming that the default phase rotation is set to 360 Lag) on V_2, see the following figures.

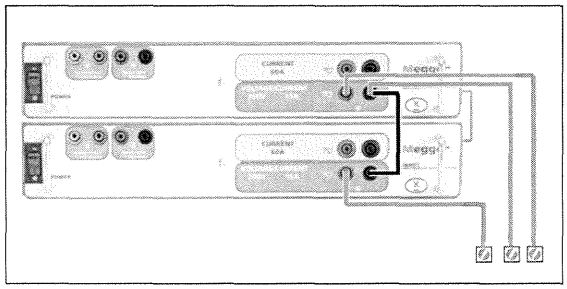

Figure 106 Three Phase Open Delta Connections

When using the Open-Delta Configuration to set up a phase-to-phase fault, calculations' using the Law of Cosines is required to calculate amplitude and phase relationships. (See discussion under T-Connection for simulating unbalanced, phase-to-phase faults without need for calculations.)

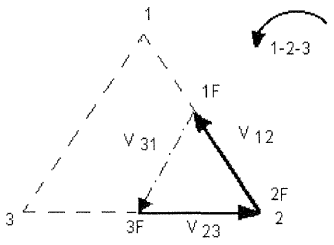

Balanced 3q - Open Delta Connection
If V_f equals the desired test potential, then:
Set $V_1 = V_f \angle 0°$
Set $V_2 = V_f \angle 300°$ Lagging (60° Leading)

4.2.1.1 Unbalanced Open Delta

When setting up an Unbalanced Open-Delta configuration, the desired phase-to-phase fault voltage, V_{1f} is set using voltage channel #1 with its phase angle set to 0°. Phase-to-phase voltage V_{2f} and its phase angle relationship for voltage channel #2, must be calculated using the Law of Cosines; where For any triangle the following formula applies:

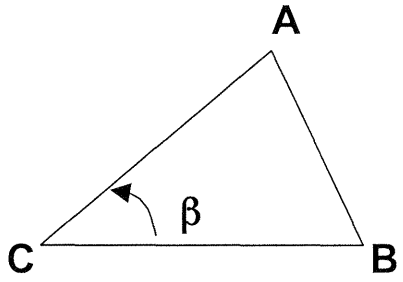

$$AB^2 = AC^2 + BC^2 - 2 \times AB \times BC \times \cos ß.$$

The next figure shows the phase relationships between voltages and an example of the necessary calculation. For convenience the amplitude and the phase angle settings for the typical V_f fault magnitudes are tabulated.

From the Law of Cosines

$$\theta = \arccos\left(\frac{V_{12}}{2 * V_{23}}\right)$$

$$V_{23}^2 = \left(\frac{V_{12}}{2}\right)^2 + \left(\frac{\sqrt{3}}{2} * 120\right)^2$$

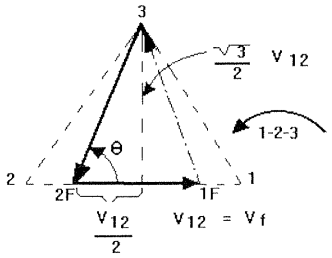

Figure 107 Open-Delta Unbalanced phase-to-phase Fault Voltages

Settings for Typical Phase-to-Phase Fault Voltages

$V_{12} = V_{fault}$

V_{12}	1	5	10	15	20	25	30	35	40	45	50	55	60	65	70
V_{23}	104	104	104	104	104	105	105	105	106	106	106	108	108	109	110
At θ° Lag	270	271	273	274	275	277	278	280	281	282	284	285	286	287	289

4.2.2 T Connection

The second method of obtaining a three-phase, three-wire voltage source is the so-called T-Connection. The method, shown in the following figure, is easier to use when obtaining an unbalanced, phase - to -phase fault simulation since it eliminates calculations. To reduce confusion when using the T-Connection, the voltage output #1 is designated V_a and its phase angle set at 0°, voltage output #2 is designated V_b and its phase angle set for 180°, and voltage output #3 is designated V_c and its phase angle is set for 270. Any combination of balanced three phase faults or unbalanced phase-to-phase fault conditions can be easily simulated. The following figure indicates these phase relationships.

[!] NOTE: This method should not be used for very low fault voltages, or used on solid state relays that may be sensitive to this type of connection (i.e. 5 volts or less, or for testing ABB or Westinghouse type SKD relays).

$$V_f = \textit{Desired Fault Voltage}$$

$$V_a = \frac{1}{2}V_f \angle 0°$$

$$V_b = \frac{1}{2}V_f \angle 180°$$

$$V_c = \frac{\sqrt{3}}{2}\,120 \text{ or } V_c = 104V \angle 270°$$

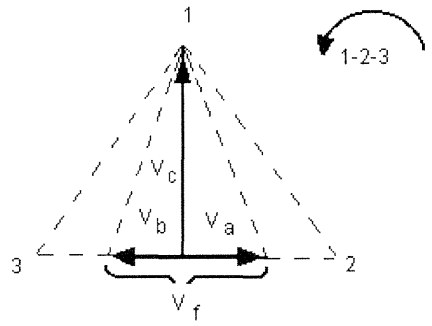

Balanced or Unbalanced Fault T-Connection

4.3 3Ø, 4-Wire, Y-Connection

A three-phase, four-wire potential system can be provided using three output modules. The vector relationships are referenced below. This Y-Connection has the advantage of being able to supply a higher line-to-line voltage (1.73 x phase-to-neutral voltage). It is ideally suited for simulating phase-to-ground faults. Voltage channel #1 is designated as V_a with its phase relationship set for 0°. Voltage channel #2 is then designated as V_b and phase angle set for 120°. Finally, voltage channel #3 is designated V_c and phase angle set for 240° (for a 1-2-3 counter clockwise rotation). V_a, V_b and V_c are connected to the voltage potential binding posts on the respective test sets.

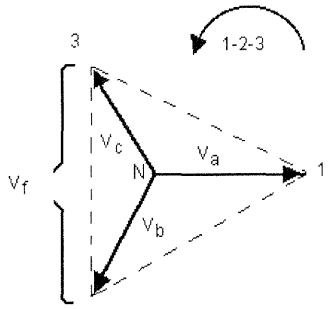

Balanced 3 q, 4 Wire Y-Connection

$$V_f = \textit{Desired Fault Voltage}$$

$$V_a = \frac{\sqrt{3}}{3} V_f \angle 0°$$

$$V_b = \frac{\sqrt{3}}{3} V_f \angle 120°$$

$$V_c = \frac{\sqrt{3}}{3} V_f \angle 240°$$

If using the optional sleeved multi-lead voltage test leads (part number 2001-395), all of the black return leads are interconnected together inside the sleeve so they will all share the return together. Therefore, only one return lead is provided on the relay connection side of the sleeved leads (similar to the connections in the following figure).

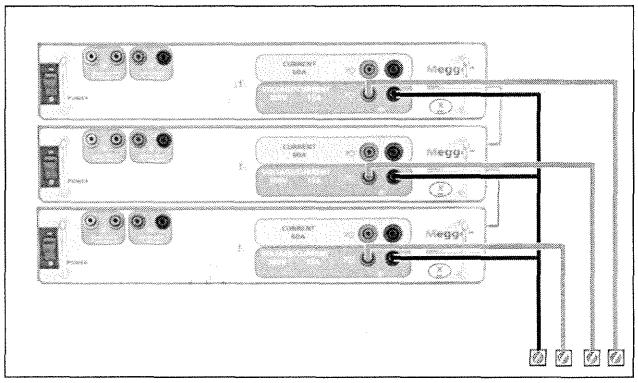

Figure 108 Three Phase Four Wire Voltage Test Connections

4.0 Updating SMRT1 Firmware

Download Firmware Upgrade via Megger Website

To download the newest firmware from the Megger website,

7. Go to WWW.Megger.com
8. **Log In**.
9. Go to **Software Downloads**
10. Click on **SMRT**
11. You will see instructions to enter the serial number of the SMRT unit, and then click on **Continue**. The serial number is 12 digits long. Make sure you enter all 12 digits. Then click on **Firmware Version #.##**. The firmware will be downloaded onto your PC as a zip file. Unzip the file, **Select All** files, and **Copy** to a USB memory stick[5] (use a 2 GB or smaller stick), or create a file on your PC for storage to unzip or extract to a file.

Firmware Upgrade via STVI USB Port

Download the firmware to your PC from the Megger website as outlined above, see Firmware Upgrade via Megger Website. Unzip the file, **Select All** files, and **Copy** to a USB memory stick. Interconnect the STVI to the SMRT unit via the Ethernet cable, and power up the test system. Then insert the USB stick into the USB port on the top of the STVI. To perform the upgrade, from the STVI **Configuration Screen** press the **Update Firmware** button. The SMRT1 will automatically look to see if the firmware is a newer version of Software /Firmware, and if it is, it will automatically download the firmware into the unit.

5.0 Warranty Statement

Megger warrants the product is free of defects in material and workmanship for a period of one (1) year from date of shipment. This warranty is non-transferable. This warranty is limited and shall not apply to equipment that has damage, or cause of defect, due to accident, negligence, and improper operation, faulty installation by the purchaser, or improper service or repair by any person, company or corporation not authorized by Megger. Megger will, at its' option, either repair or replace those parts and/or materials it deems to be defective.

The warranty is in lieu of all other warranties, either expressed or implied on the part of Megger and in no event shall Megger be liable for the consequential damages due to the breach thereof.

5.1 Preventive Maintenance

The unit utilizes surface mount technology (SMT) and other components which require little or no service except for routine cleaning, etc. The unit should be serviced in a clean atmosphere away from energized electrical circuits.

---

[5] You can use the STVI USB port to update the SMRT firmware using a memory stick (2 GB or ***smaller***) with the firmware on it. The STVI USB port does not support memory sticks larger than 2 GB.

5.1.1 Examine the unit every six months for:

Dust and Dirt	To clean the unit, disconnect the power cord from the unit. Never use spray liquids or industrial cleaners. Some cleaning solvents can damage electrical components, and should never be used. Water and a mild soap may be used. Use a lightly damp cloth (not dripping wet) to wipe off the unit. A dirty heat sink can cause thermal overloads. Remove dust with dry, low pressure, compressed air. Either remove the enclosure or simply apply air forcing the dust away from the heat sink through the sides of the unit.
Moisture	Remove moisture as much as possible by putting the test set in a warm, dry environment.

5.3 Service and Repair Instructions

Basic troubleshooting information has been provided to guide the technician to the possible source of a problem.

Since SMRT1 uses Surface Mount Technology, most repairs are beyond the scope of the basic troubleshooting guide, and should be referred to the Service Department at Megger or handled through the Megger Representative.

If the unit is still within the original warranty period, or limited warranty period following factory servicing, **the factory must be contacted before attempting any repairs or the warranty will be void.**

5.3.1 Basic Troubleshooting

The troubleshooting information relies on the technician to have a good understanding of the operation of the unit. If the technician is unfamiliar with the unit, he or she should not attempt to repair. The technician should contact the factory before attempting repairs. Provide the Megger part number for the part or assembly in question and the serial number of the SMRT1 when making inquiries.

WARNING It is necessary to energize the SMRT1 to properly troubleshoot. The technician must take all applicable safety precautions for working near energized circuits.

NOTES

Before suspecting a failure in the SMRT1, review the General Description and Operation sections to ensure that the problem is not a result of operating error.

Preliminary testing of the SMRT1 within its specified limits can help determine if a malfunction actually exists, identify the type of malfunction and define the general area of the failure.

Common causes of malfunctions, other than improper operation, are incorrect power input (voltage above or below specified limits), incorrect test signal voltages applied to the Binary Input gate (outside of the specified AC/DC Applied/Removed limits), and contact or circuit resistance too great for the Dry Contact gates to operate properly on the

Monitor/Start/Stop gate. Typical malfunctions for the VI-Gen amplifiers are external short circuits on the voltage output and open circuits on the current output. VI-Gen voltage and current outputs can be easily checked using a voltmeter and ammeter.

NOTE: Proper ESD procedures should be followed when handling any SMRT1 VIGEN outside of the protective enclosure. Failure to do so, may damage sensitive parts.

5.3.1.1 Power Input

Input voltage affects the whole unit and may or may not cause permanent damage if voltage is incorrect. These problems can often be corrected by simply using a better source of input power. The rated voltage limit is auto-selectable from 100 to 240 volts, ± 10 %, 47 to 63 Hz.

Some symptoms are as follows:

1. Low voltage: Erratic operation, no output, input power circuit breaker operation.

2. High voltage: Circuit breaker operation, power supply failure in Input Power Module.

5.3.1.2 VIGEN Input Power and Control

Basic troubleshooting of the input power is as follows.

No power: Check the ON/OFF circuit breaker. Does the ON/OFF switch light up? If it does not light up, then power is not getting to the unit. Check power source and line cord. If it lights up then the power is getting to the unit. Check the VIGEN internal power cable connections.

⚠ To check the internal connections requires the removal of the enclosure cover and the Warranty Sticker. If the unit is still in the warranty period, stop and contact your local Megger Sales office or representative. If in warranty, do not remove the sticker without written approval from Megger. Removing the warranty sticker without written approval may void the warranty.

Step 1 Disconnect the power cord from the unit, and remove top corner screws.

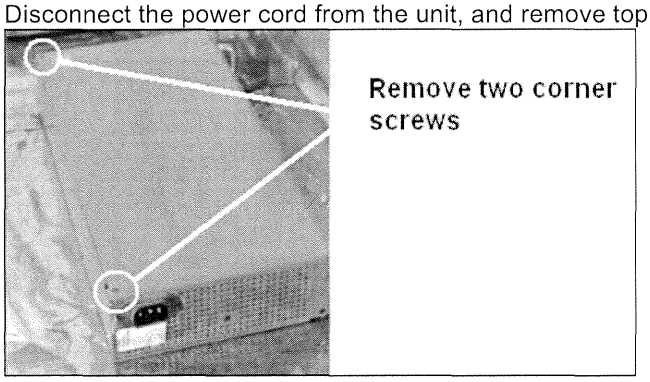

Step 2

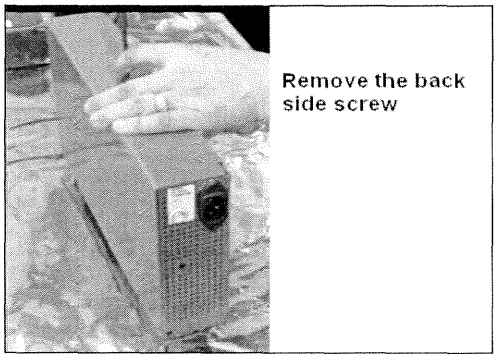

Step 3

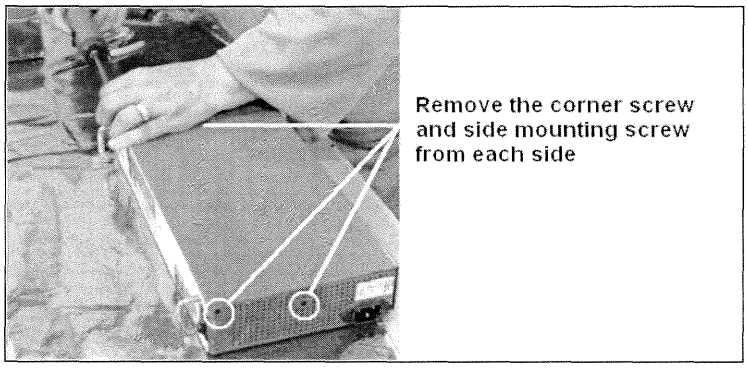

Step 4

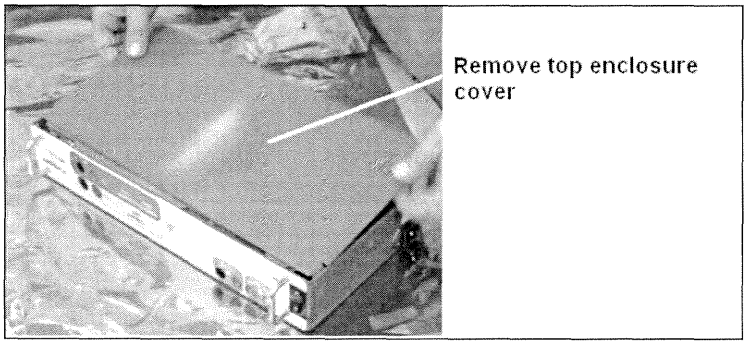

⚠

CAUTION: From this point on observe proper ESD procedures. Be careful when moving the VIGEN module as it is a tight fit, and it is possible to damage components upon extraction from or installation to the bottom half of the enclosure.

Step 5

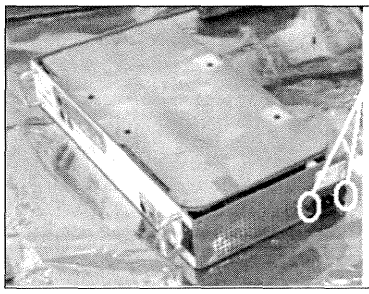

Remove two screws that secure the power input receptacle

Step 6

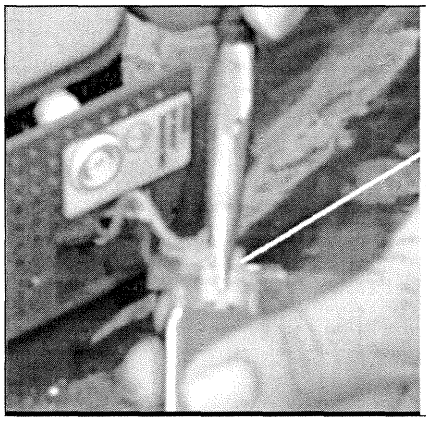

Disconnect the connectors to the power receptacle. Take note of the color coded wires and the appropriate connectors.

Step 7

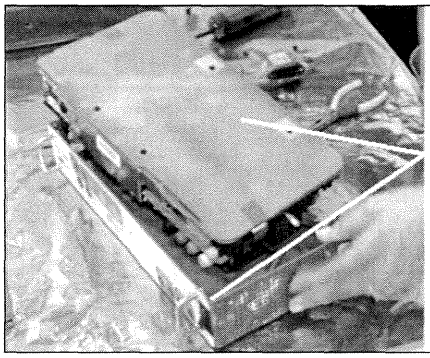

Carefully remove the VIGEN from the enclosure shell enough to gain access to the power ON/OFF switch and Ground post connection points

Step 8

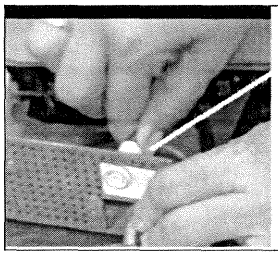

Disconnect the ground and power on off switch connectors

Step 9

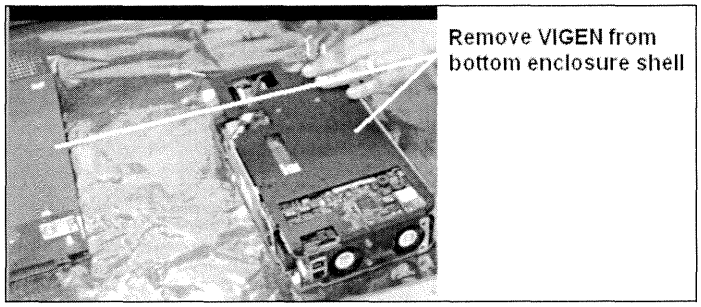

Step 10 Inspect the AC power connector

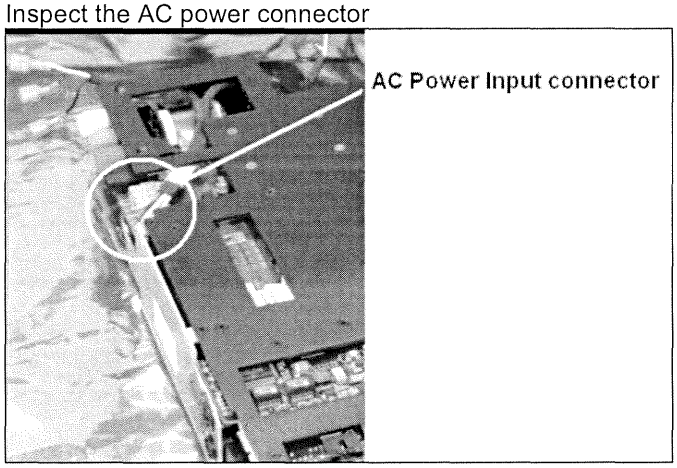

Look for possible discoloring of the wires and connector indicating overheating. Make a general observation of the VIGEN module looking for any obvious damage caused by a short circuit or other possible signs of trouble.

5.3.1.3 Binary Input and Binary Output

If all the items external of the unit are in proper order, then the problem exists within the Binary Input / Output assembly itself.

Some basic troubleshooting can pinpoint problems to the approximate cause.

Binary Input - Basic troubleshooting is as follows:

2. Timer does not stop:
   Jumper the Binary Input terminals manually. If LED above the input lights, check the Binary Input setup screen to verify that the selected binary input is properly setup as a Timer stop post. Check Timer stop settings as N.O. (Normally Open) to close, and Latch On. If LED does not light up, the Binary Input will need to be repaired or replaced.

2. Counting errors:
   AC applied or removed Stop signals can create, what appears to be poor repeatability, an inaccuracy or a malfunction in the Timer. The lower the voltage level, the more serious the "error" will be. What appears to be an error, however,

is actually a variation in the point on the sine wave at which the voltage is great enough to cause the gate circuit to operate. If the circuit used for the timing test has a low AC voltage and the point at which the contact in the test circuit opens or closes, is at or close to zero on the sine wave, the period of time before the voltage level will be high enough to trigger the gate circuit can be as much as 4 milliseconds. The total timing variation can be as much as 8 milliseconds. The shorter the duration of the timing test, the more significant the variation becomes. Therefore, if small timing variations would present a problem, it is recommended that an AC voltage of 115 volts or above or a DC voltage be used for voltage applied/removed test selections.

When the SMRT1 Timer calibration is being tested, the AC voltage variable is often overlooked. This is particularly true when the Timer is compared to a counter and the two are triggered simultaneously with an electronic switch. For best results, a DC voltage should be used to eliminate the variable. If testing the AC voltage Timer Stop characteristics is desired, then the Stop signal must be triggered at the same point on the sine wave to assure that the gate signal will be repeatable. Ideally, the signal should be at a point near peak in the positive direction. In addition, the specified rms AC voltage values for the various Stop control selections must be adhered to.

Another source of apparent "error" can be the programmable de-bounce feature. If using electro-mechanical contacts for stopping the Timer, and if those contacts have a tendency to bounce, there could be a difference between an external standard timer and the SMRT1 Timer, depending on the programmed de-bounce period set in the SMRT unit. To determine the programmed value, look at the Binary Input Setup Screen and see what the De-bounce setting value is.

If a timing error or variation persists after all the suspected causes of error have been eliminated, then it is possible that the Binary Input circuit is malfunctioning. Contact factory for return instructions.

Binary Output - Basic troubleshooting is as follows:

Binary Output LED is ON but output contacts ***not closed***:
Using a continuity tester check to see if output circuit is open circuited. If circuit is open then it is possible that the internal surface mounted fuse element has been blown. Note: an optional in-line fused test lead Part Number: 568026 are available to provide protection from switching too high current, see SMRT Ordering Information under Optional Additional Accessories. The unit will need to be returned to the factory for further inspection and repair.

Contact the factory for a Repair Authorization Number and return instructions if service is required. A Repair Authorization (RA) number will be assigned for proper handling of the unit when it arrives at the factory. Any non-warranty repair cost incurred for the repair or replacement of parts and/or materials shall be the responsibility of the purchaser.

Provide the factory with model number, Unit serial number, serial number of VI-Gen if appropriate, nature of the problem or service, return address, your name, and how to contact you should the factory need to discuss the service request.

You may need to provide a purchase order number, cost limit, billing, and return shipping instructions. If an estimate is requested, provide the name and contact information.

6.1 Preparation for Reshipment

! Save the original shipping container for future use. The shipping container is designed to withstand the rigors of shipping via a common commercial carrier. For example, you may wish to reship your unit to Megger for an annual calibration recertification.

Pack the equipment appropriately to prevent damage during shipment. If a reusable container is utilized, the unit will be returned in the same shipping container if it is in suitable condition.

Add the Return Authorization Number to the address label of the shipping container for proper identification and quicker handling.

! NOTE: Ship the equipment without nonessential items such as test leads, etc. These items are not needed by the factory to perform service.